AUTHENTICATED
U.S. GOVERNMENT
INFORMATION
GPO

Federal Register

7–30–03 Wednesday
Vol. 68 No. 146 July 30, 2003

Pages 44609–44856

The **FEDERAL REGISTER** (ISSN 0097–6326) is published daily, Monday through Friday, except official holidays, by the Office of the Federal Register, National Archives and Records Administration, Washington, DC 20408, under the Federal Register Act (44 U.S.C. Ch. 15) and the regulations of the Administrative Committee of the Federal Register (1 CFR Ch. I). The Superintendent of Documents, U.S. Government Printing Office, Washington, DC 20402 is the exclusive distributor of the official edition. Periodicals postage is paid at Washington, DC.

The **FEDERAL REGISTER** provides a uniform system for making available to the public regulations and legal notices issued by Federal agencies. These include Presidential proclamations and Executive Orders, Federal agency documents having general applicability and legal effect, documents required to be published by act of Congress, and other Federal agency documents of public interest.

Documents are on file for public inspection in the Office of the Federal Register the day before they are published, unless the issuing agency requests earlier filing. For a list of documents currently on file for public inspection, see *http://www.nara.gov/fedreg.*

The seal of the National Archives and Records Administration authenticates the Federal Register as the official serial publication established under the Federal Register Act. Under 44 U.S.C. 1507, the contents of the **Federal Register** shall be judicially noticed.

The **Federal Register** is published in paper and on 24x microfiche. It is also available online at no charge as one of the databases on GPO Access, a service of the U.S. Government Printing Office.

The online edition of the **Federal Register** *www.access.gpo.gov/nara,* available through GPO Access, is issued under the authority of the Administrative Committee of the Federal Register as the official legal equivalent of the paper and microfiche editions (44 U.S.C. 4101 and 1 CFR 5.10). It is updated by 6 a.m. each day the **Federal Register** is published and includes both text and graphics from Volume 59, Number 1 (January 2, 1994) forward.

For more information about GPO Access, contact the GPO Access User Support Team, call toll free 1-888-293-6498; DC area 202-512-1530; fax at 202-512-1262; or via email at *gpoaccess@gpo.gov.* The Support Team is available between 7:00 a.m. and 5:30 p.m. Eastern Time, Monday–Friday, except official holidays.

The annual subscription price for the **Federal Register** paper edition is $699, or $764 for a combined **Federal Register, Federal Register** Index and List of CFR Sections Affected (LSA) subscription; the microfiche edition of the **Federal Register** including the **Federal Register** Index and LSA is $264. Six month subscriptions are available for one-half the annual rate. The charge for individual copies in paper form is $10.00 for each issue, or $10.00 for each group of pages as actually bound; or $2.00 for each issue in microfiche form. All prices include regular domestic postage and handling. International customers please add 40% for foreign handling. Remit check or money order, made payable to the Superintendent of Documents, or charge to your GPO Deposit Account, VISA, MasterCard, American Express, or Discover. Mail to: New Orders, Superintendent of Documents, P.O. Box 371954, Pittsburgh, PA 15250-7954; or call toll free 1-866-512-1800, DC area 202-512-1800; or go to the U.S. Government Online Bookstore site, *bookstore@gpo.gov.*

There are no restrictions on the republication of material appearing in the **Federal Register.**

How To Cite This Publication: Use the volume number and the page number. Example: 68 FR 12345.

Postmaster: Send address changes to the Superintendent of Documents, Federal Register, U.S. Government Printing Office, Washington DC 20402, along with the entire mailing label from the last issue received.

SUBSCRIPTIONS AND COPIES

PUBLIC	
Subscriptions:	
Paper or fiche	**202–512–1800**
Assistance with public subscriptions	**202–512–1806**
General online information	**202–512–1530; 1–888–293–6498**
Single copies/back copies:	
Paper or fiche	**202–512–1800**
Assistance with public single copies	**1–866–512–1800 (Toll-Free)**
FEDERAL AGENCIES	
Subscriptions:	
Paper or fiche	**202–741–6005**
Assistance with Federal agency subscriptions	**202–741–6005**

What's NEW!

Federal Register Table of Contents via e-mail

Subscribe to FEDREGTOC, to receive the **Federal Register** Table of Contents in your e-mail every day.

If you get the HTML version, you can click directly to any document in the issue.

To subscribe, go to **http://listserv.access.gpo.gov** and select:

Online mailing list archives
FEDREGTOC-L
Join or leave the list

Then follow the instructions.

Printed on recycled paper.

Contents

Federal Register

Vol. 68, No. 146

Wednesday, July 30, 2003

Agriculture Department
See Federal Crop Insurance Corporation
See Forest Service
See Rural Housing Service

Alcohol, Tobacco, Firearms, and Explosives Bureau
NOTICES
Agency information collection activities; proposals, submissions, and approvals, 44815

Arctic Research Commission
NOTICES
Meetings; Sunshine Act, 44738

Census Bureau
NOTICES
Agency information collection activities; proposals, submissions, and approvals, 44738–44739

Citizenship and Immigration Services Bureau
NOTICES
Immigration:
Permit to reenter U.S. and refugee travel document; Forms I-327 and I-571 redesign, 44805–44806

Civil Rights Commission
NOTICES
Meetings; State advisory committees:
Alabama and Louisiana, and various States [**Editorial Note:** These two documents, published at 68 FR 44522 44523 in the **Federal Register** of Tuesday, July 29, 2003, were incorrectly listed under ''Meetings; Sunshine Act.'']

Coast Guard
RULES
Ports and waterways safety:
Upper Mississippi River—
Cape Girardeau, MO; safety zone, 44618–44620
PROPOSED RULES
Pollution:
Mandatory ballast water management program for U.S. waters, 44691–44696
Ports and waterways safety:
Eighth Coast Guard District inland rivers; barges loaded with dangerous cargoes; reporting requirements; regulated navigation area, 44696–44706
Illinois Waterway System within Ninth Coast Guard District; barges loaded with dangerous cargoes; reporting requirements; regulated navigation area, 44706–44714
NOTICES
Maritime operations, etc.:
Brazos River waterway, TX; suitability for liquefied hazardous or natural gas marine traffic; recommendation letter, 44806–44807

Commerce Department
See Census Bureau
See Economic Development Administration
See Industry and Security Bureau
See International Trade Administration
See National Oceanic and Atmospheric Administration

Committee for the Implementation of Textile Agreements
NOTICES
Cotton, wool, and man-made textiles:
Guatemala, 44747
Mexico, 44747–44748
Vietnam, 44748–44751

Defense Department
NOTICES
Agency information collection activities; proposals, submissions, and approvals, 44751–44752

Economic Development Administration
NOTICES
Trade adjustment assistance eligibility determination petitions:
K&S Optics, Inc., et al., 44739–44740

Education Department
NOTICES
Grants and cooperative agreements; availability, etc.:
Special education and rehabilitative services—
Children with Disabilities Technical Assistance and Dissemination to Improve Services and Results Program, 44753–44756
Disability and Rehabilitation Research Projects and Centers Program, 44752–44753

Energy Department
See Energy Information Administration
NOTICES
Meetings:
Advanced Scientific Computing Advisory Committee, 44756–44757
Environmental Management Site-Specific Advisory Board—
Paducah Gaseous Diffusion Plant, KY, 44757

Energy Information Administration
NOTICES
Agency information collection activities; proposals, submissions, and approvals, 44757–44758

Environmental Protection Agency
RULES
Air quality implementation plans:
Preparation, adoption, and submittal—
Prevention of significant deterioration and non-attainment new source review; reconsideration, 44620–44631
Air quality implementation plans; approval and promulgation; various States:
Texas, 44631–44635
Pesticides; tolerances in food, animal feeds, and raw agricultural commodities:
Bacillus subtilis var. amyloliquefaciens (strain FZB24), 44635–44640
Boscalid, 44640–44651
Solid wastes:
Hazardous waste; identification and listing—
Exclusions, 44652–44659

Recycled used oil management standards, 44659–44665
PROPOSED RULES
Air quality implementation plans; approval and promulgation; various States; air quality planning purposes; designation of areas:
Idaho, 44715–44722
Air quality implementation plans; approval and promulgation; various States:
Texas, 44714–44715
NOTICES
Committees; establishment, renewal, termination, etc.:
Science Advisory Board, 44758–44762
Confidential business information and data transfer, 44762–44763
Meetings:
Environmental Policy and Technology National Advisory Council, 44763–44766
Science Advisory Board, 44766–44767
Pesticide, food, and feed additive petitions:
AgriVir, LLC, 44780–44784
Pesticide registration, cancellation, etc.:
Reregistration performance measures and goals, 44767–44776
Valent BioSciences Corp., 44777–44780
Reports and guidance documents; availability, etc.:
Polychlorinated dioxins, furans, and biphenyls; toxicity equivalence methodology; framework for application in ecological risk assessment, 44784–44785
Superfund; response and remedial actions, proposed settlements, etc.:
Lexington County Landfill Site, SC, 44785
Sybill Used Oil Processing Plant Site, MI, 44785

Executive Office of the President
See Presidential Documents

Federal Aviation Administration
RULES
Airworthiness directives:
Honeywell International Inc., 44609–44610
Rolls-Royce plc, 44610–44611
IFR altitudes, 44611–44613
PROPOSED RULES
Airworthiness directives:
Rolls-Royce plc, 44672–44675
NOTICES
Advisory circulars; availability, etc.:
Turbine engine continued rotation and rotor locking, 44833
Agency information collection activities; proposals, submissions, and approvals, 44833–44834
Environmental statements; notice of intent:
Philadelphia International Airport Runway 17-35 Extension Project, 44834–44835
Philadelphia International Airport Runway Capacity Enhancement Program, 44835–44836
Technical standard orders:
Rotorcraft, transport airplane, etc., airplane seating systems; installation instructions and limitations standardized content and format; policy statement, 44836

Federal Communications Commission
NOTICES
Common carrier services:
Wireless telecommunications services—
Regional narrowband PCS licenses auction; notice and filing requirements, minimum opening bids, etc., 44785–44798

Federal Crop Insurance Corporation
PROPOSED RULES
Crop insurance regulations:
Blueberries, 44668–44672

Federal Maritime Commission
NOTICES
Agreements filed, etc., 44798

Federal Motor Carrier Safety Administration
NOTICES
Motor carrier safety standards:
Driver qualifications—
Anderson, Roger D., et al.; vision requirement exemptions, 44837–44838

Federal Reserve System
NOTICES
Banks and bank holding companies:
Permissible nonbanking activities, 44798
Meetings; Sunshine Act, 44798–44799

Fish and Wildlife Service
NOTICES
Endangered and threatened species:
Recovery plans—
Sierra Nevada bighorn sheep, 44808
Endangered and threatened species permit applications, 44807
Environmental statements; availability, etc.:
Yampa River Basin, CO and WY; endangered fishes management plan, 44808–44809
Marine mammal permit applications, 44809–44810

Food and Drug Administration
PROPOSED RULES
Biological products:
Blood and blood components, including source plasma; labeling and storage requirements; revisions, 44678–44688

Forest Service
NOTICES
Meetings:
Resource Advisory Committees—
Tuolumne County, 44729

General Services Administration
NOTICES
Federal Management Regulation:
Federal buildings redesignations, 44799

Health and Human Services Department
See Children and Families Administration
See Food and Drug Administration
See Health Resources and Services Administration
See National Institutes of Health

Health Resources and Services Administration
NOTICES
Grants and cooperative agreements; availability, etc.:
Health center network planning and development, 44799–44802

Homeland Security Department
See Citizenship and Immigration Services Bureau
See Coast Guard

Housing and Urban Development Department
NOTICES
FHA programs; introduction:
Tax credit proceeds distribution, 44843–44845

Indian Affairs Bureau
RULES
Law and order on Indian reservations:
Paiute-Shoshone Indian Tribe of Fallon Reservation and Colony, NV; Court of Indian Offenses removed, 44614–44616

Industry and Security Bureau
NOTICES
Export privileges, actions affecting:
Talyi, Yaudat Mustafa, et al., 44740–44741

Interior Department
See Fish and Wildlife Service
See Indian Affairs Bureau
See Land Management Bureau
See Reclamation Bureau

Internal Revenue Service
RULES
Income taxes:
Dual consolidated losses; recapture events, 44616–44618
PROPOSED RULES
Income taxes:
Separate return limitation years; loss carryovers waiver; cross-reference
Hearing cancellation, 44689
Variable annuity, endowment, and life insurance contracts; diversification requirements, 44689–44691
NOTICES
Health Insurance Portability and Accountability Act of 1996; implementation:
Expatriation; individuals losing United States citizenship; quarterly listing, 44840–44841
Meetings:
Taxpayer Advocacy Panels, 44841–44842

International Trade Administration
NOTICES
Antidumping:
Non-frozen apple juice concentrate from—
China, 44741–44744
Countervailing duties:
Hot-rolled carbon steel flat products from—
India, 44744–44745

International Trade Commission
NOTICES
Import investigations:
Breath test systems for detection of gastrointestinal disorders and components, 44812–44813

Justice Department
See Alcohol, Tobacco, Firearms, and Explosives Bureau
NOTICES
Agency information collection activities; proposals, submissions, and approvals, 44813–44815

Labor Department
See Occupational Safety and Health Administration
NOTICES
Grants and cooperative agreements; availability, etc.:
Columbian Trade Union Training Program; correction, 44815
Serbian labor inspectorate for 21st century; correction, 44816

Land Management Bureau
NOTICES
Agency information collection activities; proposals, submissions, and approvals, 44810–44811

National Aeronautics and Space Administration
NOTICES
Meetings:
Advisory Council
Biological and Physical Research Advisory Committee, 44818–44819
Patent licenses; non-exclusive, exclusive, or partially exclusive:
Keymaster Technologies, Inc., 44819
Reports and guidance documents; availability, etc.:
Martian samples returned to Earth; possible biohazards detection; test protocol, 44819

National Institutes of Health
NOTICES
Meetings:
National Center for Research Resources, 44802
National Heart, Lung, and Blood Institute, 44802
National Institute of Mental Health, 44803
National Institute on Alcohol Abuse and Alcoholism, 44802–44803
Scientific Review Center, 44803–44804
Patent licenses; non-exclusive, exclusive, or partially exclusive:
LI-COR, Inc., 44804–44805

National Oceanic and Atmospheric Administration
RULES
Fishery conservation and management:
Alaska; fisheries of Exclusive Economic Zone—
Pacific cod, 44666–44667
Sablefish, 44665–44666
PROPOSED RULES
Endangered and threatened species:
Sea turtle conservation requirements—
Gulf of Mexico and Atlantic Ocean; turtle excluder devices, 44722–44728
NOTICES
Permits:
Exempted fishing, 44745–44747

National Science Foundation
NOTICES
Reports and guidance documents; availability, etc.:
Antarctica; meterorites collection plan, 44819–44820

Nuclear Regulatory Commission
PROPOSED RULES
Production and utilization facilities; domestic licensing:
Risk-informed categorization and treatment of structures, systems, and components for nuclear power reactors, 44672
NOTICES
Meetings; Sunshine Act, 44820
Reports and guidance documents; availability, etc.:
Wisconsin; regulatory agreement with NRC, 44820–44822

Occupational Safety and Health Administration
NOTICES
Agency information collection activities; proposals, submissions, and approvals, 44816–44818

Presidential Documents
PROCLAMATIONS
Special observances:
Parents' Day (Proc. 7693), 44847–44850
EXECUTIVE ORDERS
Burma; blocking Government property and prohibiting certain transactions (EO 13310), 44853–44856
Committees; establishment, renewal, termination, etc.:
President's Committee on Mental Retardation; renaming and renewal (EO 13309), 44851

Reclamation Bureau
NOTICES
Environmental statements; notice of intent:
Sacramento River Water Reliability Study, CA, 44811–44812

Research and Special Programs Administration
NOTICES
Hazardous materials transportation:
Safety advisories—
Compressed gas cylinders; unauthorized marking, 44838–44839

Rural Housing Service
NOTICES
Grants and cooperative agreements; availability, etc.:
Rural Community Development Initiative, 44729–44738

Securities and Exchange Commission
NOTICES
Agency information collection activities; proposals, submissions, and approvals, 44822
Self-regulatory organizations; proposed rule changes:
American Stock Exchange LLC, 44823–44824
Depository Trust Co., 44824–44825
Government Securities Clearing Corp., 44825–44826
National Association of Securities Dealers, Inc., 44826–44831
Applications, hearings, determinations, etc.:
Public utility holding company filings, 44822

State Department
RULES
International Traffic in Arms regulations:
Rwanda; partial lifting of embargo, 44613–44614
NOTICES
Art objects; importation for exhibition:
Circle of Bliss: Buddhist Meditational Art, 44831
El Greco, 44831
Heart of Spain, 44831
Grants and cooperative agreements; availability, etc.:
U.S.-Egypt Science and Technology Program, 44832
Nonproliferation measures imposition:
Chinese entity, 44832–44833
Presidential permits:
Maine Transportation Department; international bridge between Calais, ME and St. Stephen, New Brunswick, Canada; construction, operation, and maintenance, 44833

Surface Transportation Board
NOTICES
Railroad services abandonment:
Soo Line Railroad Co., 44839

Textile Agreements Implementation Committee
See Committee for the Implementation of Textile Agreements

Transportation Department
See Federal Aviation Administration
See Federal Motor Carrier Safety Administration
See Research and Special Programs Administration
See Surface Transportation Board
PROPOSED RULES
Aviation economic regulations:
Air carrier continuing fitness determinations involving citizenship issue; supporting data, 44675–44678

Treasury Department
See Internal Revenue Service
NOTICES
Agency information collection activities; proposals, submissions, and approvals, 44839–44840

Separate Parts In This Issue

Part II
Housing and Urban Development Department, 44843–44845

Part III
Executive Office of the President, Presidential Documents, 44847–44851, 44853–44856

Reader Aids

Consult the Reader Aids section at the end of this issue for phone numbers, online resources, finding aids, reminders, and notice of recently enacted public laws.

To subscribe to the Federal Register Table of Contents LISTSERV electronic mailing list, go to http://listserv.access.gpo.gov and select Online mailing list archives, FEDREGTOC-L, Join or leave the list (or change settings); then follow the instructions.

CFR PARTS AFFECTED IN THIS ISSUE

A cumulative list of the parts affected this month can be found in the Reader Aids section at the end of this issue.

3 CFR

Proclamations:
7693 44849

Executive Orders:
12994 (Amended by 13309) 44851
13047 (Amended by 13310) 44853
13309 44851
13310 44853

7 CFR

Proposed Rules:
457 44668

10 CFR

Proposed Rules:
50 44672

14 CFR
39 (2 documents) 44609, 44610
95 44611

Proposed Rules:
39 44672
204 44675

21 CFR

Proposed Rules:
600 44678
606 44678
610 44678
640 44678

22 CFR
126 44613

24 CFR
200 44844

25 CFR
11 44614

26 CFR
1 44616
602 44616

Proposed Rules:
1 (2 documents) 44689

33 CFR
165 44618

Proposed Rules:
151 44691
165 (2 documents) 44696, 44706

40 CFR
51 44620
52 (2 documents) 44620, 44631
180 (2 documents) 44635, 44640
261 (2 documents) 44652, 44659
279 44659

Proposed Rules:
52 (2 documents) 44714, 44715
81 44715

50 CFR
679 (2 documents) 44665, 44666

Proposed Rules:
223 44722

Rules and Regulations

Federal Register

Vol. 68, No. 146

Wednesday, July 30, 2003

This section of the FEDERAL REGISTER contains regulatory documents having general applicability and legal effect, most of which are keyed to and codified in the Code of Federal Regulations, which is published under 50 titles pursuant to 44 U.S.C. 1510.

The Code of Federal Regulations is sold by the Superintendent of Documents. Prices of new books are listed in the first FEDERAL REGISTER issue of each week.

DEPARTMENT OF TRANSPORTATION

Federal Aviation Administration

14 CFR Part 39

[Docket No. 2002–NE–42–AD; Amendment 39–13250; AD 2003–15–07]

RIN 2120–AA64

Airworthiness Directives; Honeywell International Inc. (Formerly AlliedSignal) Model RE220 (RJ) Auxiliary Power Units

AGENCY: Federal Aviation Administration, DOT.

ACTION: Final rule.

SUMMARY: This amendment adopts a new airworthiness directive (AD) that is applicable to Honeywell International Inc. (formerly AlliedSignal) model RE220 (RJ) auxiliary power units (APUs) part number (P/N) WE3800770–2. This amendment requires replacing the existing fuel nozzles with new design fuel nozzles, making reidentification updates to the APU identification plate, and operating the APU to perform a visual inspection for fuel leaks. This amendment is prompted by reports received by the FAA of cracks occurring in the existing APU fuel nozzles leading to fuel leaks. The actions specified by the AD are intended to prevent APU compartment fires and fuel vapor explosion.

DATES: Effective September 3, 2003.

ADDRESSES: Information regarding this action may be examined, by appointment, at the Federal Aviation Administration (FAA), New England Region, Office of the Regional Counsel, 12 New England Executive Park, Burlington, MA.

FOR FURTHER INFORMATION CONTACT: Roger Pesuit, Aerospace Engineer, Los Angeles Aircraft Certification Office, FAA, Transport Airplane Directorate, 3960 Paramount Blvd., Lakewood, CA 90712–4137; telephone (562) 627–5251, fax (562) 627–5210.

SUPPLEMENTARY INFORMATION: A proposal to amend part 39 of the Federal Aviation Regulations (14 CFR part 39) to include an AD that is applicable to Honeywell International Inc. (formerly AlliedSignal) Model RE220 (RJ) auxiliary power units was published in the **Federal Register** on January 30, 2003. That action proposed to require replacing the existing fuel nozzles, P/N WE3830486–2, with new design fuel nozzles, P/N WE3830513–1, making reidentification updates to the APU identification plate, and operating the APU to perform a visual inspection for fuel leaks. The FAA also published a related AD, AD 2002–26–07, in the **Federal Register** on January 2, 2003, for Bombardier model CL–600–2C10 airplanes. That AD limits P/N WE3800770–2 APUs that have the old design fuel nozzles to ground operation only, until the new fuel nozzles are installed.

Comments

Interested persons have been afforded an opportunity to participate in the making of this amendment. One commenter approves of the proposal as-written. No comments were received on the the FAA's determination of the cost to the public. The FAA has determined that air safety and the public interest require the adoption of the rule as proposed.

Regulatory Analysis

This final rule does not have federalism implications, as defined in Executive Order 13132, because it would not have a substantial direct effect on the States, on the relationship between the national government and the States, or on the distribution of power and responsibilities among the various levels of government. Accordingly, the FAA has not consulted with state authorities prior to publication of this final rule.

For the reasons discussed above, I certify that this action (1) is not a ''significant regulatory action'' under Executive Order 12866; (2) is not a ''significant rule'' under the DOT Regulatory Policies and Procedures (44 FR 11034, February 26, 1979); and (3) will not have a significant economic impact, positive or negative, on a substantial number of small entities under the criteria of the Regulatory Flexibility Act. A final evaluation has been prepared for this action and it is contained in the Rules Docket. A copy of it may be obtained by contacting the Rules Docket at the location provided under the caption **ADDRESSES.**

List of Subjects in 14 CFR Part 39

Air transportation, Aircraft, Aviation safety, Safety.

Adoption of the Amendment

■ Accordingly, pursuant to the authority delegated to me by the Administrator, the Federal Aviation Administration amends part 39 of the Federal Aviation Regulations (14 CFR part 39) as follows:

PART 39—AIRWORTHINESS DIRECTIVES

■ 1. The authority citation for part 39 continues to read as follows:

Authority: 49 U.S.C. 106(g), 40113, 44701.

§ 39.13 [Amended]

■ 2. Section 39.13 is amended by adding a new airworthiness directive to read as follows:

2003–15–07 Honeywell International Inc. (formerly AlliedSignal): Amendment 39–13250. Docket No. 2002-NE–42–AD.

Applicability

This airworthiness directive (AD) is applicable to Honeywell International Inc. (formerly AlliedSignal) model RE220 (RJ) auxiliary power units (APUs) part number (P/N) WE3800770–2. These APUs are installed on, but not limited to Bombardier model CL–600–2C10 airplanes.

Note 1: This AD applies to each APU identified in the preceding applicability provision, regardless of whether it has been modified, altered, or repaired in the area subject to the requirements of this AD. For APUs that have been modified, altered, or repaired so that the performance of the requirements of this AD is affected, the owner/operator must request approval for an alternative method of compliance in accordance with paragraph (e) of this AD. The request should include an assessment of the effect of the modification, alteration, or repair on the unsafe condition addressed by this AD; and, if the unsafe condition has not been eliminated, the request should include specific proposed actions to address it.

Compliance

Compliance with this AD is required as indicated, unless already done.

To prevent APU compartment fires and fuel vapor explosion, do the following:

(a) Within six months after the effective date of this AD, replace APU fuel nozzles, P/N WE3830486–2, with new design fuel nozzles, P/N WE3830513–1. Information on fuel nozzle replacement can be found in Honeywell International Inc. alert service bulletin (ASB) RE220–49–A7714, dated November 4, 2002.

(b) Reidentify the APU as follows:

(1) Change the P/N from WE3800770–2 to WE3800770–3 on the identification plate, by removing the –2 and vibropeening or hand stamping a –3 in its place.

(2) Vibropeen or hand stamp the letter ''C'' after the serial number to show conversion.

(3) Vibropeen or hand stamp ''Change Number 3'' on the identification plate adjacent to the MOD RECORD.

(c) Start the APU and perform a visual fuel leak check after one minute of operation.

(d) After the effective date of this AD, do not install fuel nozzles P/N WE3830486–2 into any APU P/N WE3800770–3.

Alternative Methods of Compliance

(e) An alternative method of compliance or adjustment of the compliance time that provides an acceptable level of safety may be used if approved by the Manager, Los Angeles Aircraft Certification Office (LAACO). Operators must submit their requests through an appropriate FAA Principal Maintenance Inspector, who may add comments and then send it to the Manager, LAACO.

Note 2: Information concerning the existence of approved alternative methods of compliance with this airworthiness directive, if any, may be obtained from the LAACO.

Special Flight Permits

(f) Special flight permits may be issued in accordance with §§ 21.197 and 21.199 of the Federal Aviation Regulations (14 CFR 21.197 and 21.199) to operate the airplane to a location where the requirements of this AD can be done.

Effective Date

(g) This amendment becomes effective on September 3, 2003.

Issued in Burlington, Massachusetts, on July 24, 2003.

Francis A. Favara,

Acting Manager, Engine and Propeller Directorate, Aircraft Certification Service.

[FR Doc. 03–19309 Filed 7–29–03; 8:45 am]

BILLING CODE 4910–13–P

DEPARTMENT OF TRANSPORTATION

Federal Aviation Administration

14 CFR Part 39

[Docket No. 2003–NE–03–AD; Amendment 39–13249; AD 2003–15–06]

RIN 2120–AA64

Airworthiness Directives; Rolls-Royce plc RB211 Trent 800 Series Turbofan Engines

AGENCY: Federal Aviation Administration, DOT.

ACTION: Final rule.

SUMMARY: This amendment adopts a new airworthiness directive (AD) that applies to Rolls-Royce plc (RR) RB211 Trent 875–17, Trent 877–17, Trent 884–17, Trent 892–17, Trent 892B–17, and Trent 895–17 turbofan engines with high pressure (HP) compressor rotor rear stage 5 and 6 discs and cone shafts, part numbers (P/Ns) FK25230 and FK27899 installed. This amendment requires removal from service of these HP compressor rotor rear stage 5 and 6 discs and cone shafts, before reaching newly reduced life limits. This amendment is prompted by three reports of crack indications in the stage 5 and stage 6 blade loading slots, found during engine overhaul. We are issuing this AD to prevent stage 5 and 6 disc crack initiation and propagation leading to uncontained disc failure and damage to the airplane.

DATES: Effective September 3, 2003.

ADDRESSES: The service information referenced in this AD may be obtained from Rolls Royce plc, P.O. Box 31, DERBY, DE24 8BJ, UK, telephone: 44 (0) 1332 242424; fax: 44 (0) 1332 249936. This information may be examined, by appointment, at the Federal Aviation Administration (FAA), New England Region, Office of the Regional Counsel, 12 New England Executive Park, Burlington, MA; or at the Office of the Federal Register, 800 North Capitol Street, NW., suite 700, Washington, DC.

FOR FURTHER INFORMATION CONTACT: James Lawrence, Aerospace Engineer, Engine Certification Office, FAA, Engine and Propeller Directorate, 12 New England Executive Park, Burlington, MA 01803–5299, telephone (781) 238–7176; fax (781) 238–7199.

SUPPLEMENTARY INFORMATION: A proposal to amend part 39 of the Federal Aviation Regulations (14 CFR part 39) to include an AD that is applicable to RR RB211 Trent 875–17, Trent 877–17, Trent 884–17, Trent 892–17, Trent 892B–17, and Trent 895–17 turbofan engines with HP compressor rotor rear stage 5 and 6 discs and cone shafts, part numbers (P/Ns) FK25230 and FK27899 installed was published in the **Federal Register** on March 11, 2003. That action proposed to require removal from service of these HP compressor rotor rear stage 5 and 6 discs and cone shafts, before reaching newly reduced life limits. Information on the reduced life limits of these HP compressor rotors may be found in RR mandatory service bulletin (MSB) RB.211–72–E082, Revision 2, dated November 22, 2002.

Comments

Interested persons have been afforded an opportunity to participate in the making of this amendment. Due consideration has been given to the comments received.

Request To Include a Reference to RR Service Information

One commenter requests that a reference to RR MSB RB.211–72–E082, Revision 2, dated November 22, 2002, be included in the final rule. The commenter believes that the reference to the MSB is necessary for clarification and for traceability to the AD if future revisions to the MSB are issued.

The FAA agrees. The MSB reference is included in the Supplementary Information paragraph and in Compliance paragraph (a).

Request To Withdraw Unnecessary AD

One commenter states that the new life limit specified in the AD has already been included in the RB211 Trent Time Limits Manual (Chapter 5); therefore, the AD is unnecessary.

The FAA does not agree. Although the new life limits have been included in the RB211 Time Limits Manual, the reduced life limits are not enforceable unless mandated by an AD. Accordingly, the FAA will not change the AD based on this comment.

After careful review of the available data, including the comments noted above, the FAA has determined that air safety and the public interest the adoption of the rule with the change described previously. The FAA has determined that this change will neither increase the economic burden on any operator nor increase the scope of the AD.

Regulatory Analysis

This final rule does not have federalism implications, as defined in Executive Order 13132, because it would not have a substantial direct effect on the States, on the relationship between the national government and the States, or on the distribution of power and responsibilities among the

various levels of government. Accordingly, the FAA has not consulted with state authorities prior to publication of this final rule.

For the reasons discussed above, I certify that this action: (1) Is not a ''significant regulatory action'' under Executive Order 12866; (2) is not a ''significant rule'' under the DOT Regulatory Policies and Procedures (44 FR 11034, February 26, 1979); and (3) will not have a significant economic impact, positive or negative, on a substantial number of small entities under the criteria of the Regulatory Flexibility Act. A final evaluation has been prepared for this action and it is contained in the Rules Docket. A copy of it may be obtained by contacting the Rules Docket at the location provided under the caption **ADDRESSES.**

List of Subjects in 14 CFR Part 39

Air transportation, Aircraft, Aviation safety, Safety.

Adoption of the Amendment

■ Accordingly, pursuant to the authority delegated to me by the Administrator, the Federal Aviation Administration amends part 39 of the Federal Aviation Regulations (14 CFR part 39) as follows:

PART 39—AIRWORTHINESS DIRECTIVES

■ 1. The authority citation for part 39 continues to read as follows:

Authority: 49 U.S.C. 106(g), 40113, 44701.

§ 39.13 [Amended]

■ 2. Section 39.13 is amended by adding a new airworthiness directive to read as follows:

2003–15–06 Rolls-Royce plc: Amendment 39–13249. Docket No. 2003–NE–03–AD.

Applicability

This airworthiness directive (AD) applies to Rolls-Royce plc (RR) RB211 Trent 875–17, Trent 877–17, Trent 884–17, Trent 892–17, Trent 892B–17, and Trent 895–17 turbofan engines with high pressure (HP) compressor rotor rear stage 5 and 6 discs and cone shafts, part numbers (P/Ns) FK25230 and FK27899 installed. These engines are installed on, but not limited to Boeing 777 airplanes.

Note 1: This AD applies to each engine identified in the preceding applicability provision, regardless of whether it has been modified, altered, or repaired in the area subject to the requirements of this AD. For engines that have been modified, altered, or repaired so that the performance of the requirements of this AD is affected, the owner/operator must request approval for an alternative method of compliance in accordance with paragraph (c) of this AD. The request should include an assessment of the effect of the modification, alteration, or repair on the unsafe condition addressed by this AD; and, if the unsafe condition has not been eliminated, the request should include specific proposed actions to address it.

Compliance

You are responsible for having the actions required by this AD performed within the compliance times specified unless the actions have already been accomplished.

To prevent stage 5 and 6 disc crack initiation and propagation leading to uncontained disc failure and damage to the airplane, do the following:

(a) Remove HP compressor rotor rear stage 5 and 6 discs and cone shafts, from service at or before accumulating 7,500 cycles-since-new (CSN). Information on the reduced life limits may be found in RR mandatory service bulletin RB.211–72–E082, Revision 2, dated November 22, 2002.

(b) After the effective date of this AD, do not install any HP compressor rotor rear stage 5 and 6 discs and cone shaft, listed in this AD, that exceed 7,500 CSN.

Alternative Methods of Compliance

(c) An alternative method of compliance or adjustment of the compliance time that provides an acceptable level of safety may be used if approved by the Manager, Engine Certification Office (ECO). Operators must submit their request through an appropriate FAA Principal Maintenance Inspector, who may add comments and then send it to the Manager, ECO.

Note 2: Information concerning the existence of approved alternative methods of compliance with this airworthiness directive, if any, may be obtained from the ECO.

Special Flight Permits

(d) Special flight permits may be issued in accordance with §§ 21.197 and 21.199 of the Federal Aviation Regulations (14 CFR 21.197 and 21.199) to operate the airplane to a location where the requirements of this AD can be done.

Note 3: The subject of this AD is addressed in CAA airworthiness directive 002–08–2002, dated November 22, 2002.

Effective Date

(e) This amendment becomes effective on September 3, 2003.

Issued in Burlington, Massachusetts, on July 23, 2003.

Francis A. Favara,

Acting Manager, Engine and Propeller Directorate, Aircraft Certification Service.

[FR Doc. 03–19306 Filed 7–29–03; 8:45 am]

BILLING CODE 4910–13–P

DEPARTMENT OF TRANSPORTATION

Federal Aviation Administration

14 CFR Part 95

[Docket No. 30380; Amdt. No. 443]

IFR Altitudes; Miscellaneous Amendments

AGENCY: Federal Aviation Administration (FAA), DOT.

ACTION: Final rule.

SUMMARY: This amendment adopts miscellaneous amendments to the required IFR (instrument flight rules) altitudes and changeover points for certain Federal airways, jet routes, or direct routes for which a minimum or maximum en route authorized IFR altitude is prescribed. This regulatory action is needed because of changes occurring in the National Airspace System. These changes are designed to provide for the safe and efficient use of the navigable airspace under instrument conditions in the affected areas.

EFFECTIVE DATE: 0901 UTC, September 4, 2003.

FOR FURTHER INFORMATION CONTACT: Donald P. Pate, Flight Procedure Standards Branch (AMCAFS–420), Flight Technologies and Programs Division, Flight Standards Service, Federal Aviation Administration, Mike Monroney Aeronautical Center, 6500 South MacArthur Blvd. Oklahoma City, OK. 73169 (Mail Address: PO Box 25082 Oklahoma City, OK. 73125) telephone: (405) 954–4164.

SUPPLEMENTARY INFORMATION: This amendment to part 95 of the Federal Aviation Regulations (14 CFR part 95) amends, suspends, or revokes IFR altitudes governing the operation of all aircraft in flight over a specified route or any portion of that route, as well as the changeover points (COPs) for Federal airways, jet routes, or direct routes as prescribed in part 95.

The Rule

The specified IFR altitudes, when used in conjunction with the prescribed changeover points for those routes, ensure navigation aid coverage that is adequate for safe flight operations and free of frequency interference. The reasons and circumstances that create the need for this amendment involve matters of flight safety and operational efficiency in the National Airspace System, are related to published aeronautical charts that are essential to the user, and provide for the safe and efficient use of the navigable airspace. In addition, those various reasons or

circumstances require making this amendment effective before the next scheduled charting and publication date of the flight information to assure its timely availability to the user. The effective date of this amendment reflects those considerations. In view of the close and immediate relationship between these regulatory changes and safety in air commerce, I find that notice and public procedure before adopting this amendment are impracticable and contrary to the public interest and that good cause exists for making the amendment effective in less than 30 days.

Conclusion

The FAA has determined that this regulation only involves an established body of technical regulations for which frequent and routine amendments are necessary to keep them operationally current. It, therefore—(1) is not a ''significant regulatory action'' under Executive Order 12866; (2) is not a ''significant rule'' under DOT Regulatory Policies and Procedures (44 FR 11034; February 26, 1979); and (3) does not warrant preparation of a regulatory evaluation as the anticipated impact is so minimal. For the same reason, the FAA certifies that this amendment will not have a significant economic impact on a substantial number of small entities under the criteria of the Regulatory Flexibility Act.

List of Subjects in 14 CFR Part 95

Airspace, Navigation (air).

Issued in Washington, DC on July 25, 2003.

James J. Ballough,

Director, Flight Standards Service.

Adoption of the Amendment

■ Accordingly, pursuant to the authority delegated to me by the Administrator, part 95 of the Federal Aviation Regulations (14 CFR part 95) is amended as follows effective at 0901 UTC, September 4, 2003.

PART 95—[AMENDED]

■ 1. The authority citation for part 95 continues to read as follows:

Authority: 49 U.S.C. 106(g), 40103, 40106, 40113, 40114, 40120, 44502, 44514, 44719, 44721.

■ 2. Part 95 is amended to read as follows:

From	To	MEA
§ 95.1001 Direct Routes—U.S.		
Atlantic Routes—A555 Is Amended To Read in Part		
Stella Maris, BS NDB	Micas, IB FIX	2,000
Micas, IB FIX	Egann, IB FIX	5,000
Egann, IB FIX	Mayag, IB FIX	2,000
Mayag, IB FIX	Grand Turk, BS VORTAC	2,000
Atlantic Routes—G629 Is Amended By Adding		
Great Inagua, BS NDB	Cathi, OA FIX	3,000
Cathi, OA FIX	Providenciales, BS VOR/DME	1,500
Providenciales, BS VOR/DME	Egann, IB FIX	1,500
Egann, IB FIX	Raham, IB FIX	2,000
Atlantic Routes—G648 Is Amended By Adding		
Grand Turk, BS VORTAC	Providenciales, BS VOR/DME	1,500
Providenciales, BS VOR/DME	Micas, IB FIX	2,000
Bahamas Routes—63v Is Amended To Read in Part		
Turps, FL FIX	Mixae, IB FIX	3,000
Mixae, IB FIX	Halbi, BS FIX	4,000
§ 95.6001 Victor Routes__U.S.		
§ 95.6014 VOR Federal Airway 14 Is Amended To Read in Part		
Will Rogers, OK VORTAC *3,000–MOCA	Totes, OK FIX	*3,700
§ 95.6017 VOR Federal Airway 17 Is Amended To Read in Part		
Milet, TX FIX *2,500–MOCA	Somer, TX FIX	*4,000
§ 95.6514 VOR Federal Airway 514 Is Amended To Read in Part		
Twentynine Palms, CA VORTAC * 10,200–MCA GoFFS VORTAC NE ** 7,800—MOCA	*GoFFS, CA VORTAC	** 12,000
§ 95.6538 VOR Federal Airway 538 Is Amended To Read in Part		
Twentynine Palms, CA VORTAC	*GoFFS, CA VORTAC	** 12,000

From	To	MEA
*10,200–MCA GOFFS VORTAC NE **7,800–MOCA		
§ 95.6566 VOR Federal Airway 566 Is Amended To Read in Part		
Works, TX FIX	Belcher, LA VORTAC	3,100

From	To	MEA	MAA
§ 95.7001 Jet Routes **§ 95.7010 Jet Route No. 10 Is Amended To Read in Part**			
Twentynine Palms, CA VORTAC	Hippi, AZ FIX	23000	40000
Hippi, AZ FIX	Flagstaff, AZ VOR/DME	23000	40000
Flagstaff, AZ VOR/DME	Farmington, NM VORTAC	18000	40000
§ 95.7147 Jet Route No. 147 Is Amended To Read in Part			
Beckley, WV VORTAC	Greenbrier VOR/DME	18000	45000
Greenbrier VOR/DME	Casanova, VA VORTAC	18000	45000

[FR Doc. 03–19403 Filed 7–29–03; 8:45 am]
BILLING CODE 4910–13–P

DEPARTMENT OF STATE

22 CFR Part 126

[Public Notice 4399]

RIN 1400–AB82

Bureau of Political-Military Affairs; Amendment to the International Traffic in Arms Regulations: Partial Lifting of Embargo Against Rwanda

AGENCY: Department of State.

ACTION: Final rule.

SUMMARY: This rule amends the International Traffic in Arms Regulations (ITAR) by removing Rwanda from the list of embargoed country examples in 22 CFR 126.1(a). It further clarifies that a policy of denial will remain in place for any new license applications, requests for approval, exports or imports of defense articles or defense services destined for or originating in Rwanda other than by the Government of Rwanda.

EFFECTIVE DATE: July 30, 2003.

FOR FURTHER INFORMATION CONTACT: Mary Sweeney, Office of Defense Trade Controls Management, Bureau of Political-Military Affairs, Department of State (202) 663–2700.

SUPPLEMENTARY INFORMATION: The President issued Executive Order 12918 (May 26, 1994) implementing United Nations Security Council Resolution 918 (May 17, 1994). Due to the civil strife in Rwanda, Resolution 918 called upon all States to impose an embargo upon Rwanda. Consequently, all licenses and other approvals authorizing the export or transfer of defense articles or services to Rwanda were suspended, and a denial policy was imposed upon all new applications or other requests for such exports or transfers to Rwanda by **Federal Register** notice of June 2, 1994. Effective August 17, 1994, section 126.1 of the ITAR was amended to add Rwanda to the exemplary list of embargoed countries.

United Nations Security Council Resolution 1011 (August 16, 1995) lifted the arms embargo only with respect to the Government of Rwanda. That Resolution retained the restriction that all States ''* * * continue to prevent'' transfers of ''arms and related materiel of all types * * * to Rwanda, or to persons in the States neighboring Rwanda if such sale or supply is for the purpose of the use of such arms or materiel within Rwanda, other than to the Government of Rwanda * * *.''

Accordingly, the policy of denial will remain in place for exports or other transfers of defense articles and defense services covered by section 38 of the Arms Export Control Act for use or originating in Rwanda other than by the Government of Rwanda. This action precludes the use in connection with non-governmental end-users in Rwanda of any exemptions from licensing or other approval requirements. Also, arms exports and transfers to or imports from Rwanda or neighboring States for use by the Government of Rwanda will continue to receive strict case-by-case review.

To implement United Nations Security Council Resolution 1011, section 126.1(a) of the ITAR is amended and section 126.1(h) is added to set forth the policy of denial with respect to Rwanda except for the Government of Rwanda.

This amendment involves a foreign affairs function of the United States and therefore, is not subject to the procedures required by 5 U.S.C. 553 and 554. It is exempt from review under Executive Order 12866 but has been reviewed internally by the Department to ensure consistency with the purposes thereof. This rule does not require analysis under the Regulatory Flexibility Act or the Unfunded Mandates Reform Act. It has been found not to be a major rule within the meaning of the Small Business Regulatory Enforcement Act of 1966. It will not have substantial direct effects on the States, the relationship between the National Government and the States, or on the distribution of power and responsibilities among the various levels of government. Therefore, in accordance with section 6 of Executive Order 13132, it is determined that this rule does not have sufficient federalism implications to warrant application of Executive Orders 12372 and 13123. Interested parties are invited to submit written comments to the Department of State, Directorate of Defense Trade Controls, Office of Defense Trade Controls Management, ATTN: Regulatory Change, Rwanda embargo, 12th Floor, SA–1, Washington, DC 20522–0112.

List of Subjects in 22 CFR Part 126

Arms and munitions, Exports.

■ Accordingly, for the reasons set forth above, title 22, chapter I, subchapter M, part 126, is amended as follows:

PART 126—GENERAL POLICIES AND PROVISIONS

■ 1. The authority citation for part 126 continues to read as follows:

Authority: Secs. 2, 38, 40, 42, and 71, Pub. L. 90–629, 90 Stat. 744 (22 U.S.C. 2752, 2778, 2780, 2791, and 2797); 22 U.S.C. 2778; E.O. 11958, 42 FR 4311; 3 CFR, 1977 Comp., p. 79; 22 U.S.C. 2658; 22 U.S.C. 287c; E.O. 12918, 59 FR 28205, 3 CFR, 1994 Comp., p. 899.

■ 2. Section 126.1 is amended by revising paragraph (a) and adding paragraph (h) to read as follows:

§ 126.1 Prohibited exports and sales to certain countries.

(a) *General.* It is the policy of the United States to deny licenses, other approvals, exports and imports of defense articles and defense services, destined for or originating in certain countries. This policy applies to Belarus, Cuba, Iran, Iraq, Libya, North Korea, Syria, and Vietnam. This policy also applies to countries with respect to which the United States maintains an arms embargo (*e.g.* Burma, China, Haiti, Liberia, Somalia, Sudan and Democratic Republic of the Congo (formerly Zaire)) or whenever an export would not otherwise be in furtherance of world peace and the security and foreign policy of the United States. Information regarding certain other embargoes appears elsewhere in this section. Comprehensive arms embargoes are normally the subject of a State Department notice published in the **Federal Register**. The exemptions provided in the regulations in this subchapter, except §§ 123.17 and 125.4(b)(13) of this subchapter, do not apply with respect to articles originating in or for export to any proscribed countries, areas, or persons in this § 126.1.

* * * * *

(h) *Rwanda.* It is the policy of the United States to deny licenses, other approvals, exports and imports of defense articles and defense services, destined for or originating in Rwanda except for the Government of Rwanda, which will be reviewed on a case-by-case basis. UN Security Council Resolution 1011 (1995) lifted the embargo only with respect to the Government of Rwanda.

Dated: June 24, 2003.

John R. Bolton,

Under Secretary, Arms Control and International Security, Department of State.

[FR Doc. 03–17602 Filed 7–29–03; 8:45 am]

BILLING CODE 4710–25–P

DEPARTMENT OF THE INTERIOR

Bureau of Indian Affairs

25 CFR Part 11

RIN 1076–AE41

Law and Order on Indian Reservations

AGENCY: Bureau of Indian Affairs, Interior.

ACTION: Final rule and request for comments.

SUMMARY: The Bureau of Indian Affairs is amending its regulations that govern law and order on Indian reservations. This rule removes the Paiute-Shoshone Indian Tribe of the Fallon Reservation and Colony (Western Region, Nevada) from the listing of Courts of Indian Offenses. The tribe has reassumed tribal court function and has requested their removal from the list.

DATES: This rule is effective on July 30, 2003. Comments must be received on or before September 29, 2003.

ADDRESSES: Send comments on this rule to Ralph Gonzales, Office of Tribal Services, Bureau of Indian Affairs, 1951 Constitution Avenue, NW., MS 320–SIB, Washington, DC 20240.

FOR FURTHER INFORMATION CONTACT: Sharlot Johnson, Tribal Government Officer, Western Regional Office, Bureau of Indian Affairs, 400 N. Fifth Street, Phoenix, Arizona, 85004, (602) 379–6786; or Ralph Gonzales, Branch of Judicial Services, Office of Tribal Services, Bureau of Indian Affairs, 1951 Constitution Avenue, NW., MS 320–SIB, Washington, DC 20240, (202) 513–7629.

SUPPLEMENTARY INFORMATION: The authority to issue this rule is vested in the Secretary of the Interior by 5 U.S.C. 301 and 25 U.S.C. 2 and 9; and 25 U.S.C. 13, which authorizes appropriations for ''Indian judges.'' See *Tillett* v. *Hodel,* 730 F. Supp. 381 (W.D. Okla. 1990), *aff'd,* 931 F.2d 636 (10th Cir. 1991) *United States* v. *Clapox,* 13 Sawy. 349, 35 F. 575 (D. Ore. 1888). This rule is published in exercise of the rulemaking authority delegated by the Secretary of the Interior to the Assistant Secretary—Indian Affairs.

On September 18, 2001, the Bureau of Indian Affairs (BIA) published a temporary final rule (66 FR 48085) amending its regulations contained in 25 CFR part 11 to add the Paiute-Shoshone Indian Tribe of the Fallon Reservation and Colony (Western Region, Nevada) to the list of Courts of Indian Offenses. This amendment established a Court of Indian Offenses for a period not to exceed one year. On September 24, 2002, the BIA published a final rule (67 FR 59781) establishing the Court of Indian Offenses for an indefinite period. The purpose of establishing a Court of Indian Offenses at the Fallon Reservation and Colony was to protect persons, land, lives and property of people residing there until the tribe reassumed its Law and Order program. The tribe has reassumed the tribal court function and notified the BIA by Tribal Resolution No. 03–F–054 that it is operating the court in accordance with its Constitution, Article VI, Section 1(h), and requested the removal of their listing from 25 CFR 11.100(a).

Determination To Publish a Final Rule Effective Immediately

In accordance with the requirements of the Administrative Procedure Act (5 U.S.C. 553(B)), we have determined that publishing a proposed rule would be impractical because of the risk to public safety as well as further risk of exposure of the Federal Government to a lawsuit for failure to execute diligently its trust responsibility and to provide adequate judicial services for law enforcement on trust land. For this reason, an immediate effective date is in the public interest and in the interest of the tribe not to delay implementation of this amendment. We are therefore publishing this change as a final rule with request for comments.

BIA has determined it appropriate to make the rule effective immediately by waiving the 5 U.S.C. 553(d) requirement of publication 30 days in advance of the effective date. This is because of the critical need to ensure that uninterrupted court services are provided at the Fallon Reservation and Colony. Therefore, this final rule is effective immediately.

We invite comments on any aspect of this rule and we will revise the rule if comments warrant. Send comments on this rule to the address in the **ADDRESSES** section.

Regulatory Planning and Review (Executive Order 12866)

In accordance with the criteria in Executive Order 12866, this rule is not a significant regulatory action. OMB makes the final determination under Executive Order 12866.

(a) This rule will not have an annual economic effect of $100 million or adversely affect an economic sector, productivity, jobs, the environment, or other units of government. A cost-benefit and economic analysis is not required. The operational cost of the tribal court is estimated to be less than $200,000 annually. The cost associated with the operation of this court will be

with the Bureau of Indian Affairs and the tribe.

(b) This rule will not create inconsistencies with other agencies' actions. The Department of the Interior, through the Bureau of Indian Affairs, has responsibility and authority to ensure that there are judicial systems in place on Indian reservations to protect persons, land, lives and property of people residing there.

(c) This rule will not materially affect entitlements, grants, user fees, loan programs, or the rights and obligations of their recipients. This tribal court will not affect any program rights of the Paiute-Shoshone Indian Tribe of the Fallon Reservation and Colony. Its primary function will be to administer justice for people within the tribe's reservation and colony.

(d) This rule will not raise novel legal or policy issues. Tribal governments have inherent sovereign authority to establish their own form of government, including tribal justice systems (25 U.S.C. 3601).

Regulatory Flexibility Act

The Department of the Interior, BIA, certifies that this rule will not have a significant economic effect on a substantial number of small entities as defined under the Regulatory Flexibility Act (5 U.S.C. 601 *et seq.*). An initial Regulatory Flexibility Analysis is not required. Accordingly, a Small Entity Compliance Guide is not required. The amendment to 25 CFR 11.100(a) removes the Paiute-Shoshone Indian Tribe of the Fallon Reservation and Colony (Western Region, Nevada) from the listing of Courts of Indian Offenses. Accordingly, there will be no impact on any small entities.

Small Business Regulatory Enforcement Fairness Act

This rule is not a major rule under 5 U.S.C. 804(2), the Small Business Regulatory Enforcement Fairness Act. This rule:

(a) Does not have an annual effect on the economy of $100 million or more. This court's operating cost is estimated to be less than $200,000 annually. The cost associated with the operation of this court will be with the BIA and the tribe.

(b) Will not cause a major increase in costs or prices for consumers, individual industries, Federal, State, or local government agencies, or geographic regions. This is a court established specifically for the administration of justice for people located within the exterior boundaries of the Paiute-Shoshone Indian Tribe of the Fallon Reservation and Colony and will not have any cost or price impact on any other entities in the geographical region.

(c) Does not have significant adverse effects on competition, employment, investment, productivity, innovation, or the ability of United States-based enterprises to compete with foreign-based enterprises. This is a court established specifically for the administration of justice for people located within the exterior boundaries of the Paiute-Shoshone Indian Tribe of the Fallon Reservation and Colony, Fallon, Nevada, and will not have an adverse impact on competition, investment, productivity, innovation, or the ability of United States-based enterprises to compete with foreign-based enterprises.

Unfunded Mandates Reform Act

In accordance with the Unfunded Mandates Reform Act (2 U.S.C. 1501 *et seq.*):

(a) This rule will not ''significantly or uniquely'' affect small governments. A Small Government Agency Plan is not required. The tribal court will not have jurisdiction to affect any rights of small governments. Its primary function will be to administer justice for people within the Fallon Indian Reservation and Colony.

(b) This rule will not produce a Federal mandate of $100 million or greater in any year; *i.e.*, it is not a ''significant regulatory action'' under the Unfunded Mandates Reform Act.

Takings Implication Assessment (Executive Order 12630)

In accordance with Executive Order 12630, this rule does not have significant takings implications. A takings implication assessment is not required. The amendment to 25 CFR 11.100(a) will provide for a tribal justice system with jurisdiction over people within a limited geographical area at Fallon, Nevada. Accordingly, there will be no jurisdictional basis for the tribal court to affect adversely any property interest outside of its jurisdiction.

Federalism (Executive Order 13132)

In accordance with Executive Order 13132, this rule does not have significant Federalism effects. A Federalism assessment is not required. This rule concerns the recognition by the Federal Government of a tribe's inherent authority to establish their own justice systems and does not infringe on states' judicial systems. If the tribe chooses, they can establish their own judicial system apart from any State or local government in accordance with 25 CFR 11.100(c). The Paiute-Shoshone Indian Tribe of the Fallon Reservation and Colony (Western Region, Nevada) is acting under the purview of this provision in reassuming the judicial function on their reservation.

Civil Justice Reform (Executive Order 12988)

In accordance with Executive Order 12988, it has been determined that this rule does not unduly burden the judicial system and meets the requirements of sections 3(a) and 3(b)(2) of the Order. Congress, through statutes, treaties, and the exercise of administrative authorities, has recognized the self-determination, self-reliance, and inherent sovereignty of Indian tribes to establish their own form of government, including tribal justice systems (25 U.S.C. 3601).

Paperwork Reduction Act

This regulation does not require an information collection under the Paperwork Reduction Act. The information collection is not covered by an existing OMB approval. An OMB form 83–I has not been prepared and has not been approved by the Office of Policy Analysis. No information is being collected as a result of this court exercising its limited jurisdiction over people within the exterior boundaries of the Paiute-Shoshone Indian Tribe of the Fallon Reservation and Colony.

National Environmental Policy Act

We have analyzed this rule in accordance with the criteria of the National Environmental Policy Act and 516 DM. This rule does not constitute a major Federal action significantly affecting the quality of the human environment. An environmental impact statement/assessment is not required. This tribal court exercises jurisdiction over people within the exterior boundaries of the Paiute-Shoshone Indian Tribe of the Fallon Reservation and Colony and does not have any impact on the environment.

Consultation and Coordination with Indian Tribal Governments (Executive Order 13175)

Pursuant to Executive Order 13175 of November 6, 2000, ''Consultation and Coordination with Indian Tribal Governments,'' we have evaluated potential effects on federally recognized Indian tribes and have determined that there are no potential effects. The amendment to 25 CFR 11.100(a) does not apply to any of the 562 federally recognized tribes, except the Paiute-Shoshone Indian Tribe of the Fallon Reservation and Colony. The tribe is exercising its inherent sovereignty by

providing a judicial system for people within the exterior boundaries of the Paiute-Shoshone Indian Tribe of the Fallon Reservation and Colony. The Department of the Interior is fulfilling its trust responsibility and complying with the unique government-to-government relationship that exists between the Federal Government and Indian tribes by assisting the Paiute-Shoshone Indian Tribe of the Fallon Reservation and Colony to support this justice system.

List of Subjects in 25 CFR Part 11

Courts, Indians—law, Law enforcement, Penalties.

■ For the reasons stated in the preamble, we are amending part 11, chapter I of title 25 of the Code of Federal Regulations, as follows:

PART 11—LAW AND ORDER ON INDIAN RESERVATIONS

■ 1. The authority citation for part 11 continues to read as follows:

Authority: 5 U.S.C. 301; R.S. 463; 25 U.S.C. 2; R.S. 465; 25 U.S.C. 9; 42 Stat. 208; 25 U.S.C. 13; 38 Stat. 586; 25 U.S.C. 200.

§ 11.100 [Amended]

■ 2. In § 11.100, remove paragraph (a)(15).

Dated: July 18, 2003.

Aurene M. Martin,

Acting Assistant Secretary—Indian Affairs.

[FR Doc. 03–19314 Filed 7–29–03; 8:45 am]

BILLING CODE 4310–4J–P

DEPARTMENT OF THE TREASURY

Internal Revenue Service

26 CFR Parts 1 and 602

[TD 9084]

RIN 1545–AY27

Dual Consolidated Loss Recapture Events

AGENCY: Internal Revenue Service (IRS), Treasury.

ACTION: Final regulations.

SUMMARY: This document contains final regulations under section 1503(d) regarding the events that require the recapture of dual consolidated losses. These regulations are issued to facilitate compliance by taxpayers with the dual consolidated loss provisions. The regulations generally provide that certain events will not trigger recapture of a dual consolidated loss or payment of the associated interest charge. The regulations provide for the filing of certain agreements in such cases. This document also makes clarifying and conforming changes to the current regulations.

DATES: *Effective Dates:* These regulations are effective January 1, 2002.

FOR FURTHER INFORMATION CONTACT: Kenneth D. Allison or Kathryn T. Holman, (202) 622–3860 (not a toll-free number).

SUPPLEMENTARY INFORMATION:

Paperwork Reduction Act

The collection of information contained in these final regulations has been reviewed and approved by the Office of Management and Budget in accordance with the Paperwork Reduction Act of 1995 (44 U.S.C. 3507(d)) under control number 1545–1583. Responses to this collection of information are required to obtain the benefit of avoiding entering into a closing agreement with the IRS.

An agency may not conduct or sponsor, and a person is not required to respond to, a collection of information unless it displays a valid control number assigned by the Office of Management and Budget.

The estimated annual burden per recordkeeper varies from 1 to 3 hours, depending on individual circumstances, with an estimated average of 2 hours.

Comments concerning the accuracy of this burden estimate and suggestions for reducing this burden should be sent to the Internal Revenue Service, Attn: IRS Reports Clearance Officer, W:CAR:MP:T:T:SP, Washington, DC 20224, and to the Office of Management and Budget, Attn: Desk Officer for the Department of the Treasury, Office of Information and Regulatory Affairs, Washington, DC 20503.

Books or records relating to a collection of information must be retained as long as their contents might become material in the administration of any internal revenue law. Generally, tax returns and tax return information are confidential, as required by 26 U.S.C. 6103.

Background

Final regulations implementing section 1503(d) were adopted by TD 8434 (1992–C.B. 240), on September 9, 1992, and published in the **Federal Register** at 57 FR 41079 (REG–106879–00). On August 1, 2002, proposed regulations amending the final regulations, to reduce administrative burdens in certain cases, were published in the **Federal Register** at 67 FR 49892. Three written comments were received. No public hearing was requested or held. After consideration of the comments, these final regulations are adopted by this Treasury decision. The changes and clarifications made in the final regulations in response to the comments received are discussed below.

Explanation of Provisions and Summary of Comments

Section 1503(d) generally provides that a ''dual consolidated loss'' of a domestic corporation cannot offset the taxable income of any other member of the corporation's consolidated group. The statute, however, authorizes the issuance of regulations permitting the use of a dual consolidated loss to offset the income of a domestic affiliate if the loss does not offset the income of a foreign corporation under foreign law.

Section 1.1503–2(g)(2)(i) currently permits a taxpayer to elect to use a dual consolidated loss of a dual resident corporation or separate unit to offset the income of a domestic affiliate by filing an agreement ((g)(2)(i) agreement) under which the taxpayer certifies that the dual consolidated loss has not been, and will not be, used to offset the income of another person under the laws of a foreign country. Section 1.1503–2(g)(2)(iii) provides that, in the year of a ''triggering event,'' the taxpayer must recapture and report as gross income the amount of a dual consolidated loss that is subject to the (g)(2)(i) agreement and must pay the interest charge required by paragraph (g)(2)(vii). Section 1.1503–2(g)(2)(iv)(B), however, provides that specified acquisitions are not considered to be triggering events if certain conditions are satisfied. In particular, the parties to the acquisition must enter into a closing agreement with the IRS under section 7121, and the acquiring corporation or consolidated group must file a new (g)(2)(i) agreement with

The proposed regulations provided that a triggering event generally does not occur in two types of acquisitions, without any requirement to enter into a closing agreement or file a new (g)(2)(i) agreement: (1) When an unaffiliated dual resident corporation or unaffiliated domestic owner that filed a (g)(2)(i) agreement becomes a member of a consolidated group; and (2) when a dual resident corporation, or domestic owner, that is a member of a consolidated group that filed a (g)(2)(i) agreement (the acquired group) becomes a member of another consolidated group (the acquiring group) in an acquisition, so long as each member of the acquired group that is an includible corporation under section 1504(b) is included immediately after the acquisition in a consolidated U.S. income tax return filed by the acquiring group. Instead, in

such cases, the proposed regulations required the filing of an information statement, whereby taxpayers would provide the IRS with most of the information that otherwise would have been provided in a new (g)(2)(i) agreement.

The proposed regulations were intended to relieve the burden of entering into a closing agreement in circumstances where the several liability imposed by § 1.1502–6, in combination with the original (g)(2)(i) agreement, would provide for liability by the acquiring group sufficiently comparable to that provided by a closing agreement. A commentator, who raised questions regarding comparable liability under § 1.1502–6 in such cases, in particular with respect to the interest charge, recommended that the regulations should retain the existing requirement for the acquiring corporation or consolidated group to enter into a new (g)(2)(i) agreement with respect to the dual consolidated loss. Although the IRS and Treasury believe that § 1.1502–6 provides an independent assurance of several liability, the recommendation to retain the existing requirement for a new (g)(2)(i) agreement has been adopted in these final regulations. The IRS and Treasury have concluded that the intended reduction in administrative burden can be accomplished through the elimination of the requirement to enter into a closing agreement in the cases specified in the proposed regulations. Moreover, with the retention of the requirement to file a new (g)(2)(i) agreement, the requirement in the proposed regulations to file a separate information statement containing essentially the same information has been eliminated. Additional changes have been made to clarify the nature of the new (g)(2)(i) agreement.

The commentators also suggested that any affiliated dual resident corporation or affiliated domestic owner should be permitted to join the acquiring group without causing a triggering event, regardless of whether all members of the consolidated group that filed the original (g)(2)(i) agreement also join the acquiring group, provided that the acquiring group files a new (g)(2)(i) agreement. This suggestion has not been adopted in these final regulations. The final regulations contain a modified description of the types of transactions for which a closing agreement no longer is required, to make clear that all members of an acquired group (or their successors-in-interest) must be members of the acquiring group immediately after the acquisition (*i.e.*, that no member of the acquired group, or its successor-in-interest, is excluded from the acquiring group due to any applicable restriction such as section 1504(a)(3) or section 1504(c)). However, the IRS and Treasury are continuing to consider this suggestion as well as other alternatives for further reducing the administrative and compliance burdens under the section 1503(d) regulations, and invite additional comments in this regard.

In order to accomplish the intended reduction in administrative burdens promptly, the final regulations are applicable with respect to transactions otherwise constituting triggering events occurring on or after January 1, 2002.

Special Analyses

It has been determined that this Treasury decision is not a significant regulatory action as defined in Executive Order 12866. Therefore, a regulatory assessment is not required. It also has been determined that section 553(b) of the Administrative Procedure Act (5 U.S.C. chapter 5) does not apply to these regulations. It is hereby certified that these regulations do not have a significant economic impact on a substantial number of small entities. This certification is based on the fact that these regulations will primarily affect affiliated groups of corporations that also have a foreign affiliate, which tend to be larger businesses. Moreover, the number of taxpayers affected and the average burden are minimal. Therefore, a Regulatory Flexibility Analysis is not required. Pursuant to section 7805(f) of the Internal Revenue Code, the proposed regulations preceding these regulations were submitted to the Chief Counsel for Advocacy of the Small Business Administration for comment on their impact on small business.

Drafting Information

The principal authors of these regulations are Kenneth D. Allison and Kathryn T. Holman of the Office of Associate Chief Counsel (International). However, other personnel from the IRS and Treasury Department participated in their development.

List of Subjects

26 CFR Part 1

Income taxes, Reporting and recordkeeping requirements.

26 CFR Part 602

Reporting and recordkeeping requirements.

Adoption of Amendments to the Regulations

■ Accordingly, 26 CFR parts 1 and 602 are amended as follows:

PART 1—INCOME TAXES

■ **1.** The authority citation for part 1 is amended by adding an entry in numerical order to read in part as follows:

Authority: 26 U.S.C. 7805 * * *

Section 1.1503–2 also issued under 26 U.S.C. 1502 * * *

■ **Par. 2.** In § 1.1503–2 paragraphs (g)(2) and (h)(1) are amended as follows:

■ 1. Paragraphs (g)(2)(iv)(B)(*1*) introductory text, and (g)(2)(iv)(B)(*1*)(*i*) are revised.

■ 2. Paragraph (g)(2)(iv)(B)(*1*)(*ii*) is removed.

■ 3. Paragraphs (g)(2)(iv)(B)(*1*)(*iii*) and (*iv*) are redesignated as paragraphs (g)(2)(iv)(B)(*1*)(*ii*) and (*iii*), respectively.

■ 4. Paragraph (g)(2)(iv)(B)(*2*) and (g)(2)(iv)(B)(*2*)(*iii*) are revised and redesignated as paragraph (g)(2)(iv)(B)(*3*) and (g)(2)(iv)(B)(*3*)(*iii*) respectively.

■ 5. Newly designated paragraph (g)(2)(4)(B)(*3*)(*iii*) is revised.

■ 6. New paragraph (g)(2)(iv)(B)(*2*) is added.

■ 7. Paragraph (g)(2)(iv)(D) is added.

■ 8. Paragraph (h)(1) is amended by adding a sentence at the end of the paragraph.

The revisions and additions read as follows:

§ 1.1503–2 Dual consolidated loss.

* * * * *

(g) * * *

(2) * * *

(iv) * * *

(B) * * * (*1*) If all the requirements of paragraph (g)(2)(iv)(B)(*3*) of this section are met, the following events shall not constitute triggering events requiring the recapture of the dual consolidated loss under paragraph (g)(2)(vii) of this section:

(*i*) An affiliated dual resident corporation or affiliated domestic owner becomes an unaffiliated domestic corporation or a member of a new consolidated group (other than in a transaction described in paragraph (g)(2)(iv)(B)(*2*)(*ii*) of this section);

* * * * *

(*2*) If the requirements of paragraph (g)(2)(iv)(B)(*3*)(*iii*) of this section are met, the following events shall not constitute triggering events requiring the recapture of the dual consolidated loss under paragraph (g)(2)(vii) of this section—

(*i*) An unaffiliated dual resident corporation or unaffiliated domestic

owner becomes a member of a consolidated group;

(*ii*) A consolidated group that filed an agreement under this paragraph (g)(2) ceases to exist as a result of a transaction described in § 1.1502–13(j)(5)(i) (other than a transaction in which any member of the terminating group, or the successor-in-interest of such member, is not a member of the surviving group immediately after the terminating group ceases to exist).

(*3*) If the following requirements (as applicable) are satisfied, the events listed in paragraphs (g)(2)(iv)(B)(*1*) and (*2*) of this section shall not constitute triggering events requiring recapture under paragraph (g)(2)(vii) of this section.

* * * * *

(iii) The unaffiliated domestic corporation or new consolidated group must file, with its timely filed income tax return for the taxable year in which the event described in paragraph (g)(2)(iv)(B)(*1*) or (*2*) of this section occurs, an agreement described in paragraph (g)(2)(i) of this section (new (g)(2)(i) agreement), whereby it assumes the same obligations with respect to the dual consolidated loss as the corporation or consolidated group that filed the original (g)(2)(i) agreement with respect to that loss. The new (g)(2)(i) agreement must be signed under penalties of perjury by the person who signs the return and must include a reference to this paragraph (g)(2)(iv)(B)(*3*)(*iii*).

* * * * *

(D) Example. The following example illustrates the application of paragraph (g)(2)(iv)(B)(*2*)(*ii*) of this section:

Example. (i) Facts. C is the common parent of a consolidated group (the C Group) that includes DRC, a domestic corporation. DRC is a dual resident corporation and incurs a dual consolidated loss in its taxable year ending December 31, Year 1. The C Group elects to be bound by the provisions of this paragraph (g)(2) with respect to the Year 1 dual consolidated loss. No member of the C Group incurs a dual consolidated loss in Year 2. On December 31, Year 2, stock of C is acquired by D in a transaction described in § 1.1502–13(j)(5)(i). As a result of the acquisition, all the C Group members, including DRC, become members of a consolidated group of which D is the common parent (the D Group).

(ii) Acquisition not a triggering event. Under paragraph (g)(2)(iv)(B)(*2*)(*ii*) of this section, the acquisition by D of the C Group is not an event requiring the recapture of the Year 1 dual consolidated loss of DRC, or the payment of an interest charge, as described in paragraph (g)(2)(vii) of this section, provided that the D Group files the new (g)(2)(i) agreement described in paragraph (g)(2)(iv)(B)(*3*)(*iii*) of this section.

(iii) Subsequent event. A triggering event occurs on December 31, Year 3, that requires recapture by the D Group of the dual consolidated loss that DRC incurred in Year 1, as well as the payment of an interest charge, as provided in paragraph (g)(2)(vii) of this section. Each member of the D Group, including DRC and the other former members of the C Group, is severally liable for the additional tax (and the interest charge) due upon the recapture of the dual consolidated loss of DRC.

* * * * *

(h) * * *

(1) * * * Paragraph (g)(2)(iv)(B)(*2*) of this section shall apply with respect to transactions otherwise constituting triggering events occurring on or after January 1, 2002.

* * * * *

PART 602—OMB CONTROL NUMBERS UNDER THE PAPERWORK REDUCTION ACT

■ **3.** The authority citation for part 602 continues to read as follows:

Authority: 26 U.S.C. 7805.

■ **4.** In § 602.101, paragraph (b) is amended by adding an entry for 1.1503–2 to read as follows:

§ 602.601 OMB Control numbers.

* * * * *

(b) * * *

CFR part or section where identified and described	Current OMB control No.
* * * * *	
1.1503–2	1545–1583
* * * * *	

Robert E. Wenzel,

Deputy Commissioner for Services and Enforcement.

Approved: July 17, 2003.

Pamela F. Olson,

Assistant Secretary of the Treasury.

[FR Doc. 03–19366 Filed 7–29–03; 8:45 am]

BILLING CODE 4830–01–P

DEPARTMENT OF HOMELAND SECURITY

Coast Guard

33 CFR Part 165

[COTP Paducah–03–014]

RIN 1625–AA00

Safety Zone; Upper Mississippi River, Mile Marker 51.5 to 52.5, Cape Girardeau, MO

AGENCY: Coast Guard, DHS.

ACTION: Temporary final rule.

SUMMARY: The Coast Guard is establishing a temporary safety zone for all waters of the Upper Mississippi River from mile marker 51.5 to 52.5 near Cape Girardeau, MO. This safety zone is needed to protect vessels from the safety hazards associated with the construction operations on the Cape Girardeau Bridge. Entry into this zone is prohibited unless specifically authorized by the Coast Guard Captain of the Port Paducah or a designated representative.

DATES: This rule is effective from 8 a.m. on July 13, 2003 until 5 p.m. on August 15, 2003.

ADDRESSES: Documents indicated in this preamble as being available in the docket, are part of docket [COTP Paducah-03–014] and are available for inspection or copying at Marine Safety Office Paducah, 225 Tully, Paducah, KY 42003 between 8 a.m. and 4 p.m., Monday through Friday, except Federal holidays.

FOR FURTHER INFORMATION CONTACT: Lieutenant Junior Grade (LTJG) Patrick Mounsey, Marine Safety Office Paducah, Port Operations at (270) 442–1621 ext 350.

SUPPLEMENTARY INFORMATION:

Regulatory Information

We did not publish a notice of proposed rulemaking (NPRM) for this regulation. Under 5 U.S.C. 553(b)(B), the Coast Guard finds that good cause exists for not publishing a NPRM, and under 5 U.S.C. 553(d)(3), the Coast Guard finds that good cause exists for making this rule effective less than 30 days after publication in the **Federal Register**. Publishing a NPRM and delaying its effective date would be contrary to public interest because immediate action is needed to protect vessels and mariners from the hazards associated with construction operations on the Cape Girardeau Bridge.

Background and Purpose

The Captain of the Port Paducah is establishing a temporary safety zone for all waters of the Upper Mississippi River from mile marker 51.5 to 52.5 near Cape Girardeau, MO. This safety zone is needed to protect vessels and mariners from the safety hazards associated with the construction operations on the Cape Girardeau Bridge. Construction operations have been ongoing for several months with an average of one closure a week. Scheduled meetings between the contractor, industry, the Eighth Coast Guard District Bridge Branch and the Captain of the Port

Paducah led to a defined process for scheduling multiple closures a week from July 13, 2003 through August 15, 2003. All closures shall be limited to one 9-hour period, typically from 8 a.m. to 5 p.m. Entry into this zone is prohibited to all vessels unless authorized by the Coast Guard Captain of the Port Paducah or a designated representative.

The Captain of the Port Paducah will announce enforcement periods via marine information broadcasts.

Regulatory Evaluation

This rule is not a ''significant regulatory action'' under section 3(f) of Executive Order 12866, Regulatory Planning and Review, and does not require an assessment of potential costs and benefits under section 6(a)(3) of that Order. The Office of Management and Budget has not reviewed it under that Order. It is not ''significant'' under the regulatory policies and procedures of the Department of Homeland Security (DHS).

This rule will only be in effect for a short period of time and notifications to the marine community will be made through broadcast notice to mariners. The impacts on routine navigation are expected to be minimal as the zone will only be enforced for a nine-hour period three days a week.

Small Entities

Under the Regulatory Flexibility Act (5 U.S.C. 601–612), we have considered whether this rule would have a significant economic impact on a substantial number of small entities. The term ''small entities'' comprises small businesses, not-for-profit organizations that are independently owned and operated and are not dominant in their fields, and governmental jurisdictions with populations of less than 50,000.

The Coast Guard certifies under 5 U.S.C. 605(b) that this rule will not have a significant economic impact on a substantial number of small entities. This rule will affect the following entities, some of which may be small entities: the owners or operators of vessels intending to transit the Upper Mississippi River, from Mile Marker 51.5 to 52.5 from 8 a.m. through 5 p.m. up to three days a week from July 13, 2003 through August 15, 2003. This safety zone will not have a significant economic impact on a substantial number of small entities because this rule will be in effect for only a short period of time.

If you are a small business entity and are significantly affected by this regulation please contact, LTJG Patrick Mounsey, Marine Safety Office Paducah representative, at (270) 442–1621 ext. 350.

Assistance for Small Entities

Under section 213(a) of the Small Business Regulatory Enforcement Fairness Act of 1996 (Public Law 104–121), we offered to assist small entities in understanding the rule so they could better evaluate its effects on them and participate in the rulemaking process. Small businesses may send comments on the actions of Federal employees who enforce, or otherwise determine compliance with, Federal regulations to the Small Business and Agriculture Regulatory Enforcement Ombudsman and the Regional Small Business Regulatory Fairness Boards. The Ombudsman evaluates these actions annually and rates each agency's responsiveness to small business. If you wish to comment on actions by employees of the Coast Guard, call 1–888–REG–FAIR (1–888–734–3247).

Collection of Information

This rule calls for no new collection of information under the Paperwork Reduction Act of 1995 (44 U.S.C. 3501—3520).

Federalism

A rule has implications for federalism under Executive Order 13132, Federalism, if it has a substantial direct effect on State or local governments and would either preempt State law or impose a substantial direct cost of compliance on them. We have analyzed this rule under that Order and have determined that it does not have implications for federalism.

Unfunded Mandates Reform Act

The Unfunded Mandates Reform Act of 1995 (2 U.S.C. 1531–1538) requires Federal agencies to assess the effects of their discretionary regulatory actions. In particular, the Act addresses actions that may result in the expenditure by a State, local, or tribal government, in the aggregate, or by the private sector of $100,000,000 or more in any one year. Though this rule will not result in such an expenditure, we do discuss the effects of this rule elsewhere in this preamble.

Taking of Private Property

This rule will not effect a taking of private property or otherwise have taking implications under Executive Order 12630, Governmental Actions and Interference with Constitutionally Protected Property Rights.

Civil Justice Reform

This rule meets applicable standards in sections 3(a) and 3(b)(2) of Executive Order 12988, Civil Justice Reform, to minimize litigation, eliminate ambiguity, and reduce burden.

Protection of Children

We have analyzed this rule under Executive Order 13045, Protection of Children from Environmental Health Risks and Safety Risks. This rule is not an economically significant rule and does not create an environmental risk to health or risk to safety that may disproportionately affect children.

Indian Tribal Governments

This rule does not have tribal implications under Executive Order 13175, Consultation and Coordination with Indian Tribal Governments, because it does not have a substantial direct effect on one or more Indian tribes, on the relationship between the Federal Government and Indian tribes, or on the distribution of power and responsibilities between the Federal Government and Indian tribes.

Energy Effects

We have analyzed this rule under Executive Order 13211, Actions Concerning Regulations That Significantly Affect Energy Supply, Distribution, or Use. We have determined that it is not a ''significant energy action'' under that Order because it is not a ''significant regulatory action'' under Executive Order 12866 and is not likely to have a significant adverse effect on the supply, distribution, or use of energy. The Administrator of the Office of Information and Regulatory Affairs has not designated it as a significant energy action. Therefore, it does not require a Statement of Energy Effects under Executive Order 13211.

Environment

We have analyzed this rule under Commandant Instruction M16475.lD, which guides the Coast Guard in complying with the National Environmental Policy Act of 1969 (NEPA) (42 U.S.C. 4321–4370f), and have concluded that there are no factors in this case that would limit the use of a categorical exclusion under section 2.B.2 of the Instruction. Therefore, this rule is categorically excluded, under figure 2–1, paragraph (34)(g), of the Instruction, from further environmental documentation. A final ''Environmental Analysis Check List'' and a final ''Categorical Exclusion Determination'' are available in the docket where indicated under **ADDRESSES.**

List of Subjects in 33 CFR Part 165

Harbors, Marine safety, Navigation (water), Reporting and recordkeeping requirements, Security measures, Waterways.

■ For the reasons discussed in the preamble, the Coast Guard amends 33 CFR part 165 as follows:

PART 165—REGULATED NAVIGATION AREAS AND LIMITED ACCESS AREAS

■ 1. The authority citation for part 165 continues to read as follows:

Authority: 33 U.S.C. 1226, 1231; 46 U.S.C. Chapter 701; 50 U.S.C. 191, 195; 33 CFR 1.05–1(g), 6.04–1, 6.04–6, and 160.5; Pub. L. 107–295, 116 Stat. 2064; Department of Homeland Security Delegation No. 0170.1.

■ 2. A new temporary § 165.T08–082 is added to read as follows:

§ 165.T08–082 Safety Zone; Upper Mississippi River, Mile Marker 51.5 to 52.5, Cape Girardeau, MO.

(a) *Location.* The following area is a safety zone: all waters of the Upper Mississippi River from mile marker 51.5 to 52.5, extending the entire width of the river.

(b) *Effective date.* This rule is effective from 8 a.m. on July 13, 2003 until 5 p.m. on August 15, 2003.

(c) *Enforcement period.* This section will be enforced from 8 a.m. through 5 p.m. up to 3 days a week from July 13, 2003 through August 15, 2003. The Captain of the Port Paducah will inform mariners of enforcement periods by a broadcast notice to mariners.

(c) *Regulations.* (1) In accordance with the general regulations in § 165.23 of this part, entry into this zone is prohibited unless authorized by the Captain of the Port Paducah.

(2) Persons or vessels requiring entry into or passage through must request permission from the Captain of the Port Paducah, or a designated representative. They may be contacted on VHF Channel 13 or 16, or by telephone at (270) 442–1621 ext 350.

(3) All persons and vessels shall comply with the instructions of the Captain of the Port Paducah and designated on-scene U.S. Coast Guard patrol personnel. On-scene U.S. Coast Guard patrol personnel include commissioned, warrant, and petty officers of the U.S. Coast Guard.

Dated: July 13, 2003.

R.C. Johnson,

Commander, Coast Guard, Captain of the Port Paducah.

[FR Doc. 03–19405 Filed 7–29–03; 8:45 am]

BILLING CODE 4910–15–P

ENVIRONMENTAL PROTECTION AGENCY

40 CFR Parts 51 and 52

[Docket No. A–90–37; FRL –7538–1, E–Docket ID No. A–2001–0004 (Legacy Docket ID No. A–90–37)]

Prevention of Significant Deterioration (PSD) and Non-Attainment New Source Review (NSR): Reconsideration

AGENCY: Environmental Protection Agency (EPA).

ACTION: Notice of reconsideration of final rule; request for public comment; notice of public hearing.

SUMMARY: On December 31, 2002 and March 10, 2003, EPA revised regulations governing the major New Source Review (NSR) programs mandated by parts C and D of title I of the Clean Air Act (CAA or Act). Following these actions, the Administrator received a number of petitions for reconsideration. Today, the EPA is announcing our reconsideration of certain issues arising from the final rules of December 31, 2002. We (the EPA) are requesting public comment on six issues for which we are granting reconsideration. The issues are described in section IV of the **SUPPLEMENTARY INFORMATION** section of this preamble. We plan to issue a final decision on these issues and other issues raised in the various petitions by October 28, 2003.

We are only seeking comment on provisions of the major NSR rules as specifically identified in this notice. We will not respond to any comments addressing any other provisions of the NSR rules or program.

DATES: *Comments.* Comments must be received on or before August 29, 2003.

Public Hearing. The public hearing will convene at 9 a.m. and will end after all registered speakers have had an opportunity to speak but no later than 10 p.m. on August 14, 2003. Because of the need to resolve the issues raised in this notice in a timely manner, EPA will not grant requests for extension beyond this date. For additional information on the public hearing and requesting to speak, *see* the **SUPPLEMENTARY INFORMATION** section of this preamble.

ADDRESSES: *Comments.* Comments may be submitted by mail to U.S. Environmental Protection Agency, EPA West (Air Docket), 1200 Pennsylvania Ave., NW., Room: B108, Mail Code: 6102T, Washington, DC, 20460, Attention E-Docket ID No. OAR–2001–0004 (Legacy Docket ID No. A–90–37). Comments may also be submitted electronically, by facsimile, through hand delivery/courier, or by phone.

Public Hearing. A public hearing will be held at the Sheraton Imperial Hotel & Convention Center, 4700 Emperor Boulevard, Durham, North Carolina 27703, telephone (919) 941–5050.

FOR FURTHER INFORMATION CONTACT: Ms. Lynn Hutchinson, Information Transfer and Program Integration Division (C339–03), U.S. Environmental Protection Agency, Research Triangle Park, NC 27711, telephone (919) 541–5795, or electronic mail at *hutchinson.lynn@epa.gov*.

SUPPLEMENTARY INFORMATION:

I. General Information

A. What Are the Regulated Entities?

Entities potentially affected by the subject rule for today's action include sources in all industry groups. The majority of sources potentially affected are expected to be in the following groups.

Industry group	SIC [a]	NAICS [b]
Electric Services	491	221111, 221112, 221113, 221119, 221121, 221122
Petroleum Refining	291	324110
Industrial Inorganic Chemicals	281	325181, 325120, 325131, 325182, 211112, 325998, 331311, 325188
Industrial Organic Chemicals	286	325110, 325132, 325192, 325188, 325193, 325120, 325199
Miscellaneous Chemical Products	289	325520, 325920, 325910, 325182, 325510
Natural Gas Liquids	132	211112
Natural Gas Transport	492	486210, 221210
Pulp and Paper Mills	261	322110, 322121, 322122, 322130
Paper Mills	262	322121, 322122
Automobile Manufacturing	371	336111, 336112, 336211, 336992, 336322, 336312, 336330, 336340, 336350, 336399, 336212, 336213

Industry group	SIC [a]	NAICS [b]
Pharmaceuticals	283	325411, 325412, 325413, 325414

[a] Standard Industrial Classification.
[b] North American Industry Classification System.

Entities potentially affected by the subject rule for today's action also include State, local, and tribal governments that are delegated authority to implement these regulations.

B. How can I Get Copies of This Document and Other Related Information?

1. *Docket.* EPA has established an official public docket for this action under E-Docket ID No. OAR–2001–0004 (Legacy Docket ID No. A–90–37). The official public docket consists of the documents specifically referenced in this action, any public comments received, and other information related to this action. Although a part of the official docket, the public docket does not include Confidential Business Information (CBI) or other information whose disclosure is restricted by statute. The official public docket is the collection of materials that is available for public viewing at the EPA Docket Center, (Air Docket), U.S. Environmental Protection Agency, 1301 Constitution Ave., NW., Room: B108, Mail Code: 6102T, Washington, DC, 20460. The EPA Docket Center Public Reading Room is open from 8:30 a.m. to 4:30 p.m., Monday through Friday, excluding legal holidays. The telephone number for the Reading Room is (202) 566–1742. A reasonable fee may be charged for copying.

2. Electronic Access. You may access this **Federal Register** document electronically through the EPA Internet under the ''**Federal Register**'' listings at *http://www.epa.gov/fedrgstr/*.

An electronic version of a portion of the public docket is available through EPA's electronic public docket and comment system, EPA Dockets. Interested persons may use EPA Dockets at *http://www.epa.gov/edocket/* to submit or view public comments, access the index listing of the contents of the official public docket, and access those documents in the public docket that are available electronically. Once in the system, select ''search,'' then key in the appropriate docket identification number.

Certain types of information will not be placed in the EPA Dockets. Information claimed as CBI and other information whose disclosure is restricted by statute, which is not included in the official public docket, will not be available for public viewing in EPA's electronic public docket. EPA's policy is that copyrighted material will not be placed in EPA's electronic public docket but will be available only in printed, paper form in the official public docket. To the extent feasible, publicly available docket materials will be made available in EPA's electronic public docket. When a document is selected from the index list in EPA Dockets, the system will identify whether the document is available for viewing in EPA's electronic public docket. Although not all docket materials may be available electronically, you may still access any of the publicly available docket materials through the docket facility identified in section I.B.1. EPA intends to work towards providing electronic access to all of the publicly available docket materials through EPA's electronic public docket.

For public commenters, it is important to note that EPA's policy is that public comments, whether submitted electronically or in paper, will be made available for public viewing in EPA's electronic public docket as EPA receives them and without change, unless the comment contains copyrighted material, CBI, or other information whose disclosure is restricted by statute. When EPA identifies a comment containing copyrighted material, EPA will provide a reference to that material in the version of the comment that is placed in EPA's electronic public docket. The entire printed comment, including the copyrighted material, will be available in the public docket.

Public comments submitted on computer disks that are mailed or delivered to the docket will be transferred to EPA's electronic public docket. Public comments that are mailed or delivered to the Docket will be scanned and placed in EPA's electronic public docket. Where practical, physical objects will be photographed, and the photograph will be placed in EPA's electronic public docket along with a brief description written by the docket staff.

For additional information about EPA's electronic public docket visit EPA Dockets online or see 67 FR 38102, May 31, 2002.

C. How and to Whom Do I Submit Comments?

You may submit comments electronically, by mail, by facsimile, through hand delivery/courier, or by phone. To ensure proper receipt by EPA, identify the appropriate docket identification number in the subject line on the first page of your comment. Please ensure that your comments are submitted within the specified comment period. Comments received after the close of the comment period will be marked ''late.'' EPA is not required to consider these late comments. If you wish to submit CBI or information that is otherwise protected by statute, please follow the instructions in section I.D. Do not use EPA Dockets or e-mail to submit CBI or information protected by statute.

1. Electronically. If you submit an electronic comment as prescribed below, EPA recommends that you include your name, mailing address, and an e-mail address or other contact information in the body of your comment. Also include this contact information on the outside of any disk or CD ROM you submit, and in any cover letter accompanying the disk or CD ROM. This ensures that you can be identified as the submitter of the comment and allows EPA to contact you in case EPA cannot read your comment due to technical difficulties or needs further information on the substance of your comment. EPA's policy is that EPA will not edit your comment, and any identifying or contact information provided in the body of a comment will be included as part of the comment that is placed in the official public docket, and made available in EPA's electronic public docket. If EPA cannot read your comment due to technical difficulties and cannot contact you for clarification, EPA may not be able to consider your comment.

a. *EPA Dockets.* Your use of EPA's electronic public docket to submit comments to EPA electronically is EPA's preferred method for receiving comments. Go directly to EPA Dockets at *http://www.epa.gov/edocket*, and follow the online instructions for submitting comments. To access EPA's electronic public docket from the EPA Internet Home Page, select ''Information Sources,'' ''Dockets,'' and ''EPA Dockets.'' Once in the system, select ''search,'' and then key in either Docket

ID No. A–90–37 or E-Docket ID No. OAR–2001–0004 (for which A–90–37 is now a legacy number). The system is an ''anonymous access'' system, which means EPA will not know your identity, e-mail address, or other contact information unless you provide it in the body of your comment.

b. *E-mail*. Comments may be sent by electronic mail (e-mail) to *a-and-r-docket@epamail.epa.gov*, Attention E-Docket ID No. OAR–2001–0004 (Legacy Docket ID No. A–90–37). In contrast to EPA's electronic public docket, EPA's e-mail system is not an ''anonymous access'' system. If you send an e-mail comment directly to the Docket without going through EPA's electronic public docket, EPA's e-mail system automatically captures your e-mail address. E-mail addresses that are automatically captured by EPA's e-mail system are included as part of the comment that is placed in the official public docket, and made available in EPA's electronic public docket.

c. *Disk or CD ROM*. You may submit comments on a disk or CD ROM that you mail to the mailing address identified in section I.C.2. These electronic submissions will be accepted in WordPerfect or ASCII file format. Avoid the use of special characters and any form of encryption.

2. By Mail. Send two copies of your comments to: U.S. Environmental Protection Agency, EPA West (Air Docket), 1200 Pennsylvania Ave., NW., Room: B108, Mail Code: 6102T, Washington, DC, 20460, Attention E-Docket ID No. OAR–2001–0004 (Legacy Docket ID No. A–90–37).

3. By Hand Delivery or Courier. Deliver your comments to: EPA Docket Center, (Air Docket), U.S. Environmental Protection Agency, 1301 Constitution Ave., NW., Room: B108, Mail Code: 6102T, Washington, DC, 20460, Attention Docket ID No. A–90–37. Such deliveries are only accepted during the Docket's normal hours of operation as identified in section I.B.1.

4. By Facsimile. Fax your comments to the EPA Docket Center at (202) 566–1741, Attention Docket ID No. A–2001–0004 (Legacy Docket ID No. A–90–37).

5. By Phone. You may call and leave oral comments on a public comment phone line. The number is (919) 541–0211. EPA will log and place in E-Docket ID No. OAR–2001–0004 (Legacy Docket ID No. A–90–37) any comments received through this phone number.

D. How Should I Submit CBI to the Agency?

Do not submit information that you consider to be CBI electronically through EPA's electronic public docket or by e-mail. Send or deliver information identified as CBI only to the following address: Mr. David Svendsgaard, c/o OAQPS Document Control Officer (C339–03), U.S. Environmental Protection Agency, Research Triangle Park, NC 27711, Attention E-Docket ID No. OAR–2001–0004 (Legacy Docket ID No. A–90–37). You may claim information that you submit to EPA as CBI by marking any part or all of that information as CBI. (If you submit CBI on disk or CD ROM, mark the outside of the disk or CD ROM as CBI and then identify electronically within the disk or CD ROM the specific information that is CBI.) Information so marked will not be disclosed except in accordance with procedures set forth in 40 CFR part 2.

In addition to one complete version of the comment that includes any information claimed as CBI, a copy of the comment that does not contain the information claimed as CBI must be submitted for inclusion in the public docket and EPA's electronic public docket. If you submit the copy that does not contain CBI on disk or CD ROM, mark the outside of the disk or CD ROM clearly that it does not contain CBI. Information not marked as CBI will be included in the public docket and EPA's electronic public docket without prior notice. If you have any questions about CBI or the procedures for claiming CBI, please consult the person identified in the **FOR FURTHER INFORMATION CONTACT** section.

E. What Should I Consider as I Prepare My Comments for EPA?

You may find the following suggestions helpful for preparing your comments.

- Explain your views as clearly as possible.
- Describe any assumptions that you used.
- Provide any technical information and/or data you used that support your views.
- If you estimate potential burden or costs, explain how you arrived at your estimate.
- Provide specific examples to illustrate your concerns.
- Offer alternatives.
- Make sure to submit your comments by the comment period deadline identified.
- To ensure proper receipt by EPA, identify the appropriate docket identification number in the subject line on the first page of your response. It would also be helpful if you provided the name, date, and **Federal Register** citation related to your comments.

F. What Information Should I Know About the Public Hearing?

The public hearing will provide interested parties the opportunity to present data, views, or arguments concerning the issues raised in this notice. Person interested in attending or presenting oral testimony are encouraged to register in advance by contacting Ms. Chandra Kennedy, OAQPS, Integrated Implementation Group, Information Transfer and Program Integration Division (C339–03), U.S. Environmental Protection Agency, Research Triangle Park, NC 27711; telephone number (919) 541–5319 or e-mail *kennedy.chandra@epa.gov* no later than August 11, 2003. Presentations will be limited to 5 minutes each. We will assign speaking times to speakers who make a timely request to speak at the hearing. We will notify speakers of their assigned times by August 13, 2003. We will attempt to accommodate all other persons who wish to speak, as time allows.

The EPA's planned seating arrangement for the hearing is theater style, with seating available on a first come first served basis for about 250 people. Attendees should note that the use of pickets or other signs will not be allowed on hotel property.

As of the date of this announcement, the Agency intends to proceed with the hearing as announced; however, unforeseen circumstances may result in a postponement. Therefore, members of the public who plan to attend the hearing are advised to contact Ms. Chandra Kennedy at the above referenced address to confirm the location and date of the hearing. You may also check our New Source Review Web site at *http://www.epa.gov/nsr* for any changes in the date or location.

The record for this action will remain open until September 15, 2003 to accommodate submittal of information related to the public hearing.

G. Where Can I Obtain Additional Information?

In addition to being available in the docket, an electronic copy of today's notice is also available on the World Wide Web through the Technology Transfer Network (TTN). Following signature by the EPA Administrator, a copy of today's notice will be posted on the TTN's policy and guidance page for newly proposed or promulgated rules at *http://www.epa.gov/ttn/oarpg*. The TTN provides information and technology exchange in various areas of air pollution control. If more information regarding the TTN is needed, call the TTN HELP line at (919) 541–5384.

H. How Is This Preamble Organized?

The information presented in this preamble is organized as follows:

I. General Information
A. What are the regulated entities?
B. How can I get copies of this document and other related information?
1. Docket
2. Electronic Access
C. How and to whom do I submit comments?
1. Electronically
2. By Mail
3. By Hand Delivery or Courier
4. By Facsimile
5. By Phone
D. How should I submit CBI to the Agency?
E. What should I consider as I prepare my comments for EPA?
F. What information should I know about the public hearing?
G. Where can I obtain additional information?
H. How is this preamble organized?
II. Background
III. Today's Action
A. Grant of Reconsideration
B. Request for Stay of Final Rules
IV. Discussion of Issues
A. Analysis of Environmental Impact of Final Rule
B. Plantwide Applicability Limitations (PALs)
1. Background
2. Emission Units for Which you Begin Actual Construction After Baseline Period
3. Elimination of Synthetic Minor Limits [(r)(4) Limits]
C. Actual-to-Projected-Actual Test
1. Background
2. Reasonable Possibility
3. Replacement Units
D. Clean Unit
1. Background
2. Effect of Redesignation on Clean Unit Status
V. Statutory and Executive Order Reviews
A. Executive Order 12866—Regulatory Planning and Review
B. Paperwork Reduction Act
C. Regulatory Flexibility Act (RFA), as amended by the Small Business Regulatory Enforcement Fairness Act of 1996 (SBREFA), 5 U.S.C. 601 *et seq.*
D. Unfunded Mandates Reform Act
E. Executive Order 13132—Federalism
F. Executive Order 13175—Consultation and Coordination with Indian Tribal Governments
G. Executive Order 13045—Protection of Children from Environmental Health Risks and Safety Risks
H. Executive Order 13211—Actions Concerning Regulations That Significantly Affect Energy Supply, Distribution, or Use
I. National Technology Transfer and Advancement Act
VI. Statutory Authority

II. Background

In the early 1990's, the Environmental Protection Agency (''we'' or ''the Agency'') began an effort to revise the major NSR regulations to respond to concerns expressed by regulated industry and State and local permitting authorities that the major NSR regulations were too complex and burdensome. This effort involved the solicitation of ideas and recommendations from the Clean Air Act Advisory Committee and the public. The goal of this effort, known as NSR Reform (or NSR Improvement), was to eliminate as much of the program complexity, administrative burden and resultant project delays as possible without sacrificing the current level of environmental protection and benefits derived from the program.

On July 23, 1996 (61 FR 38250), we proposed changes to various aspects of the NSR program based primarily on consideration of recommendations provided through the NSR Reform effort, but also based on our own independent initiatives to further clarify the major NSR program. The proposed changes addressed baseline emission determinations, actual-to-future-actual emissions measurement methodology, Plantwide Applicability Limitations (PALs), Clean Units, and Pollution Control Projects (PCPs), as well as other changes.

Following the 1996 proposal, we held two public hearings and more than 50 stakeholder meetings. Environmental groups, industry, and State, local, and Federal agency representatives participated in these many discussions. We received several hundred public comments on the 1996 proposal rule. As a result of comments received and further review of the issues by the Agency, we sought further comment on some issues in the proposed rule. On July 24, 1998, we published a **Federal Register** Notice of Availability (NOA) that requested additional comment on three of the proposed changes—baseline emissions determination, the actual-to-future-actual-methodology, and PALs. We received several hundred public comments on the NOA. Following the NOA, we convened various stakeholder meetings concerning NSR Reform over a number of years. Information on these meetings can be found in Docket ID No. A–90–37.

On December 31, 2002, we issued a final rule (67 FR 80186) that revised regulations governing the major NSR programs (final rules).[1] The revisions included five major changes to the major NSR program that will reduce burden, maximize operating flexibility, improve environmental quality, provide additional certainty, and promote administrative efficiency. These elements include baseline actual emissions, actual-to-projected-actual emissions methodology, PALs, Clean Units, and PCPs. The final rules also codified our longstanding policy regarding the calculation of baseline emissions for electric utility steam generating units (EUSGUs). In addition, the final action: (1) Responded to comments we received on a proposal to adopt a methodology, developed by the American Chemistry Council (formerly known as the Chemical Manufacturers Association (CMA)) and other industry petitioners, to determine whether a major stationary source has undertaken a major modification based on its potential emissions; and (2) included a new section that spells out in one place how a major modification is determined under the various major NSR applicability options. This topic had previously been addressed primarily in the definition section of the major NSR regulations. We also clarified where to find the provisions in the revised rules and codified a definition of ''regulated NSR pollutant'' that clarifies which pollutants are regulated under the Act for purposes of major NSR.

On February 28, 2003, we sent notice to affected States that, consistent with our proposal in 1996, we were revising the references to 40 CFR 52.21 in delegated States' plans to reflect the December 31, 2002 changes to the Prevention of Significant Deterioration (PSD) Federal Implementation Plan (FIP) (40 CFR 52.21(a)(2) and (b) through (bb)). This FIP applies in any area that does not have an approved PSD program in the State Implementation Plan (SIP), and in all Indian country. The notice was subsequently published in the **Federal Register** on March 10, 2003 (68 FR 11316).

Following publication of the December 31, 2002 and March 10, 2003 **Federal Register** notices, the Administrator received numerous petitions, filed pursuant to section 307(d)(7)(B) of the CAA, requesting reconsideration of many aspects of the final rules.[2] The purpose of today's

[1] The December 31, 2002 first rules did not act on several issues proposed in 1996. We intend to act on some or all issues from the 1996 proposal in a subsequent **Federal Register** notice.

[2] Petitions for reconsideration of the December 31, 2002 final rule were filed by: Northeastern States (CT, ME, MD, MA, NH, NJ, NY, PA, RI, VT); South Coast Air Quality Management District (CA); and Environmental Groups (led by NRDC, Earthjustice, Clean Air Task Force, and Environmental Defense). Additional petitions joined existing petitions: The People of California and California Air Resources Board (joined South Coast and Northeastern States petitions); Yolo-Solano Air Quality Management District (CA)

Continued

notice is to initiate a process for responding to several issues raised in these petitions.

III. Today's Action

A. Grant of Reconsideration

At this time, we have decided to grant reconsideration on six issues raised by petitioners.[3] The first involves a document we released in November 2002, entitled, ''Supplemental Analysis of the Environmental Impact of the 2002 Final NSR Improvement Rules.''[4] This analysis provides the Agency and other interested parties with additional information on the environmental effects of the final rules. The analysis shows that the final rules will result in greater emissions reductions than the former program. Petitioners assert that the final rules are flawed because we did not rely on this document in promulgating the rule and hence that we promulgated the final rule without having adequately evaluated its environmental impacts. In the alternative, they assert that, to the extent we relied on the analysis for that assessment, we did so improperly because we did not make the analysis available for public comment. Petitioners further assert that our analysis does not properly analyze the environmental effects of the rule and did not take into account recent information about the health impacts of air pollution and the effects of the final rule on air pollutant emissions.[5]

We disagree with Petitioners' assertions. During the rulemaking process, we strived to take into consideration relevant and reliable information on environmental effects. We did in fact take account of environmental considerations in formulating the final rules, and believe the final rules are properly supported and justified in this regard. However, we want Petitioners and others to have every opportunity to comment on the work that we have done to date and to provide additional information that they believe to be relevant to the inquiry. For these reasons, we have chosen to grant the petitions as they relate to these issues. In short, we have no reason to believe our analysis of environmental effectiveness is incorrect or flawed. Nevertheless, we do think the supplemental analysis provides additional support for the final rules, so we are making it available for public comment, and we will reevaluate our conclusions in light of the comments and information submitted.

The remaining issues for which we grant reconsideration involve five narrow aspects of the final rule. For each of the five, Petitioners claim that the final provision did not sufficiently reflect the ideas set forth in the proposed rule and, therefore, that they did not have an adequate opportunity to provide input during the designated public comment period. Without prejudging the information that will be provided in response to this notice, we note that to date Petitioners have not provided information which persuades us that our final decisions are erroneous or inappropriate. While we do not agree with Petitioners' claim, we have decided to grant reconsideration on these issues in an interest of ensuring a full opportunity for comment. Each of these issues is described in detail below.

Our final decision on reconsideration for all the remaining issues in the petitions for reconsideration will be issued no later than the date by which we take final action on the issues for which we have decided to grant reconsideration. We plan to take final action on all issues no later than 90 days after publication of today's notice.

B. Request for Stay of Final Rules

We are not granting a stay of the final rules pending our reconsideration of these issues. Under sections 307(b)(1) and 307(d)(7)(B) of the Act, the effectiveness of the final rules is not automatically postponed by our granting the petitions for reconsideration on certain issues. The Administrator (or the court), however, may stay the rules pending our reconsideration for a period not to exceed three months. 42 U.S.C. 7607(d)(7)(B). Petitioning States and Environmental Groups requested that we exercise our discretion under this section and grant a stay of the final rules during reconsideration.[6]

We do not believe that a stay is warranted. We believe that the final rules are a reasonable exercise of our discretion under the CAA, and will result in greater emission reductions compared to the former program.[7] Moreover, although we have decided to reconsider certain aspects of the final rules, at this time we do not have reason to believe that the substantive decisions reflected in the final rule are erroneous. We are also concerned about the impact of a stay on facilities located in delegated States. The new requirements are currently in effect in these areas. We believe that it would be inappropriate to revert to the former program when it is likely that the current program would be reinstated 60 to 90 days later. Further, we do not believe our decision to deny a stay will have any significant effect on facilities subject to a SIP-approved major NSR program. We have provided these States up to three years to make appropriate changes to their SIP-approved programs. We intend to complete our reconsideration of the final rules regarding the issues discussed in this **Federal Register** notice quickly (*i.e.*, in approximately 90 days), thus, any uncertainty regarding the final rules caused by our partial granting of the petitions for reconsideration will be for a short period. States will still have ample time after our final decision on reconsideration to revise their SIPs to implement the rule (and any changes resulting from our reconsideration). As a result, we do not think it would be appropriate to stay the effectiveness of the rule while we address a few issues raised in the petitions.[8]

IV. Discussion of Issues

A. Analysis of Environmental Impact of Final Rule

In November 2002, we released a document entitled, ''Supplemental Analysis of the Environmental Impact of the 2002 Final NSR Improvement Rules.'' As we noted at that time, the analysis was intended to provide the interested public with supplemental information on the potential environmental effects of the NSR Improvement rules that we were finalizing.

In the supplemental environmental analysis, we found that the overall effect of the final rule would be a net benefit to the environment compared to the

(joined South Coast petition); Santa Barbara, Ventura, and Monterey Air Pollution Control Districts (CA); and Sacramento Air Quality Management District (CA) (joined South Coast petition). Petitions for reconsideration of the FIP rule were filed by: Delegated States (CA, CT, IL, MA, NJ, NY, DC, South Coast Air Quality Management District (CA), and Santa Barbara Air Pollution Control District (CA)); and Environmental Groups (essentially the same groups that filed petitions to reconsider the December 31, 2002 rule).

[3] In this notice, the term ''petitioners'' refers only to those entities that filed petitions for reconsideration with EPA.

[4] Available through our NSR website at *http://www.epa.gov/nsr* and in docket ID No. A–90–37, Document IV–A–7.

[5] *See. e.g.,* Environmental Groups petition at 25: Northeastern States petition at 5, 6.

[6] *See* Environmental Groups petition at 1, 145; Northeastern States petition at 47.

[7] *See* EPA'S Response to Emergency Motion For Stay of the New Source Review Rule (Feb. 21, 2003) (D.C. Cir. Docket No. 02–1387); *see also* Supplemental Analysis of the Environmental Impact of the 2002 Final NSR Improvement Rules (EPA Docket ID No. A–90–37; Document IV–A–7).

[8] If during the course of reconsideration we determine that significant aspects of the final NSR rules should be revised, we could reevaluate whether to stay the effectiveness of the rules, or portions thereof, pending issuance of our final decision on reconsideration.

former NSR rules because the final rule would result in reductions in emissions of air pollution. We found that four of the five provisions in the final rule would result in environmental benefits, and the other provision would have no significant effect. Specifically, for each of the rule's five provisions, the analysis concludes the following:

(1) The PAL provisions will result in tens of thousands of tons per year (tpy) of volatile organic compounds (VOC) reductions from just three industrial categories where PALs are likely to be used most often. Overall reductions will be greater because it is likely that PALs also will be adopted in other source categories.

(2) The Clean Unit Test will be environmentally neutral for most sources, but some sources will likely control emissions earlier or more extensively than under the former rules, and, as a result, a net benefit will occur. The amount of this benefit is uncertain nationally, but likely will be significant in individual cases, like the estimated 9,300 tpy reduction in smog-causing VOC seen in one example.

(3) The PCP Exclusion will lead to a small increase in the number of environmentally beneficial projects because it removes NSR barriers to such projects. The amount of this benefit is uncertain nationally, but will likely be relatively small.

(4) The portion of the rule addressing baseline actual emissions will not have a significant environmental impact. The former program already allowed sources to use a more representative baseline period, with the approval of the reviewing authority, instead of the two-year period before the change specifically delineated in the former rules. The final rules provide an expanded time frame from which you may select a representative baseline but eliminate the option of going beyond this period of time. While the new rules may allow a small number of existing emissions units to use higher baselines, other units will be required to use lower baselines due to the requirement to adjust the baseline downward to account for any new emission limitations at that emissions unit. The changes overall impact will be small because the portion of the rule addressing baseline actual emissions does not affect new sources, new units built at existing sources, electric utilities, and many modified sources.

(5) The change to the actual-to-projected-actual test will have a net environmental benefit, but a relatively small one. The benefit stems from removing: (1) Incentives to keep actual emissions high before making a change, and (2) barriers to projects that will reduce emissions. The size of this benefit nationally is uncertain. Its impact would be small because the change in emissions calculation methodology does not affect either of the following: (1) New sources, new units built at existing industrial facilities, and electric utilities, or (2) any modifications at existing facilities that actually result in significant increases in emissions. Historically, under the previous major NSR rule, virtually all other sources making a physical or operational change have accepted ''permit limits'' so as to be confident that they will not trigger major NSR. Our analysis concludes that the benefits from this aspect of the program are likewise largely unaffected because such sources must still assure that actual emissions do not significantly increase as a result of a change.

The supplemental environmental analysis uses quantitative information where possible but also notes limitations on our ability to quantify impacts of the rule. We used qualitative information to supplement the analysis when such limitations are present. We also noted that the final rules will result in economic benefits that stem from improved flexibility, increased certainty, and reduced administrative burden. These benefits are important, but were not quantified as part of this environmental analysis.

The analysis is available in the docket for today's action and is also available on the Internet at *http://www.epa.gov/nsr.* We request comment on all aspects of the environmental impact of the final rule.

B. Plantwide Applicability Limitations (PALs)

1. Background

The December 31, 2002 final major NSR rule included an innovative approach to managing major NSR applicability at major stationary sources based on actual plantwide annual emissions. Under these provisions, an owner or operator (you) of a major stationary source (source) may elect to establish a source-wide cap on emissions, known as a ''plantwide applicability limitation'' (PAL), based on your source's baseline actual emissions. As long as you do not exceed this ''actuals PAL,'' a significant emissions increase has not occurred. Without a significant emissions increase, no change at your facility is considered a major modification, and you are not subject to major NSR.

Today, we are soliciting comment on two aspects of the PAL final rules. These issues are discussed below.

2. Emission Units for Which You Begin Actual Construction After the Baseline Period

In general, the PAL level is established as the sum of the baseline actual emissions of the PAL pollutant for each emissions unit at your major stationary source. The baseline period may be any consecutive 24-month period during the preceding 10 years, but you must use the same baseline period for all existing emissions units. However, the final rules contain special provisions for an emissions unit on which you began actual construction after the 24-month baseline period. The reviewing authority must use the potential to emit (PTE) of such emissions units in establishing the PAL. *See* 40 CFR 51.165(f)(6), 51.166(w)(6), 52.21(aa)(6). This provision is intended to serve as a counterpart to the requirement to exclude from the PAL level any emissions from emissions units that were permanently shut down after the baseline period.

We included these provisions in recognition that the set of emissions units at your source at the time of PAL permit issuance may be different from the set of emissions units that existed during the baseline period. You may have constructed additional emissions units, permanently shut down previously existing emissions units, or both. The actuals PAL rule is designed to ensure that the PAL level is adjusted to reflect the present-day configuration of emissions units at your source. Thus, it instructs the reviewing authority to exclude from the PAL level emissions from permanently shut down units and to add to the PAL level the PTE of emissions units on which you began actual construction after the baseline period.

We considered applying the procedures for determining baseline actual emissions at 40 CFR 51.165(a)(1)(xxxv), 51.166(b)(47), and 52.21(b)(48); however, under these procedures the baseline actual emissions of the existing emissions units on which you began actual construction after the selected baseline period would be zero. When these procedures are used for determining applicability of the major NSR requirements, we believe this is an appropriate outcome because such determinations ordinarily involve a limited set of emissions units (those that are part of a modification) at the major stationary source and issues related to start up and shutdown of emissions

units are typically not implicated. You have the ability to choose the 24-month baseline period that accommodates the integrated operations of this limited set of emissions units. Moreover, the baseline actual emissions are only used as a measure to determine whether a project will trigger major NSR review. It is not used as an enforceable restriction on the ability of the emissions units to operate.

In contrast, setting a PAL involves all of the emissions units at the major stationary source. Selecting a single 24-month period that accommodates the integrated operations of all of these emissions units is more difficult and will often involve emission units that start up or shut down after the baseline period. Moreover, establishing a baseline actual emissions of zero is an unrealistic reflection of how the emissions unit will be operated and could require you to unreasonably restrict operations at the major stationary source to ensure you comply with the PAL.

We also considered but rejected several other approaches. First, we considered requiring you to use the immediately preceding 24 months to establish an average annual emissions rate for such emissions units, or requiring all existing emissions units to follow this approach. However, as discussed in the December 31, 2002 preamble (67 FR 80191), this approach does not account for normal fluctuations in operations and may not be representative of source operations.

We also considered making no adjustments for either shut down emissions units or newly constructed emissions units, but this approach seemed to be least representative of a major stationary source's current operations. And finally, we considered allowing you to select different 24-month periods for each existing emissions unit at the major stationary source or allowing you to select any 24-month period since operations began for the recently constructed emissions units.

We believe that the former approach would unnecessarily complicate the procedures for establishing PALs and allow you to inappropriately maximize source-wide emissions. The latter approach has some advantage in that it provides a measure of past emissions; however, we rejected this approach in favor of using the PTE of the emissions unit. This is because we believe that most emissions units that have been constructed after the baseline period are likely to have undergone major or minor NSR review.[9] Thus, the PTE of the emissions unit reflects requirements to comply with recent control technology requirements and other emission limitations that are representative of how you intend to actually operate the emissions unit. The past emissions of such emissions units, when measured over a shortened period of time, may not be representative of intended operations.

In view of all of these considerations, we believe that including the PTE of the emissions unit in the PAL baseline is the most appropriate measure of actual operations of such emissions units for the purpose of establishing an enforceable limitation on your operations. We believe such a provision falls within the discussion of PALs in the proposed rule. Nevertheless, we request comment on this approach, the approaches we rejected, and any other method for assessing emissions from these emissions units.

3. Elimination of Synthetic Minor Limits [(r)(4) Limits]

A synthetic minor limit is a limit that is included in a permit by a reviewing authority at the request of a source to reduce the potential to emit (PTE) of a facility or emissions unit below a level that would otherwise subject the facility or emissions unit to some regulatory requirement. Such limits are often used by a facility to reduce emissions below a level that would subject a project to the major NSR requirements. (They are also used for similar purposes under other regulatory programs.)

Under the major NSR program, we refer to these emission or operational limitations as (r)(4) limits because provisions relating to these types of restrictions are contained in paragraph (r)(4) of the Federal Prevention of Significant Deterioration (PSD) Program. *See* 40 CFR 52.21(r)(4). Similar provisions are contained in the requirements for State programs. *See* 40 CFR 52.165(a)(5)(ii), 51.166(r)(2).

In the December 31, 2002 final rule, we specified that a reviewing authority can eliminate (r)(4) limits for a PAL pollutant if you previously took these limits to avoid major NSR. In the absence of a PAL, relaxation of such limits would cause you to determine major NSR applicability as if construction had not yet commenced on the new or modified emissions units. *See* 40 CFR 52.165(a)(5)(ii), 51.166(r)(2), 52.21(r)(4). Under a PAL, such limits may be relaxed or removed without triggering major NSR for the PAL pollutant. 67 FR 80210; 40 CFR 165(f)(1)(iii)(C), 166(w)(1)(ii)(c), 52.21(aa)(1)(ii)(c). The (r)(4) limits do not reappear upon PAL expiration. 67 FR 80209; 40 CFR 51.165(f)(9)(v), 51.166(w)(9)(v), 52.21(aa)(9)(v). Instead, they are reapportioned, along with the PAL, among the existing emissions units. We believe the approach adopted in the final rules reflect the purpose of a PAL, which is to maximize operational flexibility without sacrificing environmental protection.

We view the PAL as the functional substitute for any unit-specific (r)(4) limits that you may have taken to reduce emissions below a level that would subject a project to major NSR requirements. Both the PAL and the (r)(4) limits serve to keep you from triggering major NSR. Emissions from emissions units with (r)(4) limits are incorporated into the PAL at a level that is at or, in most cases, below those limits. Therefore, the PAL is an effective substitute for those limits. More importantly, we believe that removal of these limits is essential to allow you to benefit from the operational flexibility and corresponding environmental benefits that the PAL is intended to provide.

We considered reinstating (r)(4) limits if a PAL expires. However, we rejected this approach because we recognize that you may have made changes to the emissions unit or associated operations, and it may not be practical to return the emissions unit to its pre-PAL operations. Instead, the final rules ensure that the (r)(4) limitations that are incorporated into the PAL continue to play a role after PAL expiration, although not in the same form.

Before a PAL expires, you must submit a proposal for distributing the PAL among individual emissions units or groups of emissions units. The reviewing authority will make the final decision on PAL emissions distribution. Following expiration, you must ensure that the individual emissions units or groups of emissions units comply with their limits as assigned by the reviewing authority. In this way, the emission restrictions associated with an (r)(4) limitation are accounted for after PAL expiration. However, the new emission limitation(s) would not be subject to the requirements of 40 CFR 52.21(r)(4).

[9] In 1997, we conducted an informal review of several State minor NSR programs. While this report is still considered draft, it provides a good overview of the types ofr requirements contained in many State minor NSR requirements and serves to confirm our belief that many projects that are not subject to major NSR review will be required to comply with requirements under State minor NSR programs. We have included a copy of this draft report in the docket for today's action and invite comment on whether this document accurately reflects State or local requirements.

We are proposing to retain our approach for removing and superseding (r)(4) limits with a PAL. We request comment on this approach.

C. Actual-to-Projected-Actual Test

1. Background

In 1996, we proposed to allow use of the ''future-actual methodology'' to compute whether a physical change in or change in the method of operation of the major stationary source would result in a significant emissions increase. Previously, this methodology was only available to EUSGUs under the WEPCO rule.[10] Our 1996 notice proposed to extend a version of the WEPCO rule to all source categories. In that proposal, we sought comment on several issues including whether the 5-year reporting provision is working as intended and whether it should be changed in any way. We adopted a modified WEPCO approach in the final rules. We call this approach the ''actual-to-projected-actual'' applicability test. This test is similar to the WEPCO rule in that it allows you to consider ''demand growth'' in determining post-change emissions, but it contains recordkeeping and reporting requirements that differ from those in the WEPCO rule.[11] (There are other differences between the two approaches, but these differences are not relevant to the following discussions.)

Today, we are soliciting comments on an issue related to the recordkeeping and reporting requirements under the actual-to-projected-actual applicability test and on allowing replacement units to use the actual-to-projected-actual applicability test. These issues are discussed below.

2. Reasonable Possibility

As noted above, the recordkeeping and reporting requirements in the final rules differ from those in the WEPCO rule. The WEPCO rules required EUSGUs that relied on the actual-to-representative-future-actual-annual emissions test to submit annual emission reports. In contrast, the final rules require non-EUSGUs (that project future emissions rather than relying on potential emissions as a measure of future emissions) to: maintain certain records related to the emissions projection and records of the post-change emissions (for either 5 years or 10 years depending on the nature of the change); and report if there is a significant emission increase in post-change emissions which is inconsistent with the source's preconstruction projection.[12] For EUSGUs (that project future emissions rather than relying on potential emissions as a measure of future emissions), the final rules require you to send a copy of the information to the reviewing authority that you are required to keep relating to your projection. However, all of these reporting and recordkeeping requirements apply to non-EUSGUs and EUSGUs only if there is a ''reasonable possibility'' that the project will result in a significant emissions increase.

We included these changes to respond to comments we received in response to our request for comments on whether the 5-year reporting provisions of the WEPCO rule were working as intended and whether these requirements should be changed. Some commenters indicated that the 5-year recordkeeping and reporting requirements were onerous. Commenters also noted that the requirements were unnecessary because similar information is available through the title V permitting program and State emission inventories. Other commenters requested that we retain an option to use the actual-to-potential approach, which does not require recordkeeping or reporting. We retained that option within the actual-to-projected-actual applicability test.

In 1998, we solicited additional comment on an approach that would have required you to obtain a federally enforceable permit to limit your post-change emissions to your projected levels (the actual-to-future-enforceable-actual test), and again solicited comment on the appropriate recordkeeping and reporting requirements. In general, commenters were supportive of a 5-year recordkeeping requirement. Responses were mixed as to whether we should extend the requirement to 10 years if the permitting authority believed it appropriate. Again, we received comments that reporting and recordkeeping requirements were duplicative of those required by other programs. Also, we received comments from State agencies concerned with the resource burden that would be imposed by requirements of the actual-to-future-actual test.

In an effort to balance the need for information to determine compliance and the associated burden of recordkeeping and reporting, we finalized the changes to the proposed recordkeeping and reporting requirements. We included the ''reasonable possibility'' provision because we were concerned that without some qualifier on when you need to retain records and report, our rules would encompass any physical or operational change you undertake no matter how inconsequential and unlikely that an emissions increase would result.

We believe that, in some circumstances, the requirements to record and report emissions following completion of certain types of projects is a substantial strengthening over the former regulatory requirements that applied to non-EUSGUs. The former rules contained no reporting or recordkeeping requirements when you determined that major NSR did not apply. For example, the former rules allowed you to make your own determination as to whether major NSR applied to a project. If you determined that an emissions increase from a project was less than significant, you could proceed with the project, and there were no subsequent recordkeeping or reporting requirements under the major NSR program. The same result occurred if you determined your project would result in a significant emissions increase but you were able to ''net'' the project out of review. Under the revised rules, if you project future emissions rather than relying on potential emissions as a measure of future emissions, you (whether an EUSGU or non-EUSGU) are required to record and report any project for which you avoid the major NSR requirements through ''netting,'' because you will have already determined that such projects will result in a significant emissions increase.

We are proposing to retain the ''reasonable possibility'' requirement for triggering the applicability of the recordkeeping and reporting provisions discussed above. We believe these provisions are appropriate based on our proposal and the comments received thereon; nevertheless, we are requesting comment on this approach.

3. Replacement Unit

The WEPCO rule precluded use of the actual-to-representative-future-actual-annual emissions test for replacement units. *See* 40 CFR 52.21(b)(921)(v)(2002). Although the

[10] *See* 57 FR 32314, July 21, 1992. This rule is called the ''WEPCO rule'' because a court case involving the Wisconsin Power and Electric Company (WEPCO) was the reason behind the rulemaking.

[11] We use the term ''demand growth'' to refer broadly to independent factors that may cause remissions increases from an emission unit, but which the emissions unit could have accommodated during the consecutive 24-month period used to establish the baseline actual emissions, and that are also unrelated to the particular project.

[12] If you rely on potential emissions as a measure of future emissions, you have no recordkeeping requirements related to your applicability determination under the final rules.

1996 preamble recognized this preclusion in our discussion of extending the WEPCO rule to other industrial sectors, *see* 62 FR 38267, the proposed regulatory language removed the preclusion and would have allowed all emissions units (EUSGUs and non-EUSGUs), including replacement units, to use the actual-to-future-actual emissions test. *See* proposed 40 CFR 52.21(b)(21)(ii), 61 FR 38338.

In the final rules, we concluded we should not preclude use of the actual-to-projected-actual test either for EUSGUs or non-EUSGUs replacement units. We explained the basis for our conclusion in the final rule. *See* 67 FR 80194. Although we discussed this issue in the proposal, we are seeking comment on our determination on this issue and the basis for it set forth in the preamble to the final rules.

D. Clean Unit

1. Background

Our December 31, 2002 final rules finalize provisions that provide added flexibility to emissions units that install state-of-the-art emissions controls. Specifically, we promulgated a new type of major NSR applicability test for emissions units that are designated as Clean Units.

The Clean Unit applicability test (''Clean Unit Test'') measures whether an emissions increase occurs, based on whether a project affects the Clean Unit status of the emissions unit. The Clean Unit Test provides that when you meet emission limitations based on installing state-of-the-art emissions control technologies (add-on controls, pollution prevention, or work practices) that are determined to be BACT or LAER (or comparable to BACT or LAER), you may make any physical or operational change to the unit without triggering major NSR, provided that the change does not (1) necessitate a revision in the emission limitations or work practice requirements in the permit for the unit that were adopted in conjunction with BACT, LAER, or Clean Unit determinations; or (2) alter any physical or operational characteristics that formed the basis for the BACT, LAER, or Clean Unit determination for the unit.

Today, we are requesting comment on one aspect of the final rules for Clean units. This issue is discussed below.

2. Effect of Redesignation on Clean Unit Status

The final rules allow you to maintain Clean Unit status at an emissions unit even if the area in which you are located was attainment for the pollutant at the time the emissions unit was designated clean but is subsequently redesignated to nonattainment. Our 1996 proposal did not specifically address this issue. It did, however, propose that Clean Unit status would presumptively apply for the 10 years following issuance of the major NSR permit, and it did not indicate that the presumption would be revoked if the area was redesignated. Therefore, we believe a natural implication of the proposal is that the Clean Unit status would presumptively continue to apply even if the area were redesignated.

We continue to believe that you should be allowed to maintain your Clean Unit status even if your area is redesignated from attainment to nonattainment for the pollutant for which your emissions unit is designated clean. This approach is most consistent with our current practices and fundamental to the policy of creating incentives to reduce emissions.

As a general rule, permitting decisions are not *per se* invalid, or retroactively changed by virtue of a change in an area's attainment status. For example, we do not require sources that have applied BACT to upgrade controls to comply with LAER or obtain offsets when an area's designation changes.

Moreover, a fundamental premise in creating the Clean Unit Test is to provide you with an incentive to install better emissions control technologies even when there is no State, local or Federal regulation requiring this level of control. We believe that this incentive will be undermined if you are unable to know with certainty that the added flexibility will be available to you for the full 10-year period.

We also believe that this approach is consistent with the Clean Air Act. The requirements of section 173 of the Act, including the requirements to apply LAER and obtain offsets, apply only if a project will result in an emissions increase. As long as an emissions unit maintains its status as a Clean Unit, it has not increased emissions. Thus, the provisions of section 173 do not apply to such emissions units.

Finally, because States will have established the Clean Units either through the major NSR permitting process or another permitting process, the State will be aware of which emissions units qualify as Clean Units at the time an area is redesignated. Thus, States that are concerned that Clean Units may have adverse impact on their attainment demonstrations if the full effect of their potential emissions is realized are able to make appropriate adjustments in their attainment demonstrations to account for these permitted emissions. In this respect, we believe that the Clean Unit Test provides States with a better planning tool than may otherwise exist in the absence of the Clean Unit Test.

As noted above, we proposed in 1996 that an emission unit's Clean Unit status would remain in place for 10 years, and implicitly indicated that nonattainment redesignation would not affect the unit's status during that 10 years. We, however, request comment on this approach and the rationale set forth above.

V. Statutory and Executive Order Reviews

On December 31, 2002, we finalized rule changes to the regulations governing the NSR programs mandated by parts C and D of title I of the Act. With today's action we are proposing no changes to the final rules, and are seeking additional comments on some of the provisions finalized in the December 2002 **Federal Register** notice (67 FR 80186). Accordingly, we believe that the rationale provided with the final rules is still applicable and sufficient.

A. Executive Order 12866—Regulatory Planning and Review

Under Executive Order 12866 (58 FR 51735, October 4, 1993), the Agency must determine whether the regulatory action is ''significant'' and therefore subject to Office of Management and Budget (OMB) review and the requirements of the Executive Order. The Order defines ''significant regulatory action'' as one that is likely to result in a rule that may:

(1) Have an annual effect on the economy of $100 million or more or adversely affect in a material way the economy, a sector of the economy, productivity, competition, jobs, the environment, public health or safety, or State, local, or tribal governments or communities;

(2) Create a serious inconsistency or otherwise interfere with an action taken or planned by another agency;

(3) Materially alter the budgetary impact of entitlements, grants, user fees, or loan programs, or the rights and obligations of recipients thereof; or

(4) Raise novel legal or policy issues arising out of legal mandates, the President's priorities, or the principles set forth in the Executive Order.

Pursuant to the terms of Executive Order 12866, OMB has notified EPA that it considers this a ''significant regulatory action'' within the meaning of the Executive Order. EPA has submitted this action to OMB for review. Changes made in response to

OMB suggestions or recommendations will be documented in the public record.

B. Paperwork Reduction Act

This action does not impose any new information collection burden. We are not proposing any new paperwork (*e.g.*, monitoring, reporting, recordkeeping) as part of today's notice. With this action we are seeking additional comments on some of the provisions finalized in the December 2002 **Federal Register** Notice (67 FR 80186). However, OMB has previously approved the information collection requirements contained in the existing regulations [40 CFR Parts 51 and 52] under the provisions of the Paperwork Reduction Act, 44 U.S.C. 3501 *et seq.*, and has assigned OMB control number 2060–0003, EPA ICR number 1230.11. A copy of the OMB approved Information Collection Request (ICR) may be obtained from Susan Auby, Collection Strategies Division; U.S. Environmental Protection Agency (2822T); 1200 Pennsylvania Ave., NW., Washington, DC 20460 or by calling (202) 566–1672.

Burden means the total time, effort, or financial resources expended by persons to generate, maintain, retain, or disclose or provide information to or for a Federal agency. This includes the time needed to review instructions; develop, acquire, install, and utilize technology and systems for the purposes of collecting, validating, and verifying information, processing and maintaining information, and disclosing and providing information; adjust the existing ways to comply with any previously applicable instructions and requirements; train personnel to be able to respond to a collection of information; search data sources; complete and review the collection of information; and transmit or otherwise disclose the information.

An agency may not conduct or sponsor, and a person is not required to respond to, a collection of information unless it displays a currently valid OMB control number. The OMB control numbers for EPA's regulations in 40 CFR are listed in 40 CFR part 9.

C. Regulatory Flexibility Act (RFA), as Amended by the Small Business Regulatory Enforcement Fairness Act of 1996 (SBREFA), 5 U.S.C. 601 et seq.

The RFA generally requires an agency to prepare a regulatory flexibility analysis of any rule subject to notice and comment rulemaking requirements under the Administrative Procedure Act or any other statute unless the agency certifies that the rule will not have a significant economic impact on a substantial number of small entities. Small entities include small businesses, small organizations, and small governmental jurisdictions.

For purposes of assessing the impacts of today's notice on small entities, small entity is defined as: (1) A small business that is a small industrial entity as defined in the U.S. Small Business Administration (SBA) size standards. (*See* 13 CFR 121.201); (2) a small governmental jurisdiction that is a government of a city, county, town, school district, or special district with a population of less than 50,000; or (3) a small organization that is any not-for-profit enterprise that is independently owned and operated and is not dominant in its field.

After considering the economic impacts of today's notice on small entities, I certify that this action will not have a significant economic impact on a substantial number of small entities. In determining whether a rule has a significant economic impact on a substantial number of small entities, the impact of concern is any significant adverse economic impact on small entities, since the primary purpose of the regulatory flexibility analyses is to identify and address regulatory alternatives ''which minimize any significant economic impact of the proposed rule on small entities.'' 5 U.S.C. sections 603 and 604. Thus, an agency may certify that a rule will not have a significant economic impact on a substantial number of small entities if the rule relieves regulatory burden, or otherwise has a positive economic effect, on all of the small entities subject to the rule. A Regulatory Flexibility Act Screening Analysis (RFASA), developed as part of a 1994 draft Regulatory Impact Analysis (RIA) and incorporated into the September 1995 ICR renewal analysis, showed that the changes to the NSR program due to the 1990 Clean Air Act amendments would not have an adverse impact on small entities. This analysis encompassed the entire universe of applicable major sources that were likely to also be small businesses (approximately 50 ''small business'' major sources). Because the administrative burden of the NSR program is the primary source of the NSR program's regulatory costs, the analysis estimated a negligible ''cost to sales'' (regulatory cost divided by the business category mean revenue) ratio for this source group. Currently, and as reported in the current ICR, there is no economic basis for a different conclusion.

We believe the rule changes in the December 31, 2002 final rule will reduce the regulatory burden associated with the major NSR program for all sources, including all small businesses, by improving the operational flexibility of owners and operators, improving the clarity of requirements, and providing alternatives that sources may take advantage of to further improve their operational flexibility. We do not expect that today's action will change our overall assessment of regulatory burden so substantially as to result in a significant adverse impact on any source. As a result, we do not expect that today's action will result in a significant adverse impact on any small entity.

We continue to be interested in the potential impacts of today's action on small entities and welcome comments on issues related to such impacts.

D. Unfunded Mandates Reform Act

Title II of the Unfunded Mandates Reform Act of 1995 (UMRA), Public Law 104–4, establishes requirements for Federal agencies to assess the effects of their regulatory actions on State, local, and tribal governments and the private sector. Under section 202 of the UMRA, EPA generally must prepare a written statement, including a cost-benefit analysis, for proposed and final rules with ''Federal mandates'' that may result in expenditures to State, local, and tribal governments, in the aggregate, or to the private sector, of $100 million or more in any 1 year. Before promulgating an EPA rule for which a written statement is needed, section 205 of the UMRA generally requires EPA to identify and consider a reasonable number of regulatory alternatives and adopt the least costly, most cost effective or least burdensome alternative that achieves the objectives of the rule. The provisions of section 205 do not apply when they are inconsistent with applicable law. Moreover, section 205 allows EPA to adopt an alternative other than the least costly, most cost effective or least burdensome alternative if the Administrator publishes with the final rule an explanation as to why that alternative was not adopted. Before EPA establishes any regulatory requirements that may significantly or uniquely affect small governments, including tribal governments, it must have developed under section 203 of the UMRA a small government agency plan.

The plan must provide for notifying potentially affected small governments, enabling officials of affected small governments to have meaningful and timely input in the development of EPA regulatory proposals with significant Federal intergovernmental mandates, and informing, educating, and advising

small governments on compliance with the regulatory requirements.

We have determined that today's notice does not contain a Federal mandate that may result in expenditures of $100 million or more for State, local, and tribal governments, in the aggregate, or the private sector in any 1 year. Although initially the changes in the December 31, 2002 final rule are expected to result in a small increase in the burden imposed upon reviewing authorities in order for them to be included in the State's SIP, as well as other small increases in burden discussed under ''Paperwork Reduction Act'' in the preamble to the December 31, 2002 final rule, those revisions will ultimately provide greater operational flexibility to sources permitted by the States, which will in turn reduce the overall burden of the program on State and local authorities by reducing the number of required permit modifications. In addition, we believe the 2002 rule changes will actually reduce the regulatory burden associated with the major NSR program by improving the operational flexibility of owners and operators, improving the clarity of requirements, and providing alternatives that sources may take advantage of to further improve their operational flexibility. Because we are proposing no changes to the final rule, we believe that the same is true for today's notice. It is highly unlikely that today's action would increase regulatory burden to the extent of requiring expenditures of $100 million or more by State, local, and tribal governments, in the aggregate, or the private sector in any 1 year. Thus, today's action is not subject to the requirements of sections 202 and 205 of the UMRA.

For the same reasons stated above, we have determined that today's notice contains no regulatory requirements that might significantly or uniquely affect small governments. Thus, today's action is not subject to the requirements of section 203 of the UMRA.

E. Executive Order 13132—Federalism

Executive Order 13132, entitled ''Federalism'' (64 FR 43255, August 10, 1999), requires EPA to develop an accountable process to ensure ''meaningful and timely input by State and local officials in the development of regulatory policies that have federalism implications.'' ''Policies that have federalism implications'' is defined in the Executive Order to include regulations that have ''substantial direct effects on the States, on the relationship between the national government and the States, or on the distribution of power and responsibilities among the various levels of government.''

Today's action does not have federalism implications. It will not have substantial direct effects on the States, on the relationship between the national government and the States, or on the distribution of power and responsibilities among the various levels of government, as specified in Executive Order 13132. While the final rule published on December 31, 2002 will result in some expenditures by the States, we expect those expenditures to be limited to $331,250 per year. This figure includes the small increase in the burden imposed upon reviewing authorities in order for them to revise the State's SIP. However, the revisions contained in the December 31, 2002 final rule provide greater operational flexibility to sources permitted by the States, which will in turn reduce the overall burden of the program on State and local authorities by reducing the number of required permit modifications. Because we are proposing no changes to the final rules, we do not expect that today's notice would increase regulatory burden to the extent that it would result in substantial direct effects on the States. Thus, Executive Order 13132 does not apply to today's notice.

In the spirit of Executive Order 13132, and consistent with EPA policy to promote communications between EPA and State and local governments, EPA specifically solicits comment on today's action from State and local officials.

F. Executive Order 13175—Consultation and Coordination With Indian Tribal Governments

Executive Order 13175, entitled ''Consultation and Coordination with Indian Tribal Governments'' (65 FR 67249, November 9, 2000), requires EPA to develop an accountable process to ensure ''meaningful and timely input by tribal officials in the development of regulatory policies that have tribal implications.'' Today's action does not have tribal implications as specified in Executive Order 13175. Thus, Executive Order 13175 does not apply to this action.

The purpose of the December 31, 2002 final rule is to add greater flexibility to the existing major NSR regulations. Those changes will benefit permitting authorities and the regulated community, including any major source owned by a tribal government or located in or near tribal land, by providing increased certainty as to when the requirements of the NSR program apply. Taken as a whole, the December 31, 2002 final rule should result in no added burden or compliance costs and should not substantially change the level of environmental performance achieved under the previous rules.

EPA anticipates that initially the changes in the December 31, 2002 final rule will result in a small increase in the burden imposed upon Reviewing Authorities in order for them to be included in the State's SIP. Nevertheless, those revisions will ultimately provide greater operational flexibility to sources permitted by the States, which will in turn reduce the overall burden of the program on State and local authorities by reducing the number of required permit modifications. In comparison, no tribal government currently has an approved tribal implementation plan (TIP) under the Clean Air Act to implement the NSR program. The Federal government is currently the NSR permitting authority in Indian country. Thus, tribal governments should not experience added burden from the December 31, 2002 final rule, nor should their laws be affected with respect to implementation of that rule. Additionally, although major stationary sources affected by the December 31, 2002 final rule could be located in or near Indian country and/or be owned or operated by tribal governments, such sources would not incur additional costs or compliance burdens as a result of that rule. Instead, the only effect on such sources should be the benefit of the added certainty and flexibility provided by that rule. For the reasons stated above, we do not believe that any changes resulting from today's notice would increase burden for tribal governments. In addition, we do not anticipate that any such changes would have substantial direct effects on sources located in or near Indian country or sources owned or operated by tribal governments.

EPA specifically solicits additional comment on today's notice from tribal officials.

G. Executive Order 13045—Protection of Children From Environmental Health Risks and Safety Risks

Executive Order 13045, entitled ''Protection of Children from Environmental Health Risks and Safety Risks'' (62 FR 19885, April 23, 1997), applies to any rule that: (1) Is determined to be ''economically significant'' as defined under Executive Order 12866; and (2) concerns an environmental health or safety risk that EPA has reason to believe may have a disproportionate effect on children. If the regulatory action meets both criteria, the Agency must evaluate the environmental health or safety effects of

the planned rule on children, and explain why the planned regulation is preferable to other potentially effective and reasonably feasible alternatives considered by the Agency.

Today's action is not subject to the Executive Order because it is not economically significant as defined in Executive Order 12866, and because the Agency does not have reason to believe the environmental health or safety risks addressed by this action present a disproportionate risk to children. We believe that the December 31, 2002 final rule as a whole will result in equal or better environmental protection than provided by earlier regulations, and do so in a more streamlined and effective manner. Similarly, today's notice is not expected to change substantially the level of environmental protection provided by the December 31, 2002 final rule, and as a result, it is not expected to present a disproportionate environmental health or safety risk for children.

H. Executive Order 13211—Actions Concerning Regulations That Significantly Affect Energy Supply, Distribution, or Use

Today's notice is not a ''significant energy action'' as defined in Executive Order 13211, ''Actions Concerning Regulations That Significantly Affect Energy Supply, Distribution, or Use'' (66 FR 28355, May 22, 2001) because it is not likely to have a significant adverse effect on the supply, distribution, or use of energy. The December 31, 2002 final rule improves the ability of sources to undertake pollution prevention or energy efficiency projects, switch to less polluting fuels or raw materials, maintain the reliability of production facilities, and effectively utilize and improve existing capacity. That rule also includes a number of provisions to streamline administrative and permitting processes so that facilities can quickly accommodate changes in supply and demand. It provides several alternatives that are specifically designed to reduce administrative burden for sources that use pollution prevention or energy efficient projects. We do not expect that today's action would result in changes to the final rules that are so substantial as to have a significant adverse effect on the supply, distribution, or use of energy.

I. National Technology Transfer and Advancement Act

Section 12(d) of the National Technology Transfer and Advancement Act of 1995 (NTTAA), Public Law No. 104–113, 12(d) (15 U.S.C. 272 note) directs EPA to use voluntary consensus standards in its regulatory activities unless to do so would be inconsistent with applicable law or otherwise impractical.

Voluntary consensus standards are technical standards (for example, materials specifications, test methods, sampling procedures, and business practices) that are developed or adopted by voluntary consensus standards bodies. The NTTAA directs EPA to provide Congress, through OMB, explanations when the Agency decides not to use available and applicable voluntary consensus standards.

Today's notice does not involve technical standards. Therefore, EPA is not considering the use of any voluntary consensus standards.

VI. Statutory Authority

The statutory authority for this action is provided by sections 307(d)(7)(B), 101, 111, 114, 116, and 301 of the CAA as amended (42 U.S.C. 7401, 7411, 7414, 7416, and 7601). This notice is also subject to section 307(d) of the CAA (42 U.S.C. 7407(d)).

List of Subjects in 40 CFR Parts 51 and 52

Environmental protection, Administrative practice and procedure, Air pollution control, BACT, Baseline emissions, Carbon monoxide, Clean Units, Hydrocarbons, Intergovernmental relations, LAER, Lead, Major modifications, Nitrogen oxides, Ozone, Particulate matter, Plantwide applicability limitations, Pollution control projects, Reporting and recordkeeping requirements, Sulfur oxides.

Dated: July 25, 2003.

Jeffrey Holmstead,

Assistant Administrator, Office of Air and Radiation.

[FR Doc. 03–19356 Filed 7–29–03; 8:45 am]

BILLING CODE 6560–50–P

ENVIRONMENTAL PROTECTION AGENCY

40 CFR Part 52

[TX–164–1–7602a; FRL–7536–8]

Approval and Promulgation of Implementation Plans; Texas; Control of Emission of Oxides of Nitrogen From Cement Kilns

AGENCY: Environmental Protection Agency (EPA).

ACTION: Direct final rule.

SUMMARY: The EPA is taking direct final action on revisions to the Texas State Implementation Plan (SIP). These revisions concern Control of Air Pollution from Nitrogen Compounds, Cement Kilns. The EPA is approving these SIP revisions for cement kilns as they will contribute to attainment of the 1-hour ozone National Ambient Air quality Standards (NAAQS). The EPA is approving emissions of Oxides of Nitrogen (NO_X) for cement kilns in accordance with the requirements of the Federal Clean Air Act (the Act).

DATES: This rule is effective on September 29, 2003 without further notice, unless EPA receives adverse comment by August 29, 2003. If EPA receives such comment, EPA will publish a timely withdrawal in the **Federal Register** informing the public that this rule will not take effect.

ADDRESSES: Written comments on this action should be addressed to Mr. Thomas H. Diggs, Chief, Air Planning Section (6PD–L), at the EPA Region 6 Office listed below. Electronic comments should be sent either to Diggs.Thomas@epa.gov or to *http://www.regulations.gov,* which is an alternative method for submitting electronic comments to EPA. To submit comments, please follow the detailed instructions described in Final Action part of this document. Copies of the Technical Support Document (TSD) and other documents relevant to this action are available for public inspection during normal business hours at the following locations. Anyone wanting to examine these documents should make an appointment with the appropriate office at least two working days in advance.

Environmental Protection Agency, Region 6, Air Planning Section (6PD-L), 1445 Ross Avenue, Dallas, Texas 75202–2733.

Texas Commission on Environmental Quality (TCEQ), Office of Air Quality, 12124 Park 35 Circle, Austin, Texas 78753.

FOR FURTHER INFORMATION CONTACT: Mr. Alan Shar, Air Planning Section (6PD–L), EPA Region 6, 1445 Ross Avenue, Dallas, Texas 75202–2733, telephone (214) 665–6691, and *shar.alan@epa.gov.*

SUPPLEMENTARY INFORMATION:

Table of Contents

1. What Actions Are We Taking in This Document?
2. Why Are We Approving These SIP Revisions for Texas?
3. What Is NO_X?
4. What Is a SIP?
5. What Are the Existing NO_X Emissions Specifications in the Texas SIP?
6. What Do These Rule Revisions for Cement Kilns That We Are Approving Provide?
7. What Areas In Texas Will These Rules Affect?

8. General Information

Throughout this document ''we,'' ''us,'' and ''our'' means EPA.

1. What Actions Are We Taking in This Document?

On April 30, 2000, the Governor of Texas submitted to us rule revisions to 30 TAC, Chapter 117, Control of Air Pollution From Nitrogen Compounds concerning cement kilns operations (April 30, 2000 SIP submittal). The April 30, 2000 SIP submittal specifically addressed revisions to the following sections of Chapter 117.

TABLE I.—AFFECTED SECTIONS OF THE RULE UNDER APRIL 30, 2000 SIP SUBMITTAL

Section	Title
117.260	Cement Kiln Definitions.
117.261	Applicability.
117.265	Emissions Specifications.
117.273	Continuous Demonstration of Compliance.
117.279	Notification, Recordkeeping, and Reporting Requirements.
117.283	Source Cap.
117.524	Compliance Schedule for Cement Kilns.

In CEMEX USA (CEMEX) and TXI Operations, LP (TXI) v. TCEQ, Case No. GN001480 (Travis Co. Dist. Ct. April 30, 2003), CEMEX and TXI challenged the State for adopting the above revision to Chapter 117. As a part of a negotiated settlement of the case, TCEQ issued a re-proposal to revise 30 TAC, Chapter 117, on October 24, 2002. The incorporation of the re-proposal into the SIP may result in better compliance by the regulated community and thus more certainty that the emission reductions will actually occur.

On December 9, 2002, EPA submitted comments to TCEQ concerning re-proposed revisions to Chapter 117.

On April 2, 2003, TCEQ submitted a revised Chapter 117, Control of Air Pollution from Nitrogen Compounds rule concerning cement kilns operations as a revision to the SIP (April 2, 2003 SIP submittal). The April 2, 2003 SIP submittal specifically addressed revisions to the following sections of Chapter 117.

TABLE II.—AFFECTED SECTIONS OF THE RULE UNDER APRIL 2, 2003 SIP SUBMITTAL

Section	Title
117.260	Cement Kiln Definitions.
117.265	Emissions Specifications.
117.279	Notification, Recordkeeping, and Reporting Requirements.
117.283	Source Cap.
117.524	Compliance Schedule for Cement Kilns.
117.570	Use of Credits for Compliance.

See our TSD for additional details/information and our evaluation of these submittals.

2. Why Are We Approving These SIP Revisions for Texas?

The April 30, 2000 and April 2, 2003 SIP submittals require the affected sources to reduce their NO_X emissions from cement kilns by at least thirty percent from the 1996 baseline emissions levels. The April 30, 2000 and April 2, 2003 SIP submittals also offer operational flexibility to the affected sources to comply with the NO_X emissions limitations. We are approving these revisions to the Texas SIP because they will contribute to attainment of the 1-hour ozone NAAQS, and as a measure to strengthen the SIP. We are approving these revisions to the Texas SIP as meeting the requirements of the Act.

3. What Is NO_X?

Nitrogen oxides belong to the group of criteria air pollutants. NO_X results from burning fuels, including gasoline and coal. Nitrogen oxides react with volatile organic compounds (VOC) to form ozone or smog and are also major components of acid rain.

4. What Is a SIP?

Section 110 of the Act requires States to develop air pollution regulations and control strategies to ensure that State air quality meets the NAAQS that EPA has established. Under section 109 of the Act, EPA established the NAAQS to protect public health. The NAAQS address six criteria pollutants. These criteria pollutants are: carbon monoxide, nitrogen dioxide, ozone, lead, particulate matter, and sulfur dioxide.

Each State must submit these regulations and control strategies to us for approval and incorporation into the federally enforceable SIP. Each federally approved SIP protects air quality primarily by addressing air pollution at its point of origin. These SIPs can be extensive, containing State regulations or other enforceable documents and supporting information such as emission inventories, monitoring networks, and modeling demonstrations.

5. What Are the Existing NO_X Emissions Specifications in the Texas SIP?

Currently, Texas SIP contains no federally-approved requirements for controlling NO_X emissions from cement kilns. By approving the April 30, 2000 and April 2, 2003 SIP submittals we will be strengthening the Texas SIP compliance for enforcement purposes.

6. What Do These Rule Revisions for Cement Kilns That We Are Approving Provide?

These rule revisions require at least 30% reductions of NO_X compared with the 1996 baseline emission inventory from cement kilns operating in Bexar, Comal, Ellis, Hays, and McLennan Counties (East and Central Texas). The following two tables contain a summary of these SIP revisions for cement kilns in East and Central Texas.

TABLE III.—AFFECTED SOURCES, LOCATIONS, AND NO_X EMISSIONS SPECIFICATIONS FOR CEMENT KILNS

Source	County	NO_X emission specification
Long wet kiln	Bexar, Comal, Hays, McLennan	6.0 lb NO_X/ton of clinker produced.
Long wet kiln	Ellis	4.0 lb NO_X/ton of clinker produced.
Long dry kiln	Bexar, Comal, Hays, McLennan, Ellis	5.1 lb NO_X/ton clinker of produced.
Preheater kiln	Bexar, Comal, Hays, McLennan, Ellis	3.8 lb NO_X/ton of clinker produced.
Precalciner or preheater-precalciner kiln	Bexar, Comal, Hays, McLennan, Ellis	2.8 lb NO_X/ton of clinker produced.

TABLE IV.—AFFECTED SOURCES AND THEIR COMPLIANCE SCHEDULES

Source	Compliance schedule
Cement kilns in Ellis County ..	May 1, 2003.
Cement kilns in Bexar, Comal, Hays, and McLennan.	May 1, 2005.

These emissions specifications meet and are in agreement with those found in our reference document EPA–453/R–94–004 for cement plants and are comparable or more stringent than emission specifications for cement kilns in a number of other federally approved State rules. See our TSD for additional information. We are of the opinion that the above listed compliance dates are practicable. We are approving the NO_X emission specifications and compliance dates for cement kilns as a part of the Texas 1-hour ozone SIP under part D of the Act because the State is relying on these NO_X control measures to demonstrate attainment of the 1-hour ozone standard in the Dallas/Fort Worth area. We are also approving these rules under sections 110 and 116 of the Act because they contribute to continued maintenance of the standard in the eastern half of the State of Texas strengthen the existing Texas SIP.

7. What Areas in Texas Will These Rules Affect?

The following table contains a list of Counties affected by today's rulemaking action.

TABLE V.—AFFECTED TEXAS COUNTIES BY THE CEMENT KILN PROVISIONS OF CHAPTER 117

Rule/source	Affected counties
Chapter 117/Cement Kilns.	Bexar, Comal, Ellis, Hays, and McLennan.

If you are in one of these Texas counties, you should refer to the Chapter 117 rules to determine if and how today's action will affect you.

Final Action

The EPA is publishing this rule without prior proposal because we view this as a noncontroversial amendment and anticipate no adverse comments. However, in the ''Proposed Rules'' section of today's **Federal Register** publication, we are publishing a separate document that will serve as the proposal to approve the SIP revision if adverse comments are received. This rule will be effective on September 29, 2003 without further notice unless we receive adverse comment by August 29, 2003. If EPA receives adverse comments, we will publish a timely withdrawal in the **Federal Register** informing the public that the rule will not take effect. We will address all public comments in a subsequent final rule based on the proposed rule. We will not institute a second comment period on this action. Any parties interested in commenting must do so at this time.

8. General Information

How Can I Get Copies of This Document and Other Related Information?

A. *The Regional Office has established an official public rulemaking file available for inspection at the Regional Office.* The EPA has established an official public rulemaking file for this action under TX–164–1–7602. The official public file consists of the documents specifically referenced in this action, any public comments received, and other information related to this action. Although a part of the official docket, the public rulemaking file does not include Confidential Business Information (CBI) or other information whose disclosure is restricted by statute. The official public rulemaking file is the collection of materials that is available for public viewing at the Air Planning Section, EPA Region 6, 1445 Ross Avenue, Dallas, Texas 75202. The EPA requests that, if at all possible, you contact the rulemaking contact listed as the Further Information Contact to schedule your inspection. The Regional Office's official hours of business are Monday through Friday, 8:30 to 4:30 excluding Federal Holidays.

B. *Copies of the State submittal and EPA's Technical Support Document (TSD) are also available for public inspection during normal business hours, by appointment at the State Air Agency.* TCEQ, Office of Air Quality, 12124 Park 35 Circle, Austin, Texas 78753.

C. *Electronic Access.* You may access this Federal Register document electronically through the Regulations.gov web site located at *http://www.regulations.gov* where you can find, review, and submit comments on Federal rules that have been published in the **Federal Register**, the Government's legal newspaper, and are open for comment.

For public commenters, it is important to note that EPA's policy is that public comments, whether submitted electronically or in paper, will be made available for public viewing at the EPA Regional Office, as EPA receives them and without change, unless the comment contains copyrighted material, CBI, or other information whose disclosure is restricted by statute. When EPA identifies a comment containing copyrighted material, EPA will provide a reference to that material in the version of the comment that is placed in the official public rulemaking file. The entire printed comment, including the copyrighted material, will be available at the Regional Office for public inspection.

How and To Whom Do I Submit Comments?

You may submit comments electronically, by mail, or through hand delivery/courier. To ensure proper receipt by EPA, identify the appropriate rulemaking identification number, TX–164–1–7602, in the subject line on the first page of your comment. Please ensure that your comments are submitted within the specified comment period. Comments received after the close of the comment period will be marked ''late.'' The EPA is not required to consider these late comments.

A. *Electronically.* If you submit an electronic comment as prescribed below, EPA recommends that you include your name, mailing address, and an e-mail address or other contact information in the body of your comment. Also include this contact information on the outside of any disk or CD ROM you submit, and in any cover letter accompanying the disk or CD ROM. This ensures that you can be identified as the submitter of the comment and allows EPA to contact you in case EPA cannot read your comment due to technical difficulties or needs further information on the substance of your comment. The EPA's policy is that EPA will not edit your comment, and any identifying or contact information provided in the body of a comment will be included as part of the comment that is placed in the official public docket, and made available in EPA's electronic public docket. If EPA cannot read your comment due to technical difficulties and cannot contact you for clarification, EPA may not be able to consider your comment.

i. *Electronic Mail (e-mail).* Comments may be sent by e-mail to Mr. Alan Shar (*shar.alan@epa.gov*). The EPA's e-mail system is not an ''anonymous access'' system. If you send an e-mail comment directly without going through Regulations.gov, EPA's e-mail system automatically captures your e-mail address. E-mail addresses that are automatically captured by EPA's e-mail system are included as part of the

comment that is placed in the official public docket, and made available in EPA's electronic public docket.

ii. *Regulations.gov*. Your use of Regulations.gov is an alternative method of submitting electronic comments to EPA. Go directly to Regulations.gov at *http://www.regulations.gov*, then select EPA at the top of the page and use the go button. The list of current EPA actions available for comment will be listed. Please follow the online instructions for submitting comments. The system is an ''anonymous access'' system, which means EPA will not know your identity, e-mail address, or other contact information unless you provide it in the body of your comment.

iii. *Disk or CD ROM*. You may submit comments on a disk or CD ROM that you mail to the mailing address identified in Section B, directly below. These electronic submissions will be accepted in WordPerfect, Word, or ASCII file format. Avoid the use of special characters and any form of encryption.

B. *By Mail*. Send your comments to: Mr. Thomas Diggs, Chief, Air Planning Section (6PD–L), 1445 Ross Avenue, Dallas, Texas 75202–2733; Attention: TX–164–1–7602.

C. *By Hand Delivery or Courier*. Deliver your comments to: Mr. Thomas Diggs, Chief, Air Planning Section (6PD-L), 1445 Ross Avenue, Dallas, Texas 75202–2733. Such deliveries are only accepted during the Regional Office's normal hours of operation. The Regional Office's official hours of business are Monday through Friday, 8:30 to 4:30 excluding Federal Holidays.

How Should I Submit CBI to the Agency?

Do not submit information that you consider to be CBI electronically to EPA. You may claim information that you submit to EPA as CBI by marking any part or all of that information as CBI (if you submit CBI on disk or CD ROM, mark the outside of the disk or CD ROM as CBI and then identify electronically within the disk or CD ROM the specific information that is CBI). Information so marked will not be disclosed except in accordance with procedures set forth in 40 CFR part 2.

In addition to one complete version of the comment that includes any information claimed as CBI, a copy of the comment that does not contain the information claimed as CBI must be submitted for inclusion in the official public regional rulemaking file. If you submit the copy that does not contain CBI on disk or CD ROM, mark the outside of the disk or CD ROM clearly that it does not contain CBI. Information not marked as CBI will be included in the public file and available for public inspection without prior notice. If you have any questions about CBI or the procedures for claiming CBI, please consult the person identified in the **FOR FURTHER INFORMATION CONTACT** section.

Statutory and Executive Order Reviews

Under Executive Order 12866 (58 FR 51735, October 4, 1993), this action is not a ''significant regulatory action'' and therefore is not subject to review by the Office of Management and Budget. For this reason, this action is also not subject to Executive Order 13211, ''Actions Concerning Regulations That Significantly Affect Energy Supply, Distribution, or Use'' (66 FR 28355, May 22, 2001). This action merely approves state law as meeting Federal requirements and imposes no additional requirements beyond those imposed by state law. Accordingly, the Administrator certifies that this rule will not have a significant economic impact on a substantial number of small entities under the Regulatory Flexibility Act (5 U.S.C. 601 *et seq.*). Because this rule approves pre-existing requirements under state law and does not impose any additional enforceable duty beyond that required by state law, it does not contain any unfunded mandate or significantly or uniquely affect small governments, as described in the Unfunded Mandates Reform Act of 1995 (Pub. L. 104–4).

This rule also does not have tribal implications because it will not have a substantial direct effect on one or more Indian tribes, on the relationship between the Federal Government and Indian tribes, or on the distribution of power and responsibilities between the Federal Government and Indian tribes, as specified by Executive Order 13175 (65 FR 67249, November 9, 2000). This action also does not have Federalism implications because it does not have substantial direct effects on the States, on the relationship between the national government and the States, or on the distribution of power and responsibilities among the various levels of government, as specified in Executive Order 13132 (64 FR 43255, August 10, 1999). This action merely approves a state rule implementing a Federal standard, and does not alter the relationship or the distribution of power and responsibilities established in the Clean Air Act. This rule also is not subject to Executive Order 13045 ''Protection of Children from Environmental Health Risks and Safety Risks'' (62 FR 19885, April 23, 1997), because it is not economically significant.

In reviewing SIP submissions, EPA's role is to approve state choices, provided that they meet the criteria of the Clean Air Act. In this context, in the absence of a prior existing requirement for the State to use voluntary consensus standards (VCS), EPA has no authority to disapprove a SIP submission for failure to use VCS. It would thus be inconsistent with applicable law for EPA, when it reviews a SIP submission, to use VCS in place of a SIP submission that otherwise satisfies the provisions of the Clean Air Act. Thus, the requirements of section 12(d) of the National Technology Transfer and Advancement Act of 1995 (15 U.S.C. 272 note) do not apply. This rule does not impose an information collection burden under the provisions of the Paperwork Reduction Act of 1995 (44 U.S.C. 3501 *et seq.*).

The Congressional Review Act, 5 U.S.C. 801 *et seq.*, as added by the Small Business Regulatory Enforcement Fairness Act of 1996, generally provides that before a rule may take effect, the agency promulgating the rule must submit a rule report, which includes a copy of the rule, to each House of the Congress and to the Comptroller General of the United States. EPA will submit a report containing this rule and other required information to the U.S. Senate, the U.S. House of Representatives, and the Comptroller General of the United States prior to publication of the rule in the **Federal Register**. A major rule cannot take effect until 60 days after it is published in the **Federal Register**. This action is not a ''major rule'' as defined by 5 U.S.C. 804(2).

Under section 307(b)(1) of the Clean Air Act, petitions for judicial review of this action must be filed in the United States Court of Appeals for the appropriate circuit by September 29, 2003. Filing a petition for reconsideration by the Administrator of this final rule does not affect the finality of this rule for the purposes of judicial review nor does it extend the time within which a petition for judicial review may be filed, and shall not postpone the effectiveness of such rule or action. This action may not be challenged later in proceedings to enforce its requirements. (See section 307(b)(2).)

List of Subjects in 40 CFR Part 52

Environmental protection, Air pollution control, Intergovernmental relations, Reporting and recordkeeping requirements, Volatile organic compounds.

Dated: July 17, 2003.

Lawrence Starfield,

Acting Regional Administrator, Region 6.

Part 52, chapter I, title 40 of the Code of Federal Regulations is amended as follows:

PART 52—[AMENDED]

■ 1. The authority citation for part 52 continues to read as follows:

Authority: 42 U.S.C. 7401 *et seq.*

Subpart SS—Texas

2. In § 52.2270 the table in paragraph (c) is amended under Chapter 117, Subchapter B, by adding a new entry heading as ''Division 4—Cement Kilns'', adding new individual entries for sections ''117.260, 117.261, 117.265, 117.273, 117.279, and 117.283''; Subchapter E, by adding a new individual entry for section 117.524 and revising the entry for section 117.570.

§ 52.2270 Identification of plan.

* * * * *

(c) * * *

EPA APPROVED REGULATIONS IN THE TEXAS SIP

State citation	Title/subject	State approval/submittal date	EPA approval date	Explanation
* *	*	*	*	*
Chapter 117 (Reg 7)—Control of Air Pollution From Nitrogen Compounds				
* *	*	*	*	*
Section 117.223	Source Cap	04/19/00	03/16/01,66 FR 15200	(b)(1) Requires EPA's approval.
Subchapter B—Division 4—Cement Kilns				
Section 117.260	Cement Kiln Definitions	04/30/00, 04/02/03	*July 30, 2003 and [FR page number].*	
Section 117.261	Applicability	04/30/00	*July 30, 2003 and [FR page number].*	Also finalizes 65 FR 64914.
Section 117.265	Emission Specifications	04/30/00, 04/02/03	*July 30, 2003 and [FR page number].*	
Section 117.273	Continuous Demonstration of Compliance.	04/30/00	*July 30, 2003 and [FR page number].*	Also finalizes 65 FR 64914
Section 117.279	Notification, Recordkeeping, and Reporting Requirements.	04/30/00, 04/02/03	*July 30, 2003 and [FR page number].*	
Section 117.283	Source Cap	04/30/00, 04/02/03	*July 30, 2003 and [FR page number].*	
* *	*	*	*	*
Subchapter E—Administrative Provisions				
* *	*	*	*	*
Section 117.524	Compliance Schedule for Cement Kilns.	04/30/00, 04/02/03	*July 30, 2003 and [FR page number].*	
* *	*	*	*	*
Section 117.570	Use of Emissions Credits for Compliance.	04/02/03	*July 30, 2003 and [FR page number].*	
* *	*	*	*	*

[FR Doc. 03–19279 Filed 7–29–03; 8:45 am]

BILLING CODE 6560–50–P

ENVIRONMENTAL PROTECTION AGENCY

40 CFR Part 180

[OPP–2003–0059; FRL–7309–8]

Bacillus subtilis var. amyloliquefaciens strain FZB24; Exemption from the Requirement of a Tolerance

AGENCY: Environmental Protection Agency (EPA).

ACTION: Final rule.

SUMMARY: This regulation establishes an exemption from the requirement of a tolerance for residues of the *Bacillus subtilis* var. *amyloliquefaciens* strain FZB24 on all agricultural commodities when applied/used in accordance with good agricultural use practices for plant strengthening, growth enhancement, and plant disease suppression. Earth BioSciences submitted a petition to EPA under the Federal Food, Drug, and Cosmetic Act (FFDCA), as amended by the Food Quality Protection Act of 1996 (FQPA), requesting an exemption from

the requirement of a tolerance. This regulation eliminates the need to establish a maximum permissible level for residues of *Bacillus subtilis* var. *amyloliquefaciens* strain FZB24.

DATES: This regulation is effective July 30, 2003. Objections and requests for hearings, identified by docket ID number OPP–2003–0059, must be received on or before September 29, 2003.

ADDRESSES: Written objections and hearing requests may be submitted by mail or through hand delivery/courier. Follow the detailed instructions as provided in Unit IX. of the **SUPPLEMENTARY INFORMATION.**

FOR FURTHER INFORMATION CONTACT: Robyn Rose, Biopesticides and Pollution Prevention Division (7511C), Environmental Protection Agency, 1200 Pennsylvania Ave., NW., Washington, DC 20460–0001; telephone number: (703) 308–9581; e-mail address: *rose.robyn@epa.gov*.

SUPPLEMENTARY INFORMATION:

I. General Information

A. Does this Action Apply to Me?

You may be potentially affected by this action if you are an agricultural producer, food manufacturer, or pesticide manufacturer. Potentially affected entities may include, but are not limited to:

- Crop production (NAICS 111)
- Animal production (NAICS 112)
- Food manufacturing (NAICS 311)
- Pesticide manufacturing (NAICS 32532)
- Antimicrobial pesticides (NAICS 32561)

This listing is not intended to be exhaustive, but rather provides a guide for readers regarding entities likely to be affected by this action. Other types of entities not listed in this unit could also be affected. The North American Industrial Classification System (NAICS) codes have been provided to assist you and others in determining whether this action might apply to certain entities. If you have any questions regarding the applicability of this action to a particular entity, consult the person listed under **FOR FURTHER INFORMATION CONTACT.**

B. How Can I Get Copies of this Document and Other Related Information?

1. *Docket*. EPA has established an official public docket for this action under docket identification (ID) number OPP–2003–0059. The official public docket is intended to serve as a repository for materials (i.e., documents and other information) submitted to the Agency in connection with this action and/or relied upon by the Agency in taking this action. Although a part of the official docket, the public docket does not include Confidential Business Information (CBI) or other information whose disclosure is restricted by statute. The official public docket is available for public viewing at the Public Information and Records Integrity Branch (PIRIB), Rm. 119, Crystal Mall #2, 1921 Jefferson Davis Hwy., Arlington, VA. This docket facility is open from 8:30 a.m. to 4 p.m., Monday through Friday, excluding legal holidays. The docket telephone number is (703) 305–5805. To the extent that a particular document is not located in the official public docket, consult the person listed under **FOR FURTHER INFORMATION CONTACT.**

2. *Electronic access*. You may access this **Federal Register** document electronically through the EPA Internet under the ''**Federal Register**'' listings at *http://www.epa.gov/fedrgstr/*. A frequently updated electronic version of 40 CFR part 180 is available at *http://www.access.gpo.gov/nara/cfr/cfrhtml_00/Title_40/40cfr180_00.html*, a beta site currently under development.

An electronic version of the public docket is available through EPA's electronic public docket and comment system, EPA Dockets. You may use EPA Dockets at *http://www.epa.gov/edocket/* to submit or view public comments, access the index listing of the contents of the official public docket, and to access those documents in the public docket that are available electronically. Once in the system, select ''search,'' then key in the appropriate docket ID number.

II. Background and Statutory Findings

In the **Federal Register** of October 22, 2002 (67 FR 32231) (FRL–7275–7), EPA issued a notice pursuant to section 408 of the FFDCA, 21 U.S.C. 346a(d), as amended by FQPA (Public Law 104–170), announcing the filing of a pesticide tolerance petition (PP 2F06453) by Earth BioSciences, 451 Orange St, New Haven, CT 06511. This notice included a summary of the petition prepared by the petitioner Earth BioSciences. There were no comments received in response to the Notice of Filing.

The petition requested that 40 CFR part 180 be amended by establishing an exemption from the requirement of a tolerance for residues of *Bacillus subtilis* var. *amyloliquefaciens* strain FZB24.

Section 408(c)(2)(A)(i) of the FFDCA allows EPA to establish an exemption from the requirement for a tolerance (the legal limit for a pesticide chemical residue in or on a food) only if EPA determines that the exemption is ''safe.'' Section 408(c)(2)(A)(ii) of the FFDCA defines ''safe'' to mean that ''there is a reasonable certainty that no harm will result from aggregate exposure to the pesticide chemical residue, including all anticipated dietary exposures and all other exposures for which there is reliable information.'' This includes exposure through drinking water and in residential settings, but does not include occupational exposure. Section 408(b)(2)(C) of the FFDCA requires EPA to give special consideration to exposure of infants and children to the pesticide chemical residue in establishing a tolerance and to ''ensure that there is a reasonable certainty that no harm will result to infants and children from aggregate exposure to the pesticide chemical residue. . . .'' Additionally, section 408(b)(2)(D) of the FFDCA requires that the Agency consider ''available information'' concerning the cumulative effects of a particular pesticide's residues and ''other substances that have a common mechanism of toxicity.''

EPA performs a number of analyses to determine the risks from aggregate exposure to pesticide residues. First, EPA determines the toxicity of pesticides. Second, EPA examines exposure to the pesticide through food, drinking water, and through other exposures that occur as a result of pesticide use in residential settings.

III. Toxicological Profile

Consistent with section 408(b)(2)(D) of the FFDCA, EPA has reviewed the available scientific data and other relevant information in support of this action and considered its validity, completeness, and reliability and the relationship of this information to human risk. EPA has also considered available information concerning the variability of the sensitivities of major identifiable subgroups of consumers, including infants and children.

Earth BioSciences, formerly Taensa, Inc., conducted the toxicology studies required under section 408(d)(2)(A) of the FFDCA to support its petition for an exemption from the requirement of tolerance for *Bacillus subtilis* var. *amyloliquefaciens* strain FZB24. As illustrated below, the studies conducted indicate a low mammalian toxicity for *Bacillus subtilis* var. *amyloliquefaciens* strain FZB24. In addition, no pathogenicity or infectivity was observed in any of the tests conducted with *Bacillus subtilis* var. *amyloliquefaciens* strain FZB24. All toxicology data generated by Earth

BioSciences have been reviewed by the Biopesticides and Pollution Prevention Division (''BPPD'').

Toxicology data in support of the exemption from the requirement of a tolerance for *Bacillus subtilis* var. *amyloliquefaciens* strain FZB24 included studies with spores (technical) and with the formulated product (water dispersible powder) as follows:

1. *Acute toxicity and/or pathogenicity*—i. *Bacillus subtilis* var. *amyloliquefaciens* strain FZB24 Spores (Technical):

• *Acute oral toxicity/pathogenicity in rats.* ''. . . does not appear to be toxic and/or pathogenic in rats when dosed at 1.3 x 10^8 cfu.'' BPPD Review of Product Chemistry and Toxicity/Pathogenicity Data Submitted by Taensa, Inc., for the Registration of TAE–022 and TAE–022 WDG, which contains *Bacillus subtilis* var. *amyloliquefaciens* strain FZB24 (Submission No.: S559221; DP Barcode: 254584; Master Record Identification (MRID) No's.: 447581–01 through 447581–20) (hereinafter referred to as ''BPPD Review - December 20, 1999'').

• *Acute dermal toxicity/pathogenicity in rabbits.* ''The severity of irritation persisted 72 hours, and slight irritation persisted for 10 days, and all resolved by day 11. No deaths observed. The acute lethal dose (LD_{50}) is greater than 2,000 mg/kg . . . Dermal Toxicity = Toxicity III.'' (BPPD Review - December 20, 1999).

• *Acute inhalation toxicity in rats.* ''The inhalation LC_{50} for males, females, and combined was > 0.93 mg/L. Toxicity Category III.'' (Submission No.: S616797; DP Barcode: 283473; MRID No's.: 456725–01 and 456725–02) (hereinafter referred to as ''BPPD Review - April 25, 2002'')

• *Acute pulmonary toxicity/pathogenicity in rats.* ''. . . does not appear to be toxic and/or pathogenic in rats, when dosed at 1.3 x 10^8 cfu/animal. No total clearance is seen form the lungs of treated test animals . . . showed a distinct pattern of clearance from kidney, liver, and spleen.'' (BPPD Review - December 20, 1999).

• *Acute intravenous toxicity/pathogenicity in rats.* ''. . . does not appear to be toxic and/or pathogenic in rats, when dosed at 1.7 x 10^8 cfu/animal.'' (BPPD Review - December 20, 1999).

• *Primary eye irritation.* ''. . . showed no signs of persistent irritation into day 21, when dosed at 4.7 x 10^{10} cfu/right eye/animal.'' (BPPD Review - December 20, 1999.) The December 20, 1999 BPPD review indicated Toxicity Category I, but was amended in a March 7, 2000 review to Toxicity Category II based on a comparison of test animals showing similar recovery trends and leading to reversibility within 21 days. Addendum to Toxicity Category for TAE–022, which contains *Bacillus subtilis* var. *amyloliquefaciens* Strain FZB24 (Submission No.: S559221; DP Barcode: 254584; MRID No.: 447581–14).

• *Primary dermal irritation.* ''. . . severity of irritations persisted >72 hours, but resolved by day 11. Dermal irritation = Toxicity II.'' (BPPD Review - December 20, 1999).

• *Hypersensitivity testing.* ''Based on the submitted data . . . does not appear to be a sensitizer when dosed at 3.6 x 10^{10} cfu.'' (BPPD Review - December 20, 1999).

• *Hypersensitivity incident reporting.* ''No recorded or reported hypersensitivity reaction . . . based on handling MCPA in lab control setting, equating to 55 person years. . .'' (BPPD Review - December 20, 1999).

• *Immune response.* ''There is no information to suggest that *Bacillus subtilis* var. *amyloliquefaciens* strain FZB24 has an effect on the immune system. The submitted toxicity/pathogenicity studies in rodents indicated that following several routes of exposure, the immune system is still intact and able to process and clear the active ingredient.'' (BPPD Review - December 20, 1999).

• *Potential health effects.* ''Based on information given, there are no apparent negative effects . . . Cited literature on *B. subtilis* indicate and/or support the development as a biological control. . .'' (BPPD Review - December 20, 1999).

• *Growth parameters.* ''. . . is shown to grow at all tested temperatures (e.g., 30, 34, 37, and 50 °C). The enumeration shows a low 4.2 x 10^{11} cfu/g at 37 °C to a high 6.0 x 10^{11} cfu/g at 34 °C.'' (BPPD Review - December 20, 1999).

ii. *Bacillus subtilis* var. *amyloliquefaciens* strain FZB24 WDG (Formulation):

• *Acute oral LD_{50} toxicity in rats.* ''Toxic/limit dose . . . is greater than 2.8 g/kg body weight (6.7 x 10^{10} cfu/kg). . . Toxicity Category III.'' (BPPD Review - December 20, 1999).

• *Acute dermal LD_{50} toxicity in rats.* ''The severity of irritation persisted >72 hours, but resolved by day 11. No deaths observed. The acute dose (LD_{50}) is greater than 2,000 mg/kg. . . . Dermal irritation = Toxicity Category II; Dermal Toxicity = Toxicity Category III.'' (BPPD Review - December 20, 1999).

• *Acute inhalation lethal concentration (LC_{50}) toxicity in rats (Formulation).* ''. . . an acute inhalation medium (LC_{50}) in male and female rats is greater than 0.93 mg/L . . . Toxicity Category III.'' (BPPD Review - April 25, 2002)

• *Primary eye irritation.* ''No corneal opacity, and no signs of irritation by day 7, when dosed . . . at 3.6 x 10^{10} cfu/right eye/animal. . . . Toxicity Category III.'' (BPPD Review - December 20, 1999).

• *Hypersensitivity.* ''Not a sensitizer when dosed at 3.6 x 10^{10} cfu. No hypersensitivity incidents have been reported.'' (BPPD Review - December 20, 1999).

Based on the data generated in accordance with the Tier I data requirements set forth in 40 CFR 158.740(c), the Tier II and Tier III data requirements were not triggered and, therefore, not required in connection with this action.

IV. Aggregate Exposures

In examining aggregate exposure, section 408 of the FFDCA directs EPA to consider available information concerning exposures from the pesticide residue in food and all other non-occupational exposures, including drinking water from ground water or surface water and exposure through pesticide use in gardens, lawns, or buildings (residential and other indoor uses).

A. Dietary Exposure

Bacillus subtilis var. *amyloliquefaciens* strain FZB24 is a naturally-occurring microorganism and widespread in the environment. The low toxicity and non-pathogenicity/infectivity of *Bacillus subtilis* var. *amyloliquefaciens* strain FZB24 is demonstrated by the data summarized in this action. The end-use (formulated) product will be applied to all agricultural commodities as a seed treatment and via incorporation, drenching, spraying, dipping, chemigation and hydroponics.

1. *Food.* While the proposed use pattern may result in dietary exposure with possible residues on all agricultural commodities, negligible risk is expected for the general population, as well as for infants and children. Submitted acute toxicology tests (MRID Numbers 447581–08, 447581–09, 447581–10, 447581–11, 447581–12, 447581–13, 447581–14, 447581–16, and 456725–02) demonstrate that based upon the use sites, use patterns, application method, use rates, low exposure, and minimal risk of toxicity, the potential risks from dietary exposure for both the general population and infants and children are considered low.

2. *Drinking water exposure.* Although *Bacillus subtilis* var. *amyloliquefaciens* strain FZB24 spores may be found naturally in water, it is not known as an aquatic bacterium, and therefore is not expected to proliferate in aquatic

habitats. (Earth BioSciences petition from the requirement of a tolerance for *Bacillus subtilis* var.*amyloliquefaciens* strain FZB24, dated May 3, 2002.) In addition, the potential for transfer of *Bacillus subtilis* var. *amyloliquefaciens* strain FZB24 to surface or ground water during run-off associated with intended use applications is considered minimal to non-existent, due in part to its percolation through and resulting capture in soil. Most importantly, though, the risk from consumption of drinking water containing *Bacillus subtilis* var. *amyloliquefaciens* strain FZB24 is considered minimal as there is no evidence of adverse effects from oral, dermal, or inhalation exposure to this microbial agent. (See Unit III.) Accordingly, it is not considered to be a risk to drinking water.

B. Other Non-Occupational Exposure

Based on the proposed use patterns, the potential of non-dietary exposures to *Bacillus subtilis* var. *amyloliquefaciens* strain FZB24 pesticide residues for the general population, including infants and children, is unlikely. Accordingly, the Agency believes that the potential aggregate non-occupational exposure, derived from dermal and inhalation exposure through the application of *Bacillus subtilis* var. *amyloliquefaciens* strain FZB24, should fall well below the currently tested microbial safety levels. (MRID Numbers 447581–10, 447581–11, 447581–12, and 456725–02).

1. *Dermal exposure*. Dermal exposure via the skin is a potential route of exposure resulting from applications of *Bacillus subtilis* var. *amyloliquefaciens* strain FZB24. Unbroken skin is a natural barrier to microbial invasion of the human body. Dermal absorption could occur only if the skin were cut, if the microbe were a pathogen equipped with mechanisms for entry through or infection of the skin, or if metabolites were produced that could be dermally absorbed. Acute dermal toxicity/pathogenicity data resulted in irritation that persisted 72 hours, and slight irritation persisted for 10 days, and all resolved by day 11. No deaths were observed. The acute lethal dose (LD_{50}) is greater than 2,000 mg/kg. (BPPD Review - December 20, 1999). Accordingly, the risks anticipated for this route of exposure are considered minimal.

2. *Inhalation exposure*. Inhalation would be an additional potential route of exposure resulting from applications of *Bacillus subtilis* var. *amyloliquefaciens* strain FZB24. However, because the pulmonary study showed no adverse effects (MRID Numbers 447581–12 and 456725–02) the risks anticipated for this route of exposure are considered minimal.

V. Cumulative Effects

The Agency has considered available information on the cumulative effects of such residues and other substances that have a common mechanism of toxicity. These considerations included the cumulative effects on infants and children of such residues and other substances with a common mechanism of toxicity. Because there is no indication of mammalian toxicity to *Bacillus subtilis* var. *amyloliquefaciens* strain FZB24, the Agency is confident that there will not be cumulative effects from the residues of this product on all agricultural commodities. (See Unit III.)

VI. Determination of Safety for U.S. Population, Infants and Children

1. *U.S. population*. *Bacillus subtilis* var. *amyloliquefaciens* strain FZB24 is a naturally occurring microorganism and *Bacillus subtilis* var. *amyloliquefaciens* is widespread in the environment. Based on the very low levels of mammalian toxicity associated with *Bacillus subtilis* var. *amyloliquefaciens* strain FZB24, which is demonstrated by the data summarized above, and the history of safe use of *B. subtilis*, the Agency has concluded that there is a reasonable certainty that no harm will result from aggregate exposure to residues of *Bacillus subtilis* var. *amyloliquefaciens* strain FZB24 to the U.S. population. This includes all anticipated dietary exposures and all other exposures for which there is reliable information. Accordingly, exempting *Bacillus subtilis* var. *amyloliquefaciens* strain FZB24 from the requirement of a tolerance should be considered safe and pose no significant risk.

2. *Infants and children*. FFDCA section 408(b)(2)(C) provides that EPA shall apply an additional tenfold margin of exposure (safety) for infants and children in the case of threshold effects to account for prenatal and postnatal toxicity and the completeness of the data base on toxicity and exposure unless EPA determines that a different margin of exposure (safety) will be safe for infants and children. Margins of exposure (safety) are incorporated into EPA risk assessments either directly through the use of a margin of exposure analysis or by using uncertainty (safety) factors in calculating a dose level that poses no appreciable risk to humans. Here, EPA concludes that the toxicity and exposure data are sufficiently complete to adequately address the potential for additional sensitivity of infants and children to residues of *Bacillus subtilis* var. *amyloliquefaciens* strain FZB24 and that there is a reasonable certainty that no harm will result to infants and children from aggregate exposure to *Bacillus subtilis* var. *amyloliquefaciens* strain FZB24 residues. Also, for food use of microbial pesticides, the acute toxicity/pathogenicity studies have allowed for the conclusion that an exemption from the requirement of a tolerance for *Bacillus subtilis* var. *amyloliquefaciens* strain FZB24 is appropriate and adequate to protect human health, including that of infants and children.

VII. Other Considerations

A. Endocrine Disruptors

EPA is required under section 408(p) of the FFDCA, as amended by FQPA, to develop a screening program to determine whether certain substances (including all pesticide active and other ingredients) ''may have an effect in humans that is similar to an effect produced by a naturally occurring estrogen, or other such endocrine effects as the Administrator may designate.'' Following the recommendations of its Endocrine Disruptor Screening and Testing Advisory Committee (EDSTAC), EPA determined that there is no scientific basis for including, as part of the screening program, the androgen and thyroid hormone systems in addition to the estrogen hormone system. EPA also adopted EDSTAC's recommendation that the program include evaluations of potential effects in wildlife. For pesticide chemicals, EPA will use Federal Insecticide, Fungicide, and Rodenticide Act (FIFRA) and, to the extent that effects in wildlife may help determine whether a substance may have an effect in humans, FFDCA authority to require wildlife evaluations. As the science develops and resources allow, screening of additional hormone systems may be added to the Endocrine Disruptor Screening Program (EDSP). When the appropriate screening and/or testing protocols being considered under the Agency's EDSP have been developed, *Bacillus subtilis* var. *amyloliquefaciens* strain FZB24 may be subjected to additional screening and/or testing to better characterize effects related to endocrine disruption.

Based on available data, no endocrine system-related effects have been identified with consumption of *Bacillus subtilis* var. *amyloliquefaciens* strain FZB24. It is a naturally occurring bacteria that is widespread in the environment. To date, there is no evidence to suggest that *Bacillus subtilis* var. *amyloliquefaciens* strain FZB24

affects the immune system, functions in a manner similar to any known hormone, or that it acts as an endocrine disruptor.

B. Analytical Method

The Agency proposes to establish an exemption from the requirement of a tolerance without any numerical limitation for the reasons stated above, including *Bacillus subtilis* var. *amyloliquefaciens* strain FZB24's lack of mammalian toxicity. For the same reasons, the Agency has concluded that an analytical method is not required for enforcement purpose for *Bacillus subtilis* var. *amyloliquefaciens* strain FZB24.

C. Codex Maximum Residue Level

There are no Codex maximum residue levels established for residues of *Bacillus subtilis* var. *amyloliquefaciens* strain FZB24.

VIII. Objections and Hearing Requests

Under section 408(g) of the FFDCA, as amended by the FQPA, any person may file an objection to any aspect of this regulation and may also request a hearing on those objections. The EPA procedural regulations which govern the submission of objections and requests for hearings appear in 40 CFR part 178. Although the procedures in those regulations require some modification to reflect the amendments made to the FFDCA by the FQPA, EPA will continue to use those procedures, with appropriate adjustments, until the necessary modifications can be made. The new section 408(g) of the FFDCA provides essentially the same process for persons to ''object'' to a regulation for an exemption from the requirement of a tolerance issued by EPA under new section 408(d) of the FFDCA, as was provided in the old sections 408 and 409 of the FFDCA. However, the period for filing objections is now 60 days, rather than 30 days.

A. What Do I Need to Do to File an Objection or Request a Hearing?

You must file your written objections and hearing requests with the Hearing Clerk in accordance with the instructions provided in this unit and in 40 CFR part 178. To ensure proper receipt by EPA, you must identify docket ID number OPP–2003–0059 in the subject line on the first page of your submission. All objections and hearing requests must be in writing, and must be mailed or delivered to the Hearing Clerk on or before September 29, 2003.

1. *Filing the request*. Your objections must specify the specific provisions in the regulation that you object to, and the grounds for the objections (40 CFR 178.25). If a hearing is requested, the objections must include a statement of the factual issues(s) on which a hearing is requested, the requestor's contentions on such issues, and a summary of any evidence relied upon by the objector (40 CFR 178.27). Information submitted in connection with an objection or hearing request may be claimed confidential by marking any part or all of that information as CBI. Information so marked will not be disclosed except in accordance with procedures set forth in 40 CFR part 2. A copy of the information that does not contain CBI must be submitted for inclusion in the public record. Information not marked confidential may be disclosed publicly by EPA without prior notice.

Mail your written request to: Office of the Hearing Clerk (1900C), Environmental Protection Agency, 1200 Pennsylvania Ave., NW., Washington, DC 20460–0001. You may also deliver your request to the Office of the Hearing Clerk in Rm.104, Crystal Mall #2, 1921 Jefferson Davis Hwy., Arlington, VA. The Office of the Hearing Clerk is open from 8 a.m. to 4 p.m., Monday through Friday, excluding legal holidays. The telephone number for the Office of the Hearing Clerk is (703) 603–0061.

2. *Tolerance fee payment*. If you file an objection or request a hearing, you must also pay the fee prescribed by 40 CFR 180.33(i) or request a waiver of that fee pursuant to 40 CFR 180.33(m). You must mail the fee to: EPA Headquarters Accounting Operations Branch, Office of Pesticide Programs, P.O. Box 360277M, Pittsburgh, PA 15251. Please identify the fee submission by labeling it ''Tolerance Petition Fees.''

EPA is authorized to waive any fee requirement ''when in the judgement of the Administrator such a waiver or refund is equitable and not contrary to the purpose of this subsection.'' For additional information regarding the waiver of these fees, you may contact James Tompkins by phone at (703) 305–5697, by e-mail at *tompkins.jim@epa.gov*, or by mailing a request for information to Mr. Tompkins at Registration Division (7505C), Office of Pesticide Programs, Environmental Protection Agency, 1200 Pennsylvania Ave., NW., Washington, DC 20460–0001.

If you would like to request a waiver of the tolerance objection fees, you must mail your request for such a waiver to: James Hollins, Information Resources and Services Division (7502C), Office of Pesticide Programs, Environmental Protection Agency, 1200 Pennsylvania Ave., NW., Washington, DC 20460–0001.

3. *Copies for the Docket*. In addition to filing an objection or hearing request with the Hearing Clerk as described in Unit IX.A., you should also send a copy of your request to the PIRIB for its inclusion in the official record that is described in Unit I.B.1. Mail your copies, identified by docket ID number OPP–2003–0059, to: Public Information and Records Integrity Branch, Information Resources and Services Division (7502C), Office of Pesticide Programs, Environmental Protection Agency, 1200 Pennsylvania Ave., NW., Washington, DC 20460–0001. In person or by courier, bring a copy to the location of the PIRIB described in Unit I.B.1. You may also send an electronic copy of your request via e-mail to: *opp-docket@epa.gov*. Please use an ASCII file format and avoid the use of special characters and any form of encryption. Copies of electronic objections and hearing requests will also be accepted on disks in WordPerfect 6.1/8.0 or ASCII file format. Do not include any CBI in your electronic copy. You may also submit an electronic copy of your request at many Federal Depository Libraries.

B. When Will the Agency Grant a Request for a Hearing?

A request for a hearing will be granted if the Administrator determines that the material submitted shows the following: There is a genuine and substantial issue of fact; there is a reasonable possibility that available evidence identified by the requestor would, if established resolve one or more of such issues in favor of the requestor, taking into account uncontested claims or facts to the contrary; and resolution of the factual issues(s) in the manner sought by the requestor would be adequate to justify the action requested (40 CFR 178.32).

IX. Statutory and Executive Order Reviews

This final rule establishes an exemption from the tolerance requirement for *Bacillus subtilis* var. *amyloliquefaciens* strain FZB24 under section 408(d) of the FFDCA in response to a petition submitted to the Agency. The Office of Management and Budget (OMB) has exempted these types of actions from review under Executive Order 12866, entitled *Regulatory Planning and Review* (58 FR 51735, October 4, 1993). Because this rule has been exempted from review under Executive Order 12866 due to its lack of significance, this rule is not subject to Executive Order 13211, *Actions Concerning Regulations That Significantly Affect Energy Supply, Distribution, or Use* (66 FR 28355, May

22, 2001). This final rule does not contain any information collections subject to OMB approval under the Paperwork Reduction Act (PRA), 44 U.S.C. 3501 *et seq.*, or impose any enforceable duty or contain any unfunded mandate as described under Title II of the Unfunded Mandates Reform Act of 1995 (UMRA) (Public Law 104–4). Nor does it require any special considerations under Executive Order 12898, entitled *Federal Actions to Address Environmental Justice in Minority Populations and Low-Income Populations* (59 FR 7629, February 16, 1994); or OMB review or any Agency action under Executive Order 13045, entitled *Protection of Children from Environmental Health Risks and Safety Risks* (62 FR 19885, April 23, 1997). This action does not involve any technical standards that would require Agency consideration of voluntary consensus standards pursuant to section 12(d) of the National Technology Transfer and Advancement Act of 1995 (NTTAA), Public Law 104–113, section 12(d) (15 U.S.C. 272 note). Since tolerances and exemptions that are established on the basis of a petition under section 408(d) of the FFDCA, such as the exemption from the tolerance requirement in this final rule, do not require the issuance of a proposed rule, the requirements of the Regulatory Flexibility Act (RFA) (5 U.S.C. 601 *et seq.*) do not apply. In addition, the Agency has determined that this action will not have a substantial direct effect on States, on the relationship between the national government and the States, or on the distribution of power and responsibilities among the various levels of government, as specified in Executive Order 13132, entitled *Federalism* (64 FR 43255, August 10, 1999). Executive Order 13132 requires EPA to develop an accountable process to ensure ''meaningful and timely input by State and local officials in the development of regulatory policies that have federalism implications.'' ''Policies that have federalism implications'' is defined in the Executive Order to include regulations that have ''substantial direct effects on the States, on the relationship between the national government and the States, or on the distribution of power and responsibilities among the various levels of government.'' This final rule directly regulates growers, food processors, food handlers and food retailers, not States. This action does not alter the relationships or distribution of power and responsibilities established by Congress in the preemption provisions of section 408(n)(4) of the FFDCA. For these same reasons, the Agency has determined that this rule does not have any ''tribal implications'' as described in Executive Order 13175, entitled *Consultation and Coordination with Indian Tribal Governments* (65 FR 67249, November 6, 2000). Executive Order 13175, requires EPA to develop an accountable process to ensure ''meaningful and timely input by tribal officials in the development of regulatory policies that have tribal implications.'' ''Policies that have tribal implications'' is defined in the Executive Order to include regulations that have ''substantial direct effects on one or more Indian tribes, on the relationship between the Federal Government and the Indian tribes, or on the distribution of power and responsibilities between the Federal Government and Indian tribes.'' This rule will not have substantial direct effects on tribal governments, on the relationship between the Federal Government and Indian tribes, or on the distribution of power and responsibilities between the Federal government and Indian tribes, as specified in Executive Order 13175. Thus, Executive Order 13175 does not apply to this rule.

X. Congressional Review Act

The Congressional Review Act, 5 U.S.C. 801 *et seq.*, as added by the Small Business Regulatory Enforcement Fairness Act of 1996, generally provides that before a rule may take effect, the agency promulgating the rule must submit a rule report, which includes a copy of the rule, to each House of the Congress and to the Comptroller General of the United States. EPA will submit a report containing this rule and other required information to the U.S. Senate, the U.S. House of Representatives, and the Comptroller General of the United States prior to publication of this final rule in the **Federal Register**. This final rule is not a ''major rule'' as defined by 5 U.S.C. 804(2).

List of Subjects in 40 CFR Part 180

Environmental protection, Administrative practice and procedure, Agricultural commodities, Pesticides and pests, Reporting and recordkeeping requirements.

Dated: June 20, 2003.

James Jones,

Director, Office of Pesticide Programs.

■ Therefore, 40 CFR chapter I is amended as follows:

PART 180—[AMENDED]

■ 1. The authority citation for part 180 continues to read as follows:

Authority: 21 U.S.C. 321(q), 346(a) and 371.

■ 2. Section 180.1243 is added to subpart D to read as follows:

§ 180.1243 Bacillus subtilis var. amyloliquefaciens strain FZB24; exemption from the requirement of a tolerance.

An exemption from the requirement of a tolerance for residues of the *Bacillus subtilis* var. *amyloliquefaciens* strain FZB24 in or on all agricultural commodities when applied/used in accordance with label directions.

[FR Doc. 03–19134 Filed 7–29–03; 8:45 am]

BILLING CODE 6560–50–S

ENVIRONMENTAL PROTECTION AGENCY

40 CFR Part 180

[OPP–2003–0246; FRL–7319–6]

Boscalid; 3-pyridinecarboxamide, 2-chloro-N-(4'-chloro[1,1'-biphenyl]-2-yl); Pesticide Tolerance

AGENCY: Environmental Protection Agency (EPA).

ACTION: Final rule.

SUMMARY: This regulation establishes a tolerance for residues of boscalid, 3-pyridinecarboxamide, 2-chloro-N-(4'-chloro[1,1'-biphenyl]-2-yl) in or on certain commodities and establishes a tolerance for the combined residues of boscalid, 3-pyridinecarboxamide, 2-chloro-N-(4'-chloro[1,1'-biphenyl]-2-yl) and its metabolites 2-chloro-N-(4'-chloro-5-hydroxy-biphenyl-2-yl)nicotinamide and the glucuronic acid conjugate of 2-chloro-N-(4'-chloro-5-hydroxy-biphenyl-2-yl)nicotinamide in or on certain commodities. BASF Corporation requested tolerances under the Federal Food, Drug, and Cosmetic Act (FFDCA), as amended by the Food Quality Protection Act of 1996 (FQPA).

DATES: This regulation is effective July 30, 2003. Objections and requests for hearings, identified by docket ID number OPP–2003–0246, must be received on or before September 29, 2003.

ADDRESSES: Written objections and hearing requests may be submitted electronically, by mail, or through hand delivery/courier. Follow the detailed instructions as provided in Unit VII. of the **SUPPLEMENTARY INFORMATION**.

FOR FURTHER INFORMATION CONTACT: Cynthia Giles-Parker, Registration

Division (7505C), Office of Pesticide Programs, Environmental Protection Agency, 1200 Pennsylvania Ave., NW.,Washington, DC 20460–0001; telephone number: 703 305–7740; e-mail address: *giles-parker.cynthia@epa.gov*.

SUPPLEMENTARY INFORMATION:

I. General Information

A. Does this Action Apply to Me?

You may be potentially affected by this action if you are an agricultural producer, food manufacturer, pesticide manufacturer or formulator. Potentially affected entities may include, but are not limited to:

•Crop production (NAICS 111)
•Animal production (NACIS 112)
•Food manufacturer (NAICS 311)
•Pesticide manufacturer (NAICS 32532)]

This listing is not intended to be exhaustive, but rather provides a guide for readers regarding entities likely to be affected by this action. Other types of entities not listed in this unit could also be affected. The North American Industrial Classification System (NAICS) codes have been provided to assist you and others in determining whether this action might apply to certain entities. If you have any questions regarding the applicability of this action to a particular entity, consult the person listed under **FOR FURTHER INFORMATION CONTACT**.

B. How Can I Get Copies of this Document and Other Related Information?

1. *Docket*. EPA has established an official public docket for this action under docket identification (ID) number OPP–2003–0246. The official public docket consists of the documents specifically referenced in this action, any public comments received, and other information related to this action. Although a part of the official docket, the public docket does not include Confidential Business Information (CBI) or other information whose disclosure is restricted by statute. The official public docket is the collection of materials that is available for public viewing at the Public Information and Records Integrity Branch (PIRIB), Rm. 119, Crystal Mall #2, 1921 Jefferson Davis Hwy., Arlington, VA. This docket facility is open from 8:30 a.m. to 4 p.m., Monday through Friday, excluding legal holidays. The docket telephone number is (703) 305–5805.

2. *Electronic access*. You may access this **Federal Register** document electronically through the EPA Internet under the ''**Federal Register**'' listings at *http://www.epa.gov/fedrgstr/*. A frequently updated electronic version of 40 CFR part 180 is available at *http://www.access.gpo.gov/nara/cfr/cfrhtml_00/Title_40/40cfr180_00.html*, a beta site currently under development. To access the OPPTS Harmonized Guidelines referenced in this document, go directly to the guidelines at *http://www.epa.gov/opptsfrs/home/guidelin.htm*.

An electronic version of the public docket is available through EPA's electronic public docket and comment system, EPA Dockets. You may use EPA Dockets at *http://www.epa.gov/edocket/* to submit or view public comments, access the index listing of the contents of the official public docket, and to access those documents in the public docket that are available electronically. Although not all docket materials may be available electronically, you may still access any of the publicly available docket materials through the docket facility identified in Unit I.B.1. Once in the system, select ''search,'' then key in the appropriate docket ID number.

II. Background and Statutory Findings

In the **Federal Register** of February 14, 2003 (68 FR 7542) (FRL–7289– 5), EPA issued a notice pursuant to section 408 of FFDCA, 21 U.S.C. 346a, as amended by FQPA (Public Law 104–170), announcing the filing of a pesticide petition (PP 1F6313) by BASF Corporation, P.O. Box 13528, Research Triangle Park, North Carolina 27708–2000. That notice included a summary of the petition prepared by BASF Corporation, the registrant. The Agency received one public comment and it, along with the Agency's response, can be found in Unit V.

The petition (1F6313) requested that 40 CFR 180.589 be amended by establishing a tolerance for residues of the fungicide boscalid, 3-pyridinecarboxamide, 2-chloro-N-(4'-chloro[1,1'-biphenyl]-2-yl), in or on vegetable, root, subgroup 1B at 1.0 ppm; vegetables, tuberous and corm, subgroup 1C at 0.05 ppm; vegetable, root and tuber, leaves, group 2 at 1.0 ppm; vegetable, bulb, group 3 at 3.0 ppm; vegetable, leafy, group 4, at 11.0 ppm; vegetable, Brassica leafy, subgroup 5A, at 3.0 ppm; vegetable, Brassica leafy, subgroup 5B, at 18.0 ppm; vegetable, legume, group 6, at 2.2 ppm; vegetable, legume foliage, group 7,forage at 1.5 ppm; vegetable,, legume, foliage, group 7, hay at 2.0 ppm vegetable, legume, foliage group 7, vines at 0.05 ppm; vegetable, fruiting, group 8 at 1.0 ppm; vegetable, cucurbit, group 9, at 1.5 ppm; fruit, stone, group 12 at 1.7 ppm; berries, group 13 at 3.5 ppm; nut, tree, group 14 at 0.25 ppm; almond, hulls at 3.0 ppm; pistachio at 0.65 ppm; grain, cereal, group 15 at 0.2 ppm; grain, cereal , forage, fodder, and straw, group 16, forage at 2.0 ppm; grain, cereal , forage, fodder, and straw, group 16, straw at 3.0 ppm; grain, cereal , forage, fodder, and straw, group 16, fodder at 1.5 ppm grass, forage, fodder, and hay, group 17, forage at 2.0 ppm; grass, forage, fodder, and hay, group 17, hay at 8.0 ppm; animal feed, nongrass, group 18, forage at 1.0 ppm; animal feed, nongrass, group 18, hay at 2.0 ppm; animal feed, nongrass, group 18 seed at 0.05 ppm; mint at 30.0 ppm; grape at 3.5 ppm; grape, raisin at 8.5 ppm; strawberry at 1.2 ppm; canola at 3.5 ppm; peanut at 0.05 ppm; peanut, meal at 0.15 ppm; peanut, refined oil at 0.15 ppm; cotton, undelinted seed at 0.05 ppm; cotton, gin byproducts at 0.3 ppm; soybean, seed at 0.1 ppm; soybean, hulls at 0.2 ppm; flax seed at 3.5 ppm and sunflower, seed at 3.5 ppm.

The petition (1F6313) also requested that 40 CFR 180.589 be amended by establishing a tolerance for combined residues of the fungicide 3-pyridinecarboxamide, 2-chloro-N-(4'-chloro[1,1'-biphenyl]-2-yl) and metabolites M510F01 2-chloro-N-(4'-chloro-5-hydroxy-biphenyl-2-yl) nicotinamide and M510F02 glucuronic acid conjugate of M510F01 in or on: Cow milk at 0.10 ppm; cow muscle, at 0.10 ppm; cow, fat at 0.30 ppm; cow, meat byproducts at 0.35 ppm; egg at 0.02 ppm; and poultry muscle, poultry fat, and poultry meat byproducts at 0.05 ppm.

Section 408(b)(2)(A)(i) of the FFDCA allows EPA to establish a tolerance (the legal limit for a pesticide chemical residue in or on a food) only if EPA determines that the tolerance is ''safe.'' Section 408(b)(2)(A)(ii) of the FFDCA defines ''safe'' to mean that''there is a reasonable certainty that no harm will result from aggregate exposure to the pesticide chemical residue, including all anticipated dietary exposures and all other exposures for which there is reliable information.'' This includes exposure through drinking water and in residential settings, but does not include occupational exposure. Section 408(b)(2)(C) of the FFDCA requires EPA to give special consideration to exposure of infants and children to the pesticide chemical residue in establishing a tolerance and to ''ensure that there is a reasonable certainty that no harm will result to infants and children from aggregate exposure to the pesticide chemical residue....''

EPA performs a number of analyses to determine the risks from aggregate exposure to pesticide residues. For

further discussion of the regulatory requirements of section 408 of the FFDCA and a complete description of the risk assessment process, see the final rule on Bifenthrin Pesticide Tolerances (62 FR 62961, November 26, 1997) (FRL–5754–7).

III. Aggregate Risk Assessment and Determination of Safety

Consistent with section 408(b)(2)(D) of the FFDCA, EPA has reviewed the available scientific data and other relevant information in support of this action. EPA has sufficient data to assess the hazards of and to make a determination on aggregate exposure, consistent with section 408(b)(2) of the FFDCA, for a tolerance for residues of boscalid, 3-pyridinecarboxamide, 2-chloro-N-(4'-chloro[1,1'-biphenyl]-2-yl) on: Vegetable, root, subgroup 1A, except sugar beet/garden beet/radish/turnip, at 1.0 ppm; vegetable, tuberous and corm, subgroup 1C, at 0.05 ppm; vegetable, bulb, group 3, at 3.0 ppm; lettuce, head at 6.5 ppm; lettuce, leaf at 11.0 ppm; vegetable, Brassica leafy, head and stem, subgroup 5A, at 3.0 ppm; vegetable, Brassica leafy, leafy greens, subgroup 5B, at 18.0 ppm; vegetable, legume, edible-podded, subgroup 6A, at 1.6 ppm; vegetable, legume, succulent shelled pea and bean, subgroup 6B, except cowpea; at 0.6 ppm; vegetable, legume, dried shell pea and bean (except soybean), subgroup 6C, except cowpea, field pea, and grain lupin at 2.5 ppm; vegetable, fruiting, group 8, at 1.2 ppm; vegetable, cucurbit, group 9, except cucumber, at 1.6 ppm; cucumber at 0.20 ppm; fruit, stone, group 12, at 1.7 ppm; berries, group 13, at 3.5 ppm; nut, tree, group 14, at 0.70 ppm; almond, hulls at 3.0 ppm; pistachio at 0.70 ppm; grape at 3.5 ppm; grape, raisin at 8.5 ppm; strawberry at 1.2 ppm; peanut at 0.05 ppm; peanut, meal at 0.15 ppm; peanut, refined oil at 0.15ppm; canola, seed at 3.5 ppm; canola, refined oil at 5.0 ppm; sunflower, seed at 0.60 ppm; peppermint, tops at 30.0 ppm and spearmint, tops at 30.0 ppm.

The Agency also included in this risk assessment dietary exposure (at the anticipated tolerance level) from another pesticide petition (2F6434) for boscalid use on pome fruit and hops. However, the Agency is not establishing tolerances for these commodities at this time, because the residue chemistry review for these commodities is not complete and in fact is not scheduled until the Office of Pesticide Program FY–2004 Workplan.

In addition, also consistent with section 408(b)(2)(D) of the FFDCA, EPA has reviewed the available scientific data and other relevant information in support of this action. EPA has sufficient data to assess the hazards of and to make a determination on aggregate exposure, consistent with section 408(b)(2) of the FFDCA, for a tolerance for residues of boscalid from indirect or inadvertent residues (from rotational crop use), 3-pyridinecarboxamide, 2-chloro-N-(4'-chloro[1,1'-biphenyl]-2-yl) on: Beet, garden, roots at 1.0 ppm; radish, roots at 1.0 ppm; turnip, roots at 1.0 ppm; beet, sugar, roots at 1.0 ppm; vegetable, root and tuber, leaves, group 2 at 1.0 ppm; vegetable, leafy, group 4, except lettuce at 1.0 ppm; vegetable, legume foliage, group 7, forage at 1.5 ppm; vegetable, legume, foliage, group 7, hay at 2.0 ppm; vegetable, legume, foliage group 7, vines at 0.05 ppm; grain, cereal, group 15, at 0.20 ppm; rice, hulls at 0.50 ppm; grain, cereal , forage, fodder, and straw, group 16, fodder at 1.5 ppm; grain, cereal , forage, fodder, and straw, group 16, forage at 2.0 ppm; grain, cereal , forage, fodder, and straw, group 16, straw at 3.0 ppm; grass, forage, fodder, and hay, group 17, forage at 2.0 ppm; grass, forage, fodder, and hay, group 17, hay at 8.0 ppm; grass, forage, fodder, and hay, group 17, straw at 0.30 ppm; grass, forage, fodder, and hay, group 17, seed screenings at 0.20 ppm; animal feed, nongrass, group 18, forage at 1.0 ppm animal feed, nongrass, group 18, hay at 2.0 ppm; animal feed, nongrass, group 18 seed at 0.05 ppm; cotton, undelinted seed at 0.05 ppm; cotton, gin byproducts at 0.30 ppm; soybean, seed, 0.10 ppm; soybean, hulls at 0.20 ppm; cowpea, seed at 0.1 ppm; lupin, grain, grain, at 0.1 ppm; pea, field, seed at 0.1 ppm and flax seed at 3.5 ppm.

Consistent with section 408(b)(2)(D) of the FFDCA, EPA has reviewed the available scientific data and other relevant information in support of this action. EPA has sufficient data to assess the hazards of and to make a determination on aggregate exposure, consistent with section 408(b)(2) of the FFDCA, for a tolerance for combined residues of the fungicide 3-pyridinecarboxamide, 2-chloro-N-(4'-chloro[1,1'-biphenyl]-2-yl) and metabolites M510F01 2-chloro-N-(4'-chloro-5-hydroxy-biphenyl-2-yl) nicotinamide and M510F02 glucuronic acid conjugate of M510F01 in or on milk at 0.10 ppm, cattle, meat at 0.10 ppm, cattle, fat at 0.30 ppm, cattle, meat byproducts at 0.35 ppm, egg at 0.02 ppm, poultry, meat at 0.05 ppm, poultry, fat at 0.05 ppm, poultry, meat byproducts at 0.10 ppm, goat, meat at 0.10 ppm, goat, fat at 0.30 ppm, goat, meat byproducts at 0.35 ppm, hog, meat at 0.05 ppm, hog, fat at 0.10 ppm, hog, meat byproducts at 0.35 ppm, horse, meat at 0.10 ppm, horse, fat at 0.30 ppm, horse, meat byproducts at 0.35 ppm, sheep, meat at 0.10 ppm, sheep, fat at 0.30 ppm, and sheep, meat byproducts at 0.35 ppm. EPA's assessment of exposures and risks associated with establishing the tolerance follows.

A. Toxicological Profile

EPA has evaluated the available toxicity data and considered its validity, completeness, and reliability as well as the relationship of the results of the studies to human risk. EPA has also considered available information concerning the variability of the sensitivities of major identifiable subgroups of consumers, including infants and children. The nature of the toxic effects caused by boscalid, 3-pyridinecarboxamide, 2-chloro-N-(4'-chloro[1,1'-biphenyl]-2-yl) are discussed in Table 1 of this unit as well as the no-observed-adverse-effect-level (NOAEL) and the lowest-observed-adverse-effect-level (LOAEL) from the toxicity studies reviewed.

TABLE 1.—SUBCHRONIC, CHRONIC, AND OTHER TOXICITY

Guideline No.	Study Type	Results
870.3100	90-Day oral toxicity rodents(rats)	NOAEL = 34/159 milligram/kilogram/day (mg/kg/day) Male/Female. LOAEL = 137/395 mg/kg/day M/F based on [M = increases in absolute and relative thyroid weights and increased incidence of thyroid hyperplasia as well as follicular epithelial hypertrophy; F = increases in absolute and relative thyroid weights.]

TABLE 1.—SUBCHRONIC, CHRONIC, AND OTHER TOXICITY—Continued

Guideline No.	Study Type	Results
870.3100	90-Day oral toxicity rodents (mice)	NOAEL: 197/2,209 mg/kg/day (M/F) LOAEL: 788/2,209 mg/kg/day (M/F): M = increased liver weights and increased incidence of marked fatty change in the liver; F = not attained
870.3150	(90-day oral toxicity in nonrodents (dogs)	NOAEL: 7.6/8.1 mg/kg/day (M/F) LOAEL: 78.1/81.7 mg/kg/day (M/F): M = based on increased alkaline phosphatase activity and hepatic weights; F = increased alkaline phosphatase activity and hepatic weights.
870.3200	21/28-Day dermal toxicity (rats)	NOAEL = 1,000 mg/kg/day highest dose tested (HDT) LOAEL = >1,000 mg/kg/day
870.3700	Prenatal developmental in rodents (rats)	Maternal NOAEL = 1,000 mg/kg/day LOAEL = cannot be established Developmental NOAEL = 1,000 mg/kg/day LOAEL = cannot be established
870.3700	Prenatal developmental in nonrodents (rabbits)	Maternal NOAEL = 300 mg/kg/day LOAEL = 1,000 mg/kg/day based on abortions or early delivery. Developmental NOAEL = 300 mg/kg/day LOAEL = 1,000 mg/kg/day based on abortions or early delivery.
870.3800	Reproduction and fertility effects (rats)	Parental/Systemic NOAEL = 112.6/1180.8 mg/kg/day M/F Parental/Systemic LOAEL = 1165.0/>1180.8 mg/kg/day M/F based on decreased body weight and body weight gain (F_1) as well as hepatocyte degeneration F_0 and F_1) in males only. Offspring systemic NOAEL = 11.2/115.8 mg/kg/day (M/F) Offspring systemic LOAEL = 112.6/1180.8 (M/F) mg/kg/day based on decreased body weight for F_2 pups in males and females of both generations. Reproductive NOAEL = 1165.0/1180.8 mg/kg/day (M/F) Reproductive LOAEL = >1165.0/1180.8 mg/kg/day (M/F)
870.4100	Chronic toxicity rodents (rat)	NOAEL = 21.9/30.0 mg/kg/day (M/F) LOAEL = 110.0/150.3 mg/kg/day (M/F) based on M = thyroid toxicity (weights and microscopic changes); F - thyroid toxicity (weights and microscopic changes. Thyroid follicular cell adenomas: M - 0/20, 0/20, 2/20, 1/20; F = 0/20, 0/20, 1/20, 0/20.
870.4100	Chronic toxicity (dogs)	NOAEL = 21.8/22.1 mg/kg/day (M/F) LOAEL = 57.4/58.3 mg/kg/day (M/F) based on M = elevated ALP activities and elevated hepatic weights; F = no effects
870.4200	Carcinogenicity (rats)	NOAEL = 23.0/29.7 mg/kg/day (M/F) LOAEL = 116.1/155.6 mg/kg/day (M/F) based on M = increased incidence of thyroid follicular cell hyperplasia and hypertrophy; F = decrease in body weight gain and increased incidence of thyroid follicular cell hyperplasia and hypertrophy. Thyroid follicular cell adenomas: M = 0/50, 0/50, 1/50, 4/50; F = 0/50, 1/50, 0/50, 3/50.
870.4200	Carcinogenicity (mice)	NOAEL: 65/443 mg/kg/day (M/F) LOAEL: 331/1804 mg/kg/day (M/F): M = decreases in body weight and body weight gains; F = decreases in body weight and body weight gains. No evidence of carcinogenicity.
870.5100	Gene Mutation bacterial reverse mutation assay	Negative without and with S-9 activation up to limit dose of 5,000 μg/plate.
870.5300	*In vitro* mammalian cell forward gene mutation assay (CHO cells/ HGPRT locus)	Negative without and with S-9 activation up to limit of solubility of 25 μg/plate.
870.5375	*In vitro* mammalian cytogenetics assay in Chinese hamster V79 cells	Negative without and with S-9 activation up to 3500 μg/mL with precipitation showing at concentrations of 100 μg/mL and higher.
870.5395	Cytogenetics - mammalian erythrocyte micronucleus test in the mouse	Negative response up to 2,000 mg/kg.

TABLE 1.—SUBCHRONIC, CHRONIC, AND OTHER TOXICITY—Continued

Guideline No.	Study Type	Results
870.5500	*In vitro* unscheduled DNA synthesis (primary rat hepatocytes)	Negative response up to 50 μg/mL. Cytotoxicity at 100 - 500 μg/mL.
870.6200	Acute neurotoxicity screening battery (rat)	NOAEL = 2,000/1,000 mg/kg/day (M/F) LOAEL = >2,000/2,000 mg/kg/day (M/F) based on F = piloerection
870.6200	Subchronic neurotoxicity screening battery (rat)	NOAEL = 1050.0/1272.5 mg/kg/day (M/F) LOAEL = >1050.0/1272.5 mg/kg/day (M/F)
870.6300	Developmental neurotoxicity (rat)	Maternal NOAEL = 1,442 mg/kg/day LOAEL = >1,442 mg/kg/day Offspring NOAEL = 14 mg/kg/day LOAEL = 147 mg/kg/day based on deceased body weights on PND 4 and decreased body weight gain on PNDs 1-4)
870.7485	Metabolism and pharmaco-kinetics (rat)	BAS 510 was readily absorbed and excreted following single oral 50 mg/kg; at single 500 mg/kg or 15 doses of 500 mg/kg, absorption was saturated . Excretion mainly by feces (80-98%). Biliary excretion 40-50% of fecal activity at 50 mg/kg, 10% at 500 mg/kg. Urine, about 16% at 50 mg/kg, 3-5% at 500 mg/kg. Absorption about 56% at 50 mg/kg and 13-17% at 500 mg/kg. Excretory patterns similar by gender or radiolabel position. Metabolites (hydroxylation and conjugation products) were consistent with Phase I oxidation reactions followed by Phase II conjugation with glucuronic acid or sulfate, or by conjugation of the parent with glutahione with cleavage to sulfate metabolites.
870.7600	Dermal penetration (rat)	Maximum % absorption: 0.01 mg/cm^2 = 10.93 (24 hour exposure, 24 hour sacrifice) 0.10 mg/cm^2 = 3.76 (24 hour exposure, 24 hour sacrifice) 1.00 mg/cm^2 - 1.48 (10 hour exposure, 72 hour sacrifice)]
	Special studies: Hepatic enzyme induction (rat)	1. Hypertrophy of zone III hepatocytes 2. >20% increase in liver weight 3. Increase in CYP450 activity 4. Slight to extensive microscopic SER proliferation 5. Not a peroxisome proliferator 6. Enzymes in CYP450 subfamily not induced 7. No notable microscopic increase in size or number of peroxisomes CONCLUSION: Inducer of total CYP450 activity
	Special Study: Hormone and enzyme induction (rat)	1. Slight (statistically significant) decrease in circulating T_3 and T_4 only in males 2. Increase in circulating TSH levels both sexes 3. Increase in all 3 liver microsomal glucuronyltransferases CONCLUSION: disruption of thyroid homoeostasis by decreasing circulation T3 and T4 and increasing TSH; likely the result of hepatic microsomal glucuronyltransferase induction
	Special Study: Reversibility study (dietary): 4-week administration followed by 4 weeks recovery or 13 weeks recovery (rat)	4 weeks dosing: at 2500 and 15000 ppm: increase in TSH (68% and 87%) ; increase in absolute and relative thyroid weights hypertrophy of thyroid follicular epithelial cells and diffuse follicular hyperplasia, increase in absolute and relative liver weights and centrilobular hypertrophy as well as liver portal fatty changes. 4 weeks dosing + 4 weeks recovery: no increases in TSH; increase in absolute and relative thyroid weights; thyroid hypertrophy and hyperplasia decreased to control values; all liver effects reversed to control. 4 weeks dosing + 13 weeks recovery: no increases in TSH; increase in absolute and relative thyroid weights; thyroid hypertrophy and hyperplasia decreased to control values; all liver effects reversed to control. CONCLUSION: induction of liver microsomal enzyme system resulting in increased glucuronidation of thyroxine, resulting in an increase in TSH secretion as a compensatory response of the physiological negative feedback system; increased TSH resulted in increased thyroid weight.

B. Toxicological Endpoints

The dose at which the NOAEL from the toxicology study identified as appropriate for use in risk assessment is used to estimate the toxicological level of concern (LOC). However, the lowest dose at which adverse effects of concern are identified (the LOAEL) is sometimes used for risk assessment if no NOAEL was achieved in the toxicology study selected. An uncertainty factor (UF) is applied to reflect uncertainties inherent in the extrapolation from laboratory animal data to humans and in the variations in sensitivity among members of the human population as well as other unknowns. An UF of 100 is routinely used, 10X to account for interspecies differences and 10X for intra species differences.

For dietary risk assessment (other than cancer) the Agency uses the UF to calculate an acute or chronic reference dose (acute RfD or chronic RfD) where

the RfD is equal to the NOAEL divided by the appropriate UF (RfD = NOAEL/UF). Where an additional safety factors (SF) is retained due to concerns unique to the FQPA, this additional factor is applied to the RfD by dividing the RfD by such additional factor. The acute or chronic Population Adjusted Dose (aPAD or cPAD) is a modification of the RfD to accommodate this type of FQPA SF.

For non-dietary risk assessments (other than cancer) the UF is used to determine the LOC. For example, when 100 is the appropriate UF (10X to account for interspecies differences and 10X for intraspecies differences) the LOC is 100. To estimate risk, a ratio of the NOAEL to exposures (margin of exposure (MOE) = NOAEL/exposure) is calculated and compared to the LOC.

The linear default risk methodology (Q*) is the primary method currently used by the Agency to quantify carcinogenic risk. The Q* approach assumes that any amount of exposure will lead to some degree of cancer risk. A Q* is calculated and used to estimate risk which represents a probability of occurrence of additional cancer cases (e.g., risk is expressed as 1×10^{-6} or one in a million). Under certain specific circumstances, MOE calculations will be used for the carcinogenic risk assessment. In this non-linear approach, a point of departure is identified below which carcinogenic effects are not expected. The point of departure is typically a NOAEL based on an endpoint related to cancer effects though it may be a different value derived from the dose response curve. To estimate risk, a ratio of the point of departure to exposure (MOE_{cancer} = point of departure/exposures) is calculated. A summary of the toxicological endpoints for boscalid used for human risk assessment is shown in Table 2 of this unit:

TABLE 2.—SUMMARY OF TOXICOLOGICAL DOSE AND ENDPOINTS FOR BOSCALID FOR USE IN HUMAN RISK ASSESSMENT

Exposure Scenario	Dose Used in Risk Assessment, UF	Special FQPA SF and Level of Concern for Risk Assessment	Study and Toxicological Effects
Acute Dietary	No appropriate endpoint identified	Not Applicable	Not Applicable
Chronic Dietary (All populations)	NOAEL= 21.8 UF = 100 Chronic RfD = 0.218 mg/kg/day	FQPA SF = 1 cPAD = chronic RfD/ FQPA SF = 0.218 mg/kg/day	Chronic rat, carcinogenicity rat and 1-year dog studies LOAEL = 57-58 mg/kg/day based on liver and thyroid effects
Incidental Oral (Short and intermediate term residential only)	NOAEL= 21.8 mg/kg/day	Residential LOC for MOE = 100	Chronic rat, carcinogenicity rat and 1-year dog studies LOAEL = 57-58 mg/kg/day based on liver and thyroid effects
Dermal (All Durations)	Oral study NOAEL=21.8 mg/kg/day (dermal absorption rate = 15%)	Residential LOC for MOE = 100	Chronic rat, carcinogenicity rat and 1-year dog studies LOAEL = 57-58 mg/kg/day based on liver and thyroid effects
Inhalation (All Durations)	Oral study NOAEL= 21.8 mg/kg/day (inhalation absorption rate = 100%)	Residential LOC for MOE = 100	Chronic rat, carcinogenicity rat and 1-year dog studies LOAEL = 57-58 mg/kg/day based on liver and thyroid effects
Cancer (oral, dermal, inhalation)	Classification: Suggestive evidence of carcinogenicity, but not sufficient to assess human carcinogenic potential.		

UF = uncertainty factor, FQPA SF = Special FQPA safety factor, NOAEL = no observed adverse effect level, LOAEL = lowest observed adverse effect level, PAD = population adjusted dose (a = acute, c = chronic) RfD = reference dose, MOE = margin of exposure, LOC = level of concern, NA = Not Applicable

* The reference to the FQPA SF refers to any additional SF retained due to concerns unique to the FQPA.

C. Exposure Assessment

1. *Dietary exposure from food and feed uses*. These are the first food uses and tolerances for residues of boscalid, in or on raw agricultural commodities. Risk assessments were conducted by EPA to assess dietary exposures from boscalid in food as follows:

i. *Acute exposure*. Acute dietary risk assessments are performed for a food-use pesticide if a toxicological study has indicated the possibility of an effect of concern occurring as a result of a one day or single exposure. There were no toxic effects attributable to a single dose. An endpoint of concern was not identified to quantitate acute-dietary risk to the general population, including infants and children, or to the subpopulation females 13-50 years old. Therefore, there is no acute reference dose (aRfD) or acute population-adjusted dose (aPAD).

ii. *Chronic exposure*. In conducting this chronic dietary risk assessment the Dietary Exposure Evaluation Model (DEEM™) analysis evaluated the individual food consumption as reported by respondents in the USDA 1994–1996 and 1998 nationwide Continuing Surveys of Food Intake by Individuals (CSFII) and accumulated exposure to the chemical for each commodity. The following assumptions were made for the chronic exposure assessments: Tolerance level residues were assumed for all commodities associated with PP 1F6313 with the exception of a few crops where levels higher than the tolerance were used. The latter were due to the lowering of some tolerances to harmonize with Canadian MRL's subsequent to the dietary risk assessment. Pome fruit and hops were also included from PP 2F6434 using the likely tolerance levels. One hundred percent crop treated was assumed for all commodities. Processing factors were either empirical or the default values in DEEM.

iii. *Cancer*. The Agency determined that boscalid produced suggestive evidence of carcinogenicity, but not sufficient to assess human carcinogenic potential. This cancer classification was based on the following weight of evidence considerations. First, in male Wistar rats, there was a significant trend (but not pairwise comparison) for the combined thyroid adenomas and carcinomas. This trend was driven by the increase in adenomas. Second, in the female rats, there was only a borderline significant trend for thyroid adenomas (there were no carcinomas). Third, the mouse study was negative as were all of the mutagenic tests. Consistent with this weak evidence of carcinogenic effects, the Agency concluded that a dose-response assessment for cancer (either linear low-dose extrapolation or margin of exposure calculation) was not needed.

iv. *Anticipated residue and percent crop treated (PCT) information*. The Agency used tolerance level residues and 100% crop treated for this risk analysis.

2. *Dietary exposure from drinking water*. This is a new chemical and the Agency does not have comprehensive monitoring data. Drinking water concentration estimates are made by reliance on simulation or modeling taking into account data on the physical characteristics of boscalid.

The Agency uses the First Index Reservoir Screening Tool (FIRST) or the Pesticide Root Zone/Exposure Analysis Modeling System (PRZM/EXAMS), to produce estimates of pesticide concentrations in an index reservoir. The SCI-GROW model is used to predict pesticide concentrations in shallow groundwater. For a screening-level assessment for surface water EPA will use FIRST (a tier 1 model) before using PRZM/EXAMS (a tier 2 model). The FIRST model is a subset of the PRZM/EXAMS model that uses a specific high-end runoff scenario for pesticides. While both FIRST and PRZM/EXAMS incorporate an index reservoir environment, the PRZM/EXAMS model includes a percent crop area factor as an adjustment to account for the maximum percent crop coverage within a watershed or drainage basin.

None of these models include consideration of the impact processing (mixing, dilution, or treatment) of raw water for distribution as drinking water would likely have on the removal of pesticides from the source water. The primary use of these models by the Agency at this stage is to provide a coarse screen for sorting out pesticides for which it is highly unlikely that drinking water concentrations would ever exceed human health levels of concern.

Since the models used are considered to be screening tools in the risk assessment process, the Agency does not use estimated environmental concentrations (EECs) from these models to quantify drinking water exposure and risk as a %RfD or %PAD. Instead drinking water levels of comparison (DWLOCs) are calculated and used as a point of comparison against the model estimates of a pesticide's concentration in water. DWLOCs are theoretical upper limits on a pesticide's concentration in drinking water in light of total aggregate exposure to a pesticide in food, and from residential uses. Since DWLOCs address total aggregate exposure to boscalid they are further discussed in the aggregate risk sections in Unit III.E.

Based on the PRZM/EXAMS and SCI-GROW models the estimated environmental concentrations (EECs) of boscalid for chronic exposures are estimated to be 25.6 ug/L for surface water and 0.571 ug/L for ground water. The Agency notes that for surface and groundwater assessments, the application rate for turf was used, which represents the highest seasonal application rate (2.1 lbs. active ingredient/acre/season). The highest single application rate associated with the use of the pesticide on fruiting vegetables, did not result in EEC values higher than those calculated for turf use since the proposed total seasonal application rate for fruiting vegetables is only 1.1 lb. active ingredient/acre/season.

3. *From non-dietary exposure*. The term ''residential exposure'' is used in this document to refer to non-occupational, non-dietary exposure (e.g., for lawn and garden pest control, indoor pest control, termiticides, and flea and tick control on pets).

Boscalid is currently being registered for use on the following residential non-dietary sites: The boscalid label with turf use specifies that this product is intended for golf course use only, and not for use on residential turfgrass or turfgrass being grown for sale or other commercial use such as sod production. Although the label does not indicate that the product is applied by licenced or commercial applicators, homeowners will not be applying the product to golf courses. Therefore, a risk assessment for residential handler exposure is not required. The risk assessment was conducted using the following residential exposure assumptions: The Agency uses the term post-application to describe exposures to individuals that occur as a result of being in an environment that has been previously treated with a pesticide. There are two recreational scenarios associated with boscalid that could lead to exposures for adults and children: (i) Adults and youth golfing and (ii) adults and children picking their own fruit. These exposure durations are anticipated to be short term. Because U-pick is a one-time event (duration <1 day) and the Agency found that the oral studies indicated there were no endpoints appropriate to quantitate acute risk, the U-pick exposure/risk was not evaluated. Therefore, only the golfing scenario was evaluated with respect to non-occupational, non-dietary exposure. The dermal MOEs for adults golfing were 27,000-74,000. Although specific MOEs were not calculated for youths playing golf, the adult MOEs are considered representative since the body surface area to weight ratios for adolescents do not vary significantly from those for adults. The refined assessment is based on reliable data and is unlikely to underestimate exposure/risk.

4. *Cumulative exposure to substances with a common mechanism of toxicity*. Section 408(b)(2)(D)(v) of the FFDCA requires that, when considering whether to establish, modify, or revoke a tolerance, the Agency consider ''available information'' concerning the cumulative effects of a particular pesticide's residues and ''other substances that have a common mechanism of toxicity.''

EPA does not have, at this time, available data to determine whether boscalid has a common mechanism of toxicity with other substances or how to include this pesticide in a cumulative risk assessment. Unlike other pesticides for which EPA has followed a cumulative risk approach based on a common mechanism of toxicity, boscalid does not appear to produce a toxic metabolite produced by other substances. For the purposes of this tolerance action, therefore, EPA has not assumed that boscalid has a common mechanism of toxicity with other substances. For information regarding EPA's efforts to determine which chemicals have a common mechanism of toxicity and to evaluate the cumulative effects of such chemicals, see the final rule for Bifenthrin Pesticide Tolerances (62 FR 62961, November 26, 1997).

D. Safety Factor for Infants and Children

1. *In general*. Section 408 of the FFDCA provides that EPA shall apply an additional tenfold margin of safety for infants and children in the case of threshold effects to account for prenatal

and postnatal toxicity and the completeness of the data base on toxicity and exposure unless EPA determines that a different margin of safety will be safe for infants and children. Margins of safety are incorporated into EPA risk assessments either directly through use of a MOE analysis or through using uncertainty (safety) factors in calculating a dose level that poses no appreciable risk to humans.

2. *Prenatal and postnatal sensitivity*. The Agency concluded that there are no residual uncertainties for pre- and post-natal toxicity as the degree of concern is low for the susceptibility seen in the above studies, and the dose and endpoints selected for the overall risk assessments will address the concerns for the body weight effects seen in the offspring. Although the dose selected for overall risk assessments (21.8 mg/kg/day) is higher than the NOAELs in the 2–generation reproduction study (10.1 mg/kg/day) and the developmental neurotoxicity study (14 mg/kg/day), these differences are considered to be an artifact of the dose selection process in these studies. For example, there is a 10-fold difference between the LOAEL (106.8 mg/kg/day) and the NOAEL (10.1 mg/kg/day) in the two generation reproduction study. A similar pattern was seen with regard to the developmental neurotoxicity study, where there is also a 10-fold difference between the LOAEL (147 mg/kg/day) and the NOAEL (14 mg/kg/day). There is only a 2-3 fold difference between the LOAEL (57 mg/kg/day) and the NOAEL (21.8 mg/kg/day) in the critical study used for risk assessment. Because the gap between the NOAEL and LOAEL in the 2–generation reproduction and developmental neurotoxicity studies was large and the effects at the LOAELs were minimal, the true no-observed-adverse-effect-level was probably considerably higher. Therefore, the selection of the NOAEL of 21.8 mg/kg/day from the 1–year dog study is conservative and appropriate for the overall risk assessments. In addition, the endpoints for risk assessment are based on thyroid effects seen in multiple species (mice, rats and dogs) and after various exposure durations (subchronic and chronic exposures) which were not observed at the LOAELs in either the 2–generation reproduction or the developmental neurotoxicity studies. Based on these data, the Agency concluded that there are no residual uncertainties for pre- and post-natal toxicity.

3. *Conclusion*. There is a complete toxicity data base for boscalid and exposure data are complete or are estimated based on data that reasonably accounts for potential exposures. There is no evidence of susceptibility following *in utero* exposure to rats and there is low concern and no residual uncertainties in the developmental toxicity study in rabbits, in the 2–generation reproduction study or in the developmental neurotoxicity study after establishing toxicity endpoints and traditional uncertainty factors to be used in the risk assessment. Based on these data and conclusions, EPA reduced the FQPA Safety Factor to 1X.

E. Aggregate Risks and Determination of Safety

To estimate total aggregate exposure to a pesticide from food, drinking water, and residential uses, the Agency calculates DWLOCs which are used as a point of comparison against the model estimates of a pesticide's concentration in water (EECs). DWLOC values are not regulatory standards for drinking water. DWLOCs are theoretical upper limits on a pesticide's concentration in drinking water in light of total aggregate exposure to a pesticide in food and residential uses. In calculating a DWLOC, the Agency determines how much of the acceptable exposure (i.e., the PAD) is available for exposure through drinking water e.g., allowable chronic water exposure (mg/kg/day) = cPAD - (average food + residential exposure). This allowable exposure through drinking water is used to calculate a DWLOC.

A DWLOC will vary depending on the toxic endpoint, drinking water consumption, and body weights. Default body weights and consumption values as used by the Office of Water are used to calculate DWLOCs: 2 liter (L)/70 kg (adult male), 2L/60 kg (adult female), and 1L/10 kg (child). Default body weights and drinking water consumption values vary on an individual basis. This variation will be taken into account in more refined screening-level and quantitative drinking water exposure assessments. Different populations will have different DWLOCs. Generally, a DWLOC is calculated for each type of risk assessment used: Acute, short-term, intermediate-term, chronic, and cancer.

When EECs for surface water and groundwater are less than the calculated DWLOCs, OPP concludes with reasonable certainty that exposures to the pesticide in drinking water (when considered along with other sources of exposure for which OPP has reliable data) would not result in unacceptable levels of aggregate human health risk at this time. Because OPP considers the aggregate risk resulting from multiple exposure pathways associated with a pesticide's uses, levels of comparison in drinking water may vary as those uses change. If new uses are added in the future, OPP will reassess the potential impacts of residues of the pesticide in drinking water as a part of the aggregate risk assessment process.

1. *Acute risk*. As there were no toxic effects attributable to a single dose, an endpoint of concern was not identified to quantitate acute-dietary risk to the general population or to the subpopulation females 13-50 years old. Therefore, there is no acute reference dose (aRfD) or acute population-adjusted dose (aPAD) for the general population or females 13-50 years old. No acute risk is expected from exposure to boscalid.

2. *Chronic risk*. The chronic aggregate risk assessment takes into account average exposures estimates from dietary consumption of boscalid (food and drinking water) and residential uses. Since the exposure from turf grass (golf course) activities are considered short term, the chronic aggregate included food and drinking water only. The calculated chronic DWLOCs for chronic exposure to boscalid in drinking water range from 1,400 to 7,000 µg/L (ppb).). The chronic aggregate risk associated with the proposed use of boscalid does not exceed the Agency's level of concern for the general U.S. population or any population subgroups. After calculating DWLOCs and comparing them to the EECs for surface and ground water, EPA does not expect the aggregate exposure to exceed 100% of the cPAD, as shown in Table 3 of this unit:

TABLE 3.—AGGREGATE RISK ASSESSMENT FOR CHRONIC (NON- CANCER) EXPOSURE TO BOSCALID

Population Subgroup	cPAD mg/kg/day	% cPAD (Food)	Surface Water EEC (ppb)	Ground Water EEC (ppb)	Chronic DWLOC (ppb)
U.S. Population	0.218	8	25.6	0.571	7,000

TABLE 3.—AGGREGATE RISK ASSESSMENT FOR CHRONIC (NON- CANCER) EXPOSURE TO BOSCALID—Continued

Population Subgroup	cPAD mg/kg/day	% cPAD (Food)	Surface Water EEC (ppb)	Ground Water EEC (ppb)	Chronic DWLOC (ppb)
All Infants (< 1 year old)	0.218	24	25.6	0.571	1,700
Children 1-2 years old	0.218	35	25.6	0.571	1,400
Females 13-49 years old	0.218	5	25.6	0.571	6,200
Adults 50+ years old	0.218	6	25.6	0.571	7,200

3. *Short-term risk*. Short-term aggregate exposure takes into account residential exposure plus chronic exposure to food and water (considered to be a background exposure level).

Boscalid is proposed for use that could result in short-term residential exposure and the Agency has determined that it is appropriate to aggregate chronic food and water and short-term exposures for boscalid.

Using the exposure assumptions described in this unit for short-term exposures, EPA has concluded that food and residential exposures aggregated result in an aggregate MOE of 1,200 for the general population. The short-term aggregate risk assessment takes into account average exposures estimates from dietary consumption of boscalid (food and drinking water) and residential uses. Postapplication exposures from the proposed use on golf course is considered a short term activity and applies to adults and youth. The Agency concluded that exposure from turf grass is needed to be included in the aggregate assessment. Table 4 summarizes the results. For the general population the MOE from food and residential exposure was 1,200. This MOE is also representative of the risk for youth playing golf for the reasons stated in Unit III.C.3. and the dietary exposure for youth (13-19 years old) being less than the general population. These aggregate MOEs do not exceed the Agency's level of concern for aggregate exposure to food and residential uses. In addition, a short-term DWLOC was calculated and compared to the EECs for chronic exposure of boscalid in ground and surface water. The calculated short term DWLOC is 6,000 ppb. After calculating the DWLOC and comparing it to the EECs for surface and ground water, EPA does not expect short-term aggregate exposure to exceed the Agency's level of concern, as shown in Table 4 of this unit:

TABLE 4.—AGGREGATE RISK ASSESSMENT FOR SHORT-TERM EXPOSURE TO BOSCALID

Population Subgroup	Aggregate MOE (Food + Residential)	Aggregate Level of Concern (LOC)	Surface Water EEC (ppb)	Ground Water EEC (ppb)	Short-Term DWLOC (ppb)
General population	1,200	100	25.60	0.571	6,000

4. *Intermediate-term risk*. Intermediate-term aggregate exposure takes into account residential exposure plus chronic exposure to food and water (considered to be a background exposure level). Boscalid is not registered for use on any sites that would result in intermediate-term residential exposure. Therefore, the aggregate risk is the sum of the risk from food and water, which does not exceed the Agency's level of concern.

5. *Aggregate cancer risk for U.S. population*. The Agency has classified boscalid as, ''suggestive evidence of carcinogenicity, but not sufficient to assess human carcinogenic potential,'' and, therefore, the quantification of human cancer risk is not recommended. See Unit III.C.iii of this document for additional details explaining why a cancer risk assessment was not required.

6. *Determination of safety*. Based on these risk assessments, EPA concludes that there is a reasonable certainty that no harm will result to the general population, and to infants and children from aggregate exposure to boscalid residues.

IV. Other Considerations

A. Analytical Enforcement Methodology

Analytical Enforcement Method for Plants. (Method D0008; MRID 45405028). This method determines residues of boscalid. Residues are extracted using an aqueous organic solvent mixture followed by liquid/liquid partitioning and column clean-up. Quantitation is by gas chromatography/mass spectrometry (GC/MS) using selected ion monitoring. The reported limit of quantitation (LOQ) is 0.05 ppm for residues of boscalid in plant matrices.

Analytical Enforcement Method for Livestock. (Method DFG S19; MRID 45405103). This method determines residues of boscalid and two metabolites 2-chloro-N-(4'-chloro-5-hydroxy-biphenyl-2-yl)nicotinamide (M510F01) and glucuronic acid conjugate of 2-chloro-N-4'-chloro-5-hydroxy-biphenyl-2-yl)nicotinamide (M510F02)] in or on the following food commodities (as 2-chloro-N-(4'-chloro-5-hydroxy-biphenyl-2-yl)nicotinamide). Residues are extracted with methanol. The extract is treated with enzymes to release M510F02 to free M510F01. Residues are isolated by liquid/liquid partition followed by column chromatography. Total M510F01 is acetylated followed by a column clean-up. Parent and acetylated M510F01 are quantitated by GC/ECD (electron capture). The reported LOQ for each analyte is 0.01 ppm in milk and 0.025 ppm in other animal matrices.

Adequate enforcement methodology (GC/MS and GC/ECD) is available to enforce the tolerance expression. The method may be requested from: Chief, Analytical Chemistry Branch, Environmental Science Center, 701 Mapes Rd., Ft. Meade, MD 20755–5350; telephone number: (410) 305–2905; e-mail address: *residuemethods@epa.gov*.

B. International Residue Limits

Boscalid is a new fungicide. There are currently no pending or established Codex maximum residue limits (MRLs) for boscalid, and no established Canadian or Mexican MRLs either. The US EPA and PMRA/Canada jointly reviewed this subject petition (1F6313), and the forthcoming tolerances were harmonized to the extent possible with respect to the residues of concern and tolerance levels.

C. Conditions

Any conditions of registration will be specified in the Notice of Registration for the technical grade boscalid.

V. Comments

The Agency received the following comment. The Agency's response follows.

Comment. There should be zero tolerance for ths chemical on food. We do not need more chemicals added to our food. We already have far too many approved by EPA and FDA. I say if there is anything over zero effect from this toxic, that the toxic should be denied use in the USA.

Response. The one comment received in response to the Notice of Filing contained no scientific data or evidence to rebut the Agency's conclusion that there is a reasonable certainty that no harm will result from aggregate exposure to boscalid, including all anticipated dietary exposure and all other exposures for which there is reliable information. General opposition to pesticides in food is not a sufficient reason to deny a tolerance petition.

VI. Conclusion

Therefore, tolerances are established for residues of boscalid, 3-pyridinecarboxamide, 2-chloro-N-(4'-chloro[1,1'-biphenyl]-2-yl), in or on vegetable, root, subgroup 1A, except sugar beet, garden beet, radish, and turnip at 0.7 ppm; vegetable, tuberous and corm, subgroup 1C at 0.05 ppm; vegetable, bulb, group 3 at 3.0 ppm; lettuce, head at 6.5 ppm; lettuce, leaf at 11.0 ppm; vegetable, Brassica leafy, head and stem, subgroup 5A at 3.0 ppm; vegetable, Brassica leafy, leafy greens, subgroup 5B at 18.0 ppm; vegetable, legume, edible-podded, subgroup 6A, at 1.6 ppm; vegetable, legume, succulent shelled pea and bean, subgroup 6B, except cowpea; at 0.6 ppm; vegetable, legume, dried shell pea and bean (except soybean), subgroup 6C, except cowpea, field pea, and grain lupin at 2.5 ppm; vegetable, fruiting, group 8 at 1.2 ppm; vegetable, cucurbit, group 9, except cucumber at 1.6 ppm; cucumber at 0.20 ppm; fruit, stone, group 12 at 1.7 ppm; berries, group 13 at 3.5 ppm; nut, tree, group 14 at 0.70 ppm; almond, hulls at 3.0 ppm; pistachio at 0.70 ppm; grape at 3.5 ppm; grape, raisin at 8.5 ppm; strawberry at 1.2 ppm; peanut at 0.05 ppm; peanut, meal at 0.15 ppm; peanut, refined oil at 0.15 ppm; canola, seed at 3.5 ppm; canola, refined oil at 5.0 ppm; sunflower, seed at 0.60 ppm; peppermint, tops at 30.0 ppm and spearmint, tops at 30.0 ppm.

Tolerances are established for indirect or inadvertent (crop rotation) residues of boscalid, 3-pyridinecarboxamide, 2-chloro-N-(4'-chloro[1,1'-biphenyl]-2-yl), in or on beet, garden, roots at 1.0 ppm; radish, roots, at 1.0 ppm; turnip, roots at 1.0 ppm; beet, sugar, roots at 1.0 ppm; vegetable, root and tuber, leaves, group 2 at 1.0 ppm; vegetable, leafy, group 4, except lettuce at 1.0 ppm; vegetable, legume, foliage, group 7, forage at 1.5 ppm; vegetable, legume, foliage, group 7, hay at 2.0 ppm; vegetable, legume, foliage, group 7, vines at 0.05 ppm; grain, cereal, group 15 at 0.20 ppm; rice, hulls at 0.50 ppm; grain, cereal , forage, fodder, and straw, group 16, fodder at 1.5 ppm; grain, cereal , forage, fodder, and straw, group 16, forage at 2.0 ppm; grain, cereal , forage, fodder, and straw, group 16, straw at 3.0 ppm; grass, forage, fodder, and hay, group 17, forage at 2.0 ppm; grass, forage, fodder, and hay, group 17, hay at 8.0 ppm; grass, forage, fodder, and hay, group 17, straw at 0.30 ppm; grass, forage, fodder, and hay, group 17, seed screenings at 0.20 ppm; animal feed, nongrass, group 18, forage at 1.0 ppm; animal feed, nongrass, group 18, hay at 2.0 ppm; animal feed, nongrass, group 18, seed at 0.05 ppm; cotton, undelinted seed at 0.05 ppm; cotton, gin byproducts at 0.30 ppm; soybean, seed, 0.10 ppm; soybean, hulls at 0.20 ppm; cowpea, seed at 0.1 ppm; lupin, grain, grain at 0.1 ppm; pea, field, seed at 0.1 ppm and flax seed at 3.5 ppm.

Tolerances are established for the combined residues of the fungicide 3-pyridinecarboxamide, 2-chloro-N-(4'-chloro[1,1'-biphenyl]-2-yl) and metabolites M510F01 2-chloro-N-(4'-chloro-5-hydroxy-biphenyl-2-yl) nicotinamide and M510F02 glucuronic acid conjugate of M510F01 in or on milk at 0.10 ppm; cattle, meat at 0.10 ppm; cattle, fat at 0.30 ppm; cattle, meat byproducts at 0.35 ppm; egg at 0.02 ppm; poultry, meat at 0.05 ppm; poultry, fat at 0.05 ppm; poultry, meat byproducts at 0.10 ppm; goat, meat at 0.10 ppm; goat, fat at 0.30 ppm; goat, meat byproducts at 0.35 ppm; hog, meat at 0.05 ppm; hog, fat at 0.10 ppm; hog, meat byproducts at 0.10 ppm; horse, meat at 0.10 ppm; horse, fat at 0.30 ppm; horse, meat byproducts at 0.35 ppm; sheep, meat at 0.10 ppm; sheep, fat at 0.30 ppm and sheep, meat byproducts at 0.35 ppm.

VII. Objections and Hearing Requests

Under section 408(g) of the FFDCA, as amended by the FQPA, any person may file an objection to any aspect of this regulation and may also request a hearing on those objections. The EPA procedural regulations which govern the submission of objections and requests for hearings appear in 40 CFR part 178. Although the procedures in those regulations require some modification to reflect the amendments made to the FFDCA by the FQPA, EPA will continue to use those procedures, with appropriate adjustments, until the necessary modifications can be made. The new section 408(g) of the FFDCA provides essentially the same process for persons to ''object'' to a regulation for an exemption from the requirement of a tolerance issued by EPA under new section 408(d) of FFDCA, as was provided in the old sections 408 and 409 of the FFDCA. However, the period for filing objections is now 60 days, rather than 30 days.

A. What Do I Need to Do to File an Objection or Request a Hearing?

You must file your objection or request a hearing on this regulation in accordance with the instructions provided in this unit and in 40 CFR part 178. To ensure proper receipt by EPA, you must identify docket ID number OPP–2003–0246 in the subject line on the first page of your submission. All requests must be in writing, and must be mailed or delivered to the Hearing Clerk on or before September 29, 2003.

1. *Filing the request*. Your objection must specify the specific provisions in the regulation that you object to, and the grounds for the objections (40 CFR 178.25). If a hearing is requested, the objections must include a statement of the factual issues(s) on which a hearing is requested, the requestor's contentions on such issues, and a summary of any evidence relied upon by the objector (40 CFR 178.27). Information submitted in connection with an objection or hearing request may be claimed confidential by marking any part or all of that information as CBI. Information so marked will not be disclosed except in accordance with procedures set forth in 40 CFR part 2. A copy of the information that does not contain CBI must be submitted for inclusion in the public record. Information not marked confidential may be disclosed publicly by EPA without prior notice.

Mail your written request to: Office of the Hearing Clerk (1900C),

Environmental Protection Agency, 1200 Pennsylvania Ave., NW., Washington, DC 20460–0001. You may also deliver your request to the Office of the Hearing Clerk in Rm.104, Crystal Mall # 2, 1921 Jefferson Davis Hwy., Arlington, VA. The Office of the Hearing Clerk is open from 8 a.m. to 4 p.m., Monday through Friday, excluding legal holidays. The telephone number for the Office of the Hearing Clerk is (703) 603–0061.

2. *Tolerance fee payment*. If you file an objection or request a hearing, you must also pay the fee prescribed by 40 CFR 180.33(i) or request a waiver of that fee pursuant to 40 CFR 180.33(m). You must mail the fee to: EPA Headquarters Accounting Operations Branch, Office of Pesticide Programs, P.O. Box 360277M, Pittsburgh, PA 15251. Please identify the fee submission by labeling it ''Tolerance Petition Fees.''

EPA is authorized to waive any fee requirement ''when in the judgement of the Administrator such a waiver or refund is equitable and not contrary to the purpose of this subsection.'' For additional information regarding the waiver of these fees, you may contact James Tompkins by phone at (703) 305–5697, by e-mail at *tompkins.jim@epa.gov*, or by mailing a request for information to Mr. Tompkins at Registration Division (7505C), Office of Pesticide Programs, Environmental Protection Agency, 1200 Pennsylvania Ave., NW., Washington, DC 20460–0001.

If you would like to request a waiver of the tolerance objection fees, you must mail your request for such a waiver to: James Hollins, Information Resources and Services Division (7502C), Office of Pesticide Programs, Environmental Protection Agency, 1200 Pennsylvania Ave., NW., Washington, DC 20460–0001.

3. *Copies for the Docket*. In addition to filing an objection or hearing request with the Hearing Clerk as described in Unit VII.A., you should also send a copy of your request to the PIRIB for its inclusion in the official record that is described in Unit I.B.1. Mail your copies, identified by docket ID number OPP–2003–0246, to: Public Information and Records Integrity Branch, Information Resources and Services Division (7502C), Office of Pesticide Programs, Environmental Protection Agency, 1200 Pennsylvania Ave., NW., Washington, DC 20460–0001. In person or by courier, bring a copy to the location of the PIRIB described in Unit I.B.1. You may also send an electronic copy of your request via e-mail to: *opp-docket@epa.gov*. Please use an ASCII file format and avoid the use of special characters and any form of encryption. Copies of electronic objections and hearing requests will also be accepted on disks in WordPerfect 6.1/8.0 or ASCII file format. Do not include any CBI in your electronic copy. You may also submit an electronic copy of your request at many Federal Depository Libraries.

B. When Will the Agency Grant a Request for a Hearing?

A request for a hearing will be granted if the Administrator determines that the material submitted shows the following: There is a genuine and substantial issue of fact; there is a reasonable possibility that available evidence identified by the requestor would, if established resolve one or more of such issues in favor of the requestor, taking into account uncontested claims or facts to the contrary; and resolution of the factual issues(s) in the manner sought by the requestor would be adequate to justify the action requested (40 CFR 178.32).

VIII. Statutory and Executive Order Reviews

This final rule establishes a tolerance under section 408(d) of the FFDCA in response to a petition submitted to the Agency. The Office of Management and Budget (OMB) has exempted these types of actions from review under Executive Order 12866, entitled *Regulatory Planning and Review* (58 FR 51735, October 4, 1993). Because this rule has been exempted from review under Executive Order 12866 due to its lack of significance, this rule is not subject to Executive Order 13211, *Actions Concerning Regulations That Significantly Affect Energy Supply, Distribution, or Use* (66 FR 28355, May 22, 2001). This final rule does not contain any information collections subject to OMB approval under the Paperwork Reduction Act (PRA), 44 U.S.C. 3501 *et seq.*, or impose any enforceable duty or contain any unfunded mandate as described under Title II of the Unfunded Mandates Reform Act of 1995 (UMRA) (Public Law 104–4). Nor does it require any special considerations under Executive Order 12898, entitled *Federal Actions to Address Environmental Justice in Minority Populations and Low-Income Populations* (59 FR 7629, February 16, 1994); or OMB review or any Agency action under Executive Order 13045, entitled *Protection of Children from Environmental Health Risks and Safety Risks* (62 FR 19885, April 23, 1997). This action does not involve any technical standards that would require Agency consideration of voluntary consensus standards pursuant to section 12(d) of the National Technology Transfer and Advancement Act of 1995 (NTTAA), Public Law 104–113, section 12(d) (15 U.S.C. 272 note). Since tolerances and exemptions that are established on the basis of a petition under section 408(d) of the FFDCA, such as the tolerance in this final rule, do not require the issuance of a proposed rule, the requirements of the Regulatory Flexibility Act (RFA) (5 U.S.C. 601 *et seq.*) do not apply. In addition, the Agency has determined that this action will not have a substantial direct effect on States, on the relationship between the national government and the States, or on the distribution of power and responsibilities among the various levels of government, as specified in Executive Order 13132, entitled *Federalism* (64 FR 43255, August 10, 1999). Executive Order 13132 requires EPA to develop an accountable process to ensure ''meaningful and timely input by State and local officials in the development of regulatory policies that have federalism implications.'' ''Policies that have federalism implications'' is defined in the Executive order to include regulations that have ''substantial direct effects on the States, on the relationship between the national government and the States, or on the distribution of power and responsibilities among the various levels of government.'' This final rule directly regulates growers, food processors, food handlers and food retailers, not States. This action does not alter the relationships or distribution of power and responsibilities established by Congress in the preemption provisions of section 408(n)(4) of the FFDCA. For these same reasons, the Agency has determined that this rule does not have any ''tribal implications'' as described in Executive Order 13175, entitled *Consultation and Coordination with Indian Tribal Governments* (65 FR 67249, November 6, 2000). Executive Order 13175, requires EPA to develop an accountable process to ensure ''meaningful and timely input by tribal officials in the development of regulatory policies that have tribal implications.'' ''Policies that have tribal implications'' is defined in the Executive order to include regulations that have ''substantial direct effects on one or more Indian tribes, on the relationship between the Federal Government and the Indian tribes, or on the distribution of power and responsibilities between the Federal Government and Indian tribes.'' This rule will not have substantial direct effects on tribal governments, on the relationship between the Federal

Government and Indian tribes, or on the distribution of power and responsibilities between the Federal Government and Indian tribes, as specified in Executive Order 13175. Thus, Executive Order 13175 does not apply to this rule.

IX. Congressional Review Act

The Congressional Review Act, 5 U.S.C. 801 *et seq.*, as added by the Small Business Regulatory Enforcement Fairness Act of 1996, generally provides that before a rule may take effect, the agency promulgating the rule must submit a rule report, which includes a copy of the rule, to each House of the Congress and to the Comptroller General of the United States. EPA will submit a report containing this rule and other required information to the U.S. Senate, the U.S. House of Representatives, and the Comptroller General of the United States prior to publication of this final rule in the **Federal Register**. This final rule is not a ''major rule'' as defined by 5 U.S.C. 804(2).

List of Subjects in 40 CFR Part 180

Environmental protection, Administrative practice and procedure, Agricultural commodities, Pesticides and pests, Reporting and record keeping requirements.

Dated: July 21, 2003.

James Jones,

Director, Office of Pesticide Programs.

■ Therefore, 40 CFR chapter I is amended as follows:

PART 180—[AMENDED]

■ 1. The authority citation for part 180 continues to read as follows:

Authority: 21 U.S.C. 321(q), 346(a) and 371.

■ 2. Section 180.589 is added to read as follows:

§ 180.589 Boscalid; tolerances for residues.

(a) *General.* (1) Tolerances are established for residues of the fungicide boscalid, 3-pyridinecarboxamide, 2-chloro-N-(4'-chloro[1,1'-biphenyl]-2-yl) in or on the following raw agricultural commodities:

Commodity	Parts per million
Almond hulls	3.0
Berries, group 13	3.5
Canola, refined oil	5.0
Canola, seed	3.5
Cucumber	0.20
Fruit, stone, group 12	1.7
Grape	3.5
Grape, raisin	8.5
Lettuce, head	6.5
Lettuce, leaf	11.0
Nut, tree, group 14	0.70
Peanut	0.05
Peanut, meal	0.15
Peanut, refined oil	0.15
Peppermint, tops	30.0
Pistachio	0.70
Spearmint, tops	30.0
Strawberry	1.2
Sunflower, seed	0.60
Vegetable, Brassica leafy, head and stem, subgroup 5A	3.0
Vegetable, Brassica leafy, leafy greens, subgroup 5B	18.0
Vegetable, bulb, group 3	3.0
Vegetable, cucurbit, group 9, except cucumber	1.6
Vegetable, fruiting, group 8	1.2
Vegetable, legume, dried shell pea and bean (except soybean), subgroup 6C, except cowpea, field pea, and grain lupin	2.5
Vegetable, legume, edible podded, subgroup 6A	1.6
Vegetable, legume, succulent shelled pea and bean, subgroup 6B, except cowpea	0.6
Vegetable, root, subgroup 1A , except sugar beet, garden beet, radish, and turnip	0.7
Vegetable, tuberous and corm, subgroup 1C	0.05

(2) Tolerances are established for the combined residues of the fungicide boscalid, 3-pyridinecarboxamide, 2-chloro-N-(4'-chloro[1,1'-biphenyl]-2-yl) and metabolites 2-chloro-N-(4'-chloro-5-hydroxy-biphenyl-2-yl)nicotinamide and glucuronic acid conjugate of 2-chloro-N-(4'-chloro-5-hydroxy-biphenyl-2-yl)nicotinamide in or on the following food commodities:

Commodity	Parts per million
Cattle, fat	0.30
Cattle, meat	0.10
Cattle, meat byproducts	0.35
Egg	0.02
Goat, fat	0.30
Goat, meat	0.10
Goat, meat, byproducts	0.35
Hog, fat	0.10
Hog, meat	0.05
Hog, meat byproducts	0.10
Horse, fat	0.30
Horse, meat	0.10
Horse, meat byproducts	0.35
Milk	0.10
Poultry, fat	0.05
Poultry, meat	0.05
Poultry, meat, byproduct	0.10
Sheep, fat	0.30
Sheep, meat	0.10
Sheep, meat byproducts	0.35

(b) *Section 18 emergency exemptions.* [Reserved]

(c) *Tolerances with regional registration.* [Reserved]

(d) *Indirect or inadvertent residues.* Tolerances are established for residues of the fungicide boscalid, 3-pyridinecarboxamide, 2-chloro-N-(4'-chloro[1,1'-biphenyl]-2-yl) in or on the following raw agricultural commodities when present therein as a result of application of boscalid to the growing crops in paragraph (a)(1) of this section:

Commodity	Parts per million
Animal feed, nongrass, group 18, forage	1.0
Animal feed, nongrass, group 18, hay	2.0
Animal feed, nongrass, group 18, seed	0.05
Beet, garden, roots	1.0
Beet, sugar, roots	1.0
Cotton, gin byproducts	0.30
Cotton, undelinted seed	0.05
Cowpea, seed	0.1
Flax seed	3.5
Grain, cereal, forage, fodder and straw, group 16, fodder	1.5
Grain, cereal, forage, fodder and straw, group 16, forage	2.0
Grain, cereal, forage, fodder and straw, group 16, straw	3.0
Grain, cereal, group 15	0.20
Grass, forage, fodder, and hay, group 17, forage	2.0
Grass, forage, fodder, and hay, group 17, hay	8.0
Grass, forage, fodder, and hay, group 17, seed screenings	0.20
Grass, forage, fodder, and hay, group 17, straw	0.30
Lupin, grain, grain	0.1
Pea, field, seed	0.1
Radish, roots	1.0
Rice, hulls	0.50
Soybean, hulls	0.20
Soybean, seed	0.10
Turnip, roots	1.0
Vegetable, leafy, group 4, except lettuce	1.0
Vegetable, legume, foliage, group 7, forage	1.5
Vegetable, legume, foliage, group 7, hay	2.0
Vegetable, legume, foliage, group 7, vines	0.05
Vegetable, root and tuber, leaves, group 2	1.0

[FR Doc. 03–19357 Filed 7–29–03; 8:45 am]

BILLING CODE 6560–50–S

ENVIRONMENTAL PROTECTION AGENCY

40 CFR Part 261

[SW–FRL–7537–5]

Hazardous Waste Management System; Identification and Listing of Hazardous Waste Final Exclusion

AGENCY: Environmental Protection Agency (EPA).

ACTION: Final rule.

SUMMARY: The EPA (also, ''the Agency'' or ''we'' in this preamble) is granting petitions to exclude (or ''delist'') wastewater treatment plant sludge from conversion coating on aluminum generated by six automobile assembly facilities in the State of Michigan from the list of hazardous wastes. The facilities include three plants owned and operated by General Motors Corporation (GM) (Pontiac East-Pontiac, Hamtramck-Detroit, Flint Truck-Flint), one plant owned and operated by GM with an onsite wastewater treatment plant owned by the City of Lansing and operated by Trigen/Cinergy-USFOS of Lansing LLC (Lansing Grand River-Lansing), and two plants owned and operated by Ford Motor Company (Wixom Assembly Plant-Wixom, Michigan Truck/Wayne Integrated Stamping and Assembly Plant-Wayne).

Today's action conditionally excludes the petitioned wastes from the requirements of hazardous waste regulations under the Resource Conservation and Recovery Act (RCRA) when disposed of in a lined Subtitle D landfill which is permitted, licensed, or registered by a State to manage industrial solid waste. The exclusions were proposed on March 7, 2002 as part of an expedited process to evaluate these wastes under a pilot project developed with the Michigan Department of Environmental Quality (MDEQ). The rule also imposes testing conditions for wastes generated in the future to ensure that these wastes continue to qualify for delisting.

EFFECTIVE DATE: This rule is effective on July 30, 2003.

ADDRESSES: The RCRA regulatory docket for this final rule, number R5–MIECOS–03, is located at the U.S. EPA Region 5, 77 W. Jackson Blvd., Chicago, IL 60604, and is available for viewing from 8 a.m. to 4 p.m., Monday through Friday, excluding Federal holidays. Call Todd Ramaly at (312) 353–9317 for appointments. The public may copy material from the regulatory docket at $0.15 per page.

FOR FURTHER INFORMATION CONTACT: For technical information concerning this document, contact Todd Ramaly at the address above or at (312) 353–9317.

SUPPLEMENTARY INFORMATION: The information in this section is organized as follows:

I. Background
  A. What is a delisting petition?
  B. What regulations allow a waste to be delisted?
II. The Expedited Process for Delisting
  A. Why was the expedited process developed for this waste?
  B. What is the expedited process to delist F019?
III. EPA's Evaluation of These Petitions
  A. What information was submitted in support of these petitions?
  B. How did EPA evaluate the information submitted?
IV. Public Comments Received on the Proposed Exclusion
  A. Who submitted comments on the proposed rule?
  B. Comments Received and Responses From EPA
V. Final Rule Granting these Petitions
  A. What decision is EPA finalizing?
  B. What are the terms of this exclusion?
  C. When is the delisting effective?
  D. How does this action affect the states?
VI. Regulatory Impact
VII. Congressional Review Act

I. Background

A. What Is a Delisting Petition?

A delisting petition is a request from a generator to exclude waste from the list of hazardous wastes under RCRA regulations. In a delisting petition, the petitioner must show that waste generated at a particular facility does not meet any of the criteria for which EPA listed the waste as set forth in Title 40 Code of Federal Regulations (40 CFR) § 261.11 and the background document for the waste. In addition, a petitioner must demonstrate that the waste does not exhibit any of the hazardous waste characteristics (that is, ignitability, reactivity, corrosivity, and toxicity) and must present sufficient information for us to decide whether factors other than those for which the waste was listed warrant retaining it as a hazardous waste. (See 40 CFR 260.22, 42 U.S.C. 6921(f) and the background documents for a listed waste.)

Generators remain obligated under RCRA to confirm that their waste remains nonhazardous based on the hazardous waste characteristics even if EPA has ''delisted'' the wastes and to ensure that future generated wastes meet the conditions set.

B. What Regulations Allow a Waste To Be Delisted?

Under 40 CFR 260.20, 260.22, and 42 U.S.C. 6921(f), facilities may petition the EPA to remove their wastes from hazardous waste control by excluding them from the lists of hazardous wastes contained in 40 CFR 261.31 and 261.32. Specifically, 40 CFR 260.20 allows any person to petition the Administrator to modify or revoke any provision of parts 260 through 266, 268, and 273 of 40 CFR. 40 CFR 260.22 provides a generator the opportunity to petition the Administrator to exclude a waste on a ''generator specific'' basis from the hazardous waste lists.

II. The Expedited Process for Delisting

A. Why Was the Expedited Process Developed for This Waste?

Automobile manufacturers are adding aluminum to automobiles, which may result in increased fuel economy. However, when aluminum is conversion coated in the automobile assembly process, the resulting wastewater treatment sludge must be managed as EPA hazardous waste F019. A number of automotive assembly plants use a similar manufacturing process which generates a similar F019 waste likely to be nonhazardous. This similarity of manufacturing processes and the resultant wastes provides an opportunity for the automobile industry to be more efficient in submitting delisting petitions and EPA in evaluating them. Efficiency may be gained and time saved by using a standardized approach for gathering, submitting and evaluating data. Therefore, EPA, in conjunction with MDEQ, developed a pilot project to expedite the delisting process. This approach to making delisting determinations for this group of facilities is efficient while still being consistent with current laws and regulations and protective of human health and the environment.

By removing regulatory controls under RCRA, EPA is facilitating the use of aluminum in cars. EPA believes that incorporating aluminum in cars will be advantageous to the environment since lighter cars are capable of achieving better fuel economy.

B. What Is the Expedited Process To Delist F019?

The expedited process to delist F019 is an approach developed through a Memorandum of Understanding (MOU) with MDEQ for gathering and evaluating data in support of multiple petitions from automobile assembly plants. The expedited delisting process is applicable to wastes generated by automobile and light truck assembly plants in the State of Michigan which use a similar manufacturing process and generate similar F019 waste.

Based on available historical data and other information, the expedited process identified 70 constituents which might be of concern in the waste and provides that the F019 sludge generated by automobile assembly plants may be delisted if the levels of the 70 constituents do not exceed the allowable levels established for each constituent in this rulemaking. The maximum annual quantity of waste generated by any single facility which may be covered by an expedited delisting is 3,000 cubic yards, however, delisting levels were also proposed for smaller quantities of waste (1,000 and 2,000 cubic yards).

This expedited delisting process provides an opportunity for the automobile industry to be more efficient in preparing petitions and for the EPA to be more efficient in evaluating them.

III. EPA's Evaluation of These Petitions

A. What Information Was Submitted in Support of These Petitions?

Each facility submitted certification that its process was the same as the process described in the MOU with MDEQ. See 67 FR 10341, March 7, 2002. Each facility also submitted an assertion that its waste does not meet the criteria for which F019 waste was listed and there are no other factors which might cause the waste to be hazardous.

To support its petition, each facility collected 6 samples representing waste generated over 6 weeks. Each sample: (1) Was analyzed for total analyses of the 70 constituents of concern; (2) was analyzed for Toxicity Characteristic Leaching Procedure (TCLP), SW–846 Method 1311, analyses of the 70 constituents of concern; (3) was analyzed for oil and grease; (4) with more than 1% oil and grease was analyzed for leachable metals using the Extraction Procedure for Oily Wastes (OWEP), SW–846 Method 1330A, in lieu of Method 1311; (5) was analyzed for total constituent analyses for sulfide and cyanide; (6) was measured of pH and determination that waste is not corrosive (see 40 CFR 261.22); and (7) had a determination made that the waste was not reactive or ignitable. (See 40 CFR 261.21 and 40 CFR 261.23.) All sampling and analysis was done in accordance with the sampling and analysis plan which is an appendix to the MOU and is available in the docket for this rule. The data submitted included the appropriate QA/QC information as required in the sampling and analysis plan and was validated by a third party.

A few minor changes in the sampling approach were made prior to the sampling. Instead of sampling from six different roll-off boxes, which would have required multiple sampling events or long-term storage of full roll-off boxes, the facilities were allowed to fill 55-gallon drums with aliquots from each discharge from the filter press so that each drum represented a week's worth of sludge. All drums were then sampled on the same day shortly after the end of the six-week period. The maximum values of constituents detected in any sample of the waste water treatment plant sludge are summarized in the following table along with the maximum allowable concentrations in the waste. The table also includes the maximum allowable levels in groundwater, as evaluated by the Delisting Risk Assessment Software (DRAS). The groundwater levels used by DRAS are the more conservative of either the Safe Drinking Water Act Maximum Contaminant Level (MCL) or the value calculated by DRAS based on target risk levels.

Constituent	Maximum concentration detected and maximum allowable delisting level (DL)								Maximum allowable ground-water concentration (μg/L)
	Ford Wayne	Ford Wixom	GM LGR	DL (2,000 yd^3)	GM Hamtramck	GM Flint Truck	GM Pontiac	DL (3,000 yd^3)	
Constituents in Leachate (mg/L):									
acetone	0.39J	<0.1	<0.1	228	0.98	0.82	0.42	171	3,750
n-butyl alcohol	<0.2	<0.2	0.52	228	2.8	<1.0	<0.2	171	3,750
ethylbenzene	0.009	0.033	0.007	42.6	0.028	<0.01	0.003	31.9	700
formaldehyde	0.55	0.27	1.2	84.2	3	0.32	0.62	63	1,380
methyl ethyl ketone	<0.05	<0.05	<0.05	200	<0.13	0.6	<0.05	200	22,600
toluene	0.004	0.13	<0.1	60.8	<0.1	<0.1	<0.1	45.6	1,000
trichloroethene	<0.002	0.003	<0.002	0.304	<0.005	<0.01	<0.002	0.228	5.00
xylene	0.096	0.4	<0.05	608	0.23	<0.25	<0.05	456	10,000
bis (2ethylhexyl) phthalate	<0.1	<0.1	<0.1	0.0896	<0.1	<0.1	<0.1	0.0671	1.47
butyl benzyl phthalate	<0.1	<0.1	<0.1	92.9	0.013	<0.1	<0.1	69.6	1,450
naphthalene	<0.02	<0.02	<0.02	15	0.021	0.001	0.002	11.2	246
p-cresol	1.25	0.079	0.006	11.4	0.56	0.29	0.1	8.55	188
antimony	0.0088J	<0.5	<0.5	0.659	0.24	0.22	0.29	0.494	6.00
arsenic	0.0135J	0.23	0.008	0.3	0.0107	0.0071	0.0045	0.224	4.87
barium	0.59J	0.72	0.76	100	0.57	1.68	0.5	100	2,000
beryllium	<0.041	<0.005	<0.005	1.33	0.001	<0.029	<0.062	0.998	4.00
cadmium	0.016J	0.003J	0.015	0.48	0.007	0.014	0.16	0.36	5.00
chromium	0.031J	<0.05	0.043	4.95	0.056	0.53	0.28	3.71	100
cobalt	0.027J	0.009J	0.13	72.1	0.032	0.035	0.027	54	2,250
lead	0.14J	0.019J	<0.1	5	0.069	1.33	0.24	5	15.0
mercury	0.0002J	<0.0002	<0.0002	0.2	<0.0003	<0.0006	0.0004	0.2	2.00
nickel	33.4J	2.86	58.3	90.5	19	28.3	23.7	67.8	750
selenium	0.51J	<0.4	0.15	1.0	0.29	0.27	0.56	1.0	50.0
silver	0.022J	0.008J	0.019	5.0	<0.06	0.021	<0.088	5.0	187
thallium	0.0029J	<0.2	0.062	0.282	0.0014	<0.0178	0.0021	0.211	2.00
tin	6.31	<0.5	<0.5	721	19.7	9.3	16.6	540	22,500
vanadium	0.01J	<0.02	<0.02	67.6	0.008	0.017	0.03	50.6	263
zinc	6.495	0.87	23.9	898	74.1	17	5.43	673	11,300
Total Constituent Concentration in Waste (mg/kg):									
butanol	<2.5	<2.5	6.3	NS	20	22	9.8	NS	

Constituent	Maximum concentration detected and maximum allowable delisting level (DL)								Maximum allowable ground-water concentration (μg/L)
	Ford Wayne	Ford Wixom	GM LGR	DL (2,000 yd^3)	GM Hamtramck	GM Flint Truck	GM Pontiac	DL (3,000 yd^3)	
ethylbenzene	<0.5	1.5	0.62	NS	2.8	<0.5	<0.5	NS	
formaldehyde	11	5.3	24	689	60	6.4	12	535	
methyl chloride	<2.5	<2.5	0.84	3,720	<0.25	<0.25	<0.25	2,890	
methyl ethyl ketone	<2.5	<2.5	<2.5	NS	<2.5	25	<2.5	NS	
toluene	<0.5	<0.5	<0.5	NS	5.8	<0.5	1.5	NS	
xylene	2.1	11	3.3	NS	18	<1.5	<1.5	NS	
bis (2ethylhexyl) phthalate	32J	<15	18	NS	30	<15	<15	NS	
butyl benzyl phthalate	<75	<75	<38	NS	290	<75	<75	NS	
di-n-octyl phthalate	27J	<15	18	NS	31	<15	<15	NS	
p-cresol	23	<15	18	NS	<15	<15	<15	NS	
naphthalene	<15	<15	<7.5	NS	34	<15	<15	NS	
antimony	<100	<100	<30	NS	174	<20	<50	NS	
arsenic	12J	25	18	8,140	15	10	22	7,740	
barium	306	496	57	NS	253	694	139	NS	
beryllium	<1	1.3	<1	NS	<1	<1	<1	NS	
cadmium	<1	4.7	<1	NS	1.1	<1	1.1	NS	
chromium	48.5	92	758	NS	88	223	582	NS	
cobalt	2.6	4.1	5.1	NS	2.3	<1	5.1	NS	
lead	39.5	46	<10	NS	498	485	266	NS	
mercury	0.052	0.34	0.088	8.92	0.13	<0.1	0.04	6.34	
nickel	1,170	1,270	2,460	NS	551	520	901	NS	
selenium	<10	17	<20	NS	<20	<20	21	NS	
silver	<10	<10	<2	NS	1.9	<1	<8	NS	
thallium	<50	<50	<20	NS	<20	<20	<20	NS	
tin	156.5	154	2,120	NS	1,040	242	500	NS	
vanadium	<5	13	9	NS	25	6.7	19	NS	
zinc	9,810	2,660	6,230	NS	9,180	3,130	8,690	NS	
cyanide	<0.5	<0.5	0.68	NS	<0.5	11	0.76	NS	
sulfide	231	<10	<10	NS	529	69	296	NS	

NS—not specified.
J—the numerical value is an estimated quantity.
DL—delisting level.
<—not detected at the specified concentration.
Note.—These levels represent the highest constituent concentration found in any one sample and do not necessarily represent the specific levels found in one sample.

B. How Did EPA Evaluate the Information Submitted?

EPA compared the analytical results submitted by each facility to the maximum allowable levels calculated by the DRAS and set forth in the proposed rule (March 7, 2002, 67 FR 10341). All constituents compared favorably to the allowable levels, although acrylamide, arsenic, antimony and thallium required supplemental analyses to determine that they were not present at levels which would pose a threat.

Acrylamide: Samples were initially analyzed for acrylamide using SW–846 Method 8316. The levels reported using method 8316 were in excess of the delisting levels, although the data validation report stated that this analytical method was not sufficiently selective for acrylamide in the sludge. Acrylamide is a trace contaminant in the flocculant-aide used at waste water treatment plants. The facilities submitted a detailed mass balance which concluded that the maximum possible acrylamide that could be in the sludge would be much lower than the reported detections. Rather than accept a mass balance in lieu of the reported analytical results, EPA required further supplemental analyses by a more sensitive method using SW–846 Method 8032A in Selected Ion Monitoring (SIM) mode. Four additional samples representing two days of waste were collected at each facility. No acrylamide was detected above the level of concern.

Arsenic, Thallium, and Antimony: Estimated levels of leachable arsenic reported in some samples exceeded the delisting level, while estimated levels of leachable thallium and antimony in some samples, resulted in an aggregate hazard index (HI) in excess of 1.0. Samples which were reanalyzed for these constituents using the more sensitive Method 6020 were well below the allowable levels both individually and in the aggregate. The sample from GM-Lansing Grand River was not reanalyzed for thallium and when combined with the nickel in these samples, the hazard index remained in excess of one at an annual volume of 3,000 cubic yards. To assure that the total HI remains below one, GM has requested that the annual volume of delisted waste at the Lansing Grand River plant be changed to 2,000 cubic yards, since the estimated risk from this waste decreases as the volume decreases.

Hexachlorobenzene, hexachlorobutadiene, pentachlorophenol, and 2,4 dinitrotoluene: The initial detection levels for these constituents were significantly higher than the allowable levels. To achieve lower detection levels for these constituents, samples from each facility were reanalyzed by Method 8270 using selective ion monitoring (SIM) mode. These constituents were not detected using this more sensitive method, although some detection levels were still above the allowable delisting level. We believe the analysis indicates these constituents are not present in the waste.

Methyl methacrylate: Ford did not analyze the samples for methyl methacrylate. For the annual volume

which Ford will be disposing, the allowable concentration for methyl methacrylate is too high to be a practical concern.

IV. Public Comments Received on the Proposed Exclusion

A. Who Submitted Comments on the Proposed Rule?

The EPA received public comments on the proposed notice published on March 7, 2002 from Alliance of Automobile Manufacturers, Honda of America Mfg., Inc., Alcoa Inc., and The Aluminum Association. All commenters were supportive of the proposal and suggested expanding the project and revising the listing.

B. Comments Received and Responses from EPA

(1) EPA should revise the F019 listing to specify that wastewater treatment sludge from zinc phosphating operations is not within the scope of the listing. Data gathered as a result of the Expedited Delisting Project together with the available historical data, should provide enough data to fully characterize this waste and to justify a revision of the listing.

The Agency is now considering revising the F019 listing. EPA is examining the data collected as a result of this project, as well as past data, as a basis for a possible revision to the F019 listing.

(2) EPA should issue an interpretive rule clarifying that zinc phosphating operations are outside the scope of the F019 listing.

An interpretive rule presents administrative and technical difficulties. A revision to the listing will require a rulemaking process. See response to comment (1) above.

(3) Automobile assembly facilities outside of Michigan would like to take advantage of the precedent set by this expedited delisting project to delist F019 generated by similar operations in other states and regions.

The Agency believes that the expedited delisting procedures and requirements set forth in this proposal are appropriate for similar automotive assembly facilities outside the State of Michigan, subject to the discretion of the regulatory agency (state or region).

(4) Alternatives to landfilling like recycling should be allowed within the petition process.

The Agency does not delist wastes which are recycled because the model used to estimate risk is based only on disposal of waste in a Subtitle D landfill. The risk which might result from any other scenario is not evaluated by the delisting program. However, the Agency encourages safe recycling, and variances and exclusions from the definition of solid and hazardous wastes are available for wastes which are recycled.

(5) Analytical methods should be specified in the pre-approved common sampling plan instead of requiring each participant to submit a site-specific list of methods.

Allowing the petitioner to choose an analytical method which meets the data quality objectives specific to the delisting petition provides flexibility. Data quality objectives will vary depending on the allowable levels which are a function of the volume of petitioned waste. The Agency believes that the flexibility of performance based methods results in better data.

(6) Detection limits should not be required prior to sampling since they cannot be adequately predicted without a way to estimate matrix effects.

Although matrix effects cannot be assessed in advance of laboratory analysis, a laboratory should be able to provide estimated detection levels and reporting levels which are lower than, or at least equal to, the allowable delisting level for each constituent.

(7) Since the process generating the sludge is extremely stable, verification sampling should be conducted on an annual, instead of quarterly, basis. The requirement that any process change be promptly reported and the exclusion suspended until EPA gives written approval that the delisting can continue is an adequate safeguard justifying the decrease in sample event frequency.

Verification data submitted in conjunction with past delistings of this waste have shown significant variation on a quarterly basis over longer periods of time. Annual sampling would not detect such variations. Once enough verification data are collected to support a statistical analysis, a change in the frequency of verification sampling and/or sampling parameters may be considered.

(8) The final **Federal Register** should make it clear that assembly plants that manufacture light trucks are also eligible for the project.

Today's notice specifically defines eligible facilities as inclusive of manufacturers of light trucks.

(9) The table of maximum allowable levels in the March 7, 2002 proposed rule contains errors in the columns for vinyl chloride.

The error was caused by a missing space or tab in the table. Although vinyl chloride was not detected in the waste at any of the six facilities, the maximum allowable concentrations proposed for 1,000 cubic yards of waste should have been a total of 178 milligrams per kilogram (mg/kg) and 0.00384 milligrams per liter (mg/L) in the TCLP. For 2,000 cubic yards of waste, 115 mg/kg total and 0.00234 mg/L TCLP were proposed. For 3,000 cubic yards of waste, 89.4 mg/kg total and 0.00175 mg/L TCLP were proposed.

V. Final Rule Granting these Petitions

A. What Decision Is EPA Finalizing?

Today the EPA is finalizing exclusions to conditionally delist wastewater treatment plant sludge from conversion coating on aluminum generated at the following facilities: (1) General Motors Corporation, Pontiac East Plant, in Pontiac, Michigan (3,000 cubic yards annually); (2) General Motors Corporation, Hamtramck Plant, in Detroit, Michigan (3,000 cubic yards annually); (3) General Motors Corporation, Flint Truck, in Flint, Michigan (3,000 cubic yards annually); (4) General Motors Corporation, City of Lansing, and Trigen/Cinergy-USFOS of Lansing LLC, Lansing Grand River Plant, in Lansing, Michigan (2,000 cubic yards annually); (5) Ford Motor Company, Wixom Assembly Plant, in Wixom, Michigan (2,000 cubic yards annually); and (6) Ford Motor Company, Michigan Truck/Wayne Integrated Stamping and Assembly Plant, in Wayne, Michigan (2,000 cubic yards annually).

On March 7,2002, EPA proposed to exclude or delist these wastewater treatment sludges from the list of hazardous wastes in 40 CFR 261.31 and accepted public comment on the proposed rule (67 FR 10341). EPA considered all comments received, and for reasons stated in both the proposal and this document, we believe that these wastes should be excluded from hazardous waste control.

B. What Are the Terms of This Exclusion?

The facilities must dispose of the waste in a lined Subtitle D landfill which is permitted, licensed, or registered by a state to manage industrial waste. The facilities must verify on a quarterly basis that the concentrations of the constituents of concern do not exceed the allowable levels set forth in this exclusion by obtaining and analyzing a representative sample of the waste according to the current waste analysis plan modified to include the improved methodologies discussed in section III. B.

The list of constituents for verification is a subset of those initially tested for and is based on the occurrence of

constituents at the majority of facilities and the concentrations relative to the allowable levels. Since all the facilities include significant amounts of nickel in the leachate and nickel combines with thallium targeting the liver and cadmium targeting the kidney, the total hazard index from nickel and thallium combined and/or nickel and cadmium combined shall not exceed 1.0.

This exclusion applies only to the maximum annual volumes cited in section V.A. of this preamble and is effective only if all conditions contained in this rule are satisfied.

C. When Is the Delisting Effective?

This rule is effective July 30, 2003. The Hazardous and Solid Waste Amendments of 1984 amended section 3010 of RCRA to allow rules to become effective in less than six months when the regulated community does not need the six-month period to come into compliance. This rule reduces rather than increases the existing requirements and, therefore, is effective immediately upon publication under the Administrative Procedure Act, pursuant to 5 U.S.C. 553(d).

D. How Does This Action Affect the States?

Today's exclusion is being issued under the federal RCRA delisting program. Therefore, only states subject to federal RCRA delisting provisions would be affected. This exclusion is not effective in states which have received authorization to make their own delisting decisions. Also, the exclusion may not be effective in states having a dual system that includes federal RCRA requirements and their own requirements. EPA allows states to impose their own regulatory requirements that are more stringent than EPA's, under section 3009 of RCRA. These more stringent requirements may include a provision that prohibits a federally issued exclusion from taking effect in the state. Because a dual system (that is, both federal (RCRA) and state (non-RCRA) programs) may regulate a petitioner's waste, we urge petitioners to contact the state regulatory authority to establish the status of their wastes under the state law.

EPA has also authorized some states to administer a delisting program in place of the federal program, that is, to make state delisting decisions. Therefore, this exclusion does not apply in those authorized states. If a participating facility transports the petitioned waste to or manages the waste in any state with delisting authorization, it must obtain a delisting from that state before it can manage the waste as nonhazardous in the state.

VI. Regulatory Impact

Under Executive Order 12866 (58 FR 51735, October 4, 1993), these rules are not of general applicability and therefore are not regulatory actions subject to review by the Office of Management and Budget. Because these rules are each of particular applicability relating to a particular facility, they are not subject to the regulatory flexibility provisions of the Regulatory Flexibility Act (5 U.S.C. 601 *et seq.*), or to sections 202, 204, and 205 of the Unfunded Mandates Reform Act of 1995 (UMRA) (Pub. L. 104–4). Because each of the rules will affect only a particular facility, each rule will not significantly or uniquely affect small governments, as specified in section 203 of UMRA, or communities of tribal governments, as specified in Executive Order 13175 (65 FR 67249, November 6, 2000). For the same reason, each rule will not have substantial direct effects on the States, on the relationship between the national government and the States, or on the distribution of power and responsibilities among the various levels of government, as specified in Executive Order 13132 (64 FR 43255, August 10, 1999). These rules also are not subject to Executive Order 13045 (62 FR 19885, April 23, 1997), because they are not economically significant.

These rules do not involve technical standards; thus, the requirements of section 12(c) of the National Technology Transfer and Advancement Act of 1995 (15 U.S.C. 272 note) do not apply. As required by section 3 of Executive Order 12988 (61 FR 4729, February 7, 1996), in issuing these rules, EPA has taken the necessary steps to eliminate drafting errors and ambiguity, minimize potential litigation, and provide a clear legal standard for affected conduct. These rules do not impose an information collection burden under the provisions of the Paperwork Reduction Act of 1995 (44 U.S.C. 3501 *et seq.*).

VII. Congressional Review Act

The Congressional Review Act (5 U.S.C. 801 *et seq.*) as added by the Small Business Regulatory Enforcement Fairness Act of 1996, generally provides that before a rule may take effect, the agency promulgating the rule must submit a rule report, which includes a copy of the rule, to each House of Congress and to the Comptroller General of the United States. EPA will submit a report containing these rules and other required information to the U.S. Senate, the U.S. House of Representatives, the Comptroller General of the United States prior to publication of the final rule in the **Federal Register**. Each of these rules is not a ''major rule'' as defined by 5 U.S.C. 804(2). These rules will become effective on the date of publication in the **Federal Register**.

List of Subjects in 40 CFR Part 261

Environmental protection, Hazardous waste, Recycling, and Reporting and recordkeeping requirements.

Authority: Sec. 3001(f) RCRA, 42 U.S.C. 6921(f).

Dated: July 21, 2003.

Margaret M. Guerriero,

Acting Director, Waste, Pesticides and Toxics Division.

■ For the reasons set out in the preamble, 40 CFR part 261 is amended as follows:

PART 261—IDENTIFICATION AND LISTING OF HAZARDOUS WASTE

■ 1. The authority citation for part 261 continues to read as follows:

Authority: 42 U.S.C. 6905, 6912(a), 6921, 6922, and 6938.

■ 2. In Table 1 of Appendix IX of part 261 the following wastestreams are added in alphabetical order by facility to read as follows:

Appendix IX to Part 261—Wastes Excluded Under §§ 260.20 and 260.22

TABLE 1.—WASTES EXCLUDED FROM NON-SPECIFIC SOURCES

Facility and address	Waste description
* * * * * * *	
Ford Motor Company, Michigan Truck Plant and Wayne Integrated Stamping and Assembly Plant. —Wayne, Michigan	Waste water treatment plant sludge, F019, that is generated by Ford Motor Company at the Wayne Integrated Stamping and Assembly Plant from wastewaters from both the Wayne Integrated Stamping and Assembly Plant and the Michigan Truck Plant, Wayne, Michigan at a maximum annual rate of 2,000 cubic yards per year. The sludge must be disposed of in a lined landfill with leachate collection, which is licensed, permitted, or otherwise authorized to accept the delisted wastewater treatment sludge in accordance with 40 CFR part 258. The exclusion becomes effective as of July 30, 2003. 1. Delisting Levels: (A) The TCLP concentrations measured in any sample may not exceed the following levels (mg/L): Antimony—0.659; Arsenic—0.3; Cadmium—0.48; Chromium—4.95; Lead—5; Nickel—90.5; Selenium—1; Thallium—0.282; Tin—721; Zinc—898; p-Cresol—11.4; and Formaldehyde—84.2. (B) The total concentrations measured in any sample may not exceed the following levels (mg/kg): Mercury—8.92; and Formaldehyde—689. (C) The sum of the ratios of the TCLP concentrations to the delisting levels for nickel and thallium and for nickel and cadmium shall not exceed 1.0. 2. Quarterly Verification Testing: To verify that the waste does not exceed the specified delisting levels, the facility must collect and analyze one waste sample on a quarterly basis. 3. Changes in Operating Conditions: The facility must notify the EPA in writing if the manufacturing process, the chemicals used in the manufacturing process, the treatment process, or the chemicals used in the treatment process significantly change. The facility must handle wastes generated after the process change as hazardous until it has demonstrated that the wastes continue to meet the delisting levels and that no new hazardous constituents listed in appendix VIII of part 261 have been introduced and it has received written approval from EPA. 4. Data Submittals: The facility must submit the data obtained through verification testing or as required by other conditions of this rule to both U.S. EPA Region 5, Waste Management Branch (DW–8J), 77 W. Jackson Blvd., Chicago, IL 60604 and MDEQ, Waste Management Division, Hazardous Waste Program Section, at P.O. Box 30241, Lansing, Michigan 48909. The quarterly verification data and certification of proper disposal must be submitted annually upon the anniversary of the effective date of this exclusion. The facility must compile, summarize, and maintain on site for a minimum of five years records of operating conditions and analytical data. The facility must make these records available for inspection. All data must be accompanied by a signed copy of the certification statement in 40 CFR 260.22(i)(12). 5. Reopener Language—(a) If, anytime after disposal of the delisted waste, the facility possesses or is otherwise made aware of any data (including but not limited to leachate data or groundwater monitoring data) relevant to the delisted waste indicating that any constituent is at a level in the leachate higher than the specified delisting level, or is in the groundwater at a concentration higher than the maximum allowable groundwater concentration in paragraph (e), then the facility must report such data, in writing, to the Regional Administrator within 10 days of first possessing or being made aware of that data. (b) Based on the information described in paragraph (a) and any other information received from any source, the Regional Administrator will make a preliminary determination as to whether the reported information requires Agency action to protect human health or the environment. Further action may include suspending, or revoking the exclusion, or other appropriate response necessary to protect human health and the environment. (c) If the Regional Administrator determines that the reported information does require Agency action, the Regional Administrator will notify the facility in writing of the actions the Regional Administrator believes are necessary to protect human health and the environment. The notice shall include a statement of the proposed action and a statement providing the facility with an opportunity to present information as to why the proposed Agency action is not necessary or to suggest an alternative action. The facility shall have 30 days from the date of the Regional Administrator's notice to present the information. (d) If after 30 days the facility presents no further information, the Regional Administrator will issue a final written determination describing the Agency actions that are necessary to protect human health or the environment. Any required action described in the Regional Administrator's determination shall become effective immediately, unless the Regional Administrator provides otherwise. (e) Maximum Allowable Groundwater Concentrations (ug/L): Antimony—6; Arsenic—4.87; Cadmium—5; Chromium—100; Lead—15; Nickel—750; Selenium—50; Thallium—2; Tin—22,500; Zinc—11,300; p-Cresol—188; and Formaldehyde—1,380.
Ford Motor Company, Wixom Assembly Plant: —Wixom, Michigan	Waste water treatment plant sludge, F019, that is generated by Ford Motor Company at the Wixom Assembly Plant, Wixom, Michigan at a maximum annual rate of 2,000 cubic yards per year. The sludge must be disposed of in a lined landfill with leachate collection, which is licensed, permitted, or otherwise authorized to accept the delisted wastewater treatment sludge in accordance with 40 CFR Part 258. The exclusion becomes effective as of July 30, 2003. The conditions in paragraphs (2) through (5) for Ford Motor Company—Michigan Truck Plant and Wayne Integrated Stamping Plant—Wayne, Michigan also apply. Delisting Levels: (A) The TCLP concentrations measured in any sample may not exceed the following levels (mg/L): Antimony—0.659; Arsenic—0.3; Cadmium—0.48; Chromium—4.95; Lead—5; Nickel—90.5; Selenium—1; Thallium—0.282; Tin—721; Zinc—898; p-Cresol—11.4; and Formaldehyde—84.2. (B) The total concentrations measured in any sample may not exceed the following levels (mg/kg): Mercury—8.92; and Formaldehyde—689. (C) The sum of the ratios of the TCLP concentrations to the delisting levels for nickel and thallium and for nickel and cadmium shall not exceed 1.0.

TABLE 1.—WASTES EXCLUDED FROM NON-SPECIFIC SOURCES—Continued

Facility and address	Waste description
General Motors Corporation, Flint Truck:	
—Flint, Michigan	Waste water treatment plant sludge, F019, that is generated by General Motors Corporation at Flint Truck, Flint, Michigan at a maximum annual rate of 3,000 cubic yards per year. The sludge must be disposed of in a lined landfill with leachate collection, which is licensed, permitted, or otherwise authorized to accept the delisted wastewater treatment sludge in accordance with 40 CFR part 258. The exclusion becomes effective as of July 30, 2003. The conditions in paragraphs (2) through (5) for Ford Motor Company—Michigan Truck Plant and Wayne Integrated Stamping Plant—Wayne, Michigan also apply. Delisting Levels: (A) The TCLP concentrations measured in any sample may not exceed the following levels (mg/L): Antimony—0.494; Arsenic—0.224; Cadmium—0.36; Chromium—3.71; Lead—5; Nickel—67.8; Selenium—1; Thallium—0.211; Tin—540; Zinc—673; p-Cresol—8.55; and Formaldehyde—63. (B) The total concentrations measured in any sample may not exceed the following levels (mg/kg): Mercury—6.34; and Formaldehyde—535. (C) The sum of the ratios of the TCLP concentration to the delisting level for nickel and thallium and for nickel and cadmium shall not exceed 1.0.
General Motors Corporation, Hamtramck:	
—Detroit, Michigan	Waste water treatment plant sludge, F019, that is generated by General Motors Corporation at Hamtramck, Detroit, Michigan at a maximum annual rate of 3,000 cubic yards per year. The sludge must be disposed of in a lined landfill with leachate collection, which is licensed, permitted, or otherwise authorized to accept the delisted wastewater treatment sludge in accordance with 40 CFR part 258. The exclusion becomes effective as of July 30, 2003. The conditions in paragraphs (2) through (5) for Ford Motor Company—Michigan Truck Plant and Wayne Integrated Stamping Plant—Wayne, Michigan also apply. A maximum allowable groundwater concentration of 3,750 μg/L for n-butyl alcohol is added to paragraph (5)(e). Delisting Levels: (A) The TCLP concentrations measured in any sample may not exceed the following levels (mg/L): Antimony—0.494; Arsenic—0.224; Cadmium—0.36; Chromium—3.71; Lead—5; Nickel—67.8; Selenium—1; Thallium—0.211; Tin—540; Zinc—673; p-Cresol—8.55; Formaldehyde—63; and n-Butyl alcohol—171. (B) The total concentrations measured in any sample may not exceed the following levels (mg/kg): Mercury—6.34; and Formaldehyde—535. (C) The sum of the ratios of the TCLP concentration to the delisting level for nickel and thallium and for nickel and cadmium shall not exceed 1.0.
General Motors Corporation, Pontiac East:	
—Pontiac, Michigan	Waste water treatment plant sludge, F019, that is generated by General Motors Corporation at Pontiac East, Pontiac, Michigan at a maximum annual rate of 3,000 cubic yards per year. The sludge must be disposed of in a lined landfill with leachate collection, which is licensed, permitted, or otherwise authorized to accept the delisted wastewater treatment sludge in accordance with 40 CFR part 258. The exclusion becomes effective as of July 30, 2003. The conditions in paragraphs (2) through (5) for Ford Motor Company—Michigan Truck Plant and Wayne Integrated Stamping Plant—Wayne, Michigan also apply. Delisting Levels: (A) The TCLP concentrations measured in any sample may not exceed the following levels (mg/L): Antimony—0.494; Arsenic—0.224; Cadmium—0.36; Chromium—3.71; Lead—5; Nickel—67.8; Selenium—1; Thallium—0.211; Tin—540; Zinc—673; p-Cresol—8.55; and Formaldehyde—63. (B) The total concentrations measured in any sample may not exceed the following levels (mg/kg): Mercury—6.34; and Formaldehyde—535. (C) The sum of the ratios of the TCLP concentrations to the delisting levels for nickel and thallium and for nickel and cadmium shall not exceed 1.0.
Trigen/Cinergy-USFOS of Lansing LLC at General Motors Corporation, Lansing Grand River:	
—Lansing, Michigan	Waste water treatment plant sludge, F019, that is generated at General Motors Corporation's Lansing Grand River (GM-Grand River) facility by Trigen/Cinergy-USFOS of Lansing LLC exclusively from wastewaters from GM-Grand River, Lansing, Michigan at a maximum annual rate of 2,000 cubic yards per year. The sludge must be disposed of in a lined landfill with leachate collection, which is licensed, permitted, or otherwise authorized to accept the delisted wastewater treatment sludge in accordance with 40 CFR Part 258. The exclusion becomes effective as of July 30, 2003. The conditions in paragraphs (2) through (5) for Ford Motor Company—Michigan Truck Plant and Wayne Integrated Stamping Plant—Wayne, Michigan also apply. Delisting Levels: (A) The TCLP concentrations measured in any sample may not exceed the following levels (mg/L): Antimony—0.659; Arsenic—0.3; Cadmium—0.48; Chromium—4.95; Lead—5; Nickel—90.5; Selenium—1; Thallium—0.282; Tin—721; Zinc—898; p-Cresol—11.4; and Formaldehyde—84.2. (B) The total concentrations measured in any sample may not exceed the following levels (mg/kg): Mercury—8.92; and Formaldehyde—689. (C) The sum of the ratios of the TCLP concentrations to the delisting levels for nickel and thallium and for nickel and cadmium shall not exceed 1.0.

[FR Doc. 03–19285 Filed 7–29–03; 8:45 am]
BILLING CODE 6560–50–P

ENVIRONMENTAL PROTECTION AGENCY

40 CFR Parts 261 and 279

[RCRA–1998–0015; FRL–7537–4]

RIN 2050–AF07

Hazardous Waste Management System; Identification and Listing of Hazardous Waste; Recycled Used Oil Management Standards

AGENCY: Environmental Protection Agency.

ACTION: Final rule.

SUMMARY: Today's final rule eliminates drafting errors and ambiguities in the used oil management standards. Specifically, this rule clarifies when used oil contaminated with polychlorinated biphenyls (PCBs) is regulated under the RCRA used oil management standards and when it is not; that mixtures of conditionally exempt small quantity generator (CESQG) waste and used oil are subject to the RCRA used oil management standards irrespective of how that mixture is to be recycled; and that the initial marketer of used oil that meets the used oil fuel specification need only keep a record of a shipment of used oil to the facility to which the initial marketer delivers the used oil.

DATES: This final rule will become effective on September 29, 2003.

ADDRESSES: Public comments and supporting materials are available for viewing in the EPA Docket Center, located at 1301 Constitution Avenue, NW, Washington, DC. The Docket ID Number is RCRA–1998–0015. The index and some supporting materials are available electronically. See the **SUPPLEMENTARY INFORMATION** section for information on accessing them.

FOR FURTHER INFORMATION CONTACT: For general information, contact the RCRA Call Center at (800) 424–9346 or TDD (800) 553–7672 (hearing impaired). In the Washington, DC metropolitan area, call (703) 412–9810 or TDD (703) 412–3323.

For more detailed information on specific aspects of this rulemaking, contact Mike Svizzero by mail at Office of Solid Waste (5303W), U.S. Environmental Protection Agency, 1200 Pennsylvania Avenue NW., Washington, DC 20460, by phone at (703) 308–0046, or by Internet e-mail at *svizzero.michael@epa.gov.*

SUPPLEMENTARY INFORMATION:

I. General Information

EPA has established an official public docket for this action under Docket ID No. RCRA–1998–0015. The official public docket is the collection of materials that is available for public viewing at the OSWER Docket in the EPA Docket Center (EPA/DC), EPA West Building, Room B102, 1301 Constitution Ave NW., Washington, DC. The EPA Docket Center Public Reading Room is open from 8:30 a.m. to 4:30 p.m., Monday through Friday, excluding legal holidays. The telephone number for the Public Reading Room is (202) 566–1744, and the telephone number for the OSWER Docket is (202) 566–0270.

You may access this **Federal Register** document electronically through the EPA Internet under the ''**Federal Register**'' listings at *http://www.epa.gov/fedrgstr/*.

An electronic version of the public docket is available through EPA's electronic public docket and comment system, EPA Dockets. You may use EPA Dockets at *http://www.epa.gov/edocket/* to view public comments, access the index listing of the contents of the official public docket, and to access those documents in the public docket that are available electronically. Although not all docket materials may be available electronically, you may still access any of the publicly available docket materials through the docket facility identified above. Once in the system, select ''search'' and then key in the appropriate docket identification number.

Outline of Today's Document

I. Authority
II. Background and Regulatory Amendments
  A. Applicability of the Used Oil Management Standards to PCB Contaminated Used Oil
  B. Mixtures of CESQG Waste and Used Oil
  C. Clarification of the Recordkeeping Requirements for Marketers of On-Specification Used Oil
III. State Authority
IV. Statutory and Executive Order Reviews
  A. Executive Order 12866: Regulatory Planning and Review
  B. Paperwork Reduction Act
  C. Regulatory Flexibility Act
  D. Unfunded Mandates Reform Act
  E. Executive Order 13132: Federalism
  F. Executive Order 13175: Consultation and Coordination with Indian Tribal Governments
  G. Executive Order 13045: Children's Health
  H. Executive Order 13211: Energy Effects
  I. National Technology Transfer and Advancement Act of 1995
  J. Congressional Review Act
V. Effective Date

I. Authority

These regulations are issued under the authority of sections 1004, 1006, 2002(a), 3001 through 3007, 3010, 3013, 3014, 3016 through 3018, and 7004 of the Solid Waste Disposal Act, as amended by the Resource Conservation and Recovery Act, and as amended by the Used Oil Recycling Act, as amended, 42 U.S.C. 6901, 6905, 6912(a), 6921 through 6927, 6930, 6934, 6935, 6937 through 6939 and 6974.

II. Background and Regulatory Amendments

Today's final rule reinstates, with some modifications, three amendments to the RCRA used oil management standards of 40 CFR Part 279. These amendments were issued on May 6, 1998 as a direct final rule, but were retracted on July 14, 1998 because of adverse public comment to the amendments (see 63 FR 24963 and 63 FR 25006). One of the withdrawn amendments, applicability of the used oil management standards to PCB contaminated used oil, was a clarification of the applicability of the RCRA used oil management standards to PCB contaminated used oil. This clarification was undertaken as part of a settlement agreement to resolve a lawsuit challenging a final rule promulgated on May 3, 1993, (58 FR 26420) regarding EPA's used oil regulations. *Edison Electric Institute* v. *U.S. EPA* (D.C. Circuit No. 93–1474). Specifically, the May 1993 rule corrected technical errors and provided clarifying amendments to the used oil management standards promulgated on September 10, 1992 (57 FR 41566). The other amendments reinstated today clarify (1) that mixtures of conditionally exempt small quantity generator (CESQG) waste and used oil are subject to the used oil management standards irrespective of how that mixture is to be recycled and (2) that the initial marketer of used oil that meets the used oil fuel specification need only keep a record of a shipment of used oil to the facility to which the initial marketer delivers the used oil.

A. Applicability of the Used Oil Management Standards to PCB Contaminated Used Oil

Today's rule amends 40 CFR 279.10(i) to clarify the applicability of the RCRA used oil management standards to used oil containing PCBs. The amendment clarifies that used oil that contains less than 50 ppm of PCBs is generally subject to regulation under the RCRA used oil management standards. However, the amendment notes that the

Toxic Substances Control Act (TSCA) prohibition against the dilution of PCB concentrations below regulatory thresholds (40 CFR 761.1(b)(5)) applies to the dilution of PCB-containing used oil. Used oil, therefore, that contains, or contained prior to dilution, 50 ppm or greater of PCBs is not subject to regulation under the RCRA used oil management standards, because the TSCA regulations at 40 CFR Part 761 provide comprehensive management of such used oil.

For used oil that contains PCB concentrations of 2 ppm or greater, but less than 50 ppm (other than those diluted to below 50 ppm), TSCA regulates the burning of used oil for energy recovery at 40 CFR 761.20(e). Such used oil is also regulated under the RCRA used oil management standards at 40 CFR Part 279. Table 1 shows the applicability of the RCRA and TSCA regulations as they pertain to used oil containing PCBs that is to be burned for energy recovery. Please note, under the TSCA regulations at 40 CFR 761.20(e)(2), used oil that is to be burned for energy recovery is presumed to contain 2 ppm or greater of PCBs unless shown otherwise by testing or other information. Used oil that is to be burned for energy recovery and has been shown to contain less than 2 ppm PCBs (if it has not been diluted) is subject to record keeping and retention requirements under TSCA (40 CFR 761.20(e)(2), (e)(4)) and is regulated under the RCRA used oil management standards. TSCA regulations prohibit the burning for energy recovery of used oil that contains (or contained prior to dilution) PCB concentrations of 50 ppm or greater (40 CFR 761.20(a)).

TABLE 1.—REGULATION OF USED OIL CONTAINING PCBS THAT IS TO BE BURNED FOR ENERGY RECOVERY UNDER 40 CFR PART 279 (RCRA REGULATIONS) AND 40 CFR PART 761 (TSCA REGULATIONS).

Range of PCB contamination levels in used oil (ppm)	Does RCRA regulate this used oil if it is to be burned for energy recovery? [b]	Does TSCA regulate this used oil if it is to be burned for energy recovery? [b]
Demonstrated to contain less than 2	Yes (part 279)	Yes (761.20(e)(2), (e)(4)).[a]
2 to less than 50	Yes (part 279)	Yes (761.20(e)).
50 and greater	No (part 279)	Yes (prohibited) (761.60).

[a] Used oil that is to be burned for energy recovery is presumed to contain 2 ppm or greater of PCBs unless shown otherwise by testing or other information. TSCA imposes record keeping and retention requirements.

[b] Assumes no dilution. No person may avoid any provision under TSCA specifying a PCB concentration by diluting the PCBs, unless otherwise provided. See 40 CFR 761.1(b)(5).

Used oil containing less than 50 ppm PCBs that is recycled in a manner other than being burned for energy recovery is generally excluded from TSCA requirements except where: (1) Used oil was diluted to below 50 ppm PCBs, or (2) the PCB containing used oil or source of the PCB-containing used oil to be recycled was not legally manufactured, processed, distributed in commerce or used under TSCA. See 40 CFR 761.3 (definition of ''excluded PCB products''); 761.20(a)(1); and 761.20(c). However, 40 CFR 761.20(d) of the TSCA regulations prohibits the use of used oil that contains any detectable concentration of PCBs as a sealant, coating, or dust control agent. This prohibition specifically includes road oiling and general dust control. Use of used oil as a dust suppressant is also prohibited under RCRA except in a state that has received authorization from EPA to allow use of used oil as a dust suppressant. Currently no states have received such authorization. In the event that a state were authorized to use used oil as a dust suppressant pursuant to 40 CFR 279.82, the prohibition in 40 CFR 761.20(d) would still apply, however.

Dilution of PCB-Containing Used Oil

The Agency received comment on the May 6, 1998 proposal (63 FR 24963) related to the applicability of the dilution prohibition of 40 CFR 761.1(b)(5) to used oil that contains PCBs. One commenter raised a concern that the May 6, 1998 proposal was unclear as to how PCB-contaminated used oils that have been diluted (below either the 50 ppm or 2 ppm TSCA PCB regulatory thresholds) are regulated.

Used oil that contains PCBs may not be diluted under TSCA to avoid a particular regulatory requirement unless otherwise specifically provided by the TSCA regulations. The TSCA PCB regulations at 40 CFR 761.1(b)(5) prohibit the dilution of PCBs to avoid regulatory requirements. This prohibition is repeated in the definition of ''excluded PCB products'' in 40 CFR 761.3. Accordingly, used oil that contained PCB concentrations greater than or equal to 50 ppm and that was subsequently diluted to a concentration of less than 50 ppm PCBs, is still regulated under TSCA as used oil that contains a PCB concentration of 50 ppm or greater. This diluted used oil is subject to comprehensive management under TSCA and, therefore, is not regulated under the RCRA used oil management standards. Likewise, used oil that contained a maximum PCB concentration of 2 ppm or greater, but less than 50 ppm, which is subsequently diluted to a concentration of less than 2 ppm, is still regulated under TSCA as used oil that contains a concentration greater than 2 ppm PCBs. (Note, however, that used oils of unknown concentration can be mixed with other such used oils in a common container and subsequently tested to determine if it is less than 2 ppm PCB. See 40 CFR 761.20(e)(2) and 761.60(g)(2)).

The TSCA regulations do allow, however, for the decontamination of used oil at PCB concentrations of 50 ppm or greater to a concentration below 2 ppm if specified decontamination methods (*e.g.*, filtering) are used. Such decontaminated used oil is exempt from most TSCA management standards (other than 40 CFR 761.20(e)(2), (e)(4) and 761.79(f)) and is regulated under the RCRA used oil management standards. See 40 CFR 761.79(a)(3) and 761.79(b).

Applicability of the Used Oil Fuel Specification to PCB-Containing Used Oil

There has been confusion in the regulated community that the presence of PCBs in used oil is one of the criteria for determining whether a used oil fuel subject to the RCRA used oil management standards meets the fuel specification standard such that it may be burned for energy recovery without further regulation under RCRA. In fact, one of the comments received in response to the May 6, 1998 proposal implied that used oil that contains PCB concentrations of 2 ppm or greater, but less than 50 ppm is off-specification used oil due to its PCB content. This is incorrect. As described above, the concentration of PCBs in used oil is relevant to determining whether a used

oil is subject to the RCRA used oil management standards. However, for those used oils subject to the RCRA used oil management standards, the presence of PCBs is not one of the criteria for determining whether a used oil fuel meets the used oil fuel specification.

However, used oil that contains PCB concentrations of 2 ppm or greater, but less than 50 ppm, and is burned for energy recovery is also subject to requirements under the TSCA PCB regulations, specifically 40 CFR 761.20(e). These TSCA requirements incorporate by reference certain RCRA Part 279 ''off-specification'' used oil requirements. (See the discussion below for an explanation of the regulation of PCB-containing used oil that is burned for energy recovery.)

RCRA Requirements

The RCRA used oil specification criteria are set forth at 40 CFR 279.11. The specification criteria establish which used oil fuels may be burned in nonindustrial burners without regulation under RCRA. The used oil fuel specification sets maximum allowable limits for arsenic, cadmium, chromium, lead, and total halogens, as well as a minimum flash point. Although the PCB regulations promulgated pursuant to TSCA are referenced in a note to Table 1 in § 279.11, the presence of PCBs in used oil is not one of the criteria for determining whether used oil that is to be burned for energy recovery meets the fuel specification for purposes of RCRA regulation.

Used oil that is to be burned for energy recovery and that meets the RCRA fuel specifications of § 279.11 (''on-specification'' used oil) is not regulated under the authority of Part 279 provided that: (1) Certain conditions for used oil fuel marketers are met, and (2) the used oil is not mixed or contaminated with hazardous waste. (Applicable on-specification used oil fuel marketer requirements can be found at §§ 279.72, 279.73, and 279.74(b).) This is the case, notwithstanding that a used oil fuel may contain PCBs. Although the RCRA regulations do not identify the presence of PCBs in used oil as relevant to the determination of whether the used oil is on- or off-specification, the presence of PCBs in used oil is relevant for determining the applicability of the TSCA regulations for the burning of used oil.

TSCA Requirements

The TSCA rules (specifically, 40 CFR 761.20(e)(2)) establish a presumption that detectable quantities of PCBs are present in used oils to be burned for energy recovery. The presumption can be overcome if a marketer determines through testing or other specified procedures that the used oil fuel does not contain quantifiable levels (2 ppm) of PCBs. TSCA rules found at 40 CFR 761.20(a) also prohibit burning for energy recovery of used oil that contains (or contained prior to dilution) PCBs at concentrations of 50 ppm and greater. In addition, §§ 761.1(b)(5) prohibits dilution to attain PCB concentrations either below 50 ppm or below 2 ppm. (However, see decontamination provisions at 40 CFR 761.79(a)(3) and 761.79(b).)

The TSCA regulations establish requirements for the marketing and burning for energy recovery of used oils containing detectable quantities of PCBs at concentrations of 2 ppm or greater, but less than 50 ppm (40 CFR 761.20(e)). Some of these requirements are incorporations by reference of Part 279 requirements for the marketing and burning for energy recovery of off-specification used oil. Therefore, by operation of the TSCA rules, used oil that is on-specification under the RCRA rules may nevertheless be subject to certain requirements specified in the RCRA rules for off-specification used oil.

Specifically, for used oil burners, the TSCA rules reference some of the RCRA off-specification burner requirements of Part 279 Subpart G, including restrictions on burning, notification requirements, tracking requirements, certification requirements and record keeping requirements. (See 40 CFR 761.20(e)(3)–(4)). For used oil marketers, the TSCA rules, with limited exceptions, restrict marketing to qualified incinerators, to marketers who market off-specification used oils, and to off-specification burners as defined in the RCRA Part 279 regulations (See 40 CFR 761.20(e)(1)). The TSCA rules also reference the RCRA regulatory provisions for marketers in Part 279 Subpart H, including record retention, notification, tracking, and certification. The fact that the TSCA rules incorporate by reference these RCRA standards does not by itself mean that PCB-containing used oil is regulated under RCRA authority or that such used oil is off-specification as defined by Part 279.

B. Mixtures of CESQG Waste and Used Oil

Today's rule harmonizes the applicability of 40 CFR Part 261 and Part 279 to mixtures of conditionally exempt small quantity generator (CESQG) waste and used oil that are to be recycled. Specifically, the rule makes clear that mixtures of CESQG waste and used oil that are to be recycled are regulated as used oil under the used oil management standards. Notwithstanding EPA's regulatory intent, the CESQG provision, 40 CFR 261.5(j), that references the applicability of the used oil management standards to mixtures of CESQG waste and used oil that are to be recycled, appears to limit the applicability of the used oil management standards to mixtures that are to be recycled by burning for energy recovery. Section 261.5(j), therefore, incorrectly suggests that mixtures of CESQG wastes and used oil that are to be recycled in a manner other than by burning for energy recovery, such as by re-refining, would not be subject to the used oil management standards. Indeed, because CESQG wastes are not regulated as hazardous wastes, § 261.5(j) would suggest that such mixtures that are re-refined would not be subject to regulation under RCRA Subtitle C or the used oil management standards.

The used oil management standards, however, apply to used oil to be recycled irrespective of what form of recycling is to be employed. By its terms, the presumption in 40 CFR 279.10(a) that used oil is to be recycled (such that used oil is presumptively subject to the used oil management standards, unless it is disposed or sent for disposal), encompasses any type of recycling. The recycling presumption does not, for instance, condition the applicability of the used oil management standards on whether used oil is recycled by burning for energy recovery or by re-refining. Since Part 279 applies to used oil that is to be recycled without regard to how the used oil is to be recycled, Part 279 also applies to mixtures of used oil and CESQG wastes that are to be recycledirrespective of how that mixture is to be recycled.

The apparent limitation contained in § 261.5(j), which would limit the applicability of the used oil management standards to mixtures to be burned for energy recovery, is an artifact of the pre-1992 used oil regulations at 40 CFR Part 266, which only regulated the burning of used oil. When the expanded used oil management standards were promulgated on September 10, 1992, the Agency inadvertently failed to amend § 261.5(j) to reflect the broader scope of the new Part 279. Indeed, the corresponding provision in Part 279 that addresses mixtures of CESQG wastes and used oil to be recycled, § 279.10(b)(3), does not contain the apparent limitation found in § 261.5(j) that would limit the

applicability of the used oil management standards to mixtures to be burned for energy recovery. Therefore, today's rule amends § 261.5(j) as it should have been amended in 1992 to reflect the greater scope of Part 279 and to eliminate any potential ambiguity over the applicability of the used oil management standards to mixtures of CESQG wastes and used oil to be recycled. This amendment does not impose additional regulatory requirements on this category of CESQG waste. These wastes have been and continue to be regulated under 40 CFR 279.10(b)(3).

The Agency received one comment opposing this amendment from a state in response to the May 6, 1998 proposal. The comment stated that mixtures of conditionally exempt small quantity generator (CESQG) waste and used oil should only be regulated as used oil if it is to be recycled by burning for energy recovery. This comment opens up the merits of the original rule (§ 279.10(b)(3)) and that is not the intent of today's final rule. Today's final rule intends only to make certain conforming changes to § 261.5(j) to correctly reflect EPA's original intent in the September 10, 1992 Part 279 used oil management standards rule. EPA addressed the merits of the original rule in that previous rulemaking and EPA is not reopening that issue in this final rule. Even if EPA were to reopen this issue in today's rulemaking and to address the merits of this issue, EPA would come to the same conclusion as it did in the previous rulemaking. EPA is not aware of any reason for distinguishing used oil being burned for energy recovery from used oil being recycled in other ways, and the commenter did not provide any. Notwithstanding this clarification of the federal regulations, the state may regulate mixtures of CESQG waste and used oil more stringently than the federal used oil management program.

C. Clarification of the Recordkeeping Requirements for Marketers of On-Specification Used Oil

Today's rule amends 40 CFR 279.74(b) to clarify that the marketer who first claims that used oil that is to be burned for energy recovery meets the fuel specification (on-specification used oil) must only keep a record of a shipment of used oil to the facility to which the initial marketer delivers the used oil. The preamble to the November 29, 1985 rule (50 FR 49164 at 49189) clearly describes the agency's intent to only track on-specification used oil that is to be burned for energy recovery one step beyond the initial marketer. When these recordkeeping requirements were recodified at 40 CFR 279.74(b) (57 FR 41566, September 10, 1992), the regulations required that a marketer must keep a record of each shipment of used oil to an on-specification used oil burner. However, the marketer who first claims that used oil that is to be burned for energy recovery meets the fuel specification might choose not to market the used oil directly to an on-specification used oil burner (*i.e.* a non-industrial oil burner). Instead, the on-specification used oil might be marketed to a fuel oil distributor for subsequent sale as fuel oil. In this situation, § 279.74(b) could be interpreted to require the initial marketer of the on-specification used oil to keep a record of all subsequent shipments of that used oil until the on-specification used oil reaches a used oil burner. Today's rule clarifies that the initial marketer of on-specification used oil must only keep a record of a shipment of used oil to the facility to which the initial marketer delivers the used oil. The initial marketer need not keep a record of any subsequent transfers of this used oil. For example, the initial marketer would need to keep a record of a shipment of on-specification used oil to a fuel oil distributor, but the initial marketer would not need to keep records of shipments of this used oil from the fuel oil distributor to fuel oil burners or other fuel oil distributors.

The Agency received one comment opposing this amendment from a state in response to the May 6, 1998 proposal. The commenter was concerned that the proposed amendment does not require tracking of used oil that meets the used oil fuel specification to the point to which it is burned for energy recovery, and thus does not provide adequate protection. The Agency disagrees with this comment. This comment opens up the merits of the original November 29, 1985 rule and that is not the intent of today's rule. As with the issue above discussing mixtures of CESQG waste and used oil, the Agency is not reopening the merits of this issue, because the Agency addressed the merits of this issue in the preamble to the November 29, 1985 rule (50 FR 49164 at 49189). Today's amendment does not represent a change in the requirements, but only clarifies the Agency's intent that only the initial marketer of on-specification used oil must keep a record of each shipment of used oil to the facility to which it delivers the used oil. In the September 23, 1991 supplemental notice of proposed rulemaking (56 FR 48000), EPA did not propose to change the tracking requirements or the management requirements, originally promulgated in 1985 for used oil that meets the used oil fuel specification. In drafting the 1992 rule, EPA only intended to recodify the tracking requirements from the now superseded Part 266. It has always been the Agency's position that used oil that is to be burned for energy recovery that meets the used oil fuel specification is a commodity that will be properly handled like any other fuel. The Agency has always intended that used oil that is to be burned for energy recovery only be regulated under the Used Oil Management Standards until it has been determined to meet the used oil fuel specification. Once it has been determined to meet the fuel specification and the marketer complies with 40 CFR 279.72, 279.73, and 279.74(b), the used oil is no longer regulated by the Used Oil Management Standards. If the used oil is not burned for energy recovery and is recycled by other means or disposed, it is regulated as used oil under the Used Oil Management Standards. Even if the Agency were to address the merits of this issue, we would continue to take the position as we are taking in today's amendment, because, for the reasons discussed above, the Agency believes that the tracking requirements would provide adequate protection. The commenter has provided no new information or arguments that would lead us to change this long-standing position. Notwithstanding this clarification of the federal regulations, a state may regulate used oil more stringently than the federal used oil management program.

III. State Authority

Under section 3006 of RCRA, EPA may authorize a qualified State to administer and enforce a hazardous waste program within the State in lieu of the federal program, and to issue and enforce permits in the State. Following authorization, the state requirements authorized by EPA apply in lieu of equivalent Federal requirements and become Federally-enforceable as requirements of RCRA. EPA maintains independent authority to bring enforcement actions under RCRA sections 3007, 3008, 3013, and 7003. Authorized states also have independent authority to bring enforcement actions under state law.

A state may receive authorization by following the approval process described in 40 CFR part 271. Part 271 of 40 CFR also describes the overall standards and requirements for authorization. After a state receives initial authorization, new Federal

regulatory requirements promulgated under the authority in the RCRA statute which existed prior to the 1984 Hazardous and Solid Waste Amendments (HSWA) do not apply in that state until the state adopts and receives authorization for equivalent state requirements. The state must adopt such requirements to maintain authorization. In contrast, under RCRA section 3006(g), (42 U.S.C. 6926(g)), new Federal requirements and prohibitions imposed pursuant to HSWA provisions take effect in authorized states at the same time that they take effect in unauthorized States. Although authorized states still are required to update their hazardous waste programs to remain equivalent to the Federal program, EPA carries out HSWA requirements and prohibitions in authorized states, including the issuance of new permits implementing those requirements, until EPA authorizes the state to do so. Authorized states are required to modify their programs only when EPA promulgates Federal requirements that are more stringent or broader in scope than existing Federal requirements.

RCRA section 3009 allows the states to impose standards more stringent than those in the Federal program. See also 40 CFR 271.1(i). Therefore, authorized states are not required to adopt Federal regulations, either HSWA or non-HSWA, that are considered less stringent.

Today's rule corrects and clarifies the scope of certain regulatory requirements and is, therefore, considered to be no more stringent than the existing federal standards. Authorized States are only required to modify their programs when EPA promulgates federal regulations that are more stringent or broader in scope than the existing federal regulations. Therefore, States that are authorized for the used oil management standards are not required to modify their programs to adopt today's rule. However, EPA strongly urges States to do so.

IV. Statutory and Executive Order Reviews

A. Executive Order 12866: Regulatory Planning and Review

Under Executive Order 12866 (58 FR 51735, October 4, 1993), the Agency must determine whether this regulatory action is ''significant'' and therefore subject to OMB review and the requirements of the Executive Order. The Order defines ''significant'' regulatory action as one that is likely to lead to a rule that may:

(1) Have an annual effect on the economy of $100 million or more, or adversely and materially affect a sector of the economy, productivity, competition, jobs, the environment, public health or safety, or State, local or tribal governments or communities;

(2) Create a serious inconsistency or otherwise interfere with an action taken or planned by another agency;

(3) Materially alter the budgetary impact of entitlements, grants, user fees, or loan programs or the rights and obligations of recipients thereof; or

(4) Raise novel legal or policy issues arising out of legal mandates, the President's priorities, or the principles set forth in the Executive Order.

It has been determined that this rule is not a ''significant regulatory action'' under the terms of Executive Order 12866 and is therefore not subject to OMB review.

B. Paperwork Reduction Act

This action does not impose any new information collection burden since it does not represent any change in requirements, but only clarifies the Agency's intent with respect to certain provisions in the Used Oil Management Standards. However, the Office of Management and Budget (OMB) has previously approved the information collection requirements contained in the existing regulations (40 CFR Part 279) under the provisions of the Paperwork Reduction Act, 44 U.S.C. 3501 *et seq.* and has assigned OMB control number 2050–0124 (EPA ICR No. 1286.06).

Copies of the ICR document(s) may be obtained from Susan Auby, by mail at the Office of Environmental Information, Collection Strategies Division; U.S. Environmental Protection Agency (2822); 1200 Pennsylvania Ave., NW., Washington, DC 20460–0001, by email at *auby.susan@epa.gov*, or by calling (202) 260–4901. A copy may also be downloaded off the internet at *http://www.epa.gov/icr*. Include the ICR and/or OMB number in any correspondence.

Burden means the total time, effort, or financial resources expended by persons to generate, maintain, retain, or disclose or provide information to or for a Federal agency. This includes the time needed to review instructions; develop, acquire, install, and utilize technology and systems for the purposes of collecting, validating, and verifying information, processing and maintaining information, and disclosing and providing information; adjust the existing ways to comply with any previously applicable instructions and requirements; train personnel to be able to respond to a collection of information; search data sources; complete and review the collection of information; and transmit or otherwise disclose the information.

An Agency may not conduct or sponsor, and a person is not required to respond to a collection of information unless it displays a currently valid OMB control number. The OMB control numbers for EPA's regulations are listed in 40 CFR Part 9 and 48 CFR Chapter 15.

C. Regulatory Flexibility Act

The Regulatory Flexibility Act (RFA), as amended by the Small Business Regulatory Enforcement Fairness Act of 1996 (SBREFA), 5 U.S.C. 601 *et seq.* generally requires an agency to prepare a regulatory flexibility analysis of any rule subject to notice and comment rulemaking requirements under the Administrative Procedure Act or any other statute unless the agency certifies that the rule will not have a significant economic impact on a substantial number of small entities. Small entities include small businesses, small organizations, and small governmental jurisdictions.

For purposes of assessing the impacts of today's rule on small entities, small entity is defined as: (1) A small business as defined by the Small Business Administration's regulations at 13 CFR 121.201; (2) a small governmental jurisdiction that is a government of a city, county, town, school district or special district with a population of less than 50,000; and (3) a small organization that is any not-for-profit enterprise which is independently owned and operated and is not dominant in its field.

After considering the economic impacts of today's final rule on small entities, I certify that today's rule will not have a significant economic impact on a substantial number of small entities. Today's rule will not impact any small entity because it does not impose regulatory requirements or otherwise substantively change existing requirements. The rule eliminates drafting errors and ambiguities in the used oil management standards so as to clarify the Agency's intended result. Even if the rule were viewed as a change, the rule would result in lesser regulatory impact than under existing requirements.

D. Unfunded Mandates Reform Act

Title II of the Unfunded Mandates Reform Act of 1995 (UMRA), Public Law 104–4, establishes requirements for Federal agencies to assess the effects of their regulatory actions on State, local, and tribal governments and the private

sector. Under section 202 of the UMRA, EPA generally must prepare a written statement, including a cost-benefit analysis, for proposed and final rules with ''Federal mandates'' that may result in expenditures to State, local, and tribal governments, in the aggregate, or to the private sector, of $100 million or more in any one year. Before promulgating an EPA rule for which a written statement is needed, section 205 of the UMRA generally requires EPA to identify and consider a reasonable number of regulatory alternatives and adopt the least costly, most cost-effective or least burdensome alternative that achieves the objectives of the rule. The provisions of section 205 do not apply when they are inconsistent with applicable law. Moreover, section 205 allows EPA to adopt an alternative other than the least costly, most cost-effective or least burdensome alternative if the Administrator publishes with the final rule an explanation why that alternative was not adopted. Before EPA establishes any regulatory requirements that may significantly or uniquely affect small governments, including tribal governments, it must have developed under section 203 of the UMRA a small government agency plan. The plan must provide for notifying potentially affected small governments, giving them meaningful and timely input in the development of EPA regulatory proposals with significant Federal intergovernmental mandates, and informing, educating, and advising them on compliance with the regulatory requirements.

Today's rule contains no Federal mandates (under the regulatory provisions of Title II of the UMRA) for State, local, or tribal governments or the private sector because it does not impose regulatory requirements or otherwise substantively change existing requirements. Today's rule eliminates drafting errors and ambiguities in the used oil management standards so as to clarify the Agency's intended result. Even if the rule were viewed as a change, the rule would result in lesser regulatory impact than under existing requirements. Thus, today's rule is not subject to the requirements of sections 202 and 205 of the UMRA. Similarly, EPA has determined that this rule contains no regulatory requirements that might significantly or uniquely affect small governments.

E. Executive Order 13132: Federalism

Executive Order 13132, entitled ''Federalism'' (64 FR 43255, August 10, 1999), requires EPA to develop an accountable process to ensure ''meaningful and timely input by State and local officials in the development of regulatory policies that have federalism implications.'' ''Policies that have federalism implications'' is defined in the Executive Order to include regulations that have ''substantial direct effects on the States, on the relationship between the national government and the States, or on the distribution of power and responsibilities among the various levels of government.'' Under Executive Order 13132, EPA may not issue a regulation that has federalism implications, that imposes substantial direct compliance costs, and that is not required by statute, unless the Federal government provides the funds necessary to pay the direct compliance costs incurred by State and local governments, or EPA consults with State and local officials early in the process of developing the proposed regulation. EPA also may not issue a regulation that has federalism implications and that preempts State law unless the Agency consults with State and local officials early in the process of developing the proposed regulation.

If EPA complies by consulting, Executive Order 13132 requires EPA to provide to the Office of Management and Budget (OMB), in a separately identified section of the preamble to the rule, a federalism summary impact statement (FSIS). The FSIS must include a description of the extent of EPA's prior consultation with State and local officials, a summary of the nature of their concerns and the agency's position supporting the need to issue the regulation, and a statement of the extent to which the concerns of State and local officials have been met. Also, when EPA transmits a draft final rule with federalism implications to OMB for review pursuant to Executive Order 12866, EPA must include a certification from the agency's Federalism Official stating that EPA has met the requirements of Executive Order 13132 in a meaningful and timely manner.

This final rule will not have substantial direct effects on the States, on the relationship between the national government and the States, or on the distribution of power and responsibilities among the various levels of government, as specified in Executive Order 13132, because it does not impose regulatory requirements or otherwise substantively change existing requirements. Today's rule eliminates drafting errors and ambiguities in the used oil management standards so as to clarify the Agency's intended result. Even if today's rule were viewed as a change, it would result in lesser regulatory impact than under existing requirements. Thus, the requirements of section 6 of the Executive Order do not apply to this rule.

F. Executive Order 13175: Consultation and Coordination With Indian Tribal Governments

Executive Order 13175, entitled ''Consultation and Coordination with Indian Tribal Governments'' (65 FR 67249, November 9, 2000) requires EPA to develop an accountable process to ensure ''meaningful and timely input by tribal officials in the development of regulatory policies that have tribal implications.'' Today's rule does not have tribal implications, as specified in Executive Order 13175. Specifically, today's rule does not significantly or uniquely affect the communities of Indian tribal governments because it does not impose regulatory requirements or otherwise substantively change existing requirements. Today's rule eliminates drafting errors and ambiguities in the used oil management standards so as to clarify the Agency's intended result. Even if today's rule were viewed as a change, it would result in lesser regulatory impact than current requirements. Thus, Executive Order 13175 does not apply to this rule.

G. Executive Order 13045: Children's Health

''Protection of Children from Environmental Health Risks and Safety Risks'' (62 FR 19885, April 23, 1997) applies to any rule that: (1) Is determined to be ''economically significant'' as defined under Executive Order 12866, and (2) concerns an environmental health or safety risk that EPA has reason to believe may have a disproportionate effect on children. If the regulatory action meets both criteria, the Agency must evaluate the environmental health or safety effects of the planned rule on children, and explain why the planned regulation is preferable to other potentially effective and reasonably feasible alternatives considered by the Agency.

This rule is not subject to Executive Order 13045 because it is not an economically significant rule as defined by Executive Order 12866, and because it does not involve decisions based on environmental health or safety risks.

H. Executive Order 13211: Energy Effects

This rule is not subject to Executive Order 13211, ''Actions Concerning Regulations That Significantly Affect Energy Supply, Distribution, or Use'' (66 FR 28355 (May 22, 2001)) because it is not a significant regulatory action under Executive Order 12866.

I. National Technology Transfer and Advancement Act of 1995

Section 12(d) of the National Technology Transfer and Advancement Act of 1995 (''NTTAA''), Public Law No. 104–113, section 12(d) (15 U.S.C. 272 note) directs EPA to use voluntary consensus standards in its regulatory activities unless to do so would be inconsistent with applicable law or otherwise impractical. Voluntary consensus standards are technical standards (*e.g.*, materials specifications, test methods, sampling procedures, and business practices) that are developed or adopted by voluntary consensus standards bodies. The NTTAA directs EPA to provide Congress, through OMB, explanations when the Agency decides not to use available and applicable voluntary consensus standards.

This proposed rulemaking does not involve technical standards. Therefore, EPA is not considering the use of any voluntary consensus standards.

J. Congressional Review Act

The Congressional Review Act, 5 U.S.C. 801 *et seq.*, as added by the Small Business Regulatory Enforcement Fairness Act of 1996, generally provides that before a rule may take effect, the agency promulgating the rule must submit a rule report, which includes a copy of the rule, to each House of the Congress and to the Comptroller General of the United States. EPA will submit a report containing this rule and other required information to the U.S. Senate, the U.S. House of Representatives, and the Comptroller General of the United States prior to publication of the rule in the **Federal Register**. A Major rule cannot take effect until 60 days after it is published in the **Federal Register**. This action is not a ''major rule'' as defined by 5 U.S.C. 804(2). This rule will be effective September 29, 2003.

V. Effective Date

Because the regulated community does not need 6 months to come into compliance with this rule, EPA finds, pursuant to RCRA section 3010(b)(1), that this rule can be made effective in less than six months.

List of Subjects

40 CFR Part 261

Environmental protection, Hazardous waste, Recycling, Reporting and recordkeeping requirements.

40 CFR Part 279

Conditionally exempt small quantity generator (CESQG), Environmental protection, Hazardous waste, Polychlorinated biphenyls (PCBs), Solid waste, Recycling, Response to releases, Used oil, Used oil specification.

Dated: July 23, 2003.

Marianne L. Horinko,

Acting Administrator.

■ For the reasons set out in the preamble, chapter I of title 40 of the Code of Federal Regulations is amended as follows:

PART 261—IDENTIFICATION AND LISTING OF HAZARDOUS WASTE

■ 1. The authority citation for part 261 continues to read as follows:

Authority: 42 U.S.C. 6905, 6912(a), 6921, 6922, 6924(y) and 6938.

§ 261.5 [Amended]

■ 2. Section 261.5(j) is amended by removing both phrases, ''if it is destined to be burned for energy recovery.''

PART 279—STANDARDS FOR THE MANAGEMENT OF USED OIL

■ 1. The authority citation for part 279 continues to read as follows:

Authority: Sections 1006, 2002(a), 3001 through 3007, 3010, 3014, and 7004 of the Solid Waste Disposal Act, as amended (42 U.S.C. 6905, 6912(a), 6921 through 6927, 6930, 6934, and 6974); and Sections 101(37) and 114(c) of CERCLA (42 U.S.C. 9601(37) and 9614(c)).

■ 2. Section 279.10 is amended by revising paragraph (i) to read as follows:

§ 279.10 Applicability.

* * * * *

(i) *Used oil containing PCBs.* Used oil containing PCBs (as defined at 40 CFR 761.3) at any concentration less than 50 ppm is subject to the requirements of this Part unless, because of dilution, it is regulated under 40 CFR Part 761 as a used oil containing PCBs at 50 ppm or greater. PCB-containing used oil subject to the requirements of this Part may also be subject to the prohibitions and requirements found at 40 CFR Part 761, including § 761.20(d) and (e). Used oil containing PCBs at concentrations of 50 ppm or greater is not subject to the requirements of this Part, but is subject to regulation under 40 CFR Part 761. No person may avoid these provisions by diluting used oil containing PCBs, unless otherwise specifically provided for in this Part or Part 761 of this chapter.

■ 3. Section 279.74 is amended by revising paragraph (b) to read as follows:

§ 279.74 Tracking.

* * * * *

(b) *On-specification used oil delivery.* A generator, transporter, processor/re-refiner, or burner who first claims that used oil that is to be burned for energy recovery meets the fuel specifications under § 279.11 must keep a record of each shipment of used oil to the facility to which it delivers the used oil. Records for each shipment must include the following information:

(1) The name and address of the facility receiving the shipment;

(2) The quantity of used oil fuel delivered;

(3) The date of shipment or delivery; and

(4) A cross-reference to the record of used oil analysis or other information used to make the determination that the oil meets the specification as required under § 279.72(a).

* * * * *

[FR Doc. 03–19275 Filed 7–29–03; 8:45 am]

BILLING CODE 6560–50–P

DEPARTMENT OF COMMERCE

National Oceanic and Atmospheric Administration

50 CFR Part 679

[Docket No. 021122286–3036–02; I.D. 072303B]

Fisheries of the Exclusive Economic Zone Off Alaska; Sablefish by Vessels Using Trawl Gear in the Central Regulatory Area of the Gulf of Alaska

AGENCY: National Marine Fisheries Service (NMFS), NationalOceanic and Atmospheric Administration (NOAA), Commerce.

ACTION: Closure.

SUMMARY: NMFS is prohibiting retention of sablefish by vessels using trawl gear in the Central Regulatory Area of the Gulf of Alaska (GOA). NMFS is requiring that catch of sablefish by vessels using trawl gear in this area be treated in the same manner as prohibited species and discarded at sea with a minimum of injury. This action is necessary because the allocation of the sablefish 2003 total allowable catch (TAC) assigned to trawl gear in this area has been reached.

DATES: Effective 1200 hrs, Alaska local time (A.l.t.), July 26, 2003, until 2400 hrs, A.l.t., December 31, 2003.

FOR FURTHER INFORMATION CONTACT: Josh Keaton, 907–586–7228.

SUPPLEMENTARY INFORMATION: NMFS manages the groundfish fishery in the GOA exclusive economic zone according to the Fishery Management Plan for the Groundfish Fishery of the Gulf of Alaska (FMP) prepared by the North Pacific Fishery Management Council under authority of the

Magnuson-Stevens Fishery Conservation and Management Act. Regulations governing fishing by U.S. vessels in accordance with the FMP appear at subpart H of 50 CFR part 600 and 50 CFR part 679.

The 2003 TAC of sablefish for vessels using trawl gear in the Central Regulatory Area of the GOA was established as 1,288 metric tons (mt) by the final 2003 harvest specifications for groundfish in the GOA (68 FR 9924, March 3, 2003).

In accordance with § 679.20(d)(2), the Administrator, Alaska Region, NMFS, has determined that the allocation of the sablefish TAC assigned to trawl gear in the Central Regulatory Area of the GOA has been reached. Therefore, NMFS is requiring that further catches of sablefish by vessels using trawl gear in the Central Regulatory Area of the GOA be treated as prohibited species in accordance with § 679.21(b).

Classification

This action responds to the best available information recently obtained from the fishery. The Assistant Administrator for Fisheries, NOAA (AA), finds good cause to waive the requirement to provide prior notice and opportunity for public comment pursuant to the authority set forth at 5 U.S.C. 553(b)(B) as such requirement is contrary to the public interest. This requirement is contrary to the public interest as it would delay the prohibition of retention, lead to exceeding the 2003 TAC of sablefish assigned to vessels using trawl gear in the Central Regulatory Area of the GOA, and therefore reduce the public's ability to use and enjoy the fishery resource.

The AA also finds good cause to waive the 30–day delay in the effective date of this action under 5 U.S.C. 553(d)(3). This finding is based upon the reasons provided above for waiver of prior notice and opportunity for public comment.

This action is required by § 679.20 and is exempt from review under Executive Order 12866.

Authority: 16 U.S.C. 1801 *et seq.*

Dated: July 23, 2003.

Bruce C. Morehead,

Acting Director, Office of Sustainable Fisheries, National Marine Fisheries Service.

[FR Doc. 03–19360 Filed 7–25–03; 2:05 pm]

BILLING CODE 3510–22–S

DEPARTMENT OF COMMERCE

National Oceanic and Atmospheric Administration

50 CFR Part 679

[Docket No. 030416087–3176–02; I.D. 032603C]

RIN 0648–AQ75

Fisheries of the Exclusive Economic Zone Off Alaska; Amendment of Eligibility Criteria for the Bering Sea and Aleutian Islands Management Area Pacific Cod Hook-and-Line and Pot Gear Fisheries

AGENCY: National Marine Fisheries Service (NMFS), National Oceanic and Atmospheric Administration (NOAA), Commerce.

ACTION: Final rule.

SUMMARY: NMFS issues a final rule to amend eligibility criteria for Pacific cod endorsements to groundfish licenses issued under the License Limitation Program (LLP). These endorsements are necessary to participate in the Bering Sea and Aleutian Islands Management Area (BSAI) Pacific cod hook-and-line or pot gear fisheries with vessels greater than or equal to 60 feet (18.3 m) length overall (LOA). This action is necessary to allow additional participation in the BSAI Pacific cod hook-and-line or pot gear fisheries, as intended by the North Pacific Fishery Management Council (Council). The intended effect of this action is to prevent unnecessary restriction on participation in the BSAI Pacific cod hook-and-line or pot gear fisheries and to conserve and manage the Pacific cod resources in the BSAI in accordance with the Magnuson-Stevens Fishery Conservation and Management Act (Magnuson-Stevens Act).

DATES: Effective on August 29, 2003.

ADDRESSES: Copies of the Regulatory Impact Review/Initial Regulatory Flexibility Analysis (RIR/IRFA) and the Final Regulatory Flexibility Analysis (FRFA) prepared for this action are available from NMFS, Alaska Region, P.O. Box 21668, Juneau, AK 99802, Attn: Lori Durall, telephone 907–586–7247. Copies of the Environmental Assessment (EA)/RIR/IRFA prepared for Amendment 67 and the 2002 Stock Assessment and Fishery Evaluation (SAFE) Report are available from the North Pacific Fishery Management Council, 605 W. 4th Avenue, Suite 306, Anchorage, AK 99501; telephone 907–271–2809.

FOR FURTHER INFORMATION CONTACT: Melanie Brown, 907–586–7228, or email at *melanie.brown@noaa.gov*.

SUPPLEMENTARY INFORMATION: NMFS manages the groundfish fisheries in the exclusive economic zone of the BSAI under the Fishery Management Plan for the Groundfish Fishery of the Bering Sea and Aleutian Islands Management Area (FMP). The Council prepared the FMP under the authority of the Magnuson-Stevens Act. Regulations governing U.S. fisheries and implementing this FMP appear at 50 CFR parts 600 and 679.

Background

The background regarding this action is detailed in the preamble to the proposed rule published April 25, 2003 (68 FR 20360). Public comments on the proposed rule were invited through May 27, 2003. Background regarding the LLP may be found in the final rule implementing the LLP (63 FR 52642, October 1, 1998).

This action amends the regulatory language at § 679.4(k)(9)(iii)(F) to specify that a person who owns the qualifying harvest history of Pacific cod from a vessel, but who also owned a LLP-qualifying groundfish fishing history from a different vessel at the time the qualifying Pacific cod threshold harvests were made, is eligible for the Pacific cod endorsement on the person's LLP groundfish license. To prevent an increase in the number of LLP groundfish licenses, the regulations also are amended to restrict the LLP qualifying history and the Pacific cod qualifying history of any one vessel to no more than one LLP groundfish license endorsed for Pacific cod hook-and-line and/or pot gear fisheries. This amendment limits the number of vessels allowed to participate in the Pacific cod hook-and-line and/or pot gear fisheries, as intended by the Council in developing the LLP.

Comments

The only comment received on the proposed rule is summarized here.

Comment : The author of the comment supports the intent to allow additional participation in the BSAI Pacific cod hook-and-line and pot fisheries, but is concerned that part of the new regulatory amendment would be overly restrictive. The author states that the regulatory amendment would alter the effects of the existing exemptions for eligibility for a Pacific cod endorsement, including the hardship provisions. The language at § 679.4(k)(9)(iii)(F)(*3*) may be inconsistent with some circumstances of the hardship provision. The author stated that the hardship provisions allow Pacific cod harvested from a single vessel to be used to meet the

eligibility criteria for a Pacific cod endorsement on more than one LLP license and that language at § 679.4(k)(9)(iii)(F)(3) may not allow for this application of the hardship provisions.

Response: NMFS has determined that the proposed regulatory language has no effect on the current exemptions for Pacific cod endorsement eligibility or on the ''hardship'' (unavoidable circumstance) provisions. The current regulation at § 679.4(k)(9)(v)(A) authorizes, in limited instances, the combination of qualifying harvests from a sunken vessel with harvests from a replacement vessel to satisfy the endorsement requirements. This final rule does not change that section. Section 679.4(k)(9)(v)(B), in very limited situations, allows the agency to make conjectures regarding qualifying harvests, for circumstances beyond the applicant's control, if an applicant can demonstrate on the record that qualifying harvests would have been made. This ''hardship'' provision is not affected by this final rule. This final rule simply clarifies, consistent with Council intent, that the fishing activities of one vessel may not give rise to Pacific cod endorsements on more than one LLP license.

Changes From the Proposed Rule

Section 679.4(k)(9)(iii)(F)(*2*) was changed in the final rule from the proposed rule to improve the clarity of the text. The phrase ''by that vessel'' was considered redundant and is removed. To clarify the type of endorsement-qualifying harvest history, the words ''Pacific cod'' were inserted before the text ''endorsement-qualifying harvest.'' These changes provide clarity and are not substantial.

Classification

NMFS prepared a FRFA to evaluate the impact of this action on small entities, in accordance with the provisions of the Regulatory Flexibility Act of 1980, as modified by the Small Business Regulatory Enforcement Fairness Act of 1996 (5 U.S.C. 604(a)). The intentions of this action were explained in the preamble to the proposed rule (68 FR 20360, April 25, 2003).

An IRFA was prepared for the proposed rule and was described in the Classification section of the preamble to the proposed rule. The public comment period ended on May 27, 2003. No comments were received on the economic impacts of the proposed rule.

The entities regulated by this action are those that did not qualify for a Pacific cod endorsement under a final rule published on April 15, 2002 (67 FR 18129), and would qualify under the approach as proposed by the Council in October 2002. According to an analysis prepared to support the Council's October 2002 deliberations, six entities appear to be affected by this action. Two of these are freezer longliners (hook-and-line catcher-processor vessels); one is a pot catcher processor vessel and three are pot catcher vessels. The economic appendix to the 2002 SAFE Report (see **ADDRESSES**) indicates that 31 hook-and-line catcher processor vessels active in the BSAI harvesting of Pacific cod were worth less than $3.5 million each in 2001, while 14 harvesting of Pacific cod were worth more than $3.5 million each. All BSAI pot catcher processor vessels and pot catcher vessels are small entities. Thus, about two-thirds of the vessels in this class in the BSAI are small entities. All six entities were treated as small entities for the purpose of this analysis.

This regulation does not impose new recordkeeping or reporting requirements on the regulated small entities.

This action has no adverse economic impacts on these entities. Each of these six small entities would be allowed to claim additional annual harvests to qualify for the BSAI Pacific cod endorsements to the LLP.

A status quo alternative to the action was considered but not adopted. It does not achieve the stated objective of the Council for this action or reduce the potential adverse economic burden on the small entities identified as subject to direct regulation by this action.

This final rule has been determined to be not significant for purposes of Executive Order 12866.

List of Subjects in 50 CFR Part 679

Alaska, Fisheries, Reporting and recordkeeping requirements.

Dated: July 24, 2003.

Rebecca Lent,

Deputy Assistant Administrator for Regulatory Programs, National Marine Fisheries Service.

■ For reasons set out in the preamble, 50 CFR part 679 is amended to read as follows:

PART 679—FISHERIES OF THE EXCLUSIVE ECONOMIC ZONE OFF ALASKA

■ 1. The authority citation for part 679 continues to read as follows:

Authority: 16 U.S.C. 773 *et seq.*; 1801 *et seq.*; 3631 *et seq.*; Title II of Division C, Pub. L. 105–277; Sec. 3027, Pub. L. 106–31; 113 Stat. 57; 16 U.S.C. 1540(f); and Sec. 209, Pub. L. 106–554.

■ 2. In § 679.4, paragraph (k)(9)(iii)(F) is revised to read as follows:

§ 679.4 Permits.

* * * * *

(k) * * *

(9) * * *

(iii) * * *

(F) Harvests within the BSAI Would count toward eligibility amounts in the table at paragraph (k)(9)(ii) of this section if:

(*1*) Those harvests were made from the vessel that was used as the basis of eligibility for the license holder's LLP groundfish license, or

(*2*) Those harvests were made from a vessel that was not the vessel used as the basis of eligibility for the license holder's LLP groundfish license, provided that, at the time the endorsement-qualifying Pacific cod harvests were made, the person who owned such Pacific cod endorsement-qualifying fishing history also owned the fishing history of a vessel that satisfied the requirements for the LLP groundfish license.

(*3*) Notwithstanding the provisions of paragraph (k)(9)(iii)(F)(*2*) of this section, the LLP groundfish license qualifying history or the Pacific cod qualifying history of any one vessel may not be used to satisfy the requirements for issuance of more than one LLP groundfish license endorsed for the BSAI Pacific cod hook-and-line or pot gear fisheries.

* * * * *

[FR Doc. 03–19425 Filed 7–29–03; 8:45 am]

BILLING CODE 3510–22–S

Proposed Rules

Federal Register
Vol. 68, No. 146
Wednesday, July 30, 2003

This section of the FEDERAL REGISTER contains notices to the public of the proposed issuance of rules and regulations. The purpose of these notices is to give interested persons an opportunity to participate in the rule making prior to the adoption of the final rules.

DEPARTMENT OF AGRICULTURE

Federal Crop Insurance Corporation

7 CFR Part 457

RIN 0563–AB76

Common Crop Insurance Regulations; Blueberry Crop Insurance Provisions

AGENCY: Federal Crop Insurance Corporation, USDA.

ACTION: Proposed rule with request for comments.

SUMMARY: The Federal Crop Insurance Corporation (FCIC) proposes to add to 7 CFR part 457 a new § 457.166 that provides for the insurance of Blueberries. The provisions will be used in conjunction with the Common Crop Insurance Policy Basic Provisions (Basic Provisions), which contain standard terms and conditions common to most crops. The intended effect of this action is to convert the blueberry pilot crop insurance program to a permanent insurance program administered by FCIC for the 2005 and succeeding crop years. In this rule the Risk Management Agency (RMA) particularly calls attention to, and solicits comments on the provisions contained in section 5, Cancellation and Termination Dates, and Section 7, Insurance Period, that were modified to accommodate year-round insurance coverage for blueberries.

DATES: Written comments and opinions on this proposed rule will be accepted until close of business September 29, 2003 and will be considered when the rule is to be made final. The comment period for information collections under the Paperwork Reduction Act of 1995 continues through September 29, 2003.

ADDRESSES: Interested persons are invited to submit written comments to the Director, Product Development Division, Federal Crop Insurance Corporation, United States Department of Agriculture, 6501 Beacon Drive, Stop 0812, Room 421, Kansas City, MO 64133. Comments titled ''Blueberry Crop Insurance Provisions'' may be sent via the Internet to ''*directorpdd@rm.fcic.usda.gov*.'' A copy of each response will be available for public inspection and copying from 7 a.m. to 4:30 p.m., CST Monday through Friday, except holidays, at the above address.

FOR FURTHER INFORMATION CONTACT: William Klein, Risk Management Specialist, Research and Development, Product Development Division, Federal Crop Insurance Corporation, at the Kansas City, MO address listed above, telephone (816) 926–7730.

SUPPLEMENTARY INFORMATION:

Executive Order 12866

This rule has been determined to be Not-Significant for the purpose of Executive Order 12866 and, therefore, has not been reviewed by the Office of Management and Budget (OMB).

Paperwork Reduction Act of 1995

Under the provisions of the Paperwork Reduction Act of 1995 (44 U.S.C. chapter 35), the collections of information for this rule have been previously approved by OMB under control number 0563–0053 through February 28, 2005.

Unfunded Mandates Reform Act of 1995

Title II of the Unfunded Mandates Reform Act of 1995 (UMRA), establishes requirements for Federal agencies to assess the effects of their regulatory actions on State, local, and tribal governments and the private sector. This rule contains no Federal mandates (under the regulatory provisions of title II of the UMRA) for State, local, and tribal governments or the private sector. Therefore, this rule is not subject to the requirements of sections 202 and 205 of the UMRA.

Executive Order 13132

The provisions contained in this rule will not have a substantial direct effect on States, the relationship between the national government and the States, or on the distribution of power and responsibilities among the various levels of government. Therefore, no consultation with States is required.

Regulatory Flexibility Act

This regulation will not have a significant economic impact on a substantial number of small entities. The availability of insurance for the current population of blueberry entities is limited to selected counties in nine pilot states that have significant blueberry production. New provisions included in this rule will not impact small entities to a greater extent than large entities. Under the Basic Provisions, every producer is required to complete an application and acreage report. If the crop is damaged or destroyed, the insured is required to give notice of loss and provide the necessary information to complete a claim for indemnity. This proposed rule does not alter those requirements. The amount of work required of insurance companies delivering and servicing these policies will not increase significantly from the amount of work currently required. Therefore, this action is determined to be exempt from the provisions of the Regulatory Flexibility Act (5 U.S.C. 605), and no Regulatory Flexibility Analysis was prepared.

Federal Assistance Program

This program is listed in the Catalog of Federal Domestic Assistance under No. 10.450.

Executive Order 12372

This program is not subject to the provisions of Executive Order 12372, which requires intergovernmental consultation with State and local officials. See the Notice related to 7 CFR part 3015, subpart V, published at 48 FR 29115, June 24, 1983.

Executive Order 12988

This proposed rule has been reviewed in accordance with Executive Order 12988 on civil justice reform. The provisions of this rule will not have a retroactive effect. The provisions of this rule will preempt State and local laws to the extent such State and local laws are inconsistent herewith. The administrative appeal provisions published at 7 CFR part 11 must be exhausted before any action for judicial review may be brought.

Environmental Evaluation

This action is not expected to have a significant economic impact on the quality of the human environment, health, and safety. Therefore, neither an Environmental Assessment nor an

Environmental Impact Statement is needed.

Background

FCIC offered a pilot crop insurance program for blueberries beginning with the 1995 crop year in selected counties in Michigan, Mississippi, New Jersey, and North Carolina. In 1997 the pilot program was expanded to include two counties with lowbush blueberries in Maine, and in 1999 it was expanded to include five additional North Carolina counties. It was expanded to selected counties in Alabama, Florida, Georgia, and South Carolina for the 2000 crop year. For the 2002 crop year, blueberry crop insurance is available in selected counties in Alabama, Florida, Georgia, Maine, Michigan, Mississippi, New Jersey, North Carolina, and South Carolina.

The pilot program has provided a valuable risk management tool and has favorable insurance experience since the pilot program was initiated. The combined loss ratio from 1995 through the 2001 crop year has been approximately .40. The highest loss ratio for the pilot program was in 1996, at .77. Loss ratios for the other years of the pilot program were significantly lower, at .64 and below. The major causes of loss (accounting for approximately 76 percent of indemnities paid) from 1995 through 2001 were hail, freeze, frost, drought, and insufficient chilling hours.

FCIC has decided to convert the blueberry pilot program a permanent crop insurance program beginning with the 2005 crop year. To effectuate this conversion, FCIC proposes to add to the Common Crop Insurance Regulations (7 CFR part 457), a new section, 7 CFR 457.166, Blueberry Crop Insurance Provisions effective for the 2005 and succeeding crop years. The blueberry pilot program is an actual production history (APH) insurance plan of multiple peril crop insurance. Insurance is provided against the standard causes of loss such as adverse weather, fire, etc., insufficient chilling hours to effectively break dormancy, and loss of quality. Unit division is limited to basic units, unless otherwise specified in the Special Provisions of Insurance. The Special Provisions allow optional units by type for the rabbiteye and highbush types in Alabama, Florida, Georgia, North Carolina, and South Carolina.

The overall participation rate has been approximately 56 percent. The number of policies earning premiums increased 77 percent from 1995 to 2001. Under the blueberry pilot crop insurance program, 2,291 policies and approximately 151,000 acres were insured for the 1995 through 2001 crop years.

During the pilot program, modifications were made to improve the loss adjustment procedures. Policy language was also added to accommodate insuring lowbush blueberry varieties, after the first two Maine counties with lowbush blueberries were added to the pilot program in 1997.

As a result of the pilot program experience and program reviews, several changes have been made to the pilot program and are incorporated in this proposed rule. The most significant changes are as follows: (1) Modified provisions to increase the number of days for insurance to attach from 10 to 20 days to allow time for companies to complete inspections; (2) added provisions to eliminate any lapse in insurance coverage between crop years to ensure that all insurable perils are covered; (3) added provisions to specify that if the insured policy is canceled or terminated for any crop year after insurance attached for that crop year, but on or before the cancellation and termination dates, whichever is later, then insurance will not be considered to have attached for that year and no premium, administrative fee, or indemnity will be due; (4) added provisions to clarify that an insurance provider may not cancel an insured's policy when an insured cause of loss has occurred after insurance attached, but prior to the cancellation and termination date; (5) added a provision that notifies the insured that they may be required to harvest a sample that the insurance provider selects for appraisal purposes to simplify the loss adjustment process; (6) added quality adjustment provisions for determining production to count for mature blueberries, harvested or unharvested, that have been damaged to the extent the blueberries cannot be sold for fresh or processing (If damaged blueberry production is sold, the production to count is determined by dividing the price received for the damaged blueberries by the applicable price election and multiplying that factor by the production sold); (7) added provisions to reduce the indemnity for affected acreage in a unit by the percentage of premium reduction specified in the Special Provisions for frost protection equipment if the insurance provider determines that the frost protection equipment was not properly utilized or not correctly reported.

The proposed provisions will be effective for the 2005 and succeeding crop years. These provisions will replace and supersede the current unpublished provisions that insure blueberries under pilot program status.

List of Subjects in 7 CFR Part 457

Crop insurance, Blueberry, Reporting and recordkeeping requirements.

Proposed Rule

Accordingly, as set forth in the preamble, the Federal Crop Insurance Corporation proposes to amend 7 CFR part 457 as follows:

PART 457—COMMON CROP INSURANCE REGULATIONS

1. The authority citation for 7 CFR part 457 continues to read as follows:

Authority: 7 U.S.C. 1506(l), 1506(p).

2. Section 457.166 is added to read as follows:

§ 457.166 Blueberry crop insurance provisions.

The Blueberry Crop Insurance Provisions for the 2005 and succeeding crop years are as follows:

FCIC policies:

UNITED STATES DEPARTMENT OF AGRICULTURE

Federal Crop Insurance Corporation

Reinsured policies:

(Appropriate title for insurance provider)

Both FCIC and reinsured policies:

Blueberry crop insurance provisions

If a conflict exists among the policy provisions, the order of priority is as follows: (1) the Catastrophic Risk Protection Endorsement, if applicable; (2) the Special Provisions; (3) these Crop Provisions; and (4) the Basic Provisions with (1) controlling (2), etc.

1. Definitions

Blueberry production—All mature harvested and appraised blueberries, excluding plant material and unsound blueberries eliminated during the inspection process by either wash or dry-line methods or field appraised in an equivalent manner, usually referred to as first net weight.

Direct marketing—Sale of the insured crop directly to consumers without the intervention of an intermediary such as a wholesaler, retailer, packer, processor, shipper or buyer. Examples of direct marketing include selling through an on-farm or roadside stand, farmer's market, or permitting the general public to enter the field for the purpose of picking the crop.

Dry-line—A process by which the blueberries are run across a ''sorting

belt'' to allow for plant material to be blown off, the blueberries to be sized, and unsound blueberries to be removed mechanically by the belt or by hand.

Harvest—Picking mature blueberries from the bushes either by hand or machine.

Mechanical damage—Damage to the blueberries caused by machinery or tools.

Pound—Sixteen ounces avoirdupois.

Production guarantee (per acre)—The number of pounds determined by multiplying the approved yield per acre by the coverage level percentage you elect.

Prune—A cultural practice performed to increase blueberry production as follows:

(a) For lowbush blueberries, a process by which the acreage is either burned or mowed; and

(b) For all other blueberries, a process by which parts of the bush are cut off or the bush is cut back.

Unsound blueberries—Blueberry fruit that is not considered as blueberry production because it is undersized, immature, soft, overripe, damaged by insects, wildlife, disease, or mechanically damaged to the extent that the fruit is not marketable.

2. Unit Division

Notwithstanding section 34 of the Basic Provisions, blueberry acreage is limited to basic units as defined in section 1 of the Basic Provisions, unless otherwise specified in the Special Provisions.

3. Insurance Guarantees, Coverage Levels, and Prices for Determining Indemnities

In addition to the requirements of section 3 of the Basic Provisions:

(a) You may select only one price election for each blueberry type designated in the Special Provisions. The price elections you choose for each type must have the same percentage relationship to the maximum price offered by us for each type. For example, if you choose 100 percent of the maximum price election for one type, you must also choose 100 percent of the maximum price election for all other types.

(b) You must report (by type if applicable) by the production reporting date designated in section 3 of the Basic Provisions:

(1) For all types of blueberries: any damage; removal of bushes; change in practices, or any other circumstance that may reduce the expected yield below the yield upon which the insurance guarantee is based, and the number of affected acres; and

(2) For highbush and rabbiteye blueberry types:

(i) The number of bearing bushes on insurable and uninsurable acreage; and

(ii) The age of the bushes and the planting pattern.

(c) We will reduce the yield used to establish your production guarantee as necessary, based on our estimate of the effect of the following: removal of bushes; damage to bushes; changes in practices; and any other circumstance that may affect the yield potential of the insured crop. If you fail to notify us of any circumstance that may reduce your yields from previous levels, we will reduce your production guarantee as necessary at any time we become aware of the circumstance.

(d) You may not increase your elected or assigned coverage level or the ratio of your price election to the maximum price election we offer for the next year if a cause of loss that could or would reduce the yield of the insured crop is evident prior to the time you request the increase.

4. Contract Changes

In accordance with section 4 of the Basic Provisions, the contract change date is August 31 preceding the cancellation date.

5. Cancellation and Termination Dates

(a) In accordance with section 2 of the Basic Provisions, the cancellation and termination dates are November 20.

(b) If your blueberry policy is canceled or terminated by us for any crop year, in accordance with the terms of the policy, after insurance attached for that crop year, but on or before the cancellation and termination dates, whichever is later, insurance will not be considered to have attached for that crop year and no premium, administrative fee, or indemnity will be due for such crop year.

(c) We may not cancel your policy when an insured cause of loss has occurred after insurance attached, but prior to the cancellation date. However your policy can be terminated if a cause for termination contained in sections 2 or 27 of the Basic Provisions exists.

6. Insured Crop

(a) In accordance with section 8 of the Basic Provisions, the crop insured will be all the blueberries in the county for which a premium rate is provided in the actuarial documents:

(1) In which you have a share;

(2) That are grown on bush varieties that:

(i) Were commercially available when the bushes were set out; and

(ii) Are varieties adapted to the area of the following types:

(A) Highbush blueberries;

(B) Lowbush blueberries;

(C) Rabbiteye blueberries; or

(D) Other blueberry types listed on the Special Provisions.

(3) Are produced on bushes that have reached the minimum insurable age or have produced the minimum yield per acre designated in the Special Provisions; and

(4) If inspected, are considered acceptable by us.

(b) Lowbush blueberry plants must be pruned every other year to be eligible for insurance.

7. Insurance Period

(a) In accordance with the provisions of section 11 of the Basic Provisions:

(1) For the year of application, coverage begins on November 21 of the calendar year prior to the year the insured crop normally blooms, except that, if your application is received by us after November 1, insurance will attach on the twentieth day after your properly completed application is received in our local office, unless we inspect the acreage during the 20 day period and determine that it does not meet insurability requirements. You must provide any information that we require for the crop or to determine the condition of the blueberry acreage.

(2) For each crop year subsequent to the year of application, that the policy remains continuously in force, coverage begins on the day immediately following the end of the insurance period for the prior crop year. Policy cancellation that results solely from transferring an existing policy to a different insurance provider for a subsequent crop year will not be considered a break in continuous coverage.

(3) The calendar date for the end of insurance period for each crop year is, September 30 for Michigan and September 15 for all other states.

(4) Cancellation and termination provisions that pertain to the period after insurance has attached, but prior to the cancellation and termination date, are contained in section 5 of these crop provisions.

(b) In addition to the provisions of section 11 of the Basic Provisions:

(1) If you acquire an insurable share in any insurable acreage after coverage begins but on or before the acreage reporting date for the crop year, and after an inspection we consider the acreage acceptable, insurance will be considered to have attached to such acreage on the calendar date for the beginning of the insurance period. There will be no coverage of any

insurable interest acquired after the acreage reporting date.

(2) If you relinquish your insurable share on any insurable acreage of blueberries on or before the acreage reporting date for the crop year, and the acreage was insured by you the previous crop year, insurance will not be considered to have attached to, and no premium or indemnity will be due for such acreage for that crop year unless:

(i) A transfer of coverage and right to an indemnity, or a similar form approved by us, is completed by all affected parties;

(ii) We are notified by you or the transferee in writing of such transfer on or before the acreage reporting date; and

(iii) The transferee is eligible for crop insurance.

8. Causes of Loss

(a) In accordance with the provisions of section 12 of the Basic Provisions, insurance is provided only against the following causes of loss that occur during the insurance period:

(1) Adverse weather conditions;

(2) Fire, unless weeds and other forms of undergrowth have not been controlled or pruning debris has not been removed from the unit;

(3) Insects, but not damage due to insufficient or improper application of pest control measures;

(4) Plant disease, but not damage due to insufficient or improper application of disease control measures;

(5) Earthquake;

(6) Volcanic eruption;

(7) An insufficient number of chilling hours to effectively break dormancy;

(8) Wildlife, unless appropriate control measures have not been taken; and

(9) Failure of the irrigation water supply, if caused by a cause of loss specified in this section that occurs during the insurance period.

(b) In addition to the causes of loss excluded in section 12 of the Basic Provisions, we will not insure against damage or loss of production due to:

(1) Failure to install and maintain a proper drainage system;

(2) Failure to harvest in a timely manner;

(3) Inability to market the blueberries for any reason other than actual physical damage to the blueberries from an insurable cause specified in this section (For example, we will not pay you an indemnity if you are unable to market due to quarantine, boycott, or refusal of any person to accept production); or

(4) Mechanical damage in excess of that normally experienced for mechanically harvested blueberries for the current crop year.

9. Duties in the Event of Damage or Loss

In addition to the requirements of section 14 of the Basic Provisions, the following will apply:

(a) You must notify us:

(1) Within 3 days of the date harvest should have started if the crop will not be harvested.

(2) Within 24 hours if any cause of loss occurs within 15 days of harvest, or when the blueberries are mature and ready for harvest or during harvest, so we can inspect the insured acreage.

(3) Within 24 hours if any cause of loss occurs during harvest, and you do not intend to complete harvesting of the crop, so that we can inspect the acreage.

(4) At least 15 days before any production from any unit will be sold by direct marketing. We will conduct an appraisal that will be used to determine your production to count sold by direct marketing. If damage occurs after this appraisal, we will conduct an additional appraisal. These appraisals, and any acceptable records provided by you, will be used to determine your production to count. Failure to give timely notice that production will be sold by direct marketing will result in an appraised amount of production to count that is not less than the production guarantee per acre if such failure results in our inability to make the required appraisal.

(5) At least 15 days prior to the beginning of harvest if you intend to claim an indemnity on any unit, as a result of previously reported damage, so that we may inspect the damaged production.

(b) You must not sell or dispose of the damaged crop until after we have given you written consent to do so. If you fail to meet the requirements of this section, and such failure results in our inability to inspect the damaged production, all such production will be considered undamaged and included as production to count.

(c) You may be required to harvest a sample, selected by us, to be used for appraisal purposes.

10. Settlement of Claim

(a) We will determine your loss on a unit basis. In the event you are unable to provide acceptable production records for any basic unit, we will allocate any commingled production to such units in proportion to our liability on the harvested acreage for each unit.

(b) In the event of loss or damage covered by this policy, we will settle your claim by:

(1) Multiplying the insured acreage for each type, if applicable, by its respective production guarantee;

(2) Multiplying each result in section 10(b)(1) by the respective price election, by type if applicable;

(3) Totaling the results in section 10(b)(2) if there is more than one type;

(4) Multiplying the total production to count for each blueberry type, if applicable, by the respective price election;

(5) Totaling the results in section 10(b)(4), if there is more than one type;

(6) Subtracting the result in section 10(b)(5) from the result in section 10(b)(3); and

(7) Multiplying the result in section 10(b)(6) by your share.

Example

You have 100 percent share in 25 acres of highbush blueberries with a production guarantee of 4,000 pounds per acre and a price election of $.45 per pound. You are only able to harvest 62,500 total pounds because adverse weather reduced the yield. Your indemnity would be calculated as follows:

(1) 25 acres × 4,000 pound production guarantee/acre = 100,000 pound total production guarantee;

(2) 100,000 pounds × $.45 price election = $45,000 guarantee;

(3) One type only, so same as (2) above $45,000;

(4) 62,500 pounds production to count × $.45 price election = $28,125 value of production to count;

(5) One type only, so same as (4) above $28,125;

(6) $45,000 − $28,125 = $16,875 loss; and

(7) $16,875 × 100 percent share = $16,875 indemnity payment.

End of Example

(c) The total production to count (in pounds) from all insurable acreage on the unit will include:

(1) All appraised production as follows:

(i) Not less than the production guarantee per acre for acreage:

(A) That is abandoned;

(B) That is sold by direct marketing if you fail to meet the requirements contained in section 9;

(C) That is damaged solely by uninsured causes; or

(D) For which you fail to provide production records;

(ii) Production lost due to uninsured causes; and

(iii) Potential production on insured acreage that you intend to abandon or no longer care for, if you and we agree on the appraised amount of production. Upon such agreement, the insurance period for that acreage will end. If you do not agree with our appraisal, we may

defer the claim only if you agree to continue to care for the crop. We will then make another appraisal when you notify us of further damage or that harvest is general in the area unless you harvest the crop, in which case we will use the harvested production. If you do not continue to care for the crop, our appraisal made prior to deferring the claim will be used to determine the production to count; and

(2) All harvested production from the insurable acreage.

(3) If mature blueberries, harvested or unharvested, are damaged by an insurable cause of loss specified in section 8 of these Crop Provisions, to the extent that the blueberries can not be sold as fresh or processed blueberries, and the percent of damage to the blueberries exceeds that shown in the Special Provisions for the type, production to count for the unit or portion of a unit will be as follows:

(i) The damaged blueberries will not be counted for that acreage if the blueberries are not sold; and

(ii) The production to count for damaged blueberries that are sold will be adjusted by dividing the price received for the damaged blueberries by the applicable price election and multiplying the resulting factor times the pounds sold.

(4) If we determine that frost protection equipment, as shown on your accepted application was not properly utilized, the indemnity for the affected acreage in the unit will be reduced by the percentage reduction allowed for frost protection equipment as specified in the Special Provisions. You must, at our request, provide us records by date for each period the frost protection equipment was used.

11. Late and Prevented Planting

The late and prevented planting provisions in the Basic Provisions are not applicable.

12. Written Agreements

The written agreement provisions in the Basic Provisions are not applicable, unless provided otherwise in the Special Provisions.

Signed in Washington, DC, on July 23, 2003.

Ross J. Davidson Jr.,

Administrator, Federal Crop Insurance Corporation.

[FR Doc. 03–19344 Filed 7–29–03; 8:45 am]

BILLING CODE 3410–08–P

NUCLEAR REGULATORY COMMISSION

10 CFR Part 50

RIN 3150–AG42

Risk-Informed Categorization and Treatment of Structures, Systems and Components for Nuclear Power Reactors

AGENCY: Nuclear Regulatory Commission.

ACTION: Proposed rule: Extension of comment period.

SUMMARY: On May 16, 2003 (68 FR 26511), the Nuclear Regulatory Commission (NRC) published in the **Federal Register** for a 75-day comment period proposed 10 CFR 50.69 ''Risk-Informed Categorization and Treatment of Structures, Systems, and Components for Nuclear Power Plants.'' The comment period for this proposed rule was to have expired on July 30, 2003. By letter dated July 3, 2003, Nuclear Energy Institute (NEI) requested a 30-day extension to the comment period. NEI indicated that this extension is to allow for the thorough review and refinement of comments developed by NEI's Option 2 task force and other constituents in the industry. In view of the importance of both the proposed rule and the industry's comments on it, the NRC has decided to extend the comment period by 30 days as requested.

DATE: The comment period has been extended and now expires on August 30, 2003. Comments received after this date will be considered if it is practical to do so, but the Commission is able to ensure consideration only for comments received on or before this date.

ADDRESSES: You may submit comments by any one of the following methods. Please include the following number (RIN 3150–AG42) in the subject line of your comments. Comments on rulemakings submitted in writing or in electronic form will be made available to the public in their entirety on the NRC rulemaking web site. Personal information will not be removed from your comments.

Mail comments to: Secretary, U.S. Nuclear Regulatory Commission, Washington, DC 20555–0001, ATTN: Rulemakings and Adjudications Staff.

E-mail comments to: *SECY@nrc.gov.* If you do not receive a reply e-mail confirming that we have received your comments, contact us directly at (301) 415–1966. You may also submit comments via the NRC's rulemaking web site at *http://ruleforum.llnl.gov.* Address questions about our rulemaking website to Carol Gallagher (301) 415–5905; email *cag@nrc.gov.*

Hand deliver comments to: 11555 Rockville Pike, Rockville, Maryland 20852, between 7:30 am and 4:15 pm Federal workdays. (Telephone (301) 415–1966).

Fax comments to: Secretary, U.S. Nuclear Regulatory Commission at (301) 415–1101.

Publicly available documents related to this rulemaking may be examined and copied for a fee at the NRC's Public Document Room (PDR), Public File Area O1 F21, One White Flint North, 11555 Rockville Pike, Rockville, Maryland. Selected documents, including comments, can be viewed and downloaded electronically via the NRC rulemaking web site at *http://ruleforum.llnl.gov.*

Publicly available documents created or received at the NRC after November 1, 1999, are available electronically at the NRC's Electronic Reading Room at *http://www.nrc.gov/NRC/ADAMS/index.html.* From this site, the public can gain entry into the NRC's Agencywide Document Access and Management System (ADAMS), which provides text and image files of NRC's public documents. If you do not have access to ADAMS or if there are problems in accessing the documents located in ADAMS, contact the NRC Public Document Room (PDR) Reference staff at 1–800–397–4209, 301–415–4737 or by email to *pdr@nrc.gov.*

FOR FURTHER INFORMATION CONTACT: Mr. Timothy Reed, Office of Nuclear Reactor Regulation, U.S. Nuclear Regulatory Commission, Washington DC 20555–0001; telephone (301) 415–1462; e-mail: *tar@nrc.gov.*

Dated at Rockville, Maryland this 22nd day of July, 2003.

For the Nuclear Regulatory Commission.

Annette L Vietti-Cook,

Secretary of the Commission.

[FR Doc. 03–19320 Filed 7–29–03; 8:45 am]

BILLING CODE 7590–01–P

DEPARTMENT OF TRANSPORTATION

Federal Aviation Administration

14 CFR Part 39

[Docket No. 2003–NE–12–AD]

RIN 2120–AA64

Airworthiness Directives; Rolls-Royce plc

AGENCY: Federal Aviation Administration (FAA), DOT.

ACTION: Notice of proposed rulemaking (NPRM).

SUMMARY: The FAA proposes to adopt a new airworthiness directive (AD) for Rolls-Royce plc (RR) RB211–22B series, RB211–524B, –524C2, –524D4, –524G2, –524G3, and –524H series, and RB211–535C and –535E series turbofan engines with high pressure compressor (HPC) stage 3 disc assemblies, part numbers (P/Ns) LK46210, LK58278, LK67634, LK76036, UL11706, UL15358, UL22577, UL22578, and UL24738 installed. This proposed AD would allow disc assemblies not modified by a certain RR service bulletin to reach their full life only after the disc assemblies are modified with anti-corrosion protection. This proposed AD is prompted by the manufacturer's reassessment of the corrosion risk on HPC stage 3 disc assemblies that have not yet been modified with sufficient application of anti-corrosion protection. The actions specified in this proposed AD are intended to prevent corrosion-induced uncontained disc failure, resulting in damage to the airplane.

DATES: We must receive any comments on this proposed AD by September 29, 2003.

ADDRESSES: Use one of the following addresses to submit comments on this proposed AD:

- By mail: Federal Aviation Administration (FAA), New England Region, Office of the Regional Counsel, Attention: Rules Docket No. 2003–NE–12–AD, 12 New England Executive Park, Burlington, MA 01803–5299.
- By fax: (781) 238–7055.
- By e-mail: *9-ane-adcomment@faa.gov*

You may get the service information identified in this proposed AD from Rolls-Royce plc, PO Box 31, Derby, England, DE248BJ; telephone: 011–44–1332–242424; fax: 011–44–1332–245–418.

You may examine the AD docket at the FAA, New England Region, Office of the Regional Counsel, 12 New England Executive Park, Burlington, MA.

FOR FURTHER INFORMATION CONTACT: Ian Dargin, Aerospace Engineer, Engine Certification Office, FAA, Engine And Propeller Directorate, 12 New England Executive Park; Burlington, MA 01803–5299; telephone (781) 238–7178; fax (781) 238–7199.

SUPPLEMENTARY INFORMATION:

Comments Invited

We invite you to submit any written relevant data, views, or arguments regarding this proposal. Send your comments to an address listed under **ADDRESSES.** Include ''AD Docket No. 2003–NE–12–AD'' in the subject line of your comments. If you want us to acknowledge receipt of your mailed comments, send us a self-addressed, stamped postcard with the docket number written on it; we will date-stamp your postcard and mail it back to you. We specifically invite comments on the overall regulatory, economic, environmental, and energy aspects of the proposed AD. If a person contacts us through a nonwritten communication, and that contact relates to a substantive part of this proposed AD, we will summarize the contact and place the summary in the docket. We will consider all comments received by the closing date and may amend the proposed AD in light of those comments.

We are reviewing the writing style we currently use in regulatory documents. We are interested in your comments on whether the style of this document is clear, and your suggestions to improve the clarity of our communications that affect you. You may get more information about plain language at *http://www.plainlanguage.gov.*

Examining the AD Docket

You may examine the AD Docket (including any comments and service information), by appointment, between 8 a.m. and 4:30 p.m., Monday through Friday, except Federal holidays. See **ADDRESSES** for the location.

Discussion

The Civil Aviation Authority (CAA), which is the airworthiness authority for the U.K., recently notified the FAA that an unsafe condition may exist on RR RB211–22B series, RB211–524B, –524C2, –524D4, –524G2, –524G3, and –524H series, and RB211–535C and –535E series turbofan engines with HPC stage 3 disc assemblies, P/Ns LK46210, LK58278, LK67634, LK76036, UL11706, UL15358, UL22577, UL22578, and UL24738 installed. The CAA advises that numerous disc assemblies have been found at overhaul inspection having corrosion-induced pitting. RR has reassessed the risk of corrosion-induced pitting of disc assemblies that have not incorporated any revision of RR service bulletin (SB) No. RB.211–72–9434, or any revision of RR SB No. RB.211–72–5420, which rework the discs and apply anti-corrosion protection, and RR has lowered the disc lives accordingly in the Time Limits Manuals.

Relevant Service Information

We have reviewed and approved the technical contents of Rolls-Royce plc SB No. RB.211–72–9434, Revision 4, dated January 12, 2000, and SB No. RB.211–72–5420, dated February 29, 1980, which describe procedures for reworking of HP compressor stage 3 rotor disc assemblies by machining, and application of anti-corrosion protection. The CAA, which is the airworthiness authority for the U.K., classified these SBs as mandatory and issued airworthiness directive 004–01–94, dated January 4, 2002.

FAA's Determination and Requirements of the Proposed AD

These Rolls-Royce plc RR RB211–22B series, RB211–524B, –524C2, –524D4, –524G2, –524G3, and –524H series, and RB211–535C and –535E series turbofan engines are manufactured in the U.K., are type-certificated for operation in the United States under the provisions of section 21.29 of the Federal Aviation Regulations (14 CFR 21.29) and the applicable bilateral airworthiness agreement. Pursuant to this bilateral airworthiness agreement, the CAA has kept us informed of the situation described above. We have examined the CAA's findings, reviewed all available information, and determined that AD action is necessary for products of this type design that are certificated for operation in the United States. Therefore, we are proposing this AD, which would require the following for affected HP compressor disc assemblies:

- Removing affected disc assemblies from service.
- Re-machining, inspecting, and applying anti-corrosion protection.
- Re-marking, and returning disc assemblies into service.

The proposed AD would require that these actions be done per the service information described previously.

Changes to 14 CFR Part 39—Effect on the Proposed AD

On July 10, 2002, we published a new version of 14 CFR part 39 (67 FR 47997, July 22, 2002), which governs the FAA's AD system. This regulation now includes material that relates to altered products, special flight permits, and alternative methods of compliance. This material previously was included in each individual AD. Since this material is included in 14 CFR part 39, we will not include it in future AD actions.

Costs of Compliance

There are approximately 2,000 RR RB211–22B series, RB211–524B, –524C2, –524D4, –524G2, –524G3, and –524H series, and RB211–535C and –535E series turbofan engines of the affected design in the worldwide fleet. We estimate that 1,000 engines installed

on airplanes of U.S. registry would be affected by this proposed AD. We also estimate that it would take approximately 31 work hours per engine to perform the proposed actions, and that the average labor rate is $65 per work hour. Required parts would cost approximately $38,000 per engine. Based on these figures, the total cost of the proposed AD to U.S. operators is estimated to be $40,015,000.

Regulatory Findings

We have determined that this proposed AD would not have federalism implications under Executive Order 13132. This proposed AD would not have a substantial direct effect on the States, on the relationship between the national Government and the States, or on the distribution of power and responsibilities among the various levels of government.

For the reasons discussed above, I certify that the proposed regulation:

1. Is not a ''significant regulatory action'' under Executive Order 12866;

2. Is not a ''significant rule'' under the DOT Regulatory Policies and Procedures (44 FR 11034, February 26, 1979); and

3. Would not have a significant economic impact, positive or negative, on a substantial number of small entities under the criteria of the Regulatory Flexibility Act.

We prepared a summary of the costs to comply with this proposal and placed it in the AD Docket. You may get a copy of this summary by sending a request to us at the address listed under **ADDRESSES.** Include ''AD Docket No. 2003-NE–12-AD'' in your request.

List of Subjects in 14 CFR Part 39

Air transportation, Aircraft, Aviation safety, Safety.

The Proposed Amendment

Accordingly, under the authority delegated to me by the Administrator, the Federal Aviation Administration proposes to amend 14 CFR part 39 as follows:

PART 39—AIRWORTHINESS DIRECTIVES

1. The authority citation for part 39 continues to read as follows:

Authority: 49 U.S.C. 106(g), 40113, 44701.

§ 39.13 [Amended]

2. The FAA amends § 39.13 by adding the following new airworthiness directive:

Rolls-Royce plc: Docket No. 2003–NE–12–AD.

Comments Due Date

(a) The FAA must receive comments on this airworthiness directive (AD) action by September 29, 2003.

Affected ADs

(b) None.

Applicability

(c) This AD is applicable to Rolls-Royce plc (RR) RB211–22B series, RB211–524B, –524C2, –524D4, –524G2, –524G3, and –524H series, and RB211–535C and –535E series turbofan engines with high pressure compressor (HPC) stage 3 disc assemblies, part numbers (P/Ns) LK46210, LK58278, LK67634, LK76036, UL11706, UL15358, UL22577, UL22578, and UL24738 installed. These engines are installed on, but not limited to, Boeing 747, Boeing 757, Boeing 767, Lockheed L–1011, and Tupolev Tu204 series airplanes.

Unsafe Condition

(d) This AD was prompted by the manufacturer's reassessment of the corrosion risk on HPC stage 3 disc assemblies that have not been modified sufficiently with application of anti-corrosion protection. The actions specified in this AD are intended to prevent corrosion-induced uncontained disc failure, resulting in damage to the airplane.

Compliance

(e) You are responsible for having the actions required by this AD performed within the compliance times specified unless the actions have already been done.

Removal of HPC Stage 3 Discs

(f) Remove from service affected HPC stage 3 disc assemblies identified in the following Table 1, using one of the following criteria:

TABLE 1.—AFFECTED HPC STAGE 3 DISC ASSEMBLIES

Engine model	Rework band for cycle life accumulated on disc assemblies P/Ns LK46210 and LK58278 (pre RR service bulletin (SB) No. RB.211–72–5420)	Rework band for cycle life accumulated on disc assembly P/N LK67634 (pre RR SB No. RB.211–72–5420)	Rework band for cycle life accumulated on P/Ns LK76036, UL11706, UL15358, UL22577, UL22578, and UL24738 disc assemblies (pre RR SB No. RB.211–72–9434)
–22B series	4,000–6,200	7,000–10,000	11,500–14,000
–535E4 series	N/A	N/A	9,000–15,000
–524B–02, B–B–02, B3–02, and B4 series, Pre and SB No. 72–7730	4,000–6,000	7,000–9,000	11,500–14,000
–524B2 and C2 series, Pre SB No. 72–7730	4,000–6,000	7,000–9,000	11,500–14,000
–524B2–B–19 and C2–B–19, SB No. 72–7730	4,000–6,000	7,000–9,000	8,500–11,000
–524D4 series, Pre SB No. 72–7730	4,000–6,000	7,000–9,000	11,500–14,000
–524D4–B series, SB No. 72–7730	4,000–6,000	7,000–9,000	8,500–11,000
–524G2, G3, H, and H2 series	4,000–6,000	7,000–9,000	8,500–11,000

(1) For discs that entered into service before 1992, remove disc and rework as specified in paragraph (g)(2) of this AD, within five years from the effective date of this AD, but not to exceed the upper cyclic limit of Table 1 of this AD before rework. Discs reworked may not exceed the published cyclic limit in the manufacturer's Time Limits Manual.

(2) For discs that entered into service in 1992 or later, remove disc within the cyclic life rework bands in Table 1 of this AD, or within 17 years after the date of the disc assembly entering into service, whichever is sooner, but not to exceed the upper cyclic limit of Table 1 of this AD before rework. Discs reworked may not exceed the published cyclic life in the manufacturer's Time Limits Manual.

(3) For disc assemblies that when new, were modified with an application of anti-corrosion protection and re-marked to P/N LK76036 (not previously machined) as specified by Part 1 of the original issue of RR service bulletin (SB) No. RB.211–72–5420, dated April 20, 1979, remove RB211–22B disc assemblies before accumulating 10,000 cycles-in-service (CIS), and remove RB211–524 disc assemblies before accumulating 9,000 CIS.

(4) If the disc assembly date of entry into service cannot be determined, the date of disc manufacture may be obtained from RR and used instead.

Optional Rework of HPC Stage 3 Discs

(g) Rework HPC stage 3 disc assemblies that were removed in paragraph (f) of this AD as follows:

(1) For disc assemblies that when new, were modified with an application of anti-corrosion protection and re-marked to P/N LK76036 (not previously machined) as specified by Part 1 of the original issue of RR SB RB.211–72–5420, dated April 20, 1979, rework disc assemblies and re-mark to either LK76034 or LK78814 in accordance with paragraph 2.B. of the Accomplishment Instructions of RR SB No. RB.211–72–5420, Revision 4, dated February 29, 1980. This rework constitutes terminating action to the removal requirements in paragraph (f) of this AD.

(2) For all other disc assemblies, rework in accordance with Paragraph 3B. of the Accomplishment Instructions of RR SB No. RB.211–72–9434, Revision 4, dated January 12, 2000. This rework constitutes terminating action to the removal requirements in paragraph (f) of this AD.

Note 1: If rework is done on disc assemblies that are removed before the disc assembly reaches the lower life of the cyclic life rework band in Table 1 of this AD, artificial aging of the disc to the lower life of the rework band, at time of rework, is required.

Alternative Methods of Compliance

(h) Alternative methods of compliance must be requested in accordance with 14 CFR part 39.19, and must be approved by the Manager, Engine Certification Office, FAA.

Material Incorporated by Reference

(i) The rework must be done in accordance with the following Rolls Royce service bulletins:

Document No.	Pages	Revision	Date
RB.211–72–5420	1	4	February 29, 1980.
	2	3	January 12, 1980.
	3–8	4	February 29, 1980.
	9–10	Original	April 20, 1979.
Total pages: 8			
RB.211–72–9434	All	4	January 12, 2000.
Total pages: 20			

Approval of incorporation by reference from the Office of the Federal Register is pending.

Related Information

(j) The subject of this AD is addressed in Civil Aviation Authority airworthiness directive 004–01–94.

Issued in Burlington, Massachusetts, on July 24, 2003.

Francis A. Favara,

Acting Manager, Engine and Propeller Directorate, Aircraft Certification Service.

[FR Doc. 03–19310 Filed 7–29–03; 8:45 am]

BILLING CODE 4910–13–P

DEPARTMENT OF TRANSPORTATION

Office of the Secretary

14 CFR Part 204

[Docket No. OST–03–15759]

RIN: 2105–AD25

Review of Data Filed by Certificated or Commuter Air Carriers To Support Continuing Fitness Determinations Involving Citizenship Issues

AGENCY: Office of the Secretary, DOT.

ACTION: Advance notice of proposed rulemaking (ANPRM); request for comments.

SUMMARY: In response to a report by the Inspector General of the U.S. Department of Transportation, the Department is asking for comments on two issues relating to air carrier continuing fitness determinations involving citizenship issues. First, the Inspector General identified a list of criteria the Department typically uses to determine actual control of an air carrier when evaluating the citizenship of an air carrier during a continuing fitness review. We seek comments on whether there are any other factors or criteria the Department routinely considers in its evaluations that should be added to this list. Second, the Department seeks comments on the need for a regulatory change to the requirements of 14 CFR part 204 applicable to certificated and commuter air carriers proposing to undergo a substantial change in operations, ownership, or management that may impact their U.S. citizenship status. The Inspector General found that the Department's informal process is not well-suited to complex, contentious, and controversial cases involving citizenship determinations and suggested that the Department allow greater transparency and public participation in such matters, including public notice when such a review is initiated and completed, as well as public access to information filed with the Department during such reviews.

DATES: Comments due on or before September 29, 2003. To the extent practicable, we will consider late-filed comments as we consider further action.

ADDRESSES: Submit comments to the Dockets Management System, U.S. Department of Transportation, Room PL 401, 400 Seventh Street, SW., Washington, DC 20590–0001. Comments should identify Docket Number OST–03–15759. If you wish to receive confirmation of receipt of your written comments, include a self-addressed, stamped postcard. You may also submit comments by e-mail by accessing the Dockets Management System Web site at *http://dms.dot.gov* and following the instructions for submitting a document electronically.

The Dockets Management System is located on the Plaza level of the Nassif Building at the Department of Transportation at the above address. You can review public dockets there between the hours of 9 a.m. and 5 p.m., Monday through Friday, except Federal holidays. You can also review comments on-line at the DOT Dockets Management System Web site at *http://dms.dot.gov.*

Anyone is able to search the electronic form of all comments received into any of our dockets by the name of the individual submitting the comment (or signing the comment, if submitted on behalf of an association, business, labor union, etc.). You may review DOT's complete Privacy Act Statement in the **Federal Register** published on April 11, 2000 (Volume 65, Number 70; Pages 19477–78) or you may visit *http://dms.dot.gov.*

FOR FURTHER INFORMATION CONTACT: Patricia L. Thomas, Chief Air Carrier Fitness Division, Department of Transportation, 400 Seventh Street, SW., Washington, DC 20590, (202) 366–9721.

SUPPLEMENTARY INFORMATION:

I. Electronic Access

An electronic copy of this document may be downloaded from the Internet using the universal resource locator (URL): *http://dms.dot.gov.* It is available 24 hours each day, 365 days each year. Please follow the instructions online for more information and help.

II. Background

Under 14 CFR 204.5, certificated and commuter air carriers that undergo or propose to undergo a substantial change in operations, ownership, or management must submit certain updated fitness information to the Department.[1] Section 204.5(c) specifies that, if such information is being filed in support of an application for new or amended certificate authority, it shall be filed in the docket seeking such authority as part of a public proceeding. For example, a certificated or commuter air carrier must apply for new or amended authority if its existing authority is not adequate for the performance of its planned service (*e.g.*, if a carrier wishes to serve a new city pair route in foreign air transportation, if a carrier holding all-cargo authority wishes to conduct passenger service, or if a carrier currently operating only small aircraft wishes to operate large aircraft). If the substantial change being proposed does not affect the carrier's authority to perform its service under its existing authority, then the information is reported directly to the Department's staff and is reviewed as part of an informal continuing fitness investigation, without a public proceeding. Examples of substantial changes that may not require a carrier to apply for new or amended authority include changes in the carrier's stockholders or management. The purpose of these informal reviews is to decide whether a more formal, public proceeding is warranted, and, thus, whether the carrier's authority should be modified, suspended, or revoked or the carrier should be subject to enforcement action.

During a continuing fitness review, Department staff may examine the carrier's ownership structure and whether the air carrier continues to satisfy all statutory citizenship tests and continues to be under the actual control of U.S. citizens. Under the control standard, we examine all of the facts to determine whether a foreign interest will have a substantial ability to influence the carrier's activities. See Acquisition of Northwest Airlines by Wings Holdings, Inc., Order 89–9–51, issued September 29, 1989, at 5; Application of Discovery Airways, Inc., Order 89–12–41, issued December 22, 1989, at 10; In the matter of USAir and British Airways, Order 93–3–17, issued March 15, 1993, at 19; and Application of North American Airlines, Inc., Order 89–11–8, issued November 6, 1989, at 6.

On March 4, 2003, the Inspector General of the U.S. Department of Transportation issued a letter to the Chairman of the House Transportation and Infrastructure Committee on the subject of the Department's procedures for making air carrier citizenship determinations in continuing fitness reviews, as well as a docketed proceeding before the Department (In the matter of the citizenship of DHL Airways, Inc., Docket OST–2002–13089). By this notice, we seek comments only on the procedural issues raised in the letter, not on the matter of DHL Airways.[2] The letter, which contains all of the Inspector General's recommendations on such procedural matters, is available in this docket at *http://dms.dot.gov.*

In the letter, the Inspector General recommended, first, that the Department should publicly address the factors used to determine whether an air carrier is under the ''actual control'' of U.S. citizens and, second, that the Department should consider whether to modify its procedures for reviewing an air carrier's citizenship status during a continuing fitness review.

With respect to the first recommendation, the Inspector General states, ''There are seven factors that frequently recur in past orders of the Department addressing the issue of actual control. These factors, while known to Department and aviation attorneys, have not been delineated in any one public document. Good public policy would suggest that the Department address these and other factors in a document that is widely available.'' The seven factors cited are: (1) Control via supermajority or disproportionate voting rights; (2) negative control/power to veto; (3) buy-out clauses; (4) equity ownership; (5) significant contracts; (6) credit agreements/debt; and (7) family relationships/business relationships.

We seek comments on whether there are other factors or criteria that the Department routinely considers in addition to those listed above. However, it is important to note that, in its decisions, the Department has repeatedly stated that citizenship determinations are necessarily made on a case-by-case basis due to the fact that every case has its own unique set of circumstances. Accordingly, the Department believes that its administrative precedent, published in Civil Aeronautics Board and Department of Transportation Orders, as noted above, shows that no single list of factors and criteria will be inclusive, due to the changing legal and market circumstances faced by carriers when organizing their corporate and financial structures.

With respect to the second recommendation, the Inspector General states that ''[t]he informal process used for citizenship reviews can be beneficial when the issues are not complex or contentious by providing for open dialogue between the Department and carriers to resolve matters expeditiously.'' However, the recommendation we seek comments on is as follows: ''For the future, we believe the Department should give consideration to a more transparent and formal process in complex and contentious cases. To that end, the Department's procedures would have to be modified to provide public notice of the initiation and completion of citizenship reviews; create dockets for third-party comments; provide third-party access to confidential documents, similar to those used in the Alliance Carrier review;[3] and obtain sworn or certified statements.''

III. Comments

In response to the Inspector General's letter, the Department seeks comments on the list of factors frequently used to evaluate whether an air carrier is actually controlled by U.S. citizens and the need for a regulatory change to its procedures for determining the citizenship of U.S. air carriers after a substantial change in operations, ownership, or management. Accordingly, this ANPRM requests comments on the Inspector General's proposals and on alternatives to such proposals.

Specifically, we invite commenters to submit data and information on the recommendations of the Inspector General and on the following issues as

[1] Section 204.2(l) defines substantial change in operations, ownership, or management as including but not limited to the following events: ''(1) changes in operations from charter to scheduled service, cargo to passenger service, short-haul to long-haul service, or (for a certificated air carrier) small-aircraft to large-aircraft operations; (2) the filing of a petition for reorganization or a plan of reorganization under Chapter 11 of the federal bankruptcy laws; (3) the acquisition by a new shareholder or the accumulation by an existing shareholder of beneficial control of 10 percent or more of the outstanding voting stock in the corporation; and (4) a change in the president, chief executive officer or chief operating officer, and/or a change in at least half of the other key personnel within any 12-month period or since its latest fitness review, whichever is the more recent period.''

[2] On March 5, 2003, in Docket OST–2002–13089, the Department issued a notice requesting comments on the Inspector General's report as it related to the matter of the citizenship of DHL Airways, Inc.

[3] The ''Alliance Carrier review'' refers to the Delta/Northwest/Continental code-share and frequent-flyer program reciprocity proceeding.

well as any other related issues that commenters believe may warrant consideration:

- The Inspector General letter identifies a list of criteria typically used to determine actual control of an air carrier (*i.e.*, (1) control via supermajority or disproportionate voting rights; (2) negative control/power to veto; (3) buy-out clauses; (4) equity ownership; (5) significant contacts; (6) credit agreements/debt; and (7) family relationships/business relationships). Are there any other factors or criteria the Department routinely considers that should be added to this list?
- Is the Department's current informal, undocketed process for reviewing the citizenship of certificated and commuter air carriers following a substantial change in operations, ownership, or management sufficient to meet the statutory goals and requirements of evaluating a carrier's continuing fitness prior to any decision to take public action?
- Should air carriers proposing a substantial change in operations, ownership, or management that may affect their citizenship status be subject to a formal, public review of their citizenship, and if so, under what circumstances?
- What are the benefits and burdens, including time, effort, or financial resources expended, to generate, maintain, or provide information that would be subject to such a docketed public review? How would an air carrier's ability to obtain timely financing be affected?
- What are the advantages and disadvantages of retaining the current rule at 14 CFR 204.5 without revision?
- Should the Department establish separate procedures for handing complex, contentious, and controversial citizenship questions that arise in the context of continuing fitness reviews? If so, what procedures would be appropriate, and what standards should be used to designate such cases?
- Should the Department issue a public notice when it initiates and/or completes a citizenship determination in the context of a continuing fitness review? How would such notice impact an air carrier's business? What impact would such notice have on the willingness of an air carrier contemplating a future change in ownership, operations, and/or management to have candid discussions with the Department before formalizing any transaction?
- How should competition issues and business confidentiality issues be addressed in any change to the current procedures?

To ensure that the Department identifies and considers a full range of issues related to any rulemaking action that may be proposed, comments and suggestions are invited from all interested parties, including certificated and commuter air carriers, industry groups, and the public.

Regulatory Analyses and Notices

All comments received before the close of business on the comment closing date indicated above will be considered and will be available for examination in the docket at the above address. Comments received after the comment closing date will be filed in the docket and will be considered to the extent practicable. In addition to late comments, the Department will also continue to file relevant information in the docket as it becomes available after the comment period closing date, and interested persons should continue to examine the docket for new material. A NPRM may be issued at any time after close of the comment period.

Executive Order 12866 (Regulatory Planning and Review) and DOT Regulatory Policies and Procedures

The Department has determined preliminarily that this document is a significant regulatory action under section 3(f) of Executive Order 12866 and, therefore, will be reviewed by the Office of Management and Budget. The Department has also determined preliminarily that this document is significant under the Department's regulatory policies and procedures given the degree of Congressional interest in this matter. It is not economically significant. At this time, the Department does not believe any proposed regulatory changes will interfere with any action taken or planned by another agency or to materially alter the budgetary impact of any entitlements, grants, user fees, or loan programs.

Changes to the way citizenship issues are addressed in continuing fitness reviews may cause increased burdens on the part of the air carriers, as well as the Department. Currently, there are approximately 175 carriers that hold certificates or commuter authorizations from the Department. All of these carriers are subject to the continuing fitness requirements, and all must report substantial changes in operations, ownership, or management to the Department for review. During calendar years 2001 and 2002, the Department instituted an average of 52 new continuing fitness cases each year, some of which involved citizenship issues. Based on the information received in response to this ANPRM, the Department intends to carefully consider the costs and benefits associated with this rulemaking.

Executive Order 13132 (Federalism Assessment)

The Department has analyzed this rulemaking action in accordance with the principles and criteria set forth in Executive Order 13132 and has determined that it does not have sufficient federalism implications to warrant consultation with State and local officials. The Department anticipates that any action taken will not preempt a State law or State regulation or affect the States' ability to discharge traditional State government functions. We encourage commenters to consider these issues, as well as matters concerning any costs or burdens that might be imposed on the States as a result of actions considered here.

Regulatory Flexibility Act

The Regulatory Flexibility Act (5 U.S.C. 601, *et seq.*) requires an agency to review regulations to assess their impact on small entities unless the agency determines that a rule is not expected to have a significant impact on a substantial number of small entities. The Department will analyze any action that might be proposed for the purpose of the Regulatory Flexibility Act.

Paperwork Reduction Act

Under the Paperwork Reduction Act, 44 U.S.C. 3501–3520, Federal agencies must obtain approval from the Office of Management and Budget (OMB) for each collection of information they conduct, sponsor, or require through regulations. Any action that might be contemplated in subsequent phases of this proceeding may involve a collection of information requirement for the purpose of the Paperwork Reduction Act of 1995. The Department, however, will evaluate any actions that might be considered in accordance with the terms of the Paperwork Reduction Act. We encourage commenters to consider these issues, as well as matters concerning any burdens that might be imposed as a result of actions considered here. Accordingly, the Department solicits comments on this issue.

Regulation Identifier (RIN)

A regulation identifier (RIN) is assigned to each regulatory action listed in the Unified Agenda of Federal Regulations. The Regulatory Information Service Center publishes the Unified Agenda in April and October of each year. The RIN contained in the heading of this document can be used to cross-

reference this action with the Unified Agenda.

Unfunded Mandates Reform Act

The Department will analyze any action that might be proposed for the purpose of the Unfunded Mandates Reform Act of 1995 to assess whether a rulemaking would impose unfunded mandates.

National Environmental Policy Act

The Department will analyze any action that might be proposed for the purpose of the National Environmental Policy Act of 1969 (42 U.S.C. 4321–4347) to determine whether there would be any effect on the quality of the environment.

(Authority: 49 U.S.C. Chapters 401, 411, 417; 14 CFR Part 204.)

Dated: July 24, 2003.

Michael W. Reynolds,

Acting Assistant Secretary for Aviation and International Affairs.

[FR Doc. 03–19455 Filed 7–25–03; 4:27 pm]

BILLING CODE 4910–62–P

DEPARTMENT OF HEALTH AND HUMAN SERVICES

Food and Drug Administration

21 CFR Parts 600, 606, 610, and 640

[Docket No. 2003N–0211]

Revisions to Labeling and Storage Requirements for Blood and Blood Components, Including Source Plasma

AGENCY: Food and Drug Administration, HHS.

ACTION: Proposed rule.

SUMMARY: The Food and Drug Administration (FDA) is proposing to revise the labeling and storage requirements for certain human blood and blood components, including Source Plasma, by combining, simplifying, and updating specific regulations applicable to container labeling and instruction circulars, and the shipping and storage temperatures for frozen noncellular blood components. This proposed rule would facilitate the use of a labeling system using machine-readable information that would be acceptable as a replacement for the ''ABC Codabar'' system for labeling blood and blood components. FDA is taking this action as part of its ''Blood Initiative'' to comprehensively review and, as necessary, revise its regulations, policies, guidances, and procedures related to the licensing and regulation of blood products. This proposed rule is intended to help ensure the continued safety of the blood supply, and to help ensure consistency in container labeling and storage temperatures.

DATES: Submit written or electronic comments on the proposed rule by October 28, 2003. See section VIII of this document for the proposed effective date of a final rule based on this document.

ADDRESSES: Submit written comments to the Division of Dockets Management (HFA–305), Food and Drug Administration, 5630 Fishers Lane, rm. 1061, Rockville, MD 20852. Submit electronic comments to *http://www.fda.gov/dockets/ecomments*.

FOR FURTHER INFORMATION CONTACT: Sharon A. Carayiannis, Center for Biologics Evaluation and Research (HFM–17), Food and Drug Administration, 1401 Rockville Pike, Rockville, MD 20852–1448, 301–827–6210.

SUPPLEMENTARY INFORMATION:

I. Background

A. Development of the International Society for Blood Transfusion (ISBT) 128

In the **Federal Register** of August 30, 1985 (50 FR 35472), FDA published a notice of availability entitled ''Guideline for the Uniform Labeling of Blood and Blood Components,'' which described the uniform container label for blood and blood components. The standard labels for blood and blood components recommended in the guideline incorporated barcode symbology known as ''ABC Codabar.''

In August 1989, the ISBT, an organization established to promote and maintain a high level of ethical, medical, and scientific standards in blood transfusion medicine and science throughout the world, recognized that ''ABC Codabar,'' the first barcoding system adopted by the health care industry, was becoming outdated and initiated the design of a new system using the barcode symbology known as Code 128 (identified hereafter as ISBT 128).

Currently, under § 606.121(c)(13) (21 CFR 606.121(c)(13)), the container label for blood and blood components may bear encoded information in the form of machine-readable symbols approved for use by the Director, Center for Biologics Evaluation and Research (CBER). On March 23, 1995, FDA asked the Blood Products Advisory Committee (BPAC) whether FDA should support conversion from the ''ABC Codabar'' system to the ISBT 128 system. BPAC voted in favor of FDA supporting the transition to the new barcoding system. The change to ISBT 128 was also supported by the Department of Defense (DoD), and by the blood industry including America's Blood Centers (ABC), American Association of Blood Banks (AABB), and American National Red Cross (ARC). In December 1996, the International Council for Commonality in Blood Bank Automation (ICCBBA) held an ISBT 128 Consensus Conference in Washington, DC, to provide an opportunity for dialogue among the affected industry groups and FDA. Although consensus was obtained for use of ISBT 128, some participants expressed concerns regarding implementation timeframes and costs of implementation to hospital transfusion services. However, the updated symbology used in ISBT 128 has numerous advantages over the ''ABC Codabar.'' In addition to other reasons, the conversion to ISBT 128 was supported because ISBT 128 is more secure, allows more flexibility in coding highly variable information, uses double-density coding to allow more information to be encoded in a limited space, and can be interpreted by some of the barcode readers used with ''ABC Codabar.''

The ICCBBA, including representatives from ABC, AABB, ARC, and DoD, developed and submitted to FDA a draft document that recommended that ISBT 128 replace the ''ABC'' Codabar system used on blood and blood component labels in the United States. ICCBBA recommended that the document entitled ''United States Industry Consensus Standard for the Uniform Labeling of Blood and Blood Components Using ISBT 128,'' Version 1.2.0 (draft standard), serve as the basis for FDA guidance on blood and blood component labeling. On November 21, 1998, FDA made a copy of the draft standard available on its Web site for public comment. In the **Federal Register** of November 27, 1998 (63 FR 65600), FDA announced the availability of the draft standard and requested public comment on both the use of ISBT 128 and timeframes for implementation. The ICCBBA revised the draft standard in response to public comment and submitted to FDA the revised document, ''United States Industry Consensus Standard for the Uniform Labeling of Blood and Blood Components Using ISBT 128,'' Version 1.2.0, dated November 1999 (the ''Version 1.2.0 Standard'').

FDA reviewed the draft standard, the comments received in response to the **Federal Register** notice of November 27, 1998, and the ''Version 1.2.0 Standard,''

and concluded that conformance to the ''Version 1.2.0 Standard,'' prepared and revised by ICCBBA, would help facilitate the use of a uniform container label for blood and blood components. In the **Federal Register** of June 6, 2000 (65 FR 35944), FDA announced the availability of a final guidance entitled ''Guidance for Industry: Recognition and Use of a Standard for the Uniform Labeling of Blood and Blood Components'' dated June 2000, which recognizes as acceptable, except where inconsistent with the regulations, use of the ''Version 1.2.0 Standard'' prepared by ICCBBA, and the implementation of the ISBT 128 uniform labeling system. Although FDA finds the system acceptable, FDA has identified two inconsistencies between the ''Version 1.2.0 Standard'' and the current requirements of § 606.121(c)(2) and (e)(1)(ii). This proposed rule would delete the current requirement of § 606.121(c)(2) to include the FDA assigned registration number on blood and blood component labels. This revision is intended to provide establishments flexibility in using the registration number or other recognized donation facility identification numbers, such as the ISBT facility code (which includes machine-readable information), as the unique facility identifier. Additionally, this proposed rule would delete the current requirement of § 606.121(e)(1)(ii) that the anticoagulant precede the proper name. However, until the date a final rule resulting from this proposal becomes effective, if a manufacturer intends to follow the ''Version 1.2.0 Standard'' in lieu of current § 606.121(c)(2) or (e)(1)(ii), a manufacturer would seek an approval for exceptions or alternatives under § 640.120 (21 CFR 640.120). Once the application for an alternative is approved, a manufacturer may use the ''Version 1.2.0 Standard'' to produce labels that meet FDA's labeling requirements.

B. Changes to Storage and Shipping Temperatures

FDA has reviewed data concerning the storage and shipping temperatures of frozen noncellular blood components, e.g., Cryoprecipitated Antihemophilic Factor and Fresh Frozen Plasma. We have determined that the current requirements for storage and shipping temperatures should be updated to ensure potency of the blood components over time and to provide more flexibility in inventory management. Therefore, we are proposing to revise the current storage and shipping temperatures for frozen noncellular blood components, both for transfusion and for further manufacturing use, to guard against degradation of the heat labile clotting factors. The proposed changes in shipping and storage temperatures are consistent with published data and current industry practice (Ref. 1).

II. Highlights of the Proposed Rule

FDA is proposing to remove, simplify, or update specific labeling regulations applicable to blood and blood components to be more consistent with current practices and to remove any unnecessary or outdated requirements. FDA is proposing to consolidate the labeling requirements for blood and blood components intended for transfusion and for blood and blood components intended for further manufacturing use. FDA is proposing to revise specific regulations to facilitate the use of a uniform container label for blood and blood components in the United States and internationally and to remove any inconsistency between the ''Version 1.2.0 Standard'' and the Federal regulations at § 606.121. The proposed rule would facilitate the use of a labeling system using the ISBT 128 machine-readable data. In addition, the proposal would facilitate the use of new labeling systems that may be developed in the future.

The proposed changes would also simplify the regulations by consolidating the regulations for labeling blood and blood components, including Source Plasma, into one section, making it unnecessary for blood establishments to refer to several sections of the regulations to find applicable labeling standards.

In addition to moving certain regulations to § 606.121, FDA is also proposing to revise some of the labeling provisions regarding storage and shipping temperatures for frozen noncellular blood components in proposed § 640.70(a)(3) and (b). FDA is proposing to revise storage and shipping temperatures in current §§ 600.15, 610.53, 640.34, 640.54, 640.69, and 640.76, (21 CFR 600.15, 610.53, 640.34, 640.54, 640.69, and 640.76) to help ensure the potency of the frozen noncellular blood components and for consistency between the labeling regulations and the regulations concerning shipping and storage temperatures of frozen noncellular blood components. As part of this rulemaking, FDA is proposing to update the temperature requirements and address as many labeling changes as possible at one time, thereby limiting the number of times establishments must revise container labels. Also, we have replaced ''shall'' with ''must'' in all places wherever it appears in the regulations.

A. Summary of Consolidation of Regulations in § 606.121

FDA is proposing to consolidate regulations so blood establishments may find all applicable labeling standards under one section of regulations. The regulations for labeling all blood and blood components would be moved from other sections of the regulations to § 606.121. The following table summarizes the regulations that would be revised, consolidated, and redesignated under the proposal. The table is intended to serve as a convenient reference for the consolidation of regulations; all revisions to the regulations are discussed later in this preamble. A current regulation listed in the table remaining unchanged may not be discussed further in the preamble.

Current Section:	Would be Revised, and/or Redesignated as:	Revisions Discussed in Section II of this document:
§ 606.121(a)	The Introductory paragraph of § 606.121, paragraph (a) is reserved	B
§ 606.121(b)	Revised only	B
§ 606.121(c)(1)	Revised only	B
§ 606.121(c)(2)	Revised only	C
§ 606.121(c)(3)	Revised only	B

Current Section:	Would be Revised, and/or Redesignated as:	Revisions Discussed in Section II of this document:
§ 606.121(c)(4)	Revised only	B
§ 606.121(c)(5)	§ 606.121(c)(8)(v)	B
§ 606.121(c)(6)	§ 606.121(c)(5)	B
§ 606.121(c)(7)	Unchanged	B
§ 606.121(c)(8)	Revised only	B
§ 606.121(c)(9)	§ 606.121(c)(8)(iv)	B
§ 606.121(c)(10)	§ 606.121(c)(6)	B
§ 606.121(c)(11)	§ 606.121(c)(10)	B
§ 606.121(c)(12)	§ 606.121(c)(9)	B
§ 606.121(c)(13)	Unchanged	C
§ 606.121(d)(1) to (d)(3)	Revised only	B
§ 606.121(d)(4)	Deleted	B
§ 606.121(d)(5)	§ 606.121(d)(4)	B
§ 606.121(e)(1)(i)	§ 606.121(e)(1)(ii)	B
§ 606.121(e)(1)(ii)	§ 606.121(e)(1)(i)	C
§ 606.121(e)(1)(iii)	Revised only	B
§ 606.121(e)(2)	Unchanged	B
§ 606.121(e)(3)	Deleted, see 606.121(c)(4)	B
§ 606.121(e)(4)	§ 606.121(e)(3)	B
§ 606.121(e)(5)(i)	§ 606.121(e)(4)(i)	B
§ 606.121(e)(5)(ii)	Deleted, see 606.121(e)(5)(i)	B
§ 606.121(e)(5)(iii)	§ 606.121(e)(4)(ii)	B
§ 606.121(f)	Revised only	B
§ 606.121(g)	Unchanged	B
§ 606.121(h)	Revised only	B
§ 606.121(i)(1) to (3)	Revised only, paragraph (i)(4) added	E
§ 606.121(i)(4)	§ 606.121(i)(5)	E
§ 606.121(i)(5)	§ 606.121(i)(6)	E
§ 606.121(j)	Revised only	B
§ 606.122(e), (f), and (m)	Revised only	E
§ 640.70(a), the introductory sentence	§ 606.121(e)(5)	B
§ 640.70(a)(1)	Deleted, see § 606.121(c)(1)	B
§ 640.70(a)(2)	§ 606.121(c)(10) and § 606.121(e)(5)(i)	B
§ 640.70(a)(3)	§ 606.121(e)(5)(ii)	D
§ 640.70(a)(4)	§ 606.121(e)(5)(iii)	B
§ 640.70(a)(5)	Deleted, see § 606.121(c)(3)	B
§ 640.70(a)(6)	The second sentence of § 606.121(c)(4)	B

Current Section:	Would be Revised, and/or Redesignated as:	Revisions Discussed in Section II of this document:
§ 640.70(a)(7)	§ 606.121(e)(5)(vi)	B
§ 640.70(a)(8)	§ 606.121(c)(11)	E
§ 640.70(a)(9)	§ 606.121(e)(5)(iv)	B
§ 640.70(a)(10) Deleted	see § 606.121(c)(2)	C
§ 640.70(a)(11)	§ 606.121(c)(11)	E
§ 640.70(b)	§ 606.121(e)(5)(v)	D

B. Proposed Revisions to Clarify and Consolidate Regulations, Including Source Plasma Regulations

The following proposed revisions are intended to consolidate the existing labeling regulations in § 640.70 into § 606.121. As part of the consolidation, labeling regulations in § 640.70 would be moved to § 606.121, and § 640.70 would be removed from the Code of Federal Regulations (CFR). This change would enable blood establishments to find all the labeling requirements for blood and blood components, including Source Plasma, in one section of the CFR rather than having to consult different sections of the CFR when manufacturing several products. Any redundant regulations have been eliminated. FDA is proposing minor edits for clarity.

1. Proposed Revisions to § 606.121(a)

FDA is proposing to amend § 606.121(a), which describes the container label requirements for blood and blood components, by redesignating current paragraph (a) to create an introductory paragraph under § 606.121 and reserving paragraph (a). Under the proposal, the first sentence of the introductory paragraph (current § 606.121(a)) would be revised by deleting the phrase ''except Source Plasma'' to provide that proposed § 606.121 applies to all blood and blood components, including Source Plasma.

2. Proposed Revisions to § 606.121(b)

FDA is proposing to amend § 606.121(b) by adding the phrase ''with any appropriate modifiers and attributes'' to clarify that the label may be altered under specific circumstances to adequately identify the contents of a container. Examples of appropriate modifiers include ''washed,'' ''frozen,'' and ''liquid.'' Examples of attributes include ''irradiated,'' and ''divided'' which indicate a process change. For consistency, FDA is proposing conforming amendments to § 606.121(c)(1) and (d)(2).

3. Proposed Revisions to § 606.121(c)

Because proposed § 606.121(c)(1) applies to the container label of all blood and blood components, including Source Plasma, FDA is proposing to delete current § 640.70(a)(1). The proposed revisions to § 606.121(c)(2) are discussed in section III.C.1 of this document.

FDA is proposing to revise § 606.121(c)(3) to require that labels include all the donor numbers or a pool number that would enable establishments to trace each individual unit in the pool to the donor. Proposed § 606.121(c)(3) includes the same requirements for container labels for pooled products found in § 640.70(a)(5); therefore, FDA is proposing to delete § 640.70(a)(5).

FDA is proposing to amend § 606.121(c)(4) to clarify the expiration date of pooled plasma and to delete § 606.121(e)(3) because it would be redundant with revised § 606.121(c)(4). Under the proposal, § 640.70(a)(6) would be revised and redesignated as the second sentence of § 606.121(c)(4). If Source Plasma intended for further manufacturing into noninjectable products is pooled, the expiration date is determined from the collection date of the oldest unit in the pool, and the pooling records must show the collection date for each unit in the pool. The proposed changes would simplify the regulations by moving the requirements for determining the expiration date of Source Plasma to the section that specifies requirements for an expiration date on the container label for blood and blood components.

Current § 606.121(c)(5) is redesignated and revised, as discussed in the following paragraph. FDA is proposing that current § 606.121(c)(6) remain unchanged and be redesignated as § 606.121(c)(5). Under the proposal, current § 606.121(c)(7) remains unchanged.

FDA is proposing to simplify the wording of § 606.121(c)(8)(i). Paragraphs 606.121(c)(8)(ii) and (c)(8)(iii) remain unchanged. FDA is proposing to redesignate § 606.121(c)(9) as § 606.121(c)(8)(iv) and to revise redesignated § 606.121(c)(8)(iv) by deleting the redundant phrase ''The statement.'' FDA is proposing to redesignate § 606.121(c)(5) as § 606.121(c)(8)(v) and to revise redesignated § 606.121(c)(8)(v) by deleting the redundant phrase ''If the product is intended for transfusion.''

FDA is proposing to redesignate current § 606.121(c)(12) as § 606.121(c)(9). FDA is proposing to revise redesignated § 606.121(c)(9) by adding a phrase to clarify that the labeling requirements would apply to products intended for manufacturing use when an ABO and/or Rh designation is appropriate. In addition, FDA is proposing to update redesignated §§ 606.121(c)(9)(ii) and (c)(9)(iii) by using current terminology for a weak expression of the D antigen on red blood cells. The revised section would read ''If the test using Anti-D Blood Grouping Reagent is negative but the test for weak D (formerly DU) is * * *''

Under the proposal, current § 606.121(c)(10) is redesignated as § 606.121(c)(6).

FDA is proposing to combine current § 606.121(c)(11) and part of current § 640.70(a)(2) and redesignate the combined regulations as proposed § 606.121(c)(10). FDA is proposing to revise redesignated § 606.121(c)(10) by adding a phrase to the first sentence to clarify that blood and blood components intended for further manufacturing use, and Source Plasma are subject to these requirements. Additionally, FDA is proposing to revise redesignated § 606.121(c)(10) by adding an alternative warning statement and provide for the use of ''other cautionary statements as approved by CBER.'' These proposed changes and the alternative warning statement reflect current industry practice. FDA is proposing to delete current § 606.121(e)(5)(ii) because it

would be redundant with redesignated § 606.121(c)(10).

4. Proposed Revisions to § 606.121(d)

FDA is proposing to amend § 606.121(d) by deleting the phrase ''Except for recovered plasma intended for manufacturing use or'' and revise the regulation to clarify that this paragraph applies to the container labels for all blood and blood components. Additionally, § 606.121(d) is revised to remove an obsolete mail code and to provide for the use of labels printed on materials other than paper. FDA is proposing to amend § 606.121(d)(1) to clarify the labeling requirements that apply to the ABO and Rh blood grouping label. The revised regulation remains consistent with current blood establishment practice and the proposed changes are intended only to make the regulations more descriptive and precise. In addition to the conforming amendment previously discussed, proposed § 606.121(d)(2) and (d)(3) are revised to clarify the labeling requirements, as well as provide for use of a variety of labeling color schemes.

FDA is proposing to delete current § 606.121(d)(4) requiring the use of ink colors that are a visual match to the specific color samples designated by the Director, CBER, and to redesignate current § 606.121(d)(5) as § 606.121(d)(4). As proposed, redesignated § 606.121(d)(4) (current § 606.121(d)(5)) would also be revised to update the regulations consistent with current industry practice, to provide a consistent label appearance, and to facilitate the use of black and white labels produced by on-demand printers while still allowing for the use of color coded labels if blood establishments wish to continue their use. FDA believes, consistent with current industry practice, that the use of color coded labels with strict adherence to specific color samples does not increase product safety, and that the use of black and white or color coded labels without specific color samples would not have an adverse affect on identification of the ABO blood group.

5. Proposed Revisions to § 606.121(e)

FDA is proposing to redesignate current § 606.121(e)(1)(i) as § 606.121(e)(1)(ii). FDA is proposing to redesignate current § 606.121(e)(1)(ii) as § 606.121(e)(1)(i) and to amend redesignated § 606.121(e)(1)(i) as discussed in section II.C.2 of this document. FDA is proposing to revise § 606.121(e)(1)(iii) by changing ''shall'' to ''must.'' Section 606.121(e)(2) remains unchanged.

FDA is proposing to delete current § 606.121(e)(3) because it is redundant with proposed § 606.121(c)(4) and redesignate current § 606.121(e)(4) as § 606.121(e)(3) and current § 606.121(e)(5) as § 606.121(e)(4). Additionally, a conforming amendment is proposed to current § 606.121(j) because it refers to the current § 606.121(e)(4). FDA is proposing to update redesignated § 606.121(e)(3) (current § 606.121(e)(4)) by changing ''shall'' to ''must.''

As proposed, redesignated § 606.121(e)(4)(i) and (e)(4)(ii) (current §§ 606.121(e)(5)(i) and (e)(5)(iii), respectively) remain unchanged. Consistent with current industry practice, FDA is proposing to add § 606.121(e)(4)(iii) to require establishments to state on the container label the type of anticoagulant from which the recovered plasma was prepared.

FDA is proposing to add new § 606.121(e)(5) to include the provisions in the introductory sentence of current § 640.70(a), part of § 640.70(a)(2), and §§ 640.70(a)(3), (a)(4), (a)(7), (a)(9), and (b). Proposed § 606.121(e)(5) would clarify and consolidate in § 606.121 labeling requirements specific for Source Plasma. As proposed, redesignated § 606.121(e)(5)(i) (part of current § 640.70(a)(2)) would be updated, consistent with proposed § 606.121(c)(10), to provide flexibility in the use of upper and lowercase types in cautionary statements. Additional revisions to redesignated §§ 606.121(e)(5)(ii) (current § 640.70(a)(3)) and 606.121(e)(5)(v) (current §§ 640.70(a)(3) and (b), respectively) are discussed in section II.D of this document. FDA is proposing to redesignate current § 640.70(a)(7) as § 606.121(e)(5)(vi). Under the proposal, FDA would update redesignated § 606.121(e)(5)(vi) (current § 640.70(a)(7)) to broaden the labeling requirements to include collections from donors who are not immunized but are in specific collection programs, such as disease associated collections from donors who have antibodies to cytomegalovirus. FDA is proposing to redesignate current § 640.70(a)(4) as § 606.121(e)(5)(iii) and current § 640.70(a)(9) as § 606.121(e)(5)(iv).

6. Proposed Revisions to §§ 606.121(f) and (h)

FDA is proposing to amend § 606.121(f) by revising the last sentence. The proposed change would clarify that all blood and blood components intended solely for further manufacturing, including recovered plasma and Source Plasma, do not need to be labeled ''NOT FOR TRANSFUSION'' because their intended use for further manufacturing is clearly stated on the label. Section 606.121(g) remains unchanged. Under the proposal, § 606.121(h) would be revised by changing ''shall'' to ''must'', and ''640.2(f)'' to read ''§ 610.40(g)''.

7. Summary of Consolidation of Regulations in § 640.70 into § 606.121

As previously discussed in this section, FDA is proposing to consolidate the existing labeling regulations in § 640.70 into § 606.121. As part of the consolidation, regulations that currently exist in both sections would be found only in § 606.121 as follows:

- § 640.70(a)(1) is deleted because it is redundant with proposed § 606.121(c)(1).
- § 640.70(a)(2) is revised and redesignated as proposed § 606.121(c)(10) and as proposed § 606.121(e)(5)(i).
- § 640.70(a)(4) is revised and redesignated as § 606.121(e)(5)(iii).
- § 640.70(a)(5) is removed because it is redundant with proposed § 606.121(c)(3).
- § 640.70(a)(6) is revised and redesignated as the second sentence of proposed § 606.121(c)(4).
- § 640.70(a)(7) is revised and redesignated as § 606.121(e)(5)(vi).
- § 640.70(a)(9) is revised and redesignated as § 606.121(e)(5)(iv).

C. Proposed Revisions to Clarify and Consolidate Regulations Related to Use of a Labeling System Using Machine-Readable Information

The proposed revisions discussed in this section of this document are primarily intended to allow for the use of a machine-readable encoded information system, such as ISBT 128. Those changes would allow manufacturers of blood, blood components, and Source Plasma to submit product specific labeling that is consistent with approved labeling formats, such as ISBT 128, to the Director, CBER, for approval without requesting a variance under § 640.120. Under this proposal, § 606.121(c)(13) would remain unchanged. In the **Federal Register** of March 14, 2003 (68 FR 12499) FDA issued a proposed rule entitled ''Bar Code Label Requirements for Human Drug Products and Blood'' (proposed Bar Code Rule), that would amend § 606.121(c)(13) to require certain human drug and biological product labels to bear bar codes and also would require the use of machine-readable information on container labels for blood and blood components intended for transfusion. The proposed

Bar Code Rule specifically invites comment on whether FDA should require the use of ISBT 128, or require ''machine-readable information'' as approved by the Director, CBER, or some other standard or symbology. If you are interested in commenting on the use of bar codes on container labels for blood and blood components for transfusion, please refer to the proposed Bar Code Rule and submit your comments (see 68 FR 12499).

1. Proposed revisions to § 606.121(c)(2)

FDA is proposing to amend § 606.121(c)(2) by replacing ''registration number'' with ''unique facility identifier.'' This change would remove the requirement to include the FDA assigned registration number on blood and blood component labels. Although the FDA assigned registration number is acceptable as a ''unique facility identifier,'' the proposal would also provide for the use of other recognized donation facility identification numbers, such as the ISBT facility code (which includes machine-readable information). Consistent with the general provisions for licensing in 21 CFR part 601, establishments collecting Source Plasma may use their registration number or other recognized donation facility identification number as the unique facility identifier which would aid in identifying the location where the product was collected. Under the proposal, current § 640.70(a)(10) would be removed because the requirements of § 640.70(a)(10) for ''name, address, and license number'' on the Source Plasma label are included in proposed § 606.121(c)(2).

2. Proposed Revisions to § 606.121(e)(1)(i)

As previously discussed in section II.B of this document, FDA is proposing to amend redesignated § 606.121(e)(1)(i) (current § 606.121(e)(1)(ii)). This revision is intended to facilitate the use of a labeling system using machine-readable information, such as ISBT 128, by providing more flexibility in labeling. Specifically, this revision would remove the labeling requirements regarding the placement and prominence of the anticoagulant.

D. Proposed Revisions Related to Temperature Requirements

FDA is proposing revisions to update temperature requirements for storage and shipment of blood and blood components. The proposed changes described in this section are intended to provide consistency with data published in Europe and to help ensure the potency of blood and blood components by guarding against the degradation of heat labile clotting factors during storage and shipment (Ref. 1). Because these storage and shipping temperatures may be reflected in the product labeling, FDA is proposing to update the temperature requirements in this rulemaking to address as many labeling changes as possible as part of this rulemaking and enable establishments to make a number of revisions to labels for blood products at one time. This revision would simplify labeling of blood and blood components. Additionally, this approach is intended to reduce the burden on industry by minimizing the number of times blood container labels must be revised and reordered.

1. Proposed Revisions to §§ 610.53, 640.34, and 640.54

FDA is proposing to revise §§ 610.53, and 640.34(b) by changing ''shall'' to ''must'', and by changing the storage and shipping temperatures for Cryoprecipitated Antihemophiliac Factor (AHF) and for Fresh Frozen Plasma to -25 °C or colder if stored for 24 months after the date of collection, and -18 to -25 °C if stored for 3 months after the date of collection. FDA is proposing changes to § 640.54 for consistency with the proposed changes in shipping and storage temperatures for Cryoprecipitated AHF.

2. Proposed Revisions to §§ 640.69, 640.70, and 640.76

As previously mentioned, FDA is proposing to redesignate current § 640.70(a)(3) as § 606.121(e)(5)(ii). FDA is proposing to revise redesignated § 606.121(e)(5)(ii) (current §§ 640.70(a)(3)), 640.69(c), and 640.76(a) and (b) by changing the storage and shipping temperatures for Source Plasma to -30 °C and -15 °C, respectively, or colder. FDA is proposing to redesignate current § 640.70(b) as § 606.121(e)(5)(v), and to revise redesignated § 606.121(e)(5)(v) by changing the storage and shipping temperatures for Source Plasma diverted for Source Plasma Salvaged to -30 °C and -15 °C, respectively, or colder.

3. Proposed Revisions to § 640.34

FDA is proposing to revise § 640.34(g)(2) to clarify that frozen plasma must be stored at appropriate temperatures to ensure product potency.

E. Proposed Changes to Clarify and Consolidate Regulations Related to Communicable Disease Testing, and Autologous Donations

The proposed revisions discussed in this section of this document would require labels for blood, blood components, and Source Plasma to include the results of the communicable disease tests performed on a sample of the donor's blood obtained at the time of the blood donation. The proposed regulations would require establishments to include on product labels the results of all communicable disease testing performed as required in § 610.40. Currently in §§ 606.121 and 640.70, only the results of tests for Hepatitis B surface antigen (HBsAg) and antibody to Human Immunodeficiency Virus (anti-HIV) are required on the label. In the **Federal Register** of June 11, 2001 (66 FR 31146), FDA published a related rulemaking entitled ''Requirements for Testing Human Blood Donors for Evidence of Infection Due to Communicable Disease Agents'' (the testing final rule). The proposed revisions are consistent with the requirements of the testing final rule.

1. Proposed Revisions to Redesignated § 606.121(c)(11)

FDA is proposing to redesignate current §§ 640.70(a)(8) and (a)(11) as § 606.121(c)(11) and to revise redesignated § 606.121(c)(11) to require labeling statements based on communicable disease test results. The proposed change provides that the labeling requirements apply to Source Plasma and would require establishments to label products for further manufacture with the results of all required communicable disease testing performed in accordance with § 610.40.

2. Proposed Addition to § 606.121(c)(12)

As previously described in this section, FDA is proposing to redesignate current § 606.121(c)(12) as § 606.121(c)(9), and to add new § 606.121(c)(12). Proposed § 606.121(c)(12) is intended to clarify that blood establishments would be permitted under certain circumstances to use blood or blood components which test repeatedly reactive for communicable disease agents, provided the units are appropriately labeled to indicate all test results. This labeling change is consistent with the labeling requirements of § 610.40 of the testing final rule described in the previous paragraph.

3. Proposed Revisions to § 606.121(i)

FDA is proposing to revise § 606.121(i) by using more descriptive and precise terms, by replacing the word ''shall'' with ''must'' and by replacing ''Whole Blood or Red Blood Cells'' with ''blood or blood components.'' Section 606.121(i)(1) would be revised consistent with industry practice by adding ''date of birth'' to the list of examples of information that may be used to help ensure correct identification of the autologous transfusion recipient. In addition, FDA is proposing to delete the words ''blood group'' from the list of information that may identify an autologous transfusion recipient in § 606.121(i)(1). No revision is proposed for § 606.121(i)(2). FDA is proposing to revise § 606.121(i)(3) to simplify the requirements and to provide consistency with current industry practice and with the requirements for appropriate donor classification proposed in redesignated § 606.121(c)(8)(v). FDA is proposing to add new paragraph (i)(4) to clarify and update the existing requirements. Accordingly, FDA is proposing to redesignate current §§ 606.121(i)(4) and (i)(5) as § 606.121(i)(5) and (i)(6), respectively.

FDA is proposing to revise redesignated § 606.121(i)(5) (current § 606.121(i)(4)) to provide that the label for blood or blood components intended for autologous transfusion must be labeled as ''FOR AUTOLOGOUS USE ONLY'' if obtained from a donor who is reactive to one or more tests for evidence of infection due to communicable disease agents. Current § 606.121(i)(4) is specific for the tests currently required in the regulations. Consistent with the testing final rule, the proposed revision to redesignated § 606.121(i)(5) (current § 606.121(i)(4)) would provide for appropriate labeling regardless of how testing standards may change in the future. FDA is proposing to update redesignated § 606.121(i)(6) (current § 606.121(i)(5)), revising it by replacing ''homologous'' with ''allogeneic.''

4. Proposed Revisions to § 606.122

FDA is proposing to amend § 606.122 *Instruction circular* by revising the introductory paragraph and paragraphs (e), (f), and (m). Section 606.122 requires that an instruction circular must be available for distribution if the product is intended for transfusion. The introductory paragraph would be revised to replace ''shall'' with ''must''. Current § 606.122(e) requires that the instruction circular contain statements that the product was prepared from blood that was negative when tested for antibody to human immunodeficiency virus (HIV), was nonreactive for hepatitis B surface antigen by FDA required tests and nonreactive when tested by a serological test for syphilis. Proposed § 606.122(e) would clarify that the instruction circular must contain statements regarding the results of all required infectious agent testing. By making this change, it would become unnecessary to revise the labeling regulations as testing requirements may be revised in the future. FDA is proposing to amend § 606.122(f) by updating the warning statement, which currently refers only to the hazard of transmitting hepatitis, to reflect the risk associated with the communicable disease agents for which testing is currently performed.

Note that the terms ''infectious agent testing'' and ''communicable disease testing'' (used interchangeably in this proposed rule and in guidance documents) refer to the same testing performed in accordance with § 610.40. The term ''infectious agent'' is used rather than ''communicable disease agent'' for consistency with the ''Version 1.2.0 Standard.''

FDA is proposing to amend the introductory phrase in § 606.122(m), and paragraphs (m)(2), (m)(3), and (m)(5) to update the information required in the instruction circular for plasma. In the introductory sentence of § 606.122(m), FDA is proposing to update the regulations by replacing the word ''shall'' with ''must.'' Section 606.122(m)(1) would remain unchanged. FDA is proposing to revise § 606.122(m)(2) and (m)(3) to clarify that the instruction circular must contain instructions to thaw the frozen product at a temperature ''appropriate for the product'' and, when applicable, instructions to begin administration of the product within ''a specified time'' after thawing, respectively. The proposed changes would provide greater flexibility in the instruction circular, and would provide for various new thawing methods and procedures for administration that might be used in the future without requiring additional changes to the regulation.

FDA is proposing to amend § 606.122(m)(5), consistent with the changes in proposed redesignated § 606.122(e), to update the information in the instruction circular regarding the transfusion of plasma to warn of the risk of transmission of many communicable disease agents, rather than refer only to the hazard of transmitting hepatitis.

III. Analysis of Impacts

FDA has examined the impacts of the proposed rule under Executive Order 12866 and the Regulatory Flexibility Act (5 U.S.C. 601–612, and the Unfunded Mandates Reform Act of 1995 (Public Law 104–4). Executive Order 12866 directs agencies to assess all costs and benefits of available regulatory alternatives and, when regulation is necessary, to select regulatory approaches that maximize net benefits (including potential economic, environmental, public health and safety, and other advantages; distributive impacts; and equity). Section 202(a) of the Unfunded Mandates Reform Act of 1995 requires that agencies prepare a written statement of anticipated costs and benefits before proposing any rule that may result in an expenditure by State, local, and tribal governments, in the aggregate, or by the private sector, of $100 million in any one year (adjusted annually for inflation). Under the Regulatory Flexibility Act, unless an agency certifies that a rule will not have a significant economic impact on a substantial number of small entities, the agency must analyze regulatory options that would minimize any significant impact of a rule on small entities.

The agency has reviewed this proposed rule and believes that it is consistent with the regulatory philosophy and principles identified in the Executive order and these two statutes. The proposed rule is not a significant regulatory action as defined by the Executive order and so is not subject to review under the Executive order. No further analysis is required under the Regulatory Flexibility Act because the agency has determined that these proposed rule amendments have no compliance costs and will not have a significant effect on a substantial number of small entities. This proposed rule also does not trigger the requirements for a written statement under section 202(a) of the Unfunded Mandates Reform Act because it does not impose a mandate that results in expenditure of $100 million or more by State, local, and tribal governments in the aggregate, or by the private sector in any one year.

The purpose of the proposed rule amendments is to simplify and unify the existing labeling standards. Labeling standards are currently found in multiple sections of the regulations and these amendments would move these standards to one section of the regulations. By revising, consolidating, and redesignating these regulations, parties wishing to understand the labeling requirements will be able to

refer to a single source. The proposed rule amendments also include provisions that add flexibility to the regulations that should lower the cost of compliance.

Some aspects of the proposed rule amendments do establish new label requirements and provisions. One such requirement is that the label must reflect updated testing requirements. The agency believes these requirements, including the requirement for the label to reflect updated testing requirements, conform to current industry practice and do not impose an additional burden.

The proposed rule requires a change in the instruction circular to reflect current testing practices. Existing labeling regulations do not allow the circular to reflect current required testing or to adjust to future changes in required testing or plasma thawing procedures. The agency believes the instruction circular would already be in compliance with the proposed rule amendments and reflect current requirements and practices if compliance were permitted by existing regulations. By adding flexibility to the rules regarding the instruction circular, the proposed rule lowers the overall cost of compliance. Moreover, as the instruction circular is updated regularly, the agency believes any required changes can be made in the ordinary revision cycle and that this rule will not impose an additional burden.

The proposed rule amendments also update the temperature requirements for storage and shipping of blood and blood components. The agency believes that these requirements reflect current industry practice and do not impose an additional burden.

In general, the agency believes the proposed rule will have no compliance costs, because any requirements are either industry practice or would be industry practice absent existing prohibitions. Because the agency believes these proposed rule amendments have no compliance costs, the agency certifies they will not have a significant economic impact on a substantial number of small entities.

IV. The Paperwork Reduction Act of 1995

This proposed rule contains information collection provisions that are subject to review by the Office of Management and Budget (OMB) under the Paperwork Reduction Act of 1995 (44 U.S.C. 3501–3520). As previously described, FDA is proposing to consolidate regulations so blood establishments may find all applicable labeling standards under one section of regulations. The regulations for labeling of all blood and blood components would be moved from other sections of the regulations to § 606.121. Since the agency believes the proposed rule amendments conform to current industry practice, FDA is not estimating the burden of the proposed rule. The information collection requirements under §§ 606.121 and 606.122 are approved under OMB control number 0910–0116.

V. Environmental Impact

The agency has determined under 21 CFR 25.30(j) that this action is of a type that does not individually or cumulatively have a significant effect on the human environment. Therefore, neither an environmental assessment nor an environmental impact statement is required.

VI. Federalism

FDA has analyzed this proposed rule in accordance with the principles set forth in Executive Order 13132. FDA has determined that the rule does not contain policies that have substantial direct effects on the States, on the relationship between the National Government and the States, or on the distribution of power and responsibilities among the various levels of government. Accordingly, the agency has concluded that the rule does not contain policies that have federalism implications as defined in the Executive order and, consequently, a federalism summary impact statement is not required.

VII. Request for Comments

Interested persons may submit to the Division of Dockets Management (see **ADDRESSES**) written or electronic comments regarding this proposed rule. Submit a single copy of electronic comments or two paper copies of any mailed comments, except that individuals may submit one paper copy. Comments are to be identified with the docket number found in brackets in the heading of this document. Received comments may be seen in the Division of Dockets Management between 9 a.m. and 4 p.m., Monday through Friday.

VIII. Proposed Effective Date

The agency is proposing that any final rule that may issue based upon this proposed rule become effective 180 days after its date of publication in the **Federal Register**.

IX. Reference

The following reference has been placed on display in the Division of Dockets Management (see **ADDRESSES**) and may be seen by interested persons between 9 a.m. and 4 p.m., Monday through Friday.

1. Krotitschke, R., ''Stability of Fresh Frozen Plasma: Results of 36-Month Storage at -20 °C, -25 °C, -30 °C, and -40 °C,'' *Infusion Therapy and Transfusion Medicine*, 27:174–180, 2000.

List of Subjects

21 CFR Part 600

Biologics, Reporting and recordkeeping requirements.

21 CFR Part 606

Blood, Labeling, Laboratories, Reporting and recordkeeping requirements.

21 CFR Part 610

Biologics, Labeling, Reporting and recordkeeping requirements.

21 CFR Part 640

Blood, Labeling, Reporting and recordkeeping requirements.

Therefore, under the Federal Food, Drug, and Cosmetic Act, and the Public Health Service Act, and under authority delegated to the Commissioner of Food and Drugs, it is proposed that 21 CFR parts 600, 610, 606, and 640 be amended as follows:

PART 600—BIOLOGICAL PRODUCTS: GENERAL

1. The authority citation for 21 CFR part 600 continues to read as follows:

Authority: 21 U.S.C. 321, 351, 352, 353, 355, 360, 360i, 371, 374; 42 U.S.C. 216, 262, 263, 263a, 264, 300aa–25.

2. Section 600.15 is amended in the table in paragraph (a) by revising the entries for Cryoprecipitated AHF, Fresh Frozen Plasma, and Source Plasma to read as follows:

§ 600.15 Temperatures during shipment.

* * * * *

(a) Products.

Product	Temperature
Cryoprecipitated AHF	-25 °C or colder if expiration is 24 months or -18 to -25 °C if expiration is 3 months.
.....	

* * * * * * *

Product	Temperature
Fresh Frozen Plasma	-25 °C or colder if expiration is 24 months or -18 to -25 °C if expiration is 3 months.
* * * * * * *	
Source Plasma	-15 °C or colder.
* * * * * * *	

* * * * *

PART 606—CURRENT GOOD MANUFACTURING PRACTICE FOR BLOOD AND BLOOD COMPONENTS

3. The authority citation for 21 CFR part 606 continues to read as follows:

Authority: 21 U.S.C. 321, 331, 351, 352, 355, 360, 360j, 371, 374; 42 U.S.C. 216, 262, 263a, 264.

4. Section 606.121 is revised to read as follows:

§ 606.121 Container label.

The container label requirements are designed to facilitate the use of a uniform container label for blood and blood components, including Source Plasma, by all blood establishments.

(a) [Reserved]

(b) The label provided by the collecting facility and the initial processing facility must not be removed, altered, or obscured, except that the label may be altered to indicate the proper name, with any appropriate modifiers and attributes, and other information required to identify accurately the contents of a container after blood components have been prepared.

(c) The container label must include the following information, as well as other specialized information as required in this section for specific products:

(1) The proper name of the product in a prominent position, with any appropriate modifiers and attributes;

(2) The name, address, unique facility identifier, and, if a licensed product, the license number of each manufacturer;

(3) The donor or lot number relating the unit to the donor. If pooled, all donor numbers, all donation numbers, or a pool number that is traceable to each individual unit comprising the pool;

(4) The expiration date, including the day, month, and year, and, if the dating period for the product is 72 hours or less, including any product prepared in a system that might compromise sterility, the hour of expiration. If Source Plasma intended for manufacturing into noninjectable products is pooled, the expiration date is determined from the collection date of the oldest unit in the pool, and the pooling records must show the collection date for each unit in the pool.

(5) For Whole Blood, Plasma, Platelets, and partial units of Red Blood Cells, the volume of the product, accurate to within ±10 percent; or optionally for Platelets, the volume range within reasonable limits.

(6) Where applicable, the name and volume of source material.

(7) The recommended storage temperature (in degrees Celsius).

(8) If the product is intended for transfusion, the statements:

(i) ''Rx only.''

(ii) ''See Circular of Information for indications, contraindications, cautions, and methods of infusion.''

(iii) ''Properly identify intended recipient.''

(iv) ''This product may transmit infectious agents.''

(v) The appropriate donor classification statement, i.e., ''paid donor'' or ''volunteer donor,'' in no less prominence than the proper name of the product.

(A) A paid donor is a person who receives monetary payment for a blood donation.

(B) A volunteer donor is a person who does not receive monetary payment for a blood donation.

(C) Benefits, such as time off from work, membership in blood assurance programs, and cancellation of nonreplacement fees that are not readily convertible to cash, do not constitute monetary payment within the meaning of this paragraph.

(9) If the product is intended for transfusion or as is otherwise appropriate, the ABO group and Rh type of the donor must be designated conspicuously. For Cryoprecipitated Antihemophiliac Factor (AHF), the Rh type may be omitted. The Rh type must be designated as follows:

(i) If the test using Anti-D Blood Grouping Reagent is positive, the product must be labeled: ''Rh positive.''

(ii) If the test using Anti-D Blood Grouping Reagent is negative but the test for weak D (formerly Du) is positive, the product must be labeled: ''Rh positive.''

(iii) If the test using Anti-D Blood Grouping Reagent is negative and the test for weak D (formerly Du) is negative, the product must be labeled: ''Rh negative.''

(10) If the product is not intended for transfusion, a statement as applicable: ''Caution: For Manufacturing Use Only,'' or ''Caution: For Use in Manufacturing Noninjectable Products Only,'' or other cautionary statement as approved by the Director, Center for Biologics Evaluation and Research (CBER).

(11) If the product is intended for further manufacturing use, a statement listing the names and results of all the tests for communicable disease agents for which the donation has been tested and found negative.

(12) The blood and blood components must be labeled in accordance with § 610.40, when the donation is tested and demonstrates evidence of infection due to a communicable disease agent(s).

(13) The container label may bear encoded information in the form of machine-readable symbols approved for use by the Director, Center for Biologics Evaluation and Research (HFB-1).

(d) Unless otherwise approved by the Director, CBER, the container label must be white and print must be solid black, with the following additional exceptions:

(1) The ABO and Rh blood groups must be printed as follows:

(i) Rh positive: Use black print on white background and use solid black or other solid color for ABO.

(ii) Rh negative: Use white print on black background for Rh and use black outline for ABO.

(2) The proper name of the product, with any appropriate modifiers and attributes, the donor classification statement, and the statement ''properly identify intended recipient'' may be printed in solid red or in solid black.

(3) The following color scheme may be used for differentiating ABO Blood groups:

Blood group	Color of label
O	Blue
A	Yellow
B	Pink
AB	White

(4) Special labels, such as those described in paragraphs (h) and (i) of this section, may be color coded.

(e) Container label requirements for particular products or groups of products.

(1) Whole Blood labels must include:

(i) The name of the applicable anticoagulant approved for use by the Director, CBER.

(ii) The volume of anticoagulant.

(iii) If tests for unexpected antibodies are positive, blood intended for transfusion must be labeled: ''Contains (name of antibody).''

(2) Except for frozen, deglycerolized, or washed Red Blood Cell products, red blood cell labels must include:

(i) The volume of Whole Blood, and the type of anticoagulant with which the product was prepared.

(ii) If tests for unexpected antibodies are positive and the product is intended for transfusion, the statement: ''Contains (name of antibody).''

(3) If tests for unexpected antibodies are positive, Plasma intended for transfusion must be labeled: ''Contains (name of antibody).''

(4) Recovered plasma labels must include:

(i) In lieu of an expiration date, the date of collection of the oldest material in the container.

(ii) For recovered plasma not meeting the requirements for manufacture into licensable products, the statement: ''Not for Use in Products Subject to License Under Section 351 of the Public Health Service Act.''

(iii) The type of anticoagulant with which the product was prepared.

(5) Source Plasma labels must include the following information:

(i) The cautionary statement, as specified in § 606.121(c)(10), must follow the proper name with any appropriate modifiers and attributes and be of similar prominence as the proper name.

(ii) The statement ''Store at -30 °C or colder'': Provided, That where plasma is intended for manufacturing into noninjectable products, this statement may be replaced by a statement of the temperature appropriate for manufacture of the final product to be prepared from the plasma.

(iii) The total volume or weight of plasma and total quantity and type of anticoagulant used.

(iv) When plasma collected from a donor is reactive for a serologic test for syphilis, a statement that the plasma is reactive and must be used only for the manufacturing of positive control reagents for the serologic test for syphilis.

(v) Source Plasma diverted for Source Plasma Salvaged must be relabeled ''Source Plasma Salvaged'' as prescribed in § 640.76 of this chapter. Immediately following the proper name of the product, with any appropriate modifiers and attributes, the labeling must conspicuously state as applicable, ''STORAGE TEMPERATURE EXCEEDED -30 °C'' or ''SHIPPING TEMPERATURE EXCEEDED -15 °C''.

(vi) A statement as to whether the plasma was collected from nonimmunized donors, or from donors in specific collection programs approved by the Director, CBER. In the case of specific collection programs the label must state the defining characteristics of the plasma.

(f) Blood and blood components determined to be unsuitable for transfusion must be prominently labeled: ''NOT FOR TRANSFUSION,'' and the label must state the reason the unit is considered unsuitable. The provision does not apply to blood and blood components intended solely for further manufacturing.

(g) [Reserved]

(h) The following additional information must appear on the label for blood or blood components shipped in an emergency prior to completion of required tests, in accordance with § 610.40(g) of this chapter:

(1) The statement: ''FOR EMERGENCY USE ONLY BY _____.''

(2) Results of any tests prescribed under §§ 610.40 and 640.5(a), (b), or (c) of this chapter completed before shipment.

(3) Indication of any tests prescribed under §§ 610.40 and 640.5(a), (b), or (c) of this chapter not completed before shipment.

(i) The following additional information must appear on the label for blood or blood components intended for autologous transfusion:

(1) Information adequately identifying the patient e.g., name, date of birth, hospital, and identification number.

(2) Date of donation.

(3) The statement: ''AUTOLOGOUS DONOR.''

(4) The ABO and Rh blood group and type, unless exempt under § 606.121(c)(9).

(5) In place of the allogeneic blood group label, each container of blood intended for autologous use and obtained from a donor who fails to meet any of the donor suitability requirements under § 640.3 of this chapter or who is reactive to or positive for one or more tests for evidence of infection due to communicable disease agents must be prominently and permanently labeled: ''FOR AUTOLOGOUS USE ONLY.''

(6) Units of blood originally intended for autologous use, except those labeled as prescribed under paragraph (i)(5) of this section, may be issued for allogeneic transfusion provided the container label complies with all applicable provisions of paragraphs (b) through (e) of this section. In such case, the special label required under paragraphs (i)(1), (i)(2), and (i)(3) of this section must be removed or otherwise obscured.

(j) A tie-tag attached to the container may be used for providing the information required by paragraphs (e)(1)(iii), (e)(2)(ii), and (e)(3), (h), or (i)(1), (i)(2), and (i)(3) of this section.

5. Section 606.122 is amended by revising the introductory paragraph, and paragraphs (e), (f), (m)(2), (m)(3), and (m)(5) to read as follows:

§ 606.122 Instruction circular.

An instruction circular must be available for distribution if the product is intended for transfusion. The instruction circular must provide adequate directions for use, including the following information:

* * * * *

(e) A statement that the product was prepared from blood that was tested and found negative for evidence of infection due to the infectious agents (include the name of each infectious agent for which the blood was tested, including all FDA required tests).

(f) The statement: ''Warning: The risk of communicable disease agents is present. Careful donor selection and available laboratory tests do not eliminate the hazard.''

* * * * *

(m) For Plasma, the instruction circular must contain:

(1) * * *

(2) Instructions to thaw the frozen product at a temperature appropriate for the product.

(3) When applicable, instructions to begin administration of the product within a specified time after thawing.

(4) * * *

(5) A statement that this product has the same risk of transmitting communicable disease agents as Whole Blood; other plasma volume expanders without this risk are available for treating hypovolemia.

* * * * *

PART 610—GENERAL BIOLOGICAL PRODUCTS STANDARDS

6. The authority citation for 21 CFR part 610 continues to read as follows:

Authority: 21 U.S.C. 321, 331, 351, 352, 353, 355, 360, 360c, 360d, 360h, 360i, 371, 372, 374, 381; 42 U.S.C. 216, 262, 263, 263a, 264.

7. Section 610.53 is amended by revising paragraph (c) in the table for

Cryoprecipitated AHF, and Plasma products for the item Fresh Frozen Plasma to read as follows:

§ 610.53 Dating periods for licensed biological products.

* * * * *

(c) * * *

A	B	C	D
Product	Manufacturer's storage period 1 to 5 °C (unless otherwise stated)	Manufacturer's storage period 0 °C or colder (unless otherwise stated)	Dating period after leaving manufacturer's storage when stored at 2 to 8 °C (unless otherwise stated)
* * * * *			
Cryoprecipitated AHF	do	do	24 months from the date of collection of source blood providing labeling recommends storage at -25 °C or colder or 3 months from the date of collection of source blood providing labeling recommends storage between -18 to -25 °C.
* * * * *			
Plasma products 1. Fresh Frozen Plasma	Not applicable	do	24 months from the date of collection of source blood providing labeling recommends storage at -25 °C or colder or 3 months from the date of collection of source blood providing labeling recommends storage between -18 to -25 °C.

* * * * *

PART 640—ADDITIONAL STANDARDS FOR HUMAN BLOOD AND BLOOD PRODUCTS

8. The authority citation for 21 CFR part 640 continues to read as follows:

Authority: 21 U.S.C. 321, 351, 352, 353, 355, 360, 371; 42 U.S.C. 216, 262, 263, 263a, 264.

9. Section 640.34 is amended by revising paragraphs (b) and (g)(2) to read as follows:

§ 640.34 Processing.

(a) * * *

(b) *Fresh Frozen Plasma*. Fresh Frozen Plasma must be prepared from blood collected by uninterrupted venipuncture with minimal damage to and minimal manipulation of the donor's tissue. The plasma must be separated from the red blood cells, and placed in a freezer within 8 hours or within the timeframe specified in the directions for use for the blood collecting, processing, and storage system. The plasma must be stored at -25 °C or colder if the expiration is 24 months; and at -18 to -25 °C if the expiration is 3 months.

* * * * *

(g) * * *

(2) With the exception of Platelet Rich Plasma and Liquid Plasma the final product must be inspected for evidence of thawing or breakage at the time of issuance. The containers need not be stored in a manner that shows evidence of thawing if records of continuous monitoring can establish that the appropriate storage temperature recommended on the labeling for the product was maintained throughout the storage period. If continuous monitoring of the product is not available, the final product must be stored in a manner that will show evidence of thawing and must not be issued if there is any evidence of thawing.

* * * * *

10. Section 640.54 is amended by revising paragraph (a)(3) to read as follows:

§ 640.54 Processing.

(a) * * *

(3) Immediately after separation and freezing of the plasma, the plasma must be stored and maintained at the appropriate storage temperature recommended on the labeling for the product until thawing of the plasma for further processing to remove the Cryoprecipitated AHF.

* * * * *

11. Section 640.69 is amended by revising paragraph (c) to read as follows:

§ 640.69 General requirements.

* * * * *

(c) *Inspection*. Source Plasma intended for further manufacturing into injectable products must be inspected for evidence of thawing at the time of issuance, except that inspection of individual plasma containers need not be made if the records of continuous monitoring of the storage temperature establish that the temperature remained at -30 °C or colder. If there is evidence that the storage temperature has not been maintained at -30 °C or colder, the plasma may be relabeled and issued as provided in § 640.76(a) of this chapter.

* * * * *

§ 640.70 [Removed]

12. Section 640.70 *Labeling* is removed.

§ 640.76 [Amended]

13. Section 640.76 *Products stored or shipped at unacceptable temperatures* is amended as follows:

a. In paragraphs (a)(1) and (a)(2) by removing ''-20 °C'' and adding in its place ''-30 °C'' wherever it appears;

b. In paragraphs (a)(1), (a)(2), and (b) by removing ''shall'' and adding in its place ''must'' wherever it appears;

c. In paragraphs (a)(2) and (b) by removing ''-5 °C'' and adding in its place ''-15 °C'' wherever it appears.

Dated: July 12, 2003.

Jeffrey Shuren,

Assistant Commissioner for Policy.

[FR Doc. 03–19289 Filed 7–29–03; 8:45 am]

BILLING CODE 4160–01–S

DEPARTMENT OF THE TREASURY

Internal Revenue Service

26 CFR Part 1

[REG–152524–02]

RIN–1545–BB38

Guidance Under Section 1502; Amendment of Waiver of Loss Carryovers From Separate Return Limitation Years; Hearing Cancellation

AGENCY: Internal Revenue Service (IRS), Treasury.

ACTION: Cancellation of notice of public hearing on proposed rulemaking.

SUMMARY: This document cancels a public hearing on proposed regulations under section 1502 of the Internal Revenue Code that permit the amendment of certain elections to waive the loss carryovers of an acquired subsidiary.

DATES: The public hearing originally scheduled for August 6, 2003, at 10 a.m., is cancelled.

FOR FURTHER INFORMATION CONTACT: Sonya M. Cruse of the Regulations Unit, Associate Chief Counsel (Procedure and Administration), at (202) 622–4693 (not a toll-free number).

SUPPLEMENTARY INFORMATION: A notice of proposed rulemaking and notice of public hearing that appeared in the **Federal Register** on Wednesday, May 7, 2003, (68 FR 24404), announced that a public hearing was scheduled for August 6, 2003 at 10 a.m., in room 6718, Internal Revenue Service Building, 1111 Constitution Avenue, NW., Washington, DC. The subject of the public hearing is proposed regulations under section 1502 of the Internal Revenue Code.

The public comment period for these regulations expired on July 16, 2003. The notice of proposed rulemaking and notice of public hearing, instructed those interested in testifying at the public hearing to submit a request to speak and an outline of the topics to be addressed. As of Friday, July 25, 2003, no one has requested to speak. Therefore, the public hearing scheduled for August 6, 2003 is cancelled.

LaNita Van Dyke,

Acting Chief, Regulations Unit, Associate Chief Counsel, (Procedure and Administration).

[FR Doc. 03–19365 Filed 7–29–03; 8:45 am]

BILLING CODE 4830–01–P

DEPARTMENT OF THE TREASURY

Internal Revenue Service

26 CFR Part 1

[REG–163974–02]

RIN 1545–BB77

Diversification Requirements for Variable Annuity, Endowment, and Life Insurance Contracts

AGENCY: Internal Revenue Service (IRS), Treasury.

ACTION: Notice of proposed rulemaking.

SUMMARY: This document proposes removing provisions of the Income Tax Regulations that apply a look-through rule to assets of a nonregistered partnership for purposes of satisfying the diversification requirements of section 817(h) of the Internal Revenue Code. The Treasury Department and the IRS believe that removal of these provisions will eliminate any possible confusion regarding the prohibition on ownership of interests by the public in a nonregistered partnership funding a variable contract.

DATES: Written or electronic comments and requests for a public hearing must be received by October 28, 2003.

ADDRESSES: Send submissions to: CC:PA:RU (REG–163974–02), room 5226, Internal Revenue Service, POB 7604, Ben Franklin Station, Washington, DC 20044. Comments may be hand delivered Monday through Friday between the hours of 8 a.m. and 4 p.m. to CC:PA:RU (REG–163974–02), Courier's Desk, Internal Revenue Service, 1111 Constitution Avenue, NW., Washington, DC. Alternatively, taxpayers may submit electronic comments directly to the IRS Internet site at *www.irs.gov/regs*.

FOR FURTHER INFORMATION CONTACT: James Polfer, (202) 622–3970 (not a toll-free number).

SUPPLEMENTARY INFORMATION:

Background

Section 817(d) defines a variable contract as an annuity contract, a life insurance contract, or a contract that provides funding of insurance on retired lives as described in section 807(c)(6). A variable contract must provide for the allocation of all or part of the amounts received under the contract to an account that is segregated from the general asset accounts (a segregated asset account) of the company under State law. In the case of an annuity contract, the amounts paid in, or the amounts paid out, must reflect the investment return and the market value of the segregated asset account. Section 817(d)(3)(A). In the case of a life insurance contract, the amount of the death benefit (or the period of coverage) must be adjusted on the basis of the investment return and the market value of the account. Section 817(d)(3)(B). In the case of a contract for funding of insurance on retired lives, the amounts paid in, or the amounts paid out, must reflect the investment return and the market value of the account. Section 817(d)(3)(C).

Section 817(h)(1) provides that a variable contract based on a segregated asset account shall not be treated as an annuity, endowment, or life insurance contract unless the segregated asset account is adequately diversified in accordance with regulations prescribed by the Secretary. Under section 817(h)(1), if a segregated asset account fails to be adequately diversified for a period, then the contracts supported by that segregated asset account shall not be treated as annuity, endowment, or life insurance contracts for that period and subsequent periods, even if the segregated asset account is adequately diversified in those subsequent periods. Section 1.817–5(c)(1) defines period as a calendar quarter. If a segregated asset account is not adequately diversified, income earned by that segregated asset account is treated as ordinary income received or accrued by the policyholders.[1]

Section 817(h) was enacted by Congress in the Deficit Reduction Act of 1984 (Pub. L. 98–369). Congress enacted the diversification requirements of section 817(h) to ''discourage the use of tax-preferred variable annuity and variable life insurance primarily as investment vehicles.'' H.R. Conf. Rep. No. 98–861, at 1055 (1984). In section 817(h)(1), Congress granted the Secretary broad regulatory authority to develop rules to carry out this intent. Pursuant to this authority, § 1.817–5 sets forth the standards a segregated asset account must meet to be treated as adequately diversified within the meaning of section 817(h).

Section 817(h)(4) provides a look-through rule under which taxpayers do not treat the interest in a regulated investment company (RIC) or trust as a single asset of the segregated asset account but rather apply the diversification tests by taking into account the assets of the RIC or trust. Section 817(h) further provides that the look-through rule applies only if all of the beneficial interests in a RIC or trust

[1] Section 1.817–5(a)(2) provides a mechanism for insurance companies to avoid this result if certain enumerated correction procedures are satisfied.

are held by one or more general or segregated asset accounts of insurance companies (or affiliated companies), or by fund managers (or affiliated companies) in connection with the creation or management of the RIC or trust. ''In authorizing Treasury to prescribe diversification standards, the conferees intend that the standards be designed to deny annuity or life insurance treatment for investments that are publicly available to investors * * * A H.R. Conf. Rep. at 1055.''

Section 1.817–5(f)(1) of the regulations implements the Congressional directive to prescribe diversification standards by providing that if look-through treatment is available, a beneficial interest in a RIC, real estate investment trust, partnership, or trust that is treated under sections 671 through 679 as owned by the grantor or another person (investment company, partnership or trust) will not be treated as a single investment of a segregated asset account for purposes of testing diversification. Instead, a pro rata portion of each asset of the investment company, partnership, or trust will be treated as an asset of the segregated asset account.

Section 1.817–5(f)(2) provides more detailed rules for determining whether look-through treatment is available. Under § 1.817–5(f)(2)(i), the look-through rule applies to any investment company, partnership, or trust if: (A) All the beneficial interests in the investment company, partnership, or trust are held by one or more segregated asset accounts of one or more insurance companies; and (B) public access to such investment company, partnership, or trust is available exclusively through the purchase of a variable contract. Section 1.817–5(f)(iii) provides exceptions to the general ownership limitations of § 1.817–5(f)(2)(i), specifically permitting life insurance company general accounts, managers of the investment company, partnership or trust, pension or retirement plan trustees, and certain individuals whose investment falls into one of two limited classes.

Under § 1.817–5(f)(2)(ii), the look-through rule applies to a partnership interest that is not registered under a Federal or State law regulating the offering or sale of securities. Unlike § 1.817–5(f)(2)(i), satisfaction of the non-registered partnership look-through rule of § 1.817–5(f)(2)(II) is not explicitly conditioned on limiting the ownership of interests in the partnership to certain specified holders.

Under § 1.817–5(f)(2)(iii), the look-through rule applies to a trust that is treated under sections 671 through 679 as owned by the grantor or another person if substantially all of the assets of the trust are represented by Treasury securities.

Section 1.817–5(g) provides examples of the application of the look-through rules of § 1.817–5(f). Example (3) of § 1.817–5(g) provides an example of the application of the § 1.817–5(f)(2)(ii) non-registered partnership look-through rule.

Explanation of Provisions

This document contains proposed amendments to 26 CFR part 1 under section 817(h). These proposed amendments would remove § 1.817–5(f)(2)(ii), which requires taxpayers to look through an interest in a nonregistered partnership, as defined in § 1.817–5(f)(2)(ii), to determine whether a segregated asset account supporting a variable contract is adequately diversified within the meaning of section 817(h) and § 1.817–5. In addition, the proposed regulations would conform the other provisions of § 1.817–5 to the removal of § 1.817–5(f)(2)(ii), and would remove Example (3) of § 1.817–5(g).

The application of § 1.817–5(f)(2)(i) to interests in nonregistered partnerships will be unchanged by the removal of § 1.817–5(f)(2)(ii). Thus, look through treatment will be available for interests in a nonregistered partnership if: (A) All the beneficial interests in the nonregistered partnership (other than those described in § 1.817-5(f)(3)) are held by one or more segregated asset accounts of one or more insurance companies; and (B) public access to such nonregistered partnership is available exclusively (except as otherwise permitted in § 1.817–5(f)(3)) through the purchase of a variable contract.

Reasons for Change

The Treasury Department and the IRS are concerned that § 1.817–5(f)(2)(ii) is not consistent with Congressional intent because it is not explicitly subject to the public availability limitation of section 817(h). The Treasury Department and the IRS believe that removal of § 1.817–5(f)(2)(ii) will eliminate any possible confusion regarding the prohibition on ownership of interests by the public in a non-registered partnership funding a variable contract.

In addition, the Treasury Department and the IRS understand that certain taxpayers are purchasing contracts invested in partnerships that rely on the nonregistered partnership rule of § 1.817–5(f)(2)(ii) to satisfy the diversification requirements of section 817(h). The Treasury Department and the IRS are concerned that these contracts are funded by interests in partnerships that are also available to certain limited classes of investors, specifically individuals that are ''qualified purchasers'' within the meaning of 15 U.S.C. 80a–2(a)(51) or ''accredited investors'' as defined in Regulation D of the Securities Act of 1933.[2] The Treasury Department and the IRS believe that Congress intended to treat qualified purchasers and accredited investors as part of the general public when determining whether an investment is available for the purchase by the general public. Elimination of § 1.817–5(f)(2)(ii) will limit access to interests in non-registered partnerships to the same holders that are permitted under § 1.817–5(f)(2)(i), which does not include either qualified investors or accredited investors.

Proposed Effective Date

The Treasury Department and the IRS intend revocation of § 1.817–5(f)(2)(ii) and Example (3) of § 1.817–5(g) to be effective on the date the final regulations are published in the **Federal Register**. The revocation will be effective for all investments in nonregistered partnerships, including investments made prior to the effective date of the revocation that relied on the look-through rule of § 1.817–5(f)(2)(ii) to satisfy the diversification requirements of section 817(h) and the regulations and do not meet the requirements of § 1.817–5(f)(2)(i). However, arrangements in existence on the effective date of the revocation of § 1.817–5(f)(2)(ii) will be considered to be adequately diversified if: (i) Those arrangements were adequately diversified within the meaning of section 817(h) prior to the revocation of § 1.817–5(f)(2)(ii) and (ii) by the end of the last day of the second calendar quarter ending after the effective date of

[2] The Treasury Department and the IRS understand that many of the partnership interests that are available under these arrangements are interests in partnerships that operate as hedge funds, often established and operated in foreign jurisdictions. In many cases, interests in these partnerships are available for purchase directly by the general public as well as through the purchase of a variable contract. Taxpayers that purchase a variable annuity or life insurance contract are indirectly investing in partnership interests that are available for direct investment by the general public. By indirectly investing in these partnership interests through the purchase of a variable contract taxpayers defer tax on partnership earnings that might otherwise be currently taxable. The Treasury Department and the IRS believe that these arrangements (often marketed as ''insurance wrappers'') are the type of overly investment oriented insurance and annuity arrangements that Congress sought to prevent when it enacted the diversification rules of section 817(h).

the regulation, the arrangements are brought into compliance with the final regulations.

Special Analyses

It has been determined that this notice of proposed rulemaking is not a significant regulatory action as defined in Executive Order 12866. Therefore, a regulatory assessment is not required. It also has been determined that section 553(b) of the Administrative Procedure Act (5 U.S.C. chapter 5) does not apply to these regulations, and because the regulations do not impose a collection of information on small entities, the Regulatory Flexibility Act (5 U.S.C. chapter 6) does not apply. Pursuant to section 7805(f) of the Internal Revenue Code, the notice of proposed rulemaking will be submitted to the Chief Counsel for Advocacy of the Small Business Administration for comment on their impact on small business.

Comments and Request for a Public Hearing

Before these proposed regulations are adopted as final regulations, consideration will be given to any written comments (a signed original and eight (8) copies) or electronic comments that are timely submitted to the IRS. The Treasury Department and the IRS specifically request comments on the clarity of the proposed rule and how it may be made easier to understand. All comments will be available for public inspection and copying. A public hearing may be scheduled if requested in writing by any person that timely submits written or electronic comments. If a public hearing is scheduled, notice of the date, time, and place for the hearing will be published in the **Federal Register**.

The Treasury Department and the IRS specifically request comments on: (1) Whether revocation of § 1.817–5(f)(2)(ii) necessitates other changes to the look-through rules of § 1.817–5(f), in particular whether the list of holders permitted by § 1.817–5(f)(3) should be amended or expanded, and whether a non-pro-rata distribution of the investment returns of a segregated asset account should be permitted to take account of certain bonus payments to investment managers commonly referred to as incentive payments, (2) whether § 1.817–5 should be updated to take account of changes to variable contracts since the final regulations were published in 1986, and (3) whether regulations are needed to address when a holder of a variable contract will be treated as the owner of assets held in a segregated asset account and, therefore, required to include earnings on those assets in income.[3]

Drafting Information

The principal author of these proposed regulations is James Polfer, Office of the Associate Chief Counsel (Financial Institutions and Products), Office of Chief Counsel, Internal Revenue Service. However, personnel from other offices of the Treasury Department and the IRS participated in their development.

List of Subjects in 26 CFR Part 1

Income Taxes, Reporting and recordkeeping requirements.

Proposed Amendment to the Regulations

Accordingly, 26 CFR part 1 is proposed to be amended as follows:

PART 1—INCOME TAX

1. The authority citation for part 1 is amended by adding an entry in numerical order to read as follows:

Section 1.817–5 also issued under 26 U.S.C. 817(h). * * *

Authority: 26 U.S.C. 7805 * * *

§ 1.817–5 [Amended]

2. Section 1.817–5 is amended as follows:

1. Paragraphs (f)(2)(ii) and (g) *Example 3* are removed.

2. Paragraph (f)(2)(iii) is redesignated as paragraph (f)(2)(ii).

3. Paragraph (g) *Example 4* is redesignated as paragraph (g) *Example 3*.

Robert E. Wenzel,

Deputy Commissioner (Services and Enforcement).

[FR Doc. 03–19367 Filed 7–29–03; 8:45 am]

BILLING CODE 4830–01–P

[3] The Treasury Department and the IRS have issued a number of revenue rulings that provide guidance for determining whether the holder of a variable contract will be treated as the owner of assets held by a segregated asset account by virtue of the control the contract holder has over those assets. *See* Rev. Rul. 2003–92, 2003–33 I.R.B. __ (August 18, 2003); Rev. Rul. 2003–91, 2003–33 I.R.B. __ (August 18, 2003); Rev. Rul. 82–54, 1982–1 C.B. 11; Rev. Rul. 81–225, 1981–2 C.B. 12; Rev. Rul. 80–274, 1980–2 C.B. 27; Rev. Rul. 77–85, 1977–1 C.B. 12. *See also Christoffersen* v. *U.S.*, 749 F.2d 513 (8th Cir. 1984), *rev'g* 578 F. Supp. 398 (N.D. Iowa 1984). These rulings apply general concepts of ownership that have developed in case law to conclude that a contract holder was the owner of assets held in the account that supported the contract holder's annuity contract, and was therefore subject to current taxation on the earnings on those assets.

DEPARTMENT OF HOMELAND SECURITY

Coast Guard

33 CFR Part 151

[USCG–2003–14273]

RIN 1625–AA52 [Formerly RIN 2115–AG52]

Mandatory Ballast Water Management Program for U.S. Waters

AGENCY: Coast Guard, DHS.

ACTION: Notice of proposed rulemaking.

SUMMARY: The unintentional introduction of nonindigenous species (NIS) into U.S. waters via the discharge of vessels' ballast water has had significant impacts on the nation's marine and freshwater resources, biological diversity, and coastal infrastructures. To address this continued threat, and to comply with the Nonindigenous Aquatic Nuisance Prevention and Control Act of 1990, and the National Invasive Species Act of 1996, the Coast Guard proposes mandatory ballast water management practices for all vessels equipped with ballast tanks bound for ports or places within the U.S. and/or entering U.S. waters. The Great Lakes ballast water management program would remain unchanged. This proposed rulemaking would increase the Coast Guard's ability to protect U.S. waters against the introduction of NIS via ballast water discharges.

DATES: Comments and related material must reach the Docket Management Facility on or before October 28, 2003.

ADDRESSES: To make sure that your comments and related material are not entered more than once in the docket, please submit them by only one of the following means:

(1) By mail to the Docket Management Facility (USCG–2003–14273), U.S. Department of Transportation, room PL–401, 400 Seventh Street SW., Washington, DC 20590–0001.

(2) By delivery to room PL–401 on the Plaza level of the Nassif Building, 400 Seventh Street SW., Washington, DC, between 9 a.m. and 5 p.m., Monday through Friday, except Federal holidays. The telephone number is 202–366–9329.

(3) By fax to the Docket Management Facility at 202–493–2251.

(4) Electronically through the Web site for the Docket Management System at *http://dms.dot.gov*.

You must also mail comments on collection of information to the Office of Information and Regulatory Affairs, Office of Management and Budget, 725

17th Street NW., Washington, DC 20503, ATTN: Desk Officer, United States Coast Guard.

The Docket Management Facility maintains the public docket for this proposed rulemaking. Comments and material received from the public, as well as documents mentioned in this preamble as being available in the docket, will become part of this docket and will be available for inspection or copying at room PL–401 on the Plaza level of the Nassif Building, 400 Seventh Street SW., Washington, DC, between 9 a.m. and 5 p.m., Monday through Friday, except Federal holidays. You may also find this docket on the Internet at *http://dms.dot.gov.*

Anyone is able to search the electronic form of all comments received into any of our dockets by the name of the individual submitting the comment (or signing the comment, if submitted on behalf of an association, business, labor union, *etc.*). You may review Department of Transportation's complete Privacy Act Statement in the **Federal Register** published on April 11, 2000 (Volume 65, Number 70; Pages 19477–78) or you may visit *http://dms.dot.gov*.

FOR FURTHER INFORMATION CONTACT: If you have questions on this proposed rulemaking, call Mr. Bivan Patnaik, Environmental Standards Division, Coast Guard, telephone 202–267–1744, e-mail: *bpatnaik@comdt.uscg.mil.* If you have questions on viewing or submitting material to the docket, call Dorothy Beard, Chief, Dockets, Department of Transportation, telephone 202–366–5149.

SUPPLEMENTARY INFORMATION:

Request for Comments

We encourage you to participate in this proposed rulemaking by submitting comments and related material. If you do so, please include your name and address, identify the docket number for this proposed rulemaking (USCG–2003–14273), indicate the specific section of this document to which each comment applies, and give the reason for each comment. You may submit your comments and material by mail, hand delivery, fax, or electronic means to the Docket Management Facility at the address under **ADDRESSES**; but please submit your comments and material by only one means. If you submit them by mail or hand delivery, submit them in an unbound format, no larger than 8½ by 11 inches, suitable for copying and electronic filing. If you submit them by mail and would like to know that they reached the Facility, please enclose a stamped, self-addressed postcard or envelope. We will consider all comments and material received during the comment period. We may change this proposed rulemaking in view of them.

Public Meeting

We do not plan to hold a public meeting. But you may submit a request for one to the Docket Management Facility at the address under **ADDRESSES** explaining why one would be beneficial. If we determine that one would aid this proposed rulemaking, we will hold one at a time and place announced by a later notice in the **Federal Register**.

Legislative and Regulatory History

The Nonindigenous Aquatic Nuisance Prevention and Control Act of 1990 (NANPCA) [Pub. L. 101–6461], enacted by Congress on November 29, 1990, established the Coast Guard's regulatory jurisdiction over ballast water management. To fulfill the directives of NANPCA, the Coast Guard published a final rule on April 8, 1993, entitled ''Ballast Water Management for Vessels Entering the Great Lakes'' in the **Federal Register** (58 FR 18330). This rulemaking established mandatory ballast water management procedures for vessels entering the Great Lakes in 33 CFR part 151, subpart C.

A subsequent final rule entitled, ''Ballast Water Management for Vessels Entering the Hudson River'', was published on December 30, 1994 in the **Federal Register** (59 FR 67632), which amended 33 CFR part 151 to extend the ballast water management requirements into portions of the Hudson River.

The National Invasive Species Act (NISA) [Pub. L. 104–3321] enacted by Congress on October 26, 1996, reauthorized and amended NANPCA. NISA reemphasized the significant role of ships' ballast water in the introduction and spread of NIS. NISA authorized the development of a voluntary national ballast water management program, and mandated the submission of ballast water management (BWM) reports without penalty provisions. The Coast Guard published an interim rule in the **Federal Register** on May 17, 1999, on this voluntary program entitled, ''Implementation of the National Invasive Species Act of 1996 (NISA)'' (64 FR 26672), and finalized the rule in the **Federal Register** (66 FR 5838) on November 21, 2001.

NISA also instructed the Secretary of Transportation (Secretary) to submit a Report to Congress evaluating the effectiveness of the voluntary BWM program. Congress anticipated that the Secretary might determine that either compliance with the voluntary guidelines was inadequate, or the rate of reporting was too low to allow for a valid assessment of compliance. In either case, Congress stipulated the development of additional regulations to make the voluntary guidelines a mandatory BWM program. The Secretary's report to Congress, signed June 3, 2002, concluded that compliance with the voluntary guidelines, found in 33 CFR part 151, subpart D, was insufficient to allow for an accurate assessment of the voluntary BWM regime. Accordingly, the Secretary stated his intention to make the voluntary BWM guidelines mandatory. (A copy of this Report to Congress can be found in the U.S. Coast Guard docket # 2002–13147 at *http://dms.dot.gov.*)

Related Projects

The Coast Guard is working on three projects related to addressing the NIS problems in U.S. waters.

The first project addresses the Coast Guard's ability to impose penalty provisions under NISA for non-submission of Ballast Water Management Reports, the Coast Guard published a notice of proposed rulemaking on January 6, 2003, entitled ''Penalties for Non-Submission of Ballast Water Management Reports'' in the **Federal Register** (68 FR 523), which would implement penalties for failure to comply with the mandatory requirements found in 33 CFR part 151 and widen the applicability of the reporting and recordkeeping requirements to all vessels bound for ports or places within the U.S., with minor exceptions. Although the current mandatory portions of 33 CFR part 151 are reporting and recordkeeping, the penalty provisions will extend to mandatory ballast water management practices once this rulemaking becomes final.

The second project involves setting a standard to evaluate the discharge from ballast water treatment systems. A notice entitled, ''Potential Approaches to Setting Ballast Water Treatment Standards'' (66 FR 21807), published May 1, 2001, requested comments on approaches to setting, implementing, and enforcing ballast water standards. It was followed by an advance notice of proposed rulemaking (ANPRM) entitled ''Standards for Living Organisms in Ships' Ballast Water Discharged in U.S. Waters'' (67 FR 9632), published on March 4, 2002. This ANPRM sought comments on the development of a ballast water treatment goal. The comment period on the ANPRM closed

on June 3, 2002, and the Coast Guard is analyzing the comments and continuing to evaluate options for a standard.

The third project involves encouraging the installation and testing of ballast water treatment technologies on board vessels. A notice, entitled ''Approval for Experimental Shipboard Installations of Ballast Water Treatment Systems'' (66 FR 282131), published on May 22, 2001, requested comments on a possible means of providing incentives for vessel owners to assist in the development and testing of ballast water treatment technologies. The Coast Guard is currently working on an interim rule to establish a program through which vessel owners can apply for approval of experimental ballast water treatment systems installed and tested on board their operating vessels. This rulemaking will facilitate the development of effective ballast water treatment technology, thus creating more options for vessels seeking alternatives to ballast water exchange.

Discussion of Proposed Rulemaking

As directed by NISA and as a result of the Secretary of Transportation's Report to Congress in June 2002, the Coast Guard has determined that the voluntary BWM program is inadequate. Therefore, the Coast Guard is proposing to convert the voluntary BWM program into a mandatory BWM program. This proposed rulemaking would increase the Coast Guard's ability to protect against introductions of new NIS via ballast water discharges.

On March 1, 2003, the Coast Guard became a component of the Department of Homeland Security. As a result, the Secretary of the Department of Homeland Security assumed all duties once bestowed on the Secretary of the Department of Transportation with respect to this proposed rulemaking. The Secretary of Homeland Security concurs with the Coast Guard's proposed rule regarding the mandatory ballast water program.

This proposed rulemaking would revise 33 CFR part 151 to implement the requirements of NISA. Specifically, subpart D of 33 CFR part 151 would be revised to require a mandatory ballast water management program for all vessels equipped with ballast water tanks entering U.S. waters. The mandatory ballast water management requirements for vessels entering into the Great Lakes and Hudson River from outside the U.S. Exclusive Economic Zone (EEZ) would remain unchanged.

This mandatory program would require all vessels equipped with ballast water tanks entering U.S. waters after operating beyond the EEZ to employ at least one of the following ballast water management practices:

(a) Prior to discharging ballast water in U.S. waters, perform complete ballast water exchange in an area no less than 200 nautical miles from any shore.

(b) Retain ballast water onboard the vessel.

(c) Prior to the vessel entering U.S. waters, use an alternative environmentally sound method of ballast water management that has been approved by the Coast Guard.

(d) Discharge ballast water to an approved reception facility.

Although, the national mandatory BWM program provides vessels with the option of using one of four BWM practices, ballast water exchange is likely to be the most used practice. This is due to—

- Some vessels engaged in trade are unlikely to hold their ballast after arriving here from outside the EEZ, as this would mean they would not be able to load their cargo;
- Alternative environmentally sound methods of ballast water management are still being developed, and would likely be of limited availability in the near future; and
- The number of on-shore reception facilities is limited, and none are approved for the removal of NIS. This is likely to remain so.

Therefore, under this proposed rulemaking, the BWM practice of conducting mid-ocean ballast water exchange prior to discharging ballast in U.S. waters would be the practice most used by the majority of vessels.

A vessel would not be required to deviate from its voyage, or delay the voyage, in order to conduct a ballast water exchange. A vessel that cannot practicably meet the requirements of paragraphs (a)–(d) due to a voyage that does not take it into waters 200 nautical miles or greater from any shore for a sufficient length of time, and/or due to safety concerns, would not be prohibited from discharging its ballast water in areas other than the Great Lakes and the Hudson River. However, the vessel must discharge only the amount of ballast water operationally necessary. An entry must be made in the ballast water records supporting the reasons that the vessel could not comply with the regulatory requirements. Ballast water records must be made available to the local Captain of the Port upon request.

For example, we would not expect a passenger vessel traveling from the Bahamas to Fort Lauderdale, FL (approximately 200 miles) to travel an additional 200 miles and delay their voyage by 24 hours to conduct a ballast water exchange. This passenger vessel would discharge their ballast water at port, and make an entry in the ballast water report form stating the reasons for not complying with paragraphs (a)–(d).

The proposed rule also revises the criteria for a mid-ocean exchange by removing the constraint of exchanging ballast water in waters more than 2000 meters deep. Currently, there is not consensus on a water-depth criterion for exchange. For example, Australian legislation has a depth requirement of 200 meters, and Israel's ballast water exchange requirement has no depth restriction, while the current draft of the IMO Convention for the Control and Management of Ship's Ballast Water and Sediments has a criterion of 200 meters. At this time we believe defining mid-ocean ballast water exchange as taking place not less than 200 miles from shore allows more vessels to conduct exchange and simplifies enforceability. We welcome public comment on this proposed change in the Coast Guard program.

Failure to maintain a BWM plan onboard the vessel or to make the required ballast water reports available will result in penalties. Also, failure to employ at least one of the BWM practices outlined above would result in a penalty, unless the vessel is exempt due to safety or voyage constraints, or specifically exempted by regulation.

A BWM plan should be specific to each vessel, and should fulfill 2 purposes: (1) Show that there is a BWM strategy for the vessel; and (2) allow any master, or other ship's officer as appropriate, serving on that vessel to understand and follow the BWM strategy for that vessel. The International Maritime Organization (IMO) has issued guidelines on the content of BWM plans in IMO Resolution A.868(20) Annex 1, Chapter 7. Any plan meeting these IMO guidelines would meet the regulatory requirement laid out in § 151.2035(a)(7). This Resolution is available on the IMO's Global Ballast Water Management Programme Web site [*http://globallast.imo.org*]. For your reference, we have also placed a copy of the IMO guidelines in the docket for this proposed rulemaking at the location listed above under **ADDRESSES.**

The Coast Guard recognizes that there are two currently feasible methods of conducting an exchange:

- *An empty/refill exchange.* The tank or a pair of tanks are pumped down to the point where the pumps lose suction, and then the tank is pumped back up to the original levels.
- *A flow-through exchange.* Mid-ocean water is pumped into a full tank

while the existing coastal or fresh water is pumped or pushed out through another opening. As defined by the Coast Guard, a volume of water equal to three times the ballast tank capacity must be pumped for a flow-through exchange.

Regulatory Evaluation

This proposed rule is a ''significant regulatory action'' under section 3(f) of Executive Order 12866, Regulatory Planning and Review, and does require an assessment of potential costs and benefits under section 6(a)(3) of that Order. The Office of Management and Budget has reviewed it under that Order. It is ''significant'' under the regulatory policies and procedures of the Department of Homeland Security (DHS). A full Regulatory Evaluation is available in the public docket for this rulemaking.

This Regulatory Evaluation identified the vessel population affected by the proposed rule and provides cost and benefit models for the current principle option of ballast water management (BWM) provided for under the rule-ballast water exchange. BWM is applicable for any vessel equipped with ballast tanks entering U.S. waters from outside the EEZ. The vessel population was categorized by vessel type under the assumption that vessels in different cargo services and of different sizes likely manage ballast water in different ways. We estimated that approximately 7,420 vessels will be affected and approximately 11,500 ballast water exchanges will be performed annually. Annual costs totaled approximately $15.8 million. The 10-year present value cost for this rule is $116.7 million.

The benefit assessment expanded on the analysis conducted for costs by focusing on the probability of viable organisms being introduced into U.S. waters through ballast discharge, both before the proposed rule and following the implementation of mandatory BWM. A probability of a reduction in the number of invasions of NIS was calculated using data on voyages, vessel types, ballast water volumes, and exchange effectiveness, as well as order-of-magnitude assumptions about the probabilities of inoculations, introductions, and invasions resulting from ballast water discharges. The calculations indicated the proposed rule may result in avoiding approximately 10 inoculations that result in invasions for each year the rule is in effect. While there is considerable uncertainty in these calculations and the order-of-magnitude assumptions (referred to as the ''rule of 10s'' in the Regulatory Evaluation) are admittedly an oversimplification of a complex problem, we believe their simplicity and transparency are compelling. To date, there is no national estimate of the rate of aquatic NIS, and we cannot compare our baseline invasion estimate to other, more limited estimates regarding invasions. Our findings are broadly consistent, however, with other estimates of the rate of NIS invasions. One study finds that in the San Francisco Bay and Delta, invasions have increased from one new species every 55 weeks (1851–1960) to one new species every 14 weeks (1961–1995) (Cohen and Carlton, 1998). Another study posits that invasion rates may have increased in the San Francisco Bay and the Great Lakes over the past several decades (Mills, *et al.*, 1993). Finally, some researchers believe that the increase of initial invasions is best described by an exponential function (Ruiz, *et al.*, 2000). Using our simple methodology, we found that an invasion occurs somewhere in the United States about twice every 3 weeks.

There is considerable difficulty in estimating monetized damages resulting from NIS invasions. Some species impose significant, long-term damages on marine industries and infrastructure. Other species may create subtle disturbances in ecosystems that are difficult to quantify. Still others may be relatively benign. There have been attempts to estimate monetized damages for a few species, most notably the zebra mussel. One study estimated costs to Great Lakes water users, mostly due to fouling of intake structures, of $120 million over the time period 1989 to 1994 (Hushak, 1996). Another estimated cumulative zebra mussel impacts of $750 million to $1 billion over the time period 1989 to 2000 (Carlton, 2001). Other species for which monetized damage estimates have been developed include the Asian clam ($1 billion per year, OTA, 1993) and European green crab ($44 million per year, CRS, 1999). Eight Federal agencies that sit on the Invasive Species Council collectively spent $514 million in 1999 and $631 million in 2000 for the control and management of NIS (GAO, 2000).

We have not reviewed the methodologies used to produce these estimates in detail, though all of them (except expenditures by Federal agencies) involve considerable uncertainty. They are indicative, however, of the magnitude of damages that may result from particularly destructive invasions. It is likely, however, that most invasions would result in considerably lower damages than the numbers reported in these studies. Because of the lack of data on damages potentially associated with any but the most destructive invasions, we have not tried to monetize the benefits of the proposed rule. If the proposed rule resulted in avoiding even one invasion of this magnitude over the course of several decades, however, the benefits of the rule would most likely justify the costs. The Coast Guard requests comment on its benefits estimation methodology and on possible approaches for monetizing benefits associated with avoiding future invasions.

Small Entities

Of the affected population of all vessels arriving at U.S ports, we estimate that 21 vessels of the 171 U.S. flag vessels, are owned by 10 small businesses. Approximately 35 large companies own the remaining 150 U.S. flagged vessels. We estimate all vessels will choose the alternative of conducting a mid-ocean ballast water exchange. The cost of complying with the proposed rule is the cost of exchanges performed by the vessel added to the cost of additional maintenance required for the ballast water pumping system. The cost per exchange is a function of vessel type. Each vessel's costs will be a function of the cost of exchange for that vessel type multiplied by the number of trips into U.S. waters from outside the U.S. EEZ. Thus the annual impact on the revenue for a small business will vary with the number of entries the vessel makes from outside the U.S. EEZ. In order to estimate the upper bound of that impact, we calculated the cost of exchange for the maximum number of exchanges possible for the years 1999 and 2000. We then assumed that weather conditions and transit tracks allowed exchanges for all of these entries. For the annual cost of the rule, the number of vessels owned by each small business is multiplied by the number of exchanges performed, and the resulting product is then multiplied by the cost of exchange for the particular vessel type, and added to the maintenance cost of 10 percent of the capital cost of the ballast pump. Of the 10 small businesses that own vessels affected by the rule, we found revenue for 9. For the remaining company where no revenue information was available, we assumed revenue of $1 million for the purposes of the analysis. Table 1 gives the effect of the rule on the average annual revenues for the small business affected. For more detailed information, refer to the Regulatory Evaluation in the docket.

TABLE 1.—EFFECT OF BWM ON AVERAGE ANNUAL REVENUE FOR SMALL BUSINESS ENTITIES OWNING U.S.-FLAGGED VESSELS

Percent of annual revenue that is BWM rule cost	Total small entities per impact category
0–3	8
3–5	2
> 5	0
Total	10

Assistance for Small Entities

Under section 213(a) of the Small Business Regulatory Enforcement Fairness Act of 1996 (Pub. L. 104–121), we want to assist small entities in understanding this proposed rule so that they can better evaluate its effects on them and participate in the rulemaking. If the rule would affect your small business, organization, or governmental jurisdiction and you have questions concerning its provisions or options for compliance, please consult Mr. Bivan Patnaik, G–MSO–4, Coast Guard, telephone 202–267–1744, email: *Bpatnaik@comdt.uscg.mil.*

Small businesses may send comments on the actions of Federal employees who enforce, or otherwise determine compliance with, Federal regulations to the Small Business and Agriculture Regulatory Enforcement Ombudsman and the Regional Small Business Regulatory Fairness Boards. The Ombudsman evaluates these actions annually and rates each agency's responsiveness to small business. If you wish to comment on actions by employees of the Coast Guard, call 1–888–REG–FAIR (1–888–734–3247).

Collection of Information

This proposed rule would call for a collection of information under the Paperwork Reduction Act of 1995 (44 U.S.C. 3501–3520). As defined in 5 CFR 1320.3(c), ''collection of information'' comprises reporting, recordkeeping, monitoring, posting, labeling, and other, similar actions. The title and description of the information collections, a description of those who must collect the information, and an estimate of the total annual burden follow. The estimate covers the time for reviewing instructions, searching existing sources of data, gathering and maintaining the data needed, and completing and reviewing the collection.

This proposed rule affects an existing OMB approved Collection of Information (Ballast Water Management for Vessels with Ballast Tanks Entering U.S. Waters). The revised Collection of Information is as follows:

Title: Ballast Water Management for Vessels with Ballast Tanks Entering U.S. Waters.

OMB Control Number: 1625–0069 [Formerly 2115–0598.]

Summary of the Collection of Information: This rule contains collection of information requirements for 33 CFR 151 subpart D.

Need for Information: For the Coast Guard to protect U.S. waters against the introduction of nonindigenous species.

Proposed Use of Information: For the Coast Guard to verify increased ability to protect against introductions of new nonindigenous species.

Description of the Respondents: All vessels equipped with ballast water tanks entering U.S. waters.

Number of Respondents: The existing OMB-approved collection number of responses is 50,000 arrivals made by 7,420 vessels (respondents). This rule will increase the information to include a ballast water management plan for each vessel, but does not increase the number of respondents. Thus, the total number of respondents is 7,420.

Frequency of Response: The existing OMB-approved collection annual number of responses is 50,000 (responses are arrivals at U.S. ports). The ongoing Penalties for Non-Submission of Ballast Water Management Reports rulemaking [USCG–2002–13147] would increase the number by 20,000 responses. This rule will increase the number by 7,420 responses in the first year of the rule to account for every vessel developing a ballast water management plan. In subsequent years, this rule will not change the number of responses. Thus, in the first year of this rule there will be a total of 77,420 (50,000 + 20,000 + 7,420) responses, and in subsequent years the total will be 70,000 (50,000 + 20,000) responses.

Burden of Response: The existing OMB-approved collection burden of response is 40 minutes (0.666 hours) for each arrival. For each vessel, this rule will have a first-year (one-time) burden of response of 8 hours to write the BWM plan.

Estimate of Total Annual Burden: The existing OMB-approved burden is 33,500 hours. The ongoing Penalties for Non-Submission of Ballast Water Management Reports rulemaking will increase the annual burden by 13,333 hours. This rule will increase the total first year burden by 8 hours per vessel, or 59,360 hours, to a total of 106,193 hours. This rule does not affect the annual burden for subsequent years, and the total annual burden will be 46,833 hours.

Federalism

We have analyzed this proposed rulemaking under Executive Order 13132. The Aquatic Nuisance Prevention and Control Act contains a ''savings provision'' that saves to the states their authority to ''adopt or enforce control measures for aquatic nuisance species, [and nothing in the Act would] diminish or affect the jurisdiction of any States over species of fish and wildlife.'' 16 U.S.C. 4725. It also requires that ''all actions taken by Federal agencies in implementing the provisions of [the Act] be consistent with all applicable Federal, State and local environmental laws.'' Thus, the congressional mandate is clearly for a Federal-State cooperative regime in combating the introduction of aquatic nuisance species into U.S. waters from ships' ballast tanks. This makes it unlikely that preemption, which would necessitate consultation with the States under Executive Order 13132, would occur. If, at some later point in the rulemaking process we determine that preemption may become an issue, we will develop a plan for consultation with affected states/localities.

Unfunded Mandates Reform Act

The Unfunded Mandates Reform Act of 1995 (2 U.S.C. 1531–1538) requires Federal agencies to assess the effects of their discretionary regulatory actions. In particular, the Act addresses actions that may result in the expenditure by a State, local, or tribal government, in the aggregate, or by the private sector of $100,000,000 or more in any one year. Though this proposed rule would not result in such an expenditure, we do discuss the effects of this rule elsewhere in this preamble.

Taking of Private Property

This proposed rulemaking would not effect a taking of private property or otherwise have taking implications under Executive Order 12630, Governmental Actions and Interference with Constitutionally Protected Property Rights.

Civil Justice Reform

This proposed rulemaking meets applicable standards in sections 3(a) and 3(b)(2) of Executive Order 12988, Civil Justice Reform, to minimize litigation, eliminate ambiguity, and reduce burden.

Protection of Children

We have analyzed this proposed rulemaking under Executive Order

13045, Protection of Children from Environmental Health Risks and Safety Risks. This proposed rule would not create an environmental risk to health or risk to safety that might disproportionately affect children.

Indian Tribal Governments

This proposed rulemaking does not have tribal implications under Executive Order 13175, Consultation and Coordination with Indian Tribal Governments, because it would not have a substantial direct effect on one or more Indian tribes, on the relationship between the Federal Government and Indian tribes, or on the distribution of power and responsibilities between the Federal Government and Indian tribes.

Energy Effects

We have analyzed this proposed rulemaking under Executive Order 13211, Actions Concerning Regulations That Significantly Affect Energy Supply, Distribution, or Use. We have determined that it is not a ''significant energy action'' under that order. Although it is a ''significant regulatory action'' under Executive Order 12866, it is not likely to have a significant adverse effect on the supply, distribution, or use of energy. It has not been designated by the Administrator of the Office of Information and Regulatory Affairs as a significant energy action. Therefore, it does not require a Statement of Energy Effects under Executive Order 13211.

Environment

The Coast Guard considered the environmental impact of this proposed rulemaking and concluded that preparation of a Programmatic Environmental Assessment (PEA) is necessary. A draft PEA has been completed. For more detailed information, refer to the draft PEA in the docket.

This PEA is considered necessary because the proposed rulemaking would require vessels with ballast tanks entering U.S. ports around the country, subject to conditions discussed above, to have completed one of the mandatory BWM practices. Although the national mandatory BWM program provides vessels with ballast tanks the option of using one of four BWM practices, ballast water exchange is likely to be the most used practice for reasons discussed earlier. However, this PEA is necessary to ensure the potential environmental effects of the four BWM practices are considered.

List of Subjects in 33 CFR Part 151

Administrative practice and procedure, Oil pollution, Penalties, Reporting and recordkeeping requirements, Water pollution control, Ballast water management.

For the reasons discussed in the preamble, the Coast Guard proposes to amend 33 CFR part 151 as follows:

PART 151—VESSELS CARRYING OIL, NOXIOUS LIQUID SUBSTANCES, GARBAGE, MUNICIPAL OR COMMERCIAL WASTE, AND BALLAST WATER

Subpart D—Ballast Water Management for Control of Nonindigenous Species in Waters of the United States

1. The authority citation for subpart D is revised to read as follows:

Authority: 16 U.S.C. 4711; Department of Homeland Security Delegation No. 0170.

§ 151.2010 [Revised]

2. Revise § 151.2010(d) by removing the phrase ''and in waters more than 2,000 meters (6,560 feet, 1,093 fathoms) deep''.

3. Revise § 151.2035, the section heading and the introductory text in paragraph (a), and paragraphs (a)(7), and (b) to read as follows:

§ 151.2035 What are the required ballast water management practices for my vessel?

(a) Masters, owners, operators, or persons-in-charge of all vessels equipped with ballast water tanks that operate in the waters of the United States must:

* * * * *

(7) Maintain a ballast water management plan that has been developed specifically for the vessel that will allow any ship's officer to understand and follow the vessels ballast water management strategy.

* * * * *

(b) In addition to the provisions of paragraph (a) of this section, if the vessel carries ballast water that was taken on in areas less than 200 nautical miles from any shore into the waters of the United States after operating beyond the Exclusive Economic Zone, you (the master, operator, or person-in-charge of a vessel) must employ at least one of the following ballast water management practices:

(1) Perform complete ballast water exchange in an area no less than 200 nautical miles from any shore prior to discharging ballast water in United States waters;

(2) Retain ballast water onboard the vessel;

(3) Prior to the vessel entering United States waters, use an alternative environmentally sound method of ballast water management that has been approved by the Coast Guard; or

(4) Discharge ballast water to an approved reception facility.

4. Add § 151.2036 to read as follows:

§ 151.2036 If my voyage does not take me into waters 200 nautical miles or greater from any shore must I divert to conduct a ballast water exchange?

A vessel will not be required to deviate from its voyage, or delay the voyage, in order to conduct a ballast water exchange.

5. Add § 151.2037 to read as follows:

§ 151.2037 If my vessel cannot conduct ballast water management because of its voyage and/or safety concerns, will I be prohibited from discharging ballast water?

A vessel who cannot practicably meet the requirements of paragraphs (b)(1)–(b)(4) of section § 151.2035 because its voyage does not take it into waters 200 nautical miles or greater from any shore for a sufficient length of time, and/or because of the safety concerns contained in § 151.2030, will not be prohibited from the discharge of ballast water in areas other than the Great Lakes and the Hudson River. However, the vessel must discharge only that amount operationally necessary and make ballast water records available to the local Captain of the Port upon request.

Dated: July 25, 2003.

Thomas H. Collins,

Admiral, U.S. Coast Guard, Commandant.

[FR Doc. 03–19373 Filed 7–25–03; 4:33 pm]

BILLING CODE 4910–15–P

DEPARTMENT OF HOMELAND SECURITY

Coast Guard

33 CFR Part 165

[CGD08–03–029]

RIN 1625–AA11

Regulated Navigation Area; Reporting Requirements for Barges Loaded with Certain Dangerous Cargoes, Inland Rivers Eighth Coast Guard District

AGENCY: Coast Guard, DHS.

ACTION: Notice of proposed rulemaking.

SUMMARY: The Coast Guard proposes an interim rule to establish a regulated navigation area (RNA) within all inland rivers of the Eighth Coast Guard District. This RNA will apply to towing vessel operators and fleeting area managers who are responsible for the movement

of barges carrying certain dangerous cargoes on inland rivers and requires them to report their position and other information to the Inland River Vessel Movement Center. This action is necessary to ensure public safety, prevent sabotage or terrorist acts, and facilitate the efforts of emergency services and law enforcement officers responding to terrorist attacks.

DATES: Comments and related material must reach the Coast Guard on or before September 15, 2003. Comments sent to the Office of Management and Budget (OMB) on collection of information must reach OMB on or before September 15, 2003.

ADDRESSES: You may mail comments and related material to Commander, Eighth Coast Guard District (m), Hale Boggs Federal Bldg., 501 Magazine Street, New Orleans LA 70130. Commander, Eighth Coast Guard District (m) maintains the public docket for this rulemaking. Comments and material received from the public, as well as documents indicated in this preamble as being available in the docket, are part of docket [CGD08–03–029] and are available for inspection or copying at Commander, Eighth Coast Guard District (m), Hale Boggs Federal Bldg., 501 Magazine Street, New Orleans LA 70130 between 8 a.m. and 3:30 p.m., Monday through Friday, except Federal holidays. You must also mail comments on collection of information to the Office of Information and Regulatory Affairs, Office of Management and Budget, 725 17th Street NW., Washington, DC 20503, ATTN: Desk Officer, U.S. Coast Guard.

FOR FURTHER INFORMATION CONTACT: Commander (CDR) Jerry Torok, Project Manager for the Eighth Coast Guard District Commander, Hale Boggs Federal Bldg., 501 Magazine Street, New Orleans LA 70130, telephone (504) 589–6271.

SUPPLEMENTARY INFORMATION:

Regulatory Information

On May 2, 2003, the Coast Guard published a similar temporary final rule and request for comments entitled ''Regulated Navigation Area; Reporting Requirements for Barges Loaded With Certain Dangerous Cargoes, Inland Rivers, Eighth Coast Guard District'' in the **Federal Register** (68 FR 23393). As of July 9, 2003, we have received six written comments on the temporary rule. The American Waterways Operators (AWO) requested a meeting with the Coast Guard regarding the temporary rule. A meeting was held on May 8, 2003, at the Hale Boggs Federal Building in New Orleans, LA.

Given that the temporary rule will expire October 31, 2003, the Coast Guard is allowing 45 days to comment on this proposed interim rule. The Coast Guard considers 45 days to be sufficient because we have already received comments from two associations—AWO and Gulf Coast Marine Association (GCMA), and two of the companies impacted by the temporary rule. As indicated in our ''Discussion of Comments and Changes'' section below, we have considered these comments in drafting our proposed interim rule and, where appropriate, we have made the proposed rule less burdensome than the temporary rule currently in effect. Also, this proposed rule would be issued as an interim rule with an additional comment period before we would impose any final rule.

Request for Comments

We encourage you to participate in this rulemaking by submitting comments and related material. If you do so, please include your name and address, identify the docket number for this rulemaking [CGD08–03–029], indicate the specific section of this document to which each comment applies, and give the reason for each comment. Please submit all comments and related material in an unbound format, no larger than 8½ by 11 inches, suitable for copying. If you would like to know they reached us, please enclose a stamped, self-addressed postcard or envelope. We will consider all comments and material received during the comment period. We may change this proposed rule in view of them.

Public Meeting

We do not now plan to hold a public meeting. But you may submit a request for a meeting by writing to Commander, Eighth Coast Guard District (m) at the address under **ADDRESSES** explaining why one would be beneficial. If we determine that one would aid this rulemaking, we will hold one at a time and place announced by a later notice in the **Federal Register**.

Background and Purpose

Terrorist attacks on September 11, 2001, inflicted catastrophic human casualties and property damage. These attacks highlighted the terrorists' abilities to utilize multiple means in different geographic areas thereby increasing their opportunities to maximize destruction.

Since the September 11, 2001 terrorist attacks on the World Trade Center in New York, the Pentagon in Arlington, Virginia and Flight 93, the Federal Bureau of Investigation (FBI) has issued several warnings concerning the potential for additional terrorist attacks within the United States. The threat of maritime attacks is real as evidenced by the October 2002 attack on a tank vessel off the coast of Yemen and the prior attack on the USS COLE. These attacks manifest a continuing threat to U.S. assets as described in the President's finding in Executive Order 13273 of August 21, 2002 (67 FR 56215, September 3, 2002). The President found that the security of the U.S. is endangered by the September 11, 2001 attacks and terrorist attacks continue to endanger the international relations of the United States. See also Continuation of the National Emergency with Respect to Certain Terrorist Attacks, (67 FR 58317, September 13, 2002); Continuation of the National Emergency with Respect to Persons Who Commit, Threaten To Commit, or Support Terrorism, (67 FR 59447, September 20, 2002). The U.S. Maritime Administration (MARAD) in Advisory 02–07 advised U.S. shipping interests to maintain a heightened state of alert against possible terrorist attacks. MARAD also issued Advisory 03–03 informing operators of maritime interests of increased threat possibilities to vessels and facilities and a higher risk of terrorist attacks to the transportation community in the United States. The ongoing hostilities in Afghanistan and Iraq have made it prudent for U.S. ports and waterways to be on a higher state of alert due to the Al Qaeda organization and other similar organizations who have declared their intentions to conduct armed attacks on U.S. interests worldwide.

Therefore, on April 16, 2003, the Coast Guard established a temporary RNA within the inland rivers of the Eighth Coast Guard District in order to safeguard vessels, ports and waterfront facilities from sabotage or terrorist acts. The temporary RNA remains in effect and applies to barges loaded with certain dangerous cargoes (CDCs) operating on the Mississippi River above mile 235.0, Above Head of Passes, including all its tributaries; the Atchafalaya River above mile 55.0 including the Red River; the Ohio River and all its tributaries; and the Tennessee River from its confluence with the Ohio River to mile zero on the Mobile River and all other tributaries between these two rivers. The RNA affects vessels transporting barges loaded with CDCs that if used as weapons of terrorism could result in substantial loss of life, property, environmental damage, and grave economic consequences. The temporary rule requires operators of

barges loading or loaded with CDCs within the RNA to periodically report their position and other specified information to the Inland River Vessel Movement Center (IRVMC) for the protection against sabotage and terrorist acts. The temporary final rule was published May 2, 2003, in the **Federal Register** (68 FR 23393) and expires on October 31, 2003.

The Coast Guard has determined that there is a need to continue the reporting requirements for barges loaded with CDCs operating on inland rivers and therefore we are proposing to issue an interim rule while we continue to consider alternatives to increase maritime domain awareness on the inland rivers in the Eighth Coast Guard District. The proposed rule would allow the Coast Guard to enhance maritime security, protect ports and facilities and high-density population centers (metropolitan areas), control vessel traffic, develop contingency plans, and enforce regulations.

Discussion of Comments and Changes

As of July 9, 2003, we received six written comments on the temporary rule. The American Waterways Operators requested a meeting with the Coast Guard regarding the rule. The meeting was held on May 8, 2003, at the Hale Boggs Federal Building in New Orleans, LA. All comments received focused generally on: (1) Changes and clarification of the definitions; (2) use of marine chemist certification; (3) location and amount of reporting points; (4) CDC barges in fleeting areas (5) need, use and validity of the information being collected; (6) availability of the information being collected from other sources; (7) use of technology such as electronic reporting; (8) cost and burden of the reporting requirements; (9) justification of the regulation; and (10) consistency with existing regulations. Each of these groups of comments is discussed in more detail in the following paragraphs.

Definitions. Several comments suggested some of the definitions lead to confusion and should be clarified or removed.

Three comments were received regarding the definition of ''certain dangerous cargoes (CDCs)'' and how they were determined. CDCs have specific characteristics that make them a higher risk compared to the other cargoes listed in 49 CFR parts 171 and 172. The list of cargoes includes cargoes that have not been traditionally carried on the river but which are not prohibited from carriage. One comment addressed the inconsistency between the CDC definition of ammonium nitrate as stated in the temporary rule and the CDC definition as stated in 33 CFR 160.204, published February 28, 2003 in *Notification of Arrival in U.S. Ports* (68 FR 9537, 9544). The CDC list published in 33 CFR 160.204 applies to packaged cargoes listed in 49 CFR chapter I, subchapter C. As such, ammonium nitrate in bulk is currently not considered a CDC. The Coast Guard proposes to use the same definition as set out in 33 CFR 160.204 with the addition of propylene oxide.

Three comments received stated that the definitions of ''empty'', ''gas free'' and ''loaded'' were confusing and misleading. We agree. The proposed rule will apply to barges carrying CDCs or CDC residue and the terms ''empty'', ''gas free'' and ''loaded'' will no longer be used. We received one comment suggesting that the definition for ''final destination'' could be removed if the regulation section was amended to simply require a report upon dropping off a CDC barge at a fleeting area or facility. We agree and propose to remove the term ''final destination'' and have changed the regulation accordingly. We received two comments stating that the definition of ''operator'' is vague. We agree. We propose to change the word ''operator'' to ''towing vessel operator''. Towing vessel operator would be defined as ''Captain or pilot who is on watch.'' Also, we propose that a ''company representative'' or ''dispatcher'' may report the specific information required by the purpose of the rule to the IRVMC on behalf of the towing vessel operator or fleeting area manager.

Marine Chemist Certification. We received one comment regarding the use of a marine chemist to certify barges are ''gas free.'' As we stated in the preceding paragraph, the terms ''empty'', ''gas free'', and ''loaded'' are not used in this proposed rule. We have made the proposed rule applicable only to barges carrying CDCs or CDC residue. A barge is not carrying CDCs or CDC residue when it has never carried CDCs or when it has been certified as ''gas free'' by a marine chemist.

Location and Number of Reporting Points. We received several comments related to the location and number of reporting points. One comment asked us why the RNA did not continue to, or beyond, New Orleans, Louisiana. The proposed RNA is the same as the regulated area in the temporary rule. The regulated area in the temporary rule does not extend below mile 235.0 on the Lower Mississippi River (Baton Rouge, Louisiana) because the NOA regulations published February 28, 2003, in the **Federal Register**, apply to all domestic barges carrying CDCs operating below mile 235.0 on the Lower Mississippi River. Making this proposed rule continue to, or beyond, New Orleans, Louisiana would result in duplicative reporting to the National Vessel Movement Center (NVMC) and the Inland River Vessel Movement Center (IRVMC). Therefore the location for the proposed RNA remains unchanged from the regulated area in the temporary rule currently in effect.

Three comments were received regarding several reporting points being located at a turn or in other hazardous areas of the waterway. The comments recommended changing the location of the reporting points. We agree. We have proposed to have a segment of the waterway serve as a reporting point (that is, the towing vessel operator would be required to report to the IRVMC when transiting upbound between mile 235.0 and mile 240.0 on the Lower Mississippi River). The proposed reporting points, based on recommendations from the waterway users, are reflected in table 165.830(e).

One comment recommended the reporting points should be the same for upbound and downbound. We agree, with the exception of seven reporting points, and the appropriate changes are reflected in the reporting points proposed in table 165.830(e).

Two comments recommended using the Captain of the Port (COTP) boundaries as reporting points because the COTP would be able to determine when a CDC barge enters and departs the zone, allowing for a reduction in the number of reporting points. We disagree. The IRVMC requires reporting within a COTP zone to monitor CDC barge movement through densely populated areas and other areas of concern. This information is disseminated to the appropriate COTP in which the CDC barge is located.

Fleeting Areas. We received two comments that the responsibility of reporting movements of CDC barges in fleeting areas was unclear. We agree and propose to change the regulatory text to specifically address CDC barges in fleeting areas. The Coast Guard proposes that fleeting managers or operators would not be required to report to the IRVMC when moving CDC barges within a fleet using a fleet towing vessel. However, they would be required to report to the IRVMC when a fleet towing vessel moves one or more CDC barges from one fleeting area to another fleeting area or to a facility. The Coast Guard also proposes to add the requirement that fleeting managers report all CDC barges in the fleeting area once a day to the IRVMC. This

requirement has been determined to be necessary to ensure accountability for CDC barges located within fleeting areas in the RNA. A company representative or dispatcher would be allowed to report to the IRVMC on behalf of the fleeting area manager.

Need, Use and Validity of the Information Being Collected. We received three comments regarding the vagueness of the Coast Guard's need for the information being collected and how the Coast Guard intends to use this information. We also received one comment questioning how the Coast Guard intends to validate the information received.

The information to be collected in this proposed rule will be used for the same purposes as explained in the Collection of Information section of the temporary final rule—to enhance maritime domain awareness by tracking the movement of certain dangerous cargoes throughout the inland river system, and enable the Coast Guard to increase port safety and security and promote the uninterrupted flow of commerce within the Eighth Coast Guard District. The information will also be used to enhance maritime security, protect ports and facilities and high-density population centers (metropolitan areas), control vessel traffic, develop contingency plans, and enforce regulations.

The Coast Guard has used the information collected pursuant to the temporary final rule to maintain continuous maritime domain awareness on the inland rivers so that we may respond, as appropriate, to an actual or threatened terrorist action. We intend to validate the information received through random escorts of towing vessels with CDC barges as they transit the RNA. The Coast Guard will also address the validity of information as it explores the availability of information available from other sources that would tend to validate information reported to the Coast Guard.

Since the temporary RNA has been in effect the Coast Guard has re-evaluated the need for the information being reported to the IRVMC at the following times: (1) 4 hours prior to loading a barge with CDCs, (2) 4 hours prior to dropping off a CDC barge at a fleeting area, and (3) 4 hours prior to picking up one or more CDC barges from a fleeting area. The Coast Guard has determined that there is no longer a need for reporting to the IRVMC 4 hours prior to loading a barge with CDCs. However, the Coast Guard needs to know where a CDC barge is within the RNA at all times and proposes to change the conditions under which a report must be made to the IRVMC to: (1) Upon point of entry into the RNA with one or more CDC barges; (2) 4 hours prior to originating a voyage within the RNA with one or more CDC barges; (3) upon dropping off one or more CDC barges at a fleeting area or facility; (4) upon picking up one or more additional CDC barges from a fleeting area or facility; (5) upon moving one or more CDC barges from one fleeting area to another fleeting area; (6) once daily, report all CDC barges within a fleeting area; (7) at designated reporting points in table 165.830(e); (8) when estimated time of arrival (ETA) to a reporting point varies by 6 hours from the previously reported ETA; (9) any significant deviation from previously reported information; (10) upon departing the RNA with one or more CDC barges; and (11) when directed by the IRVMC.

Availability of the Information From Other Sources. We received four comments on the availability of the information being collected from other sources. One comment mentioned that if we needed to know where the CDC barge was we would be able to request the data at any ''particular moment in time'' from the vessel operators or the Army Corps of Engineers. We agree that the Army Corps of Engineers collects adequate information from towing vessel operators and we are working with the Army Corps of Engineers to access that information. Once we are authorized to receive the information and the appropriate electronic systems are in place and tested, then we will re-evaluate the reporting points that coincide with the lock and dams (L&D). Until such time we are proposing to continue requiring information at reporting points that coincide with Army Corps of Engineer's L&Ds.

There was also discussion regarding the possibility of companies submitting real-time barge movement information to the Coast Guard via computer tracking programs in lieu of reporting to the Coast Guard at individual reporting points. A number of technology issues must be addressed in this area before this could be accomplished. Therefore, the Coast Guard proposes to maintain the manual collection of information from the reporting party in the interim rule while we continue to work with other government agencies and industry partners to research and develop alternatives to collecting the information necessary for the Coast Guard to maintain continual maritime domain awareness at any threat level.

Use of Technology. We received three comments regarding the use of technology to collect information by requiring electronic delivery of the information by automatic tracking devices and the web through real-time tracking programs. In response to these comments the Coast Guard is exploring existing systems used by affected companies for the possibility of integration of these systems. Before publishing the temporary final rule that established the existing RNA, the Coast Guard established the Inland River Vessel Movement Center (IRVMC), creating one location to which reports are to be made vice requiring reports to be made to each Captain of the Port (COTP) in which the CDC barge was operating. This proposed rule keeps the IRVMC in place, alleviating the burden on the towing vessel operator, responsible for a CDC barge, of having to determine which COTP zone they are operating in and maintaining a contact list for each COTP. The IRVMC accepts telephone (toll free), facsimile (toll free), and e-mail transmissions as means of reporting the information. Persons subject to this requirement may utilize the means that most efficiently meet their needs, provided that the information and timeliness requirements are met. The Coast Guard also has a reporting form and e-mail link available on the Internet at *http://www.uscg.mil/d8/Divs/M/IRVMC.htm.*

The Coast Guard proposes to continue receiving reports as required by the temporary rule. However, the Coast Guard proposes to consider and approve alternative methods, to be used by a reporting party, to meet any reporting requirements if: (1) The reporting party submits a written request for the alternative to Commander, Eighth Coast Guard District (m), Hale Boggs Federal Bldg., 501 Magazine Street, New Orleans LA 70130; and (2) the alternative provides an equivalent level of reporting to that which would be achieved by the Coast Guard with the required check-in points.

Cost and Burden of the Reporting Requirements. We received several comments regarding the cost and burden of the reporting requirements. One comment mentioned that the preparation of reports for the Coast Guard by smaller or midsize companies that do not have 24-hour dispatchers adds to the daily workload of the mariner. We have added to the proposed regulatory text that alternative reporting may be requested from the Eighth Coast Guard District Commander.

Two comments suggested that the Coast Guard could obtain this information from the Army Corps of Engineers rather than have separate reporting points for the Coast Guard thereby reducing the reporting burden. As stated earlier in this rule, we agree that the Army Corps of Engineers

collects adequate information from the towing vessel operator and we are working with the Army Corps of Engineers to access the information. However in the interim, we are proposing to continue to use locks as reporting points.

Another suggestion was made to reduce the reporting requirements to a single report every 24 hours during periods of lower Maritime Security (MARSEC) levels, and, if the MARSEC level rose, the reporting requirements would be increased. However, this would not satisfy the Coast Guard's need to maintain constant maritime domain awareness for defined areas along the river systems, nor will it provide us timely information if the MARSEC level is increased due to a threat.

Justification of the Regulation. We received two comments concerning the justification for the regulation. One questioned why we implemented the RNA when we did; one questioned the justification for the timing of the RNA because we lowered the Maritime Security Condition (MARSEC) level the day the temporary RNA was effective; and another one questioned why the normal regulatory process of a notice of proposed rulemaking was not used. The effective date of the RNA and the change in the MARSEC level were coincidental. As a component of the Department of Homeland Security, the Coast Guard has a responsibility to ensure the safety and security of our ports and waterways. The temporary RNA and the proposed RNA will allow the Coast Guard to maintain constant maritime domain awareness on the inland rivers.

Response to Comments Summary

In response to these comments the Coast Guard is (1) removing the requirement to report 4 hours prior to loading a CDC barge in the RNA; (2) removing the requirement of reporting 4 hours prior to dropping off a CDC barge at a fleeting area; (3) establishing reporting requirements specifically for fleeting area managers; (4) considering and approving requests for alternative methods of meeting reporting requirements; (5) amending or removing some reporting points that were in unsafe areas; (6) exploring a reduction in checkpoints on pooled rivers by using Army Corps of Engineers data from L&Ds; (7) researching existing systems employed by affected companies with the possibility of the integration of these systems; and (8) researching technology for automatic tracking of CDC barges.

Discussion of Proposed Rule

The Coast Guard proposes to establish a regulated navigation area for the Mississippi River above mile 235.0, above Head of Passes, including all its tributaries; the Atchafalaya River above mile 55.0, including the Red River; the Ohio River and all its tributaries; and the Tennessee River from its confluence with the Ohio River to mile zero on the Mobile River and all other tributaries between these two rivers. This proposed rule applies to: (1) Towing vessel operators responsible for one or more CDC barges within the regulated area; and (2) fleeting area managers responsible for CDC barges in a fleeting area. The terms barge, certain dangerous cargoes (CDCs), downbound, CDC barge, Eighth Coast Guard District, towing vessel operator, and upbound are defined in the regulatory section of this proposed rule.

Towing vessel operators responsible for one or more CDC barges would be required to report specific information, to the IRVMC, under the following conditions: (1) Upon point of entry into the RNA with one or more CDC barges; (2) 4 hours prior to originating a voyage within the RNA with one or more CDC barges; (3) upon dropping off one or more CDC barges at a fleeting area or facility; (4) upon picking up one or more additional CDC barges from a fleeting area or facility; (5) at designated reporting points in table 165.830(e); (6) when estimated time of arrival (ETA) to a reporting point varies by 6 hours from the previously reported ETA; (7) any significant deviation from previously reported information; (8) upon departing the RNA with one or more CDC barges; and (9) when directed by the IRVMC.

Fleeting area managers would be required to report specific information to the IRVMC under the following conditions: (1) Once daily, report all CDC barges within the fleeting area; (2) upon moving a CDC barge from one fleeting area to another or to a facility by fleeting towing vessels; (3) any significant deviation from previously reported information; and (4) when directed by the IRVMC.

A company representative or dispatcher may report the required information to the IRVMC on behalf of the towing vessel operator or fleeting area manager.

Each report made to the IRVMC, by a towing vessel operator or fleeting area manager, must contain all the information items specified in tables 165.830(f) and 165.830(g), respectively.

Reports must be made to the IRVMC, either by telephone to (866) 442–6089, by fax to (866) 442–6107, or by e-mail to *irvmc@cgstl.uscg.mil.* A reporting form and e-mail link is available at *http://www.uscg.mil/d8/Divs/M/IRVMC.htm.*

The Coast Guard proposes to consider and approve alternative reporting methods to meet any reporting requirements if: (1) The request for the alternative is submitted in writing to Commander, Eighth Coast Guard District (m), Hale Boggs Federal Bldg., 501 Magazine Street, New Orleans LA 70130; and (2) the alternative provides an equivalent level of reporting to that which would be achieved by the Coast Guard with the required check-in points.

Deviation from this rule is prohibited unless specifically authorized by the Commander, Eighth Coast Guard District or designated representatives.

Regulatory Evaluation

This proposed rule is not a ''significant regulatory action'' under section 3(f) of Executive Order 12866, Regulatory Planning and Review, and does not require an assessment of potential costs and benefits under section 6(a)(3) of that Order. The Office of Management and Budget has not reviewed it under that Order. It is not ''significant'' under the regulatory policies and procedures of the Department of Homeland Security (DHS).

We expect the economic impact of this proposed rule to be so minimal that a full Regulatory Evaluation under the regulatory policies and procedures of DHS is unnecessary. We present this Regulatory Evaluation for the purposes of information.

Evaluation. The regulatory baseline for this rule is the temporary rule. The cost for complying with the rule will differ depending on the means used to make a report to the IRVMC and the type of report, either an initial report or an update. The cost of the rule presented below is based on the average number of reports received by the IRVMC in April 2003 and May 2003.

ANNUAL COST AND BENEFIT OF THE PROPOSED RULE

[2003 Dollars]

Item	Cost per initial call	Cost per update call	Total
Personnel	$9462	$17,871	$27,333
Operating Expenses	28,386	53,613	81,999
Total	37,848	71,484	109,332

This cost estimate assumes: (1) The average merchant mariner's hourly rate is $30, (2) the average initial call is 6 minutes, (3) the average update call is 2 minutes, (4) the average cost per cell phone call is $1.50 per minute, and (5) 15 percent of all responses are initial reports to the IRVMC. Therefore, based on 177 respondents, the average cost is $618 per CDC barge per year. The reporting requirements proposed are necessary to provide immediate, improved security for the public, vessels, and U.S. ports and waterways. The requirements do not alter normal barge transits. The minimal hardships that may be experienced by persons or vessels, as a result of this rule, are necessary to the national interest in protecting the public, vessels, and vessel crews from the devastating consequences of acts of terrorism, and from sabotage or other subversive acts, accidents, or other causes of a similar nature.

Small Entities

Under the Regulatory Flexibility Act (5 U.S.C. 601–612), we have considered whether this proposed rule would have a significant economic impact on a substantial number of small entities. The term ''small entities'' comprises small businesses, not-for-profit organizations that are independently owned and operated and are not dominant in their fields, and governmental jurisdictions with populations of less than 50,000.

The Coast Guard certifies under 5 U.S.C. 605(b) that this proposed rule would not have a significant economic impact on a substantial number of small entities. This rule will affect the following entities, some of which may be small entities: Towing vessel operators and fleeting area managers responsible for CDCs barges on inland waterways within the Eighth Coast Guard District. This RNA will not have a significant economic impact on a substantial number of small entities because this rule does not require any alteration of barge operations or transits. The operational communications required by this RNA do not require towing vessel operators or fleeting area managers to obtain new equipment, and can be made toll free to the IRVMC.

If you think that your business, organization, or governmental jurisdiction qualifies as a small entity and that this rule would have a significant economic impact on it, please submit a comment (see **ADDRESSES**) explaining why you think it qualifies and how and to what degree this rule would economically affect it.

Assistance for Small Entities

Under section 213(a) of the Small Business Regulatory Enforcement Fairness Act of 1996 (Pub. L. 104–121), we want to assist small entities in understanding this proposed rule so that they can better evaluate its effects on them and participate in the rulemaking. If the rule would affect your small business, organization, or governmental jurisdiction and you have questions concerning its provisions or options for compliance, please contact CDR Jerry Torok, Project Manager for the Eighth Coast Guard District Commander, Hale Boggs Federal Bldg., 501 Magazine Street, New Orleans LA 70130, telephone (504) 589–6271.

Collection of Information

This proposed rule would call for a collection of information under the Paperwork Reduction Act of 1995 (44 U.S.C. 3501–3520.). As defined in 5 CFR 1320.3(c), ''collection of information'' comprises reporting, recordkeeping, monitoring, posting, labeling, and other, similar actions. The title and description of the information collection, a description of those who must collect the information, and an estimate of the total annual burden follow. The estimate covers the time for reviewing instructions, searching existing sources of data, gathering and maintaining the data needed, and completing and reviewing the collection.

This proposed rule revises an existing OMB-approved collection of information (1625–0105). The new collection of information estimate is based on data gathered as a result of the information collected under the temporary rule and is based on actual reports received by the IRVMC, as well as actual observation and tracking, for April 2003 and May 2003.

Title: Regulated Navigation Areas; Reporting Requirements for Barges Loaded with Certain Dangerous Cargoes, Inland Rivers, Eighth Coast Guard District and the Illinois Waterway, Ninth Coast Guard District.

OMB Control Number: 1625–0105.

Summary of the Collection of Information: The Coast Guard requires position and intended movement reporting, and fleeting operations reporting, from barges carrying CDCs in the inland rivers within the Eighth and Ninth Coast Guard Districts. This rule will amend 33 CFR part 165 to require:

Towing vessel operators and fleeting area managers responsible for CDC barges must report the following information via toll free telephone, toll free fax, or email:

a. Name of barge and towboat;

b. Name of fleeting area and facility;

c. Estimated time of arrival (ETA) at fleeting area and facility;

d. Planned route, including estimated time of departure (ETD) from fleeting area and facility;

e. Upon entry into the covered geographical area;

f. 4 hours prior to originating a voyage with a CDC within the RNA

g. Upon picking up an additional CDC barge from a fleeting area or facility

h. Upon dropping off a CDC barge at a fleeting area or facility,

i. Upon moving a CDC barge from one fleeting area to another fleeting area or facility;

j. Once daily, all CDC barges within a fleeting area

k. ETA at approximately 105 designated reporting points within the covered geographical area;

l. At any time ETA to a reporting point varies by 6 hours from the previously reported ETA;

m. any significant deviation from previously reported information;

n. Upon departing the covered geographical area; and

o. When directed by the Coast Guard.

A company representative or dispatcher may report to the IRVMC on behalf of a towing vessel operator or fleeting area manager.

Need for Information: To ensure port safety and security and to ensure the uninterrupted flow of commerce, the

Coast Guard proposes to issue regulations requiring position and intended movement reporting and fleeting operations reporting, from barges carrying CDCs in the inland rivers within the Eighth and Ninth Coast Guard Districts.

Proposed Use of Information: The information is required to enhance maritime security, protect ports and facilities and high-density population centers (metropolitan areas), control vessel traffic, develop contingency plans, and enforce regulations. The Coast Guard has used the information to maintain continuous maritime domain awareness on the inland rivers so that we may respond as appropriate to an actual or threatened terrorist action and enhance maritime security by boarding and/or escorting CDC barges in the vicinity of high-density population areas.

Description of the Respondents: The respondents are owners, agents, masters, towing vessel operators, or persons in charge of barges loaded with CDCs or having CDC residue operating on the inland rivers located within the Eighth and Ninth Coast Guard Districts.

Number of Respondents: The existing OMB-approved collection number of respondents is 3,505. This proposed rule will decrease the number of respondents by 3,328 to a total of 177.

Frequency of Response: Towing vessel operators moving barges carrying CDCs or CDC residue will submit reports as necessary. The existing OMB-approved collection annual number of responses is 7,711. This proposed rule will increase the number of responses by 13,313 to a total of 21,024.

Burden of Response: The existing OMB-approved collection burden of response is 15 minutes (0.25 hours) (burden of response is the time required to complete the paperwork requirements of the rule for a single response). This proposed rule will decrease the burden of response by 9 minutes (0.15 hours) to a total of 6 minutes (0.10 hours).

Estimate of Total Annual Burden: The existing OMB-approved collection total annual burden is 1,928 hours (total annual burden is the time required to complete the paperwork requirements of the rule for all responses). This proposed rule will decrease the total annual burden by 1017 hours to a total of 911 hours.

As required by the Paperwork Reduction Act of 1995 (44 U.S.C. 3507(d)), we have submitted a copy of this rule to the Office of Management and Budget (OMB) for its review and approval of the revised collection of information. The existing OMB-approved collection (1625–1505) expires on October 31, 2003.

We ask for public comment on the collection of information to help us determine how useful the information is, whether it can help us perform our functions better, whether it is readily available elsewhere, how accurate our estimate of the burden of collection is, how valid our methods for determining burden are, how we can improve the quality, usefulness, and clarity of the information, and how we can minimize the burden of collection.

If you submit comments on the collection of information, submit them both to OMB and to the Docket Management Facility where indicated under **ADDRESSES,** by the date under **DATES.**

You need not respond to a collection of information unless it displays a currently valid control number from OMB. If OMB does not approve this revised collection of information, we will publish a notice in the **Federal Register** of OMB's decision.

Federalism

A rule has implications for federalism under Executive Order 13132, Federalism, if it has a substantial direct effect on State or local governments and would either preempt State law or impose a substantial direct cost of compliance on them. We have analyzed this proposed rule under that Order and have determined that it does not have implications for federalism.

Unfunded Mandates Reform Act

The Unfunded Mandates Reform Act of 1995 (2 U.S.C. 1531–1538) requires Federal agencies to assess the effects of their discretionary regulatory actions. In particular, the Act addresses actions that may result in the expenditure by a State, local, or tribal government, in the aggregate, or by the private sector of $100,000,000 or more in any one year. Though this proposed rule would not result in such an expenditure, we do discuss the effects of this rule elsewhere in this preamble.

Taking of Private Property

This proposed rule would not affect a taking of private property or otherwise have taking implications under Executive Order 12630, Governmental Actions and Interference with Constitutionally Protected Property Rights.

Civil Justice Reform

This proposed rule meets applicable standards in sections 3(a) and 3(b)(2) of Executive Order 12988, Civil Justice Reform, to minimize litigation, eliminate ambiguity, and reduce burden.

Protection of Children

We have analyzed this proposed rule under Executive Order 13045, Protection of Children from Environmental Health Risks and Safety Risks. This rule is not an economically significant rule and would not create an environmental risk to health or risk to safety that might disproportionately affect children.

Indian Tribal Governments

This proposed rule does not have tribal implications under Executive Order 13175, Consultation and Coordination with Indian Tribal Governments, because it would not have a substantial direct effect on one or more Indian tribes, on the relationship between the Federal Government and Indian tribes, or on the distribution of power and responsibilities between the Federal Government and Indian tribes.

Energy Effects

We have analyzed this proposed rule under Executive Order 13211, Actions Concerning Regulations That Significantly Affect Energy Supply, Distribution, or Use. We have determined that it is not a ''significant energy action'' under that order because it is not a ''significant regulatory action'' under Executive Order 12866 and is not likely to have a significant adverse effect on the supply, distribution, or use of energy. The Administrator of the Office of Information and Regulatory Affairs has not designated it as a significant energy action. Therefore, it does not require a Statement of Energy Effects under Executive Order 13211.

Environment

We have analyzed this rule under Commandant Instruction M16475.1D, which guides the Coast Guard in complying with the National Environmental Policy Act of 1969 (NEPA) (42 U.S.C. 4321–4370f), and have concluded that there are no factors in this case that would limit the use of categorical exclusion under section 2.B.2 of the Instruction. Therefore, this rule is categorically excluded, under figure 2–1 paragraph (34)(g), of the instruction, from further environmental documentation because this rule is not expected to result in any significant environmental impact as described in NEPA. A draft ''Environmental Analysis Check List'' and a draft ''Categorical Exclusion Determination'' are available where indicated under **ADDRESSES.** Comments on this section will be considered before we make a final

decision on whether to categorically exclude this rule from further environmental review.

List of Subjects in 33 CFR Part 165

Harbors, Marine safety, Navigation (water), Reporting and recordkeeping requirements, Security measures, Vessels, Waterways.

For the reasons discussed in the preamble, the Coast Guard proposed to amend 33 CFR part 165 as follows:

PART 165—REGULATED NAVIGATION AREAS AND LIMITED ACCESS AREAS

1. The authority citation for part 165 continues to read as follows:

Authority: 33 U.S.C. 1226, 1231; 46 U.S.C. Chapter 701; 50 U.S.C. 191, 195; 33 CFR 1.05–1(g), 6.04–1, 6.04–6, and 160.5; Pub. L. 107–295, 166 Stat. 2064; Department of Homeland Security Delegation No. 0170.1.

2. Add § 165.830 to read as follows:

§ 165.830 Regulated Navigation Area; reporting requirements for barges loaded with certain dangerous cargoes, inland rivers, Eighth Coast Guard District.

(a) *Regulated Navigation Area.* The following waters are a Regulated Navigation Area (RNA): the Mississippi River above mile 235.0, Above Head of Passes, including all its tributaries; the Atchafalaya River above mile 55.0 including the Red River; the Ohio River and all its tributaries; and the Tennessee River from its confluence with the Ohio River to mile zero on the Mobile River and all other tributaries between these two rivers.

(b) *Applicability.* This section applies to towing vessel operators and fleeting area managers responsible for CDC barges in the RNA. This section does not apply to:

(1) Towing vessel operators responsible for barges not carrying CDCs barges, or

(2) Towing vessel operators moving one or more CDC barges within a fleeting area.

(c) *Definitions.* As used in this section—

Barge means a non-self propelled vessel engaged in commerce, as set out in 33 CFR 160.204.

Certain Dangerous Cargo or *(CDC)* includes any of the following:

(1) Division 1.1 or 1.2 explosives as defined in 49 CFR 173.50.

(2) Division 1.5D blasting agents for which a permit is required under 49 CFR 176.415 or, for which a permit is required as a condition of a Research and Special Programs Administration exemption.

(3) Division 2.3 ''poisonous gas'', as listed in 49 CFR 172.101 that is also a ''material poisonous by inhalation'' as defined in 49 CFR 171.8, and that is in a quantity in excess of 1 metric ton per barge.

(4) Division 5.1 oxidizing materials for which a permit is required under 49 CFR 176.415 or, for which a permit is required as a condition of a Research and Special Programs Administration exemption.

(5) A liquid material that has a primary or subsidiary classification of Division 6.1 ''poisonous material'' as listed in 49 CFR 172.101 that is also a ''material poisonous by inhalation'', as defined in 49 CFR 171.8 and that is in a bulk packaging, or that is in a quantity in excess of 20 metric tons per barge when not in a bulk packaging.

(6) Class 7, ''highway route controlled quantity'' radioactive material or ''fissile material, controlled shipment'', as defined in 49 CFR 173.403.

(7) Bulk liquefied chlorine gas and Bulk liquefied gas cargo that is flammable and/or toxic and carried under 46 CFR 154.7.

(8) The following bulk liquids—

(i) Acetone cyanohydrin,

(ii) Allyl alcohol,

(iii) Chlorosulfonic acid,

(iv) Crotonaldehyde,

(v) Ethylene chlorohydrin,

(vi) Ethylene dibromide,

(vii) Methacrylonitrile,

(viii) Oleum (fuming sulfuric acid), and

(ix) Propylene Oxide.

CDC barge means a barge containing CDCs or CDC residue.

Downbound means the tow is traveling with the current.

Eighth Coast Guard District means the Coast Guard District as set out in 33 CFR part 3.40–1.

Inland River Vessel Movement Center or *(IRVMC)* means the Coast Guard office that is responsible for collecting the information required by this section.

Towing vessel operator means the Captain or pilot who is on watch.

Upbound means the tow is traveling against the current.

(d) *Regulations.* The following must report to the Inland River Vessel Movement Center (IRVMC):

(1) The towing vessel operator responsible for one or more CDC barges in the RNA must report all the information items specified in table 165.830(f), in paragraph (f) of this section, to the Inland River Vessel Movement Center (IRVMC):

(i) Upon point of entry into the RNA with one or more CDC barges;

(ii) Four hours before originating a voyage within the RNA with one or more CDC barges;

(iii) Upon dropping off one or more CDC barges at a fleeting area or facility;

(iv) Upon picking up one or more additional CDC barges from a fleeting area or facility;

(v) At designated reporting points, set forth in table 165.830(e), in paragraph (e) of this section;

(vi) When the estimated time of arrival (ETA) to a reporting point varies by 6 hours from the previously reported ETA;

(vii) Any significant deviation from previously reported information;

(viii) Upon departing the RNA with one or more CDC barges; and

(ix) When directed by the IRVMC.

(2) The fleeting area manager responsible for one or more CDC barges in the RNA must report all the information items specified in table 165.830(g), in paragraph (g) of this section, to the Inland River Vessel Movement Center (IRVMC):

(i) Once daily, report all CDC barges within the fleeting area;

(ii) Upon moving one or more CDC barges from one fleeting area to another fleeting area or facility by a fleet tow boat;

(iii) Any significant deviation from previously reported information; and

(iv) When directed by the IRVMC.

(3) Reports required by this section may be made by a company representative or dispatcher on behalf of the towing vessel operator or fleeting area manager.

(4) Reports required by this section must be made to the IRVMC either by telephone to (866) 442–6089, by fax to (866) 442–6107, or by e-mail to *irvmc@cgstl.uscg.mil.* A reporting form and e-mail link are available at *http://www.uscg. mil/d8/Divs/M/IRVMC.htm.*

(5) The general regulations contained in 33 CFR 165.13 apply to this section.

(e) *Eighth Coast Guard District Inland River RNA Reporting points.* Towing vessel operators responsible for one or more CDC barges in the RNA must make reports to the Inland River Vessel Movement Center at each point listed in table 165.830(e) of this paragraph.

TABLE 165.830(e).—EIGHTH COAST GUARD DISTRICT INLAND RIVER REPORTING POINTS

(1) Lower Mississippi River (LMR), between Mile Markers (M):
- (i) M 235.0–240.0 (Entering & Exiting RNA)
- (ii) M 338.0–343.0
- (iii) M 430.0–435.0
- (iv) M 520.0–525.0
- (v) M 621.0–626.0
- (vi) M 695.0–700.0
- (vii) M 772.0–777.0
- (viii) M 859.0–864.0
- (ix) M 945.0–950.0

(2) Upper Mississippi River (UMR), between Mile Markers (M) and Departing Lock & Dam (L&D), unless otherwise indicated:
- (i) L&D 3
- (ii) L&D 4
- (iii) L&D 8
- (iv) L&D 11
- (v) L&D 14
- (vi) L&D 18
- (vii) L&D 21
- (viii) L&D 25
- (ix) Arriving Melvin Price L&D (downbound)
- (x) Departing Melvin Price L&D (upbound)
- (xi) M 150.0–145.0
- (xii) M 66.0–61.0

(3) Missouri River (MOR), between Mile Markers (M):
- (i) M 54.0–56.0
- (ii) M 115.0–117.0
- (iii) M 208.0–210.0
- (iv) M 326.0–328.0
- (v) M 397.0–399.0
- (vi) M 487.0–489.0
- (vii) M 572.0–574.0
- (viii) M 652.0–654.0
- (ix) M 745.0–750.0

(4) Illinois River (ILR), at Mile Marker (M) and Lock & Dam (L&D), as indicated:
- (i) M 0.0
- (ii) Departing New LaGrange L&D
- (iii) M 140.0
- (iv) M 187.2 (Entering & Exiting RNA)

(5) Ohio River, between Mile Markers (M) and at Lock & Dam (L&D), as indicated:
- (i) M 950.0–952.0
- (ii) Arriving Smithland L&D
- (iii) M 826.0–828.0
- (iv) M 748.0–750.0
- (v) M 673.0–675.0
- (vi) M 628.0–630.0
- (vii) M 556.0–559.0
- (viii) M 511.0–513.0
- (ix) Departing Capt Anthony Meldahl L&D
- (x) Arriving Greenup L&D (upbound)
- (xi) Departing Greenup L&D (downbound)
- (xii) Departing Robert C. Byrd L&D (upbound)
- (xiii) Arriving Robert C. Bryd L&D (downbound)
- (xiv) Departing Belleville L&D
- (xv) Departing Hannibal L&D
- (xvi) Departing Montgomery L&D

(6) Allegheny River at Lock &Dam (L&D), as indicated:
- (i) Departing L&D 4 (upbound)
- (ii) Arriving L&D 4 (downbound)

(7) Mongahela River Departing Lock & Dam (L&D):
- (i) Grays Landing L&D
- (ii) L&D 3

(8) Kanawha River, at Lock & Dam (L&D), as indicated:
- (i) Arriving Winfield L&D (upbound)
- (ii) Departing Winfield L&D (downbound)

(9) Cumberland River, between Mile Markers (M) and Departing Lock & Dam (L&D), unless otherwise indicated:
- (i) Departing Old Hickory L&D (upbound)
- (ii) Arriving Old Hickory L&D (downbound)
- (iii) M 127.0–129.0
- (iv) Barkley L&D

(10) Tennessee River, between Mile Markers (M) and when Departing Lock & Dam (L&D), unless otherwise indicated:
- (i) Fort Loudon L&D
- (ii) Watts Bar L&D
- (iii) Departing Chickamauga L&D (upbound)
- (iv) Arriving Chickamauga L&D (downbound)

TABLE 165.830(e).—EIGHTH COAST GUARD DISTRICT INLAND RIVER REPORTING POINTS—Continued

(v) Nickajack L&D
(vi) Gunterville L&D
(vii) General Joe Wheeler L&D
(viii) Pickwick Landing L&D
(ix) M 122.0–124.0
(x) Kentucky L&D
(11) Tennessee-Tombigbee River, between Mile Markers (M) and when Departing Lock & Dam (L&D):
(i) Lock D
(ii) Aberdeen L&D
(iii) Aliceville L&D
(iv) M 202.0–203.0
(v) Coffeeville L&D
(12) Mobile River, at Mile Marker (M):
(i) 0.0 (Entering & Exiting RNA)
(13) Black Warrior River, when Departing L&D:
(i) Holt L&D
(14) Alabama River, when Departing L&D:
(i) Claiborne L&D
(ii) Henry L&D
(15) McClellan-Kerr Arkansas River Navigation System, when Departing Lock & Dam (L&D), unless otherwise indicated:
(i) Chouteau L&D
(ii) W.D. Mayo L&D
(iii) Ozark-Jeta Taylor L&D
(iv) L&D 9
(v) Arriving David D. Terry L&D (upbound)
(vi) Departing David D. Terry L&D (downbound)
(vii) L&D 2
(16) Red River, between Mile Markers (M) and when Departing Lock & Dam (L&D):
(i) L.C. Boggs L&D
(ii) Lock 3
(iii) M 178.0–180.0
(17) Atchafalaya River, at Mile Marker (M):
(i) 55.0 (Entering & Exiting RNA)

(f) *Information to be reported by towing vessel operators to the Inland River Vessel Movement Center.* Towing vessel operators responsible for one or more CDC barges in the RNA must report all the information required by this section, as set out in table 165.830(f) of this paragraph.

TABLE 165.830(f).—INFORMATION TO BE REPORTED TO THE INLAND RIVER VESSEL MOVEMENT CENTER (IRVMC) BY TOWING VESSEL OPERATORS

	24 hr contact number	Name of vessel moving the barge(s)	Barge(s) name and official number	Type name and amount of CDC onboard	Estimated time of departure from the fleeting area or facility	Planned route, name and location of destination of CDC barge (fleeting area or facility), including estimated time of arrival	Reporting point	Estimated time of arrival (ETA) to next reporting point (If applicable)
(1) Upon point of entry into the RNA with a CDC barge.	X	X	X	X	.....	X	X	X
(2) Four hours before to originating a voyage within the RNA with one or more CDC barges.	X	X	X	X	X	X	.....	X
(3) Upon dropping off one or more CDC barges at a fleeting area or facility.	.....	X	X	.....	.....	.....	.....	.....
(4) Upon picking up one or more additional CDC barges from a fleeting area or facility.	.....	X	X	X	.....	.....	.....	.....
(5) At designated reporting points in table 165.830 (e).	.....	X	X	If changed	.....	If changed	X	X
(6) When ETA to a reporting point varies by 6 hours from previously reported ETA.	.....	X	If changed	If changed	.....	.....	.....	X
(7) Any significant deviation from previously reported information (all that apply).	X	X	X	X	X	X	X	X
(8) Upon departing the RNA with a CDC barge(s).	.....	X	X	.....	.....	.....	X	.....
(9) When directed by the IRVMC	X	X	X	X	X	X	X	X

(g) *Information to be reported to the Inland River Vessel Movement Center by fleeting area managers.* Fleeting area managers responsible for one or more CDC barges in the RNA must report the information required by this section, as set out in table 165.830(g) to this paragraph.

TABLE 165.830(g).—INFORMATION TO BE REPORTED TO THE INLAND RIVER VESSEL MOVEMENT CENTER (IRVMC) BY FLEETING AREA MANAGERS

	24 hr contact number	Barge(s) name and official number	Type, name and amount of CDC onboard	Location of CDC barge (fleeting area or facility)
(1) Once daily, all CDC barges in a fleeting area	X	X	X	X
(2) Upon moving one or more CDC barges from one fleeting area to another fleeting area or facility, by a fleet tow boat		X	X	X
(3) Any significant deviation from previously reported information (all that apply)	X	X	X	X
(4) When directed by the IRVMC	X	X	X	X

(h) *Alternative reporting.* The Eighth Coast Guard District Commander may consider and approve alternative methods to be used by a reporting party to meet any reporting requirements if:

(1) the request is submitted in writing to Commander, Eighth Coast Guard District (m), Hale Boggs Federal Bldg., 501 Magazine Street, New Orleans, LA 70130; and

(2) the alternative provides an equivalent level of the reporting that which would be achieved by the Coast Guard with the required check-in points.

(i) Deviation from this section is prohibited unless specifically authorized by the Commander, Eighth Coast Guard District or the IRVMC.

Dated: July 22, 2003.

R.F. Duncan,

Rear Admiral, Coast Guard, Commander, Eighth Coast Guard District.

[FR Doc. 03–19364 Filed 7–25–03; 3:54 pm]

BILLING CODE 4910–15–P

DEPARTMENT OF HOMELAND SECURITY

Coast Guard

33 CFR Part 165

[CGD09–03–241]

RIN 1625–AA11

Regulated Navigation Area; Reporting Requirements for Barges Loaded With Certain Dangerous Cargoes, Illinois Waterway System Within the Ninth Coast Guard District

AGENCY: Coast Guard, DHS.

ACTION: Notice of proposed rulemaking.

SUMMARY: The Coast Guard proposes an interim rule to establish a regulated navigation area (RNA) for all portions of the Illinois Waterway System located in the Ninth Coast Guard District. This RNA will apply to towing vessel operators and fleeting area managers who are responsible for the movement of barges carrying certain dangerous cargoes on inland rivers and requires them to report their position and other information to the Inland River Vessel Movement Center. This action is necessary to ensure public safety, prevent sabotage or terrorist acts, and facilitate the efforts of emergency services and law enforcement officers responding to terrorist attacks.

DATES: Comments and related material must reach the Coast Guard on or before September 15, 2003. Comments sent to the Office of Management and Budget (OMB) on collection of information must reach OMB on or before September 15, 2003.

ADDRESSES: You may mail comments and related material to Commander (m), Ninth Coast Guard District, 1240 E. Ninth Street, Cleveland, OH 44199. Commander, Ninth Coast Guard District (m) maintains the public docket for this rulemaking. Comments and material received from the public, as well as documents indicated in this preamble as being available in the docket, are part of docket [CGD09–03–241] and are available for inspection or copying at Commander (m), Ninth Coast Guard District, 1240 E. Ninth Street, Cleveland, OH 44199 between 8 a.m. and 3:30 p.m., Monday through Friday, except Federal holidays. You must also mail comments on collection of information to the Office of Information and Regulatory Affairs, Office of Management and Budget, 725 17th Street NW., Washington, DC 20503, ATTN: Desk Officer, U.S. Coast Guard.

FOR FURTHER INFORMATION CONTACT: Commander Michael Gardiner or Lieutenant Matthew Colmer, Ninth Coast Guard District Marine Safety Division, at (216) 902–6045.

SUPPLEMENTARY INFORMATION:

Regulatory Information

On May 2, 2003, the Coast Guard published a similar temporary final rule and request for comments entitled ''Regulated Navigation Area; Reporting Requirements for Barges Loaded With Certain Dangerous Cargoes, Illinois Waterway System Within the Ninth Coast Guard District'' in the **Federal Register** (68 FR 23399).

The Ninth Coast Guard District did not receive any comments with regard to this rulemaking. However, since this rulemaking compliments a parallel rule published by the Eight Coast Guard District on May 2, 2003 (68 FR 23393), comments received by the Eighth District are addressed in this rulemaking as if received in response to our temporary final rule.

As of July 9, 2003, we have received six written comments on the temporary rule. The American Waterways Operators (AWO) requested a meeting with the Eighth Coast Guard District regarding the temporary rule. A meeting was held on May 8, 2003, at the Hale Boggs Federal Building in New Orleans, LA.

Given that the temporary rule will expire October 31, 2003, the Coast Guard is allowing 45 days to comment on this proposed interim rule. The Coast Guard considers 45 days to be sufficient because we have already received comments from two associations—AWO and Gulf Coast Marine Association (GCMA), and two of the companies impacted by the temporary rule. As indicated in our ''Discussion of Comments and Changes'' section below, we have considered these comments in drafting our proposed interim rule and, where appropriate, we have made the proposed rule less burdensome than the temporary rule currently in effect. Also, this proposed rule would be issued as an interim rule with an additional comment period before we would impose any final rule.

Request for Comments

We encourage you to participate in this rulemaking by submitting comments and related material. If you do so, please include your name and address, identify the docket number for this rulemaking [CGD09–03–241], indicate the specific section of this document to which each comment applies, and give the reason for each comment. Please submit all comments and related material in an unbound format, no larger than 8½ by 11 inches, suitable for copying. If you would like to know they reached us, please enclose a stamped, self-addressed postcard or envelope. We will consider all comments and material received during the comment period. We may change this proposed rule in view of them.

Public Meeting

We do not now plan to hold a public meeting. But you may submit a request for a meeting by writing to Commander, Ninth Coast Guard District (m) at the address under **ADDRESSES** explaining why one would be beneficial. If we determine that one would aid this rulemaking, we will hold one at a time and place announced by a later notice in the **Federal Register**.

Background and Purpose

Terrorist attacks on September 11, 2001, inflicted catastrophic human casualties and property damage. These attacks highlighted the terrorists' abilities to utilize multiple means in different geographic areas thereby increasing their opportunities to maximize destruction.

Since the September 11, 2001 terrorist attacks on the World Trade Center in New York, the Pentagon in Arlington, Virginia and Flight 93, the Federal Bureau of Investigation (FBI) has issued several warnings concerning the potential for additional terrorist attacks within the United States. The threat of maritime attacks is real as evidenced by the October 2002 attack on a tank vessel off the coast of Yemen and the prior attack on the USS COLE. These attacks manifest a continuing threat to U.S. assets as described in the President's finding in Executive Order 13273 of August 21, 2002 (67 FR 56215, September 3, 2002). The President found that the security of the U.S. is endangered by the September 11, 2001 attacks and terrorist attacks continue to endanger the international relations of the United States. See also Continuation of the National Emergency with Respect to Certain Terrorist Attacks, (67 FR 58317, September 13, 2002); Continuation of the National Emergency With Respect To Persons Who Commit, Threaten To Commit, Or Support Terrorism, (67 FR 59447, September 20, 2002). The U.S. Maritime Administration (MARAD) in Advisory 02–07 advised U.S. shipping interests to maintain a heightened state of alert against possible terrorist attacks. MARAD also issued Advisory 03–03 informing operators of maritime interests of increased threat possibilities to vessels and facilities and a higher risk of terrorist attacks to the transportation community in the United States. The ongoing hostilities in Afghanistan and Iraq have made it prudent for U.S. ports and waterways to be on a higher state of alert due to the Al Qaeda organization and other similar organizations who have declared their intentions to conduct armed attacks on U.S. interests worldwide.

Therefore, on April 16, 2003, the Coast Guard established a temporary RNA within the Illinois Waterway System within the Ninth Coast Guard District in order to safeguard vessels, ports and waterfront facilities from sabotage or terrorist acts. The temporary RNA remains in effect and applies to barges loaded with certain dangerous cargoes (CDCs) operating on the Illinois Waterway System above mile 187.2 to the Chicago Lock on the Chicago River at mile 326.7, and to the confluence of the Calumet River and Lake Michigan at mile 333.5 of the Calumet River. The RNA affects vessels transporting barges loaded with CDCs that if used as weapons of terrorism could result in substantial loss of life, property, environmental damage, and grave economic consequences. The temporary rule requires operators of barges loading or loaded with CDCs within the RNA to periodically report their position and other specified information to the Inland River Vessel Movement Center (IRVMC) for the protection against sabotage and terrorist acts. The temporary final rule was published May 2, 2003, in the **Federal Register** (68 FR 23399) and expires on October 31, 2003.

The Coast Guard has determined that there is a need to continue the reporting requirements for barges loaded with CDCs operating on inland rivers and therefore we are proposing to issue an interim rule while we continue to consider alternatives to increase maritime domain awareness on the inland rivers in the Ninth Coast Guard District. The proposed rule would allow the Coast Guard to enhance maritime security, protect ports and facilities and high-density population centers (metropolitan areas), control vessel traffic, develop contingency plans, and enforce regulations.

Discussion of Comments and Changes

The Ninth Coast Guard District did not receive any comments with regard to this rulemaking. However, since this rulemaking compliments a parallel rule published by the Eighth Coast Guard District on May 2, 2003 (68 FR 23393), those comments are addressed in this rulemaking as if received in response to our temporary final rule, request for comments.

As of July 9, 2003, the Eighth Coast Guard District received six written comments on the temporary rule. The American Waterways Operators requested a meeting with the Coast Guard regarding the rule. The meeting was held on May 8, 2003, at the Hale Boggs Federal Building in New Orleans, LA. All comments received focused generally on: (1) Changes and clarification of the definitions; (2) use of marine chemist certification; (3) location and amount of reporting points; (4) CDC barges in fleeting areas (5) need, use and validity of the information being collected; (6) availability of the information being collected from other sources; (7) use of technology such as electronic reporting; (8) cost and burden of the reporting requirements; (9) justification of the regulation; and (10) consistency with existing regulations. Each of these groups of comments is discussed in more detail in the following paragraphs.

Definitions. Several comments suggested some of the definitions lead to confusion and should be clarified or removed.

Three comments were received regarding the definition of ''certain dangerous cargoes (CDCs)'' and how they were determined. CDCs have specific characteristics that make them a higher risk compared to the other cargoes listed in 49 CFR parts 171 and 172. The list of cargoes includes cargoes that have not been traditionally carried on the river but which are not prohibited from carriage. One comment addressed the inconsistency between the CDC definition of ammonium nitrate as stated in the temporary rule and the CDC definition as stated in 33 CFR 160.204, published February 28, 2003 in *Notification of Arrival in U.S. Ports* (68 FR 9537, 9544). The CDC list published in 33 CFR 160.204 applies to packaged cargoes listed in 49 CFR chapter I, subchapter C. As such, ammonium nitrate in bulk is currently not considered a CDC. The Coast Guard proposes to use the same definition as set out in 33 CFR 160.204 with the addition of propylene oxide.

Three comments received stated that the definitions of ''empty'', ''gas free''

and ''loaded'' were confusing and misleading. We agree. The proposed rule will apply to barges carrying CDCs or CDC residue and the terms ''empty'', ''gas free'' and ''loaded'' will no longer be used. We received one comment suggesting that the definition for ''final destination'' could be removed if the regulation section was amended to simply require a report upon dropping off a CDC barge at a fleeting area or facility. We agree and propose to remove the term ''final destination'' and have changed the regulation accordingly. We received two comments stating that the definition of ''operator'' is vague. We agree. We propose to change the word ''operator'' to ''towing vessel operator''. Towing vessel operator would be defined as ''Captain or pilot who is on watch.'' Also, we propose that a ''company representative'' or ''dispatcher'' may report the specific information required by the purpose of the rule to the IRVMC on behalf of the towing vessel operator or fleeting area manager.

Marine Chemist Certification. We received one comment regarding the use of a marine chemist to certify barges are ''gas free.'' As we stated in the preceding paragraph, the terms ''empty'', ''gas free'', and ''loaded'' are not used in this proposed rule. We have made the proposed rule applicable only to barges carrying CDCs or CDC residue. A barge is not carrying CDCs or CDC residue when it has either never carried CDCs or when it has been certified as ''gas free'' by a marine chemist.

Location and Number of Reporting Points. We received several comments related to the location and number of reporting points. One comment asked us why the RNA did not continue to, or beyond, New Orleans, Louisiana. The proposed RNA is the same as the regulated area in the temporary rule. The regulated area in the temporary rule does not extend below mile 235.0 on the Lower Mississippi River (Baton Rouge, Louisiana) because the NOA regulations published February 28, 2003, in the **Federal Register**, apply to all domestic barges carrying CDCs operating below mile 235.0 on the Lower Mississippi River. Making this proposed rule continue to, or beyond, New Orleans, Louisiana would result in duplicative reporting to the National Vessel Movement Center (NVMC) and the Inland River Vessel Movement Center (IRVMC). Therefore the location for the proposed RNA remains unchanged from the regulated area in the temporary rule currently in effect.

Three comments were received regarding several reporting points being located at a turn or in other hazardous areas of the waterway. The comments recommended changing the location of the reporting points. We agree. We have proposed to have a segment of the waterway serve as a reporting point (that is, the towing vessel operator would be required to report to the IRVMC when transiting upbound between mile 235.0 and mile 240.0 on the Lower Mississippi River). The proposed reporting points, based on recommendations from the waterway users, are reflected in table 165.821(e).

One comment recommended the reporting points should be the same for upbound and downbound. We agree, with the exception of seven reporting points, and the appropriate changes are reflected in the reporting points proposed in table 165.821(e).

Two comments recommended using the Captain of the Port (COTP) boundaries as reporting points because the COTP would be able to determine when a CDC barge enters and departs the zone, allowing for a reduction in the number of reporting points. We disagree. The IRVMC requires reporting within a COTP zone to monitor CDC barge movement through densely populated areas and other areas of concern. This information is disseminated to the appropriate COTP in which the CDC barge is located.

Fleeting Areas. We received two comments that the responsibility of reporting movements of CDC barges in fleeting areas was unclear. We agree and propose to change the regulatory text to specifically address CDC barges in fleeting areas. The Coast Guard proposes that fleeting managers or operators would not be required to report to the IRVMC when moving CDC barges within a fleet using a fleet towing vessel. However, they would be required to report to the IRVMC when a fleet towing vessel moves one or more CDC barges from one fleeting area to another fleeting area or to a facility. The Coast Guard also proposes to add the requirement that fleeting managers report all CDC barges in the fleeting area once a day to the IRVMC. This requirement has been determined to be necessary to ensure accountability for CDC barges located within fleeting areas in the RNA. A company representative or dispatcher would be allowed to report to the IRVMC on behalf of the fleeting area manager.

Need, Use and Validity of the Information Being Collected. We received three comments regarding the vagueness of the Coast Guard's need for the information being collected and how the Coast Guard intends to use this information. We also received one comment questioning how the Coast Guard intends to validate the information received.

The information to be collected in this proposed rule will be used for the same purposes as explained in the Collection of Information section of the temporary final rule—to enhance maritime domain awareness by tracking the movement of certain dangerous cargoes throughout the inland river system, and enable the Coast Guard to increase port safety and security and promote the uninterrupted flow of commerce within the Eighth Coast Guard District. The information will also be used to enhance maritime security, protect ports and facilities and high-density population centers (metropolitan areas), control vessel traffic, develop contingency plans, and enforce regulations.

The Coast Guard has used the information collected pursuant to the temporary final rule to maintain continuous maritime domain awareness on the inland rivers so that we may respond, as appropriate, to an actual or threatened terrorist action. We intend to validate the information received through random escorts of towing vessels with CDC barges as they transit the RNA. The Coast Guard will also address the validity of information as it explores the availability of information available from other sources that would tend to validate information reported to the Coast Guard.

Since the temporary RNA has been in effect the Coast Guard has re-evaluated the need for the information being reported to the IRVMC at the following times: (1) 4 hours prior to loading a barge with CDCs, (2) 4 hours prior to dropping off a CDC barge at a fleeting area, and (3) 4 hours prior to picking up one or more CDC barges from a fleeting area. The Coast Guard has determined that there is no longer a need for reporting to the IRVMC 4 hours prior to loading a barge with CDCs. However, the Coast Guard needs to know where a CDC barge is within the RNA at all times and proposes to change the conditions under which a report must be made to the IRVMC to: (1) Upon point of entry into the RNA with one or more CDC barges; (2) 4 hours prior to originating a voyage within the RNA with one or more CDC barges; (3) upon dropping off one or more CDC barges at a fleeting area or facility; (4) upon picking up one or more additional CDC barges from a fleeting area or facility; (5) upon moving one or more CDC barges from one fleeting area to another fleeting area; (6) once daily, report all CDC barges within a fleeting area; (7) at designated reporting points in table 165.821(e); (8) when estimated time of arrival (ETA) to a reporting point varies

by 6 hours from the previously reported ETA; (9) any significant deviation from previously reported information; (10) upon departing the RNA with one or more CDC barges; and (11) when directed by the IRVMC.

Availability of the Information From Other Sources. We received four comments on the availability of the information being collected from other sources. One comment mentioned that if we needed to know where the CDC barge was we would be able to request the data at any ''particular moment in time'' from the vessel operators or the Army Corps of Engineers. We agree that the Army Corps of Engineers collects adequate information from towing vessel operators and we are working with the Army Corps of Engineers to access that information. Once we are authorized to receive the information and the appropriate electronic systems are in place and tested, then we will re-evaluate the reporting points that coincide with the lock and dams (L&D). Until such time we are proposing to continue requiring information at reporting points that coincide with Army Corps of Engineer's L&Ds.

There was also discussion regarding the possibility of companies submitting real-time barge movement information to the Coast Guard via computer tracking programs in lieu of reporting to the Coast Guard at individual reporting points. A number of technology issues must be addressed in this area before this could be accomplished. Therefore, the Coast Guard proposes to maintain the manual collection of information from the reporting party in the interim rule while we continue to work with other government agencies and industry partners to research and develop alternatives to collecting the information necessary for the Coast Guard to maintain continual maritime domain awareness at any threat level.

Use of Technology. We received three comments regarding the use of technology to collect information by requiring electronic delivery of the information by automatic tracking devices and the web through real-time tracking programs. In response to these comments the Coast Guard is exploring existing systems used by affected companies for the possibility of integration of these systems. Before publishing the temporary final rule that established the existing RNA, the Coast Guard established the Inland River Vessel Movement Center (IRVMC), creating one location to which reports are to be made vice requiring reports to be made to each Captain of the Port (COTP) in which the CDC barge was operating. This proposed rule keeps the IRVMC in place, alleviating the burden on the towing vessel operator, responsible for a CDC barge, of having to determine which COTP zone they are operating in and maintaining a contact list for each COTP. The IRVMC accepts telephone (toll free), facsimile (toll free), and e-mail transmissions as means of reporting the information. Persons subject to this requirement may utilize the means that most efficiently meet their needs, provided that the information and timeliness requirements are met. The Coast Guard also has a reporting form and e-mail link available on the Internet at *http://www.uscg.mil/d8/Divs/M/IRVMC.htm.*

The Coast Guard proposes to continue receiving reports as required by the temporary rule. However, the Coast Guard proposes to consider and approve alternative methods, to be used by a reporting party, to meet any reporting requirements if: (1) The reporting party submits a written request for the alternative to Commander, Ninth Coast Guard District (m), 1240 E. Ninth Street, Cleveland, OH 44199; and (2) the alternative provides an equivalent level of reporting to that which would be achieved by the Coast Guard with the required check-in points.

Cost and Burden of the Reporting Requirements. We received several comments regarding the cost and burden of the reporting requirements. One comment mentioned that the preparation of reports for the Coast Guard by smaller or midsize companies that do not have 24-hour dispatchers adds to the daily workload of the mariner. We have added to the proposed regulatory text that alternative reporting may be requested from the Commander, Ninth Coast Guard District.

Two comments suggested that the Coast Guard could obtain this information from the Army Corps of Engineers rather than have separate reporting points for the Coast Guard thereby reducing the reporting burden. As stated earlier in this rule, we agree that the Army Corps of Engineers collects adequate information from the towing vessel operator and we are working with the Army Corps of Engineers to access the information. However in the interim, we are proposing to continue to use locks as reporting points.

Another suggestion was made to reduce the reporting requirements to a single report every 24 hours during periods of lower Maritime Security (MARSEC) levels, and, if the MARSEC level rose, the reporting requirements would be increased. However, this would not satisfy the Coast Guard's need to maintain constant maritime domain awareness for defined areas along the river systems, nor will it provide us timely information if the MARSEC level is increased due to a threat.

Justification of the Regulation. We received two comments concerning the justification for the regulation. One questioned why we implemented the RNA when we did; one questioned the justification for the timing of the RNA because we lowered the Maritime Security Condition (MARSEC) level the day the temporary RNA was effective; and another one questioned why the normal regulatory process of a notice of proposed rulemaking was not used. The effective date of the RNA and the change in the MARSEC level were coincidental. As a component of the Department of Homeland Security, the Coast Guard has a responsibility to ensure the safety and security of our ports and waterways. The temporary RNA and the proposed RNA will allow the Coast Guard to maintain constant maritime domain awareness on the inland rivers.

Response to Comments Summary

In response to these comments the Coast Guard is (1) removing the requirement to report 4 hours prior to loading a CDC barge in the RNA; (2) removing the requirement of reporting 4 hours prior to dropping off a CDC barge at a fleeting area; (3) establishing reporting requirements specifically for fleeting area managers; (4) considering and approving requests for alternative methods of meeting reporting requirements; (5) amending or removing some reporting points that were in unsafe areas; (6) exploring a reduction in checkpoints on pooled rivers by using Army Corps of Engineers data from L&Ds; (7) researching existing systems employed by affected companies with the possibility of the integration of these systems; and (8) researching technology for automatic tracking of CDC barges.

Discussion of Proposed Rule

The Coast Guard proposes to establish a regulated navigation area for the Illinois Waterway System above mile 187.2 to the Chicago Lock on the Chicago River at mile 326.7, and to the confluence of the Calumet River and Lake Michigan at mile 333.5 of the Calumet River. This proposed rule applies to: (1) towing vessel operators responsible for one or more CDC barges within the regulated area, and (2) fleeting area managers responsible for CDC barges in a fleeting area. The terms barge, certain dangerous cargoes (CDCs), downbound, CDC barge, Ninth Coast

Guard District, towing vessel operator, and upbound are defined in the regulatory section of this proposed rule.

Towing vessel operators responsible for one or more CDC barges would be required to report specific information, to the IRVMC, under the following conditions: (1) Upon point of entry into the RNA with one or more CDC barges; (2) 4 hours prior to originating a voyage within the RNA with one or more CDC barges; (3) upon dropping off one or more CDC barges at a fleeting area or facility; (4) upon picking up one or more additional CDC barges from a fleeting area or facility; (5) at designated reporting points in table 165.821(e); (6) when estimated time of arrival (ETA) to a reporting point varies by 6 hours from the previously reported ETA; (7) any significant deviation from previously reported information; (8) upon departing the RNA with one or more CDC barges; and (9) when directed by the IRVMC.

Fleeting area managers would be required to report specific information to the IRVMC under the following conditions: (1) Once daily, report all CDC barges within the fleeting area; (2) upon moving a CDC barge from one fleeting area to another or to a facility by fleeting towing vessels; (3) any significant deviation from previously reported information; and (4) when directed by the IRVMC.

A company representative or dispatcher may report the required information to the IRVMC on behalf of the towing vessel operator or fleeting area manager.

Each report made to the IRVMC, by a towing vessel operator or fleeting area manager, must contain all the information items specified in tables 165.921(f) and 165.921(g), respectively.

Reports must be made to the IRVMC, either by telephone to (866) 442–6089, by fax to (866) 442–6107, or by e-mail to *irvmc@cgstl.uscg.mil*. A reporting form and e-mail link is available at *http://www.uscg.mil/d8/Divs/M/IRVMC.htm*.

The Coast Guard proposes to consider and approve alternative reporting methods to meet any reporting requirements if: (1) The request for the alternative is submitted in writing to Commander, Ninth Coast Guard District (m), 1240 E. Ninth Street, Cleveland, Ohio 44199; and (2) the alternative provides an equivalent level of reporting to that which would be achieved by the Coast Guard with the required check-in points.

Deviation from this rule is prohibited unless specifically authorized by the Commander, Ninth Coast Guard District or designated representatives.

Regulatory Evaluation

This proposed rule is not a ''significant regulatory action'' under section 3(f) of Executive Order 12866, Regulatory Planning and Review, and does not require an assessment of potential costs and benefits under section 6(a)(3) of that Order. The Office of Management and Budget has not reviewed it under that Order. It is not ''significant'' under the regulatory policies and procedures of the Department of Homeland Security (DHS).

We expect the economic impact of this proposed rule to be so minimal that a full Regulatory Evaluation under the regulatory policies and procedures of DHS is unnecessary. We present this Regulatory Evaluation for the purposes of information.

Evaluation. The regulatory baseline for this rule is the temporary rule. The cost for complying with the rule will differ depending on the means used to make a report to the IRVMC and the type of report, either an initial report or an update. The cost of the rule presented below is based on the average number of reports received by the IRVMC in April 2003 and May 2003.

ANNUAL COST AND BENEFIT OF THE PROPOSED RULE

[2003 Dollars]

Item	Cost per initial call	Cost per update call	Total
Personnel	$9462	$17,871	$27,333
Operating Expenses	$28,386	$53,613	$81,999
Total	$37,848	$71,484	$109,332

This cost estimate assumes: (1) The average merchant mariner's hourly rate is $30, (2) the average initial call is 6 minutes, (3) the average update call is 2 minutes, (4) the average cost per cell phone call is $1.50 per minute, and (5) 15 percent of all responses are initial reports to the IRVMC. Therefore, based on 177 respondents, the average cost is $618 per CDC barge per year. The reporting requirements proposed are necessary to provide immediate, improved security for the public, vessels, and U.S. ports and waterways. The requirements do not alter normal barge transits. The minimal hardships that may be experienced by persons or vessels, as a result of this rule, are necessary to the national interest in protecting the public, vessels, and vessel crews from the devastating consequences of acts of terrorism, and from sabotage or other subversive acts, accidents, or other causes of a similar nature.

Small Entities

Under the Regulatory Flexibility Act (5 U.S.C. 601–612), we have considered whether this proposed rule would have a significant economic impact on a substantial number of small entities. The term ''small entities'' comprises small businesses, not-for-profit organizations that are independently owned and operated and are not dominant in their fields, and governmental jurisdictions with populations of less than 50,000.

The Coast Guard certifies under 5 U.S.C. 605(b) that this proposed rule would not have a significant economic impact on a substantial number of small entities. This rule will affect the following entities, some of which may be small entities: towing vessel operators and fleeting area managers responsible for CDCs barges on Illinois Waterway System within the Ninth Coast Guard District. This RNA will not have a significant economic impact on a substantial number of small entities because this rule does not require any alteration of barge operations or transits. The operational communications required by this RNA do not require towing vessel operators or fleeting area managers to obtain new equipment, and can be made toll free to the IRVMC.

If you think that your business, organization, or governmental jurisdiction qualifies as a small entity and that this rule would have a significant economic impact on it, please submit a comment (see **ADDRESSES**) explaining why you think it

qualifies and how and to what degree this rule would economically affect it.

Assistance for Small Entities

Under section 213(a) of the Small Business Regulatory Enforcement Fairness Act of 1996 (Pub. L. 104–121), we want to assist small entities in understanding this proposed rule so that they can better evaluate its effects on them and participate in the rulemaking. If the rule would affect your small business, organization, or governmental jurisdiction and you have questions concerning its provisions or options for compliance, please contact CDR Michael Gardiner, Project Manager for Commander, Ninth Coast Guard District, 1240 E. 9th Street, Cleveland, Ohio 44199, telephone (216) 902–6049.

Collection of Information

This proposed rule would call for a collection of information under the Paperwork Reduction Act of 1995 (44 U.S.C. 3501–3520.). As defined in 5 CFR 1320.3(c), ''collection of information'' comprises reporting, recordkeeping, monitoring, posting, labeling, and other, similar actions. The title and description of the information collection, a description of those who must collect the information, and an estimate of the total annual burden follow. The estimate covers the time for reviewing instructions, searching existing sources of data, gathering and maintaining the data needed, and completing and reviewing the collection.

This proposed rule revises an existing OMB-approved collection of information (1625–0105). The new collection of information estimate is based on data gathered as a result of the information collected under the temporary rule and is based on actual reports received by the IRVMC, as well as actual observation and tracking, for April 2003 and May 2003.

Title: Regulated Navigation Areas; Reporting Requirements for Barges Loaded with Certain Dangerous Cargoes, Inland Rivers, Eighth Coast Guard District and the Illinois Waterway, Ninth Coast Guard District.

OMB Control Number: 1625–0105.

Summary of the Collection of Information: The Coast Guard requires position and intended movement reporting, and fleeting operations reporting, from barges carrying CDCs in the inland rivers within the Eighth and Ninth Coast Guard Districts. This rule will amend 33 CFR part 165 to require:

Towing vessel operators and fleeting area managers responsible for CDC barges must report the following information via toll free telephone, toll free fax, or email:

a. Name of barge and towboat;
b. Name of fleeting area and facility;
c. Estimated time of arrival (ETA) at fleeting area and facility;
d. Planned route, including estimated time of departure (ETD) from fleeting area and facility;
e. Upon entry into the covered geographical area;
f. 4 hours prior to originating a voyage with a CDC within the RNA
g. Upon picking up an additional CDC barge from a fleeting area or facility
h. Upon dropping off a CDC barge at a fleeting area or facility,
i. Upon moving a CDC barge from one fleeting area to another fleeting area or facility;
j. Once daily, all CDC barges within a fleeting area
k. ETA at approximately 105 designated reporting points within the covered geographical area;
l. At any time ETA to a reporting point varies by 6 hours from the previously reported ETA;
m. any significant deviation from previously reported information;
n. Upon departing the covered geographical area; and
o. When directed by the Coast Guard.

A company representative or dispatcher may report to the IRVMC on behalf of a towing vessel operator or fleeting area manager.

Need for Information: To ensure port safety and security and to ensure the uninterrupted flow of commerce, the Coast Guard proposes to issue regulations requiring position and intended movement reporting and fleeting operations reporting, from barges carrying CDCs in the inland rivers within the Eighth and Ninth Coast Guard Districts.

Proposed Use of Information: The information is required to enhance maritime security, protect ports and facilities and high-density population centers (metropolitan areas), control vessel traffic, develop contingency plans, and enforce regulations. The Coast Guard has used the information to maintain continuous maritime domain awareness on the inland rivers so that we may respond as appropriate to an actual or threatened terrorist action and enhance maritime security by boarding and/or escorting CDC barges in the vicinity of high-density population areas.

Description of the Respondents: The respondents are owners, agents, masters, towing vessel operators, or persons in charge of barges loaded with CDCs or having CDC residue operating on the inland rivers located within the Eighth and Ninth Coast Guard Districts.

Number of Respondents: The existing OMB-approved collection number of respondents is 3,505. This proposed rule will decrease the number of respondents by 3,328 to a total of 177.

Frequency of Response: Towing vessel operators moving barges carrying CDCs or CDC residue will submit reports as necessary. The existing OMB-approved collection annual number of responses is 7,711. This proposed rule will increase the number of responses by 13,313 to a total of 21,024.

Burden of Response: The existing OMB-approved collection burden of response is 15 minutes (0.25 hours) (burden of response is the time required to complete the paperwork requirements of the rule for a single response). This proposed rule will decrease the burden of response by 9 minutes (0.15 hours) to a total of 6 minutes (0.10 hours).

Estimate of Total Annual Burden: The existing OMB-approved collection total annual burden is 1,928 hours (total annual burden is the time required to complete the paperwork requirements of the rule for all responses). This proposed rule will decrease the total annual burden by 1017 hours to a total of 911 hours.

As required by the Paperwork Reduction Act of 1995 (44 U.S.C. 3507(d)), we have submitted a copy of this rule to the Office of Management and Budget (OMB) for its review and approval of the revised collection of information. The existing OMB-approved collection (1625–1505) expires on October 31, 2003.

We ask for public comment on the collection of information to help us determine how useful the information is, whether it can help us perform our functions better, whether it is readily available elsewhere, how accurate our estimate of the burden of collection is, how valid our methods for determining burden are, how we can improve the quality, usefulness, and clarity of the information, and how we can minimize the burden of collection.

If you submit comments on the collection of information, submit them both to OMB and to the Docket Management Facility where indicated under **ADDRESSES**, by the date under **DATES**.

You need not respond to a collection of information unless it displays a currently valid control number from OMB. If OMB does not approve this revised collection of information, we will publish a notice in the **Federal Register** of OMB's decision.

Federalism

A rule has implications for federalism under Executive Order 13132, Federalism, if it has a substantial direct effect on State or local governments and would either preempt State law or

impose a substantial direct cost of compliance on them. We have analyzed this proposed rule under that Order and have determined that it does not have implications for federalism.

Unfunded Mandates Reform Act

The Unfunded Mandates Reform Act of 1995 (2 U.S.C. 1531–1538) requires Federal agencies to assess the effects of their discretionary regulatory actions. In particular, the Act addresses actions that may result in the expenditure by a State, local, or tribal government, in the aggregate, or by the private sector of $100,000,000 or more in any one year. Though this proposed rule would not result in such an expenditure, we do discuss the effects of this rule elsewhere in this preamble.

Taking of Private Property

This proposed rule would not affect a taking of private property or otherwise have taking implications under Executive Order 12630, Governmental Actions and Interference with Constitutionally Protected Property Rights.

Civil Justice Reform

This proposed rule meets applicable standards in sections 3(a) and 3(b)(2) of Executive Order 12988, Civil Justice Reform, to minimize litigation, eliminate ambiguity, and reduce burden.

Protection of Children

We have analyzed this proposed rule under Executive Order 13045, Protection of Children from Environmental Health Risks and Safety Risks. This rule is not an economically significant rule and would not create an environmental risk to health or risk to safety that might disproportionately affect children.

Indian Tribal Governments

This proposed rule does not have tribal implications under Executive Order 13175, Consultation and Coordination with Indian Tribal Governments, because it would not have a substantial direct effect on one or more Indian tribes, on the relationship between the Federal Government and Indian tribes, or on the distribution of power and responsibilities between the Federal Government and Indian tribes.

Energy Effects

We have analyzed this proposed rule under Executive Order 13211, Actions Concerning Regulations That Significantly Affect Energy Supply, Distribution, or Use. We have determined that it is not a ''significant energy action'' under that order because it is not a ''significant regulatory action'' under Executive Order 12866 and is not likely to have a significant adverse effect on the supply, distribution, or use of energy. The Administrator of the Office of Information and Regulatory Affairs has not designated it as a significant energy action. Therefore, it does not require a Statement of Energy Effects under Executive Order 13211.

Environment

We have analyzed this rule under Commandant Instruction M16475.1D, which guides the Coast Guard in complying with the National Environmental Policy Act of 1969 (NEPA) (42 U.S.C. 4321–4370f), and have concluded that there are no factors in this case that would limit the use of categorical exclusion under section 2.B.2 of the Instruction. Therefore, this rule is categorically excluded, under figure 2–1 paragraph (34)(g), of the instruction, from further environmental documentation because this rule is not expected to result in any significant environmental impact as described in NEPA. A draft ''Environmental Analysis Check List'' and a draft ''Categorical Exclusion Determination'' are available where indicated under **ADDRESSES.** Comments on this section will be considered before we make a final decision on whether to categorically exclude this rule from further environmental review.

List of Subjects in 33 CFR Part 165

Harbors, Marine safety, Navigation (water), Reporting and recordkeeping requirements, Security measures, Vessels, Waterways.

For the reasons discussed in the preamble, the Coast Guard proposed to amend 33 CFR part 165 as follows:

PART 165—REGULATED NAVIGATION AREAS AND LIMITED ACCESS AREAS

1. The authority citation for part 165 continues to read as follows:

Authority: 33 U.S.C. 1226, 1231; 46 U.S.C. Chapter 701; 50 U.S.C. 191,195; 33 CFR 1.05–1(g), 6.04–1, 6.04–6, and 160.5; Pub. L. 107–295, 166 Stat. 2064; Department of Homeland Security Delegation No. 0170.1.

2. Add § 165.921 to read as follows:

§ 165.921 Regulated Navigation Area; Reporting Requirements for Barges Loaded with Certain Dangerous Cargoes, Illinois Waterway System, Ninth Coast Guard District.

(a) *Regulated Navigation Area.* The following waters are a Regulated Navigation Area (RNA): the Illinois Waterway System above mile 187.2 to the Chicago Lock on the Chicago River at mile 326.7 and to the confluence of the Calumet River and Lake Michigan at mile 333.5 of the Calumet River.

(b) *Applicability.* This section applies to towing vessel operators and fleeting area managers responsible for CDC barges in the RNA. This section does not apply to:

(1) Towing vessel operators responsible for barges not carrying CDCs barges, or

(2) Towing vessel operators moving one or more CDC barges within a fleeting area.

(c) *Definitions.* As used in this section—*Barge* means a non-self propelled vessel engaged in commerce, as set out in 33 CFR 160.204.

Certain Dangerous Cargo or *(CDC)* includes any of the following:

(1) Division 1.1 or 1.2 explosives as defined in 49 CFR 173.50.

(2) Division 1.5D blasting agents for which a permit is required under 49 CFR 176.415 or, for which a permit is required as a condition of a Research and Special Programs Administration exemption.

(3) Division 2.3 ''poisonous gas'', as listed in 49 CFR 172.101 that is also a ''material poisonous by inhalation'' as defined in 49 CFR 171.8, and that is in a quantity in excess of 1 metric ton per barge.

(4) Division 5.1 oxidizing materials for which a permit is required under 49 CFR 176.415 or, for which a permit is required as a condition of a Research and Special Programs Administration exemption.

(5) A liquid material that has a primary or subsidiary classification of Division 6.1 ''poisonous material'' as listed in 49 CFR 172.101 that is also a ''material poisonous by inhalation'', as defined in 49 CFR 171.8 and that is in a bulk packaging, or that is in a quantity in excess of 20 metric tons per barge when not in a bulk packaging.

(6) Class 7, ''highway route controlled quantity'' radioactive material or ''fissile material, controlled shipment'', as defined in 49 CFR 173.403.

(7) Bulk liquefied chlorine gas and Bulk liquefied gas cargo that is flammable and/or toxic and carried under 46 CFR 154.7.

(8) The following bulk liquids—

(i) Acetone cyanohydrin,

(ii) Allyl alcohol,

(iii) Chlorosulfonic acid,

(iv) Crotonaldehyde,

(v) Ethylene chlorohydrin,

(vi) Ethylene dibromide,

(vii) Methacrylonitrile,

(viii) Oleum (fuming sulfuric acid), and

(ix) Propylene Oxide.

CDC barge means a barge containing CDCs or CDC residue.

Downbound means the tow is traveling with the current.

Inland River Vessel Movement Center or *(IRVMC)* means the Coast Guard office that is responsible for collecting the information required by this section.

Ninth Coast Guard District means the Coast Guard District as set out in 33 CFR part 3.45–1.

Towing vessel operator means the Captain or pilot who is on watch.

Upbound means the tow is traveling against the current.

(d) *Regulations.* The following must report to the Inland River Vessel Movement Center (IRVMC):

(1) The towing vessel operator responsible for one or more CDC barges in the RNA must report all the information items specified in table 165.921(f), in paragraph (f) of this section, to the Inland River Vessel Movement Center (IRVMC):

(i) Upon point of entry into the RNA with one or more CDC barges;

(ii) Four hours before originating a voyage within the RNA with one or more CDC barges;

(iii) Upon dropping off one or more CDC barges at a fleeting area or facility;

(iv) Upon picking up one or more additional CDC barges from a fleeting area or facility;

(v) At designated reporting points, set forth in table 165.921(e), in paragraph (e) of this section;

(vi) When the estimated time of arrival (ETA) to a reporting point varies by 6 hours from the previously reported ETA;

(vii) Any significant deviation from previously reported information;

(viii) Upon departing the RNA with one or more CDC barges; and

(ix) When directed by the IRVMC.

(2) The fleeting area manager responsible for one or more CDC barges in the RNA must report all the information items specified in table 165.921(g), in paragraph (g) of this section, to the Inland River Vessel Movement Center (IRVMC):

(i) Once daily, report all CDC barges within the fleeting area;

(ii) Upon moving one or more CDC barges from one fleeting area to another fleeting area or facility by a fleet tow boat;

(iii) Any significant deviation from previously reported information; and

(iv) When directed by the IRVMC.

(3) Reports required by this section may be made by a company representative or dispatcher on behalf of the towing vessel operator or fleeting area manager.

(4) Reports required by this section must be made to the IRVMC either by telephone to (866) 442–6089, by fax to (866) 442–6107, or by e-mail to *irvmc@cgstl.uscg.mil.* A reporting form and e-mail link are available at *http://www.uscg.mil/d8/Divs/M/IRVMC.htm.*

(5) The general regulations contained in 33 CFR 165.13 apply to this section.

(e) *Ninth Coast Guard District Illinois Waterway System RNA Reporting points.* Towing vessel operators responsible for one or more CDC barges in the RNA must make reports to the Inland River Vessel Movement Center at each point listed in table 165.921(e) of this paragraph.

TABLE 165.921(e).—NINTH COAST GUARD DISTRICT ILLINOIS WATERWAY SYSTEM REPORTING POINTS

(1) Illinois River (ILR) Upbound, at Mile Markers (M) and when Departing Lock & Dam (L&D):
- (i) M 187.2 (Southern Boundary MSO Chicago AOR)
- (ii) M 271.5 Dresden L&D
- (iii) M 291 Lockport L&D
- (iv) M 303.5 Junction of Chicago Sanitary Ship Canal and
- (v) Calumet-Sag Channel
- (vi) M 326.4 Thomas S. O'Brien L&D, Calumet River
- (vii) M 333.5 Confluence of Calumet River and Lake Michigan
- (viii) M 326.7 Chicago L&D, Chicago River

(2) Illinois River (ILR) Downbound Reporting Points, at Mile Markers (M) and when Departing Lock & Dam (L&D):
- (i) M 326.7 Chicago L&D, Chicago River
- (ii) M 333.5 Confluence of Calumet River and Lake Michigan
- (iii) M 326.4 Thomas S. O'Brien L&D, Calumet River
- (iv) M 303.5 Junction of Chicago Sanitary Ship Canal and
- (v) Calumet-Sag Channel
- (vi) M 291 Lockport L&D
- (vii) M 271.5 Dresden L&D
- (viii) M 187.2 (Southern Boundary MSO Chicago AOR)

(f) *Information to be reported by towing vessel operators to the Inland River Vessel Movement Center.* Towing vessel operators responsible for one or more CDC barges in the RNA must report all the information required by this section, as set out in table 165.921(f) of this paragraph.

TABLE 165.921(f).—INFORMATION TO BE REPORTED TO THE INLAND RIVER VESSEL MOVEMENT CENTER (IRVMC) BY TOWING VESSEL OPERATORS

	24 hr contact No.	Name of vessel moving the barge(s)	Barge(s) name and official number	Type, name and amount of CDC onboard	Estimated time of departure from the fleeting area or facility	Planned route, name and location of destination of CDC barge (fleeting area or facility), including estimated time of arrival	Reporting point	Estimated time of arrival (ETA) to next reporting point (If applicable)
(1) Upon point of entry into the RNA with a CDC barge.	X	X	X	X	.....	X	X	X

TABLE 165.921(f).—INFORMATION TO BE REPORTED TO THE INLAND RIVER VESSEL MOVEMENT CENTER (IRVMC) BY TOWING VESSEL OPERATORS—Continued

	24 hr contact No.	Name of vessel moving the barge(s)	Barge(s) name and official number	Type, name and amount of CDC onboard	Estimated time of departure from the fleeting area or facility	Planned route, name and location of destination of CDC barge (fleeting area or facility), including estimated time of arrival	Reporting point	Estimated time of arrival (ETA) to next reporting point (If applicable)
(2) Four hours before originating a voyage within the RNA with one or more CDC barges.	X	X	X	X	X	X	.....	X
(3) Upon dropping off one or more CDC barges at a fleeting area or facility.	.....	X	X	.....	.....	.....	.....	.....
(4) Upon picking up one or more additional CDC barges from a fleeting area or facility.	.....	X	X	X	.....	.....	.....	.....
(5) At designated reporting points in table 165.921(e).	.....	X	X	If changed	.....	If changed	X	X
(6) When ETA to a reporting point varies by 6 hours from previously reported ETA.	.....	X	If changed	If changed	.....	.....	.....	X
(7) Any significant deviation from previously reported information (all that apply).	X	X	X	X	X	X	X	X
(8) Upon departing the RNA with a CDC barge(s).	.....	X	X	.....	.....	.....	X	.....
(9) When directed by the IRVMC	X	X	X	X	X	X	X	X

(g) *Information to be reported to the Inland River Vessel Movement Center by fleeting area managers.* Fleeting area managers responsible for one or more CDC barges in the RNA must report the information required by this section, as set out in table 165.921(g) to this paragraph.

TABLE 165.921(g).—INFORMATION TO BE REPORTED TO THE INLAND RIVER VESSEL MOVEMENT CENTER (IRVMC) BY FLEETING AREA MANAGERS

	24 hr contact No.	Barge(s) name and official No.	Type, name and amount of CDC onboard	Location of CDC barge (fleeting area or facility)
(1) Once daily, all CDC barges in a fleeting area	X	X	X	X
(2) Upon moving one or more CDC barges from one fleeting area to another fleeting area or facility, by a fleet tow boat.	.....	X	X	X
(3) Any significant deviation from previously reported information (all that apply)	X	X	X	X
(4) When directed by the IRVMC	X	X	X	X

(h) *Alternative reporting.* The Ninth Coast Guard District Commander may consider and approve alternative methods to be used by a reporting party to meet any reporting requirements if:

(1) The request is submitted in writing to Commander, Ninth Coast Guard District (m), 1240 E. 9th Street, Cleveland, Ohio 44199; and

(2) The alternative provides an equivalent level of the reporting that which would be achieved by the Coast Guard with the required check-in points.

(i) Deviation from this section is prohibited unless specifically authorized by the Commander, Ninth Coast Guard District or the IRVMC.

Dated: July 21, 2003.

Ronald F. Silva,

Rear Admiral, Coast Guard, Commander, Ninth Coast Guard District.

[FR Doc. 03–19362 Filed 7–25–03; 3:55 pm]

BILLING CODE 4910–15–P

ENVIRONMENTAL PROTECTION AGENCY

40 CFR Part 52

[TX–164–1–7602b; FRL–7536–7]

Approval and Promulgation of Implementation Plans; Texas; Control of Emission of Oxides of Nitrogen From Cement Kilns

AGENCY: Environmental Protection Agency (EPA).

ACTION: Proposed rule.

SUMMARY: The EPA is proposing to take direct final action on revisions to the Texas State Implementation Plan. These revisions concern Control of Air Pollution from Nitrogen Compounds, Cement Kilns. The EPA is approving these SIP revisions for cement kilns as they will contribute to attainment of the 1-hour ozone National Ambient Air Quality Standards. The EPA is approving emissions of Oxides of Nitrogen for cement kilns in accordance with the requirements of the Federal Clean Air Act.

In the ''Rules and Regulations'' section of this **Federal Register**, EPA is approving the State's SIP revision as a direct final rule without prior proposal because the EPA views this as a noncontroversial revision and anticipates no adverse comment. The EPA has explained its reasons for this approval in the preamble to the direct

final rule. If EPA receives no relevant adverse comments, the EPA will not take further action on this proposed rule. If EPA receives relevant adverse comment, EPA will withdraw the direct final rule and it will not take effect. The EPA will address all public comments in a subsequent final rule based on this proposed rule. The EPA will not institute a second comment period on this action. Any parties interested in commenting must do so at this time. Electronic comments should be sent either to *Diggs.Thomas@epa.gov* or to *http://www.regulations.gov,* which is an alternative method for submitting electronic comments to EPA. To submit comments, please follow the detailed instructions described in our direct final rulemaking document published in the ''Rules and Regulations'' section of this **Federal Register**. Our Technical Support Document for this rule revision contains more information about this action.

DATES: Written comments must be received by August 29, 2003.

ADDRESSES: Written comments should be addressed to Mr. Thomas H. Diggs, Chief, Air Planning Section (6PD–L), at the EPA Region 6 Office listed below. Copies of documents relevant to this action are available for public inspection during normal business hours at the following locations. Anyone wanting to examine these documents should make an appointment with the appropriate office at least two working days in advance.

Environmental Protection Agency, Region 6, Air Planning Section (6PD–L), 1445 Ross Avenue, Dallas, Texas 75202–2733.

Texas Commission on Environmental Quality (TCEQ), Office of Air Quality, 12124 Park 35 Circle, Austin, Texas 78753.

FOR FURTHER INFORMATION CONTACT: Mr. Alan Shar, Air Planning Section (6PD–L), EPA Region 6, 1445 Ross Avenue, Dallas, Texas 75202–2733, telephone (214) 665–6691, and *shar.alan@epa.gov.*

SUPPLEMENTARY INFORMATION: This document concerns Control of Air Pollution from nitrogen compounds, Cement kiln, Environmental protection, Intergovernmental relations, Reporting and recordkeeping requirements, Volatile organic compounds. For further information, please see the information provided in the direct final action that is located in the ''Rules and Regulations'' section of this **Federal Register** publication.

Authority: 42 U.S.C. 7401 *et seq.*

Dated: July 17, 2003.

Lawrence Starfield,

Acting Regional Administrator, Region 6.

[FR Doc. 03–19278 Filed 7–29–03; 8:45 am]

BILLING CODE 6560–50–P

ENVIRONMENTAL PROTECTION AGENCY

40 CFR Parts 52 and 81

[ID–02–003; FRL –7537–8]

Approval and Promulgation of State Implementation Plans and Designation of Areas for Air Quality Planning Purposes: Ada County/Boise, ID Area

AGENCY: Environmental Protection Agency.

ACTION: Proposed rule.

SUMMARY: The Environmental Protection Agency (EPA, Agency, or we) proposes to rescind its earlier finding that the PM_{10} standards promulgated on July 1, 1987 and the accompanying nonattainment designation and classification are no longer applicable in the Ada County/Boise, Idaho area, and simultaneously, to approve a PM_{10} SIP maintenance plan for the Ada County/Boise Idaho area and to redesignate the area from nonattainment to attainment. PM_{10} air pollution is suspended particulate matter with a diameter less than or equal to a nominal ten micrometers.

DATES: Written comments must be received on or before August 29, 2003.

ADDRESSES: Written comments should be addressed and mailed to Donna Deneen, Office of Air Quality, (OAQ–107), EPA Region 10, 1200 Sixth Avenue, Seattle, Washington, 98101. Copies of documents relevant to this action are available for public review during normal business hours (8 a.m. to 4:30 p.m.) at this same address. Comments may also be submitted electronically, or through hand delivery/courier. Detailed instructions for submitting comments are described in the **SUPPLEMENTARY INFORMATION** section, under ''How can comments be made on this rulemaking?''

FOR FURTHER INFORMATION CONTACT: Donna Deneen, Office of Air Quality (OAQ–107), EPA Region 10, 1200 Sixth Avenue, Seattle, Washington, 98101, (206) 553–6706.

SUPPLEMENTARY INFORMATION:

Table of Contents

I. Background
1. What is the purpose of this rulemaking?
2. What is a State Implementation Plan (SIP)?
3. What National Ambient Air Quality Standards (NAAQS) are considered in today's rulemaking?
4. What is the background information for this action?
5. What are the air quality characteristics of the area?
6. What criteria did EPA use to review the redesignation request and maintenance plan?
7. How does the State show that the area has attained the PM_{10} NAAQS?
8. Does the area have a fully approved nonattainment SIP?
9. Are the improvements in air quality which warrant this redesignation permanent and enforceable?
10. Has the State met all the planning requirements applicable to this area?
11. How does the State meet Section 110 requirements?
12. How does the State meet Part D requirements?
13. How does the State meet the Section 172(c) plan provisions requirements?
14. How does the State meet Subpart 4 requirements?
15. Has the State submitted a fully approvable maintenance plan for the area?
16. How has the State met the attainment year emission inventory requirement?
17. How does the State demonstrate maintenance of the PM_{10} standards in the future?
18. How will the State monitor air quality to verify continued attainment?
19. What contingency measure will the State rely upon to correct any future violation of the NAAQS?
20. How does this action affect Transportation Conformity?
II. How Can Comments Be Made on This Rulemaking?
III. Statutory and Executive Order Reviews

I. Background

1. What Is the Purpose of This Rulemaking?

This rulemaking proposes to take certain actions related to the PM_{10} designation and classification of the Ada County/Boise, Idaho area.[1] First, EPA is proposing to rescind the March 12, 1999 finding (64 FR 12257) that the PM10 standards promulgated on July 1, 1987 (52 FR 24634) and the accompanying designation and classification for PM_{10} no longer apply in the Ada County/Boise, Idaho area. The intended effect of this proposal is to restore the applicability of the current PM_{10} standards in the Ada County/Boise, Idaho area as well as the nonattainment designation and moderate classification associated with those standards. Secondly, EPA is proposing to approve the PM_{10}

[1] Although the State's maintenance plan and redesignation request refers to ''Northern Ada County,'' we are using the term ''Ada County/Boise, Idaho'' or ''Ada County/Boise, Idaho area'' for consistency with 40 CFR 81.313.

maintenance plan for the Ada County/Boise, Idaho area as a SIP revision and to redesignate the area to ''attainment'' for PM_{10}.

The proposed redesignation to attainment is based on valid monitoring data and projections of ambient air quality made in the demonstration that accompanies the maintenance plan. EPA believes the area will continue to meet the National Ambient Air Quality Standards (NAAQS) for PM_{10} for at least ten years beyond this redesignation, as required by the Act.

2. What Is a State Implementation Plan (SIP)?

The Clean Air Act requires states to attain and maintain ambient air quality equal to or better than standards that provide an adequate margin of safety for public health and welfare. These ambient air quality standards are established by EPA and are known as the National Ambient Air Quality Standards, or NAAQS.

The state's plans for attaining and maintaining the NAAQS are outlined in the State Implementation Plan (or SIP) for that state. The SIP is a planning document that, when implemented, is designed to ensure the achievement of the NAAQS. Each state currently has a SIP in place, and the Act requires that states make SIP revisions periodically as necessary to provide continued compliance with the standards.

SIPs include, among other things, the following: (1) An inventory of emission sources; (2) statutes and regulations adopted by the state legislature and executive agencies; (3) air quality analyses that include demonstrations that adequate controls are in place to meet the NAAQS; and (4) contingency measures to take effect if an area fails to attain the standards or to make reasonable progress toward attainment by the required date.

The state must make the SIP available for public review and comment through a public hearing. It also must be adopted by the state, and submitted to EPA by the Governor or his appointed designee. After EPA approves the SIP submission, the rules and regulations are rendered federally enforceable. The approved SIP serves as the state's plan to take actions that will reduce or eliminate air quality problems. Any subsequent revisions to the SIP must go through the formal SIP revision process specified in the Act.

The Idaho Department of Environmental Quality (Idaho DEQ, the State, or Idaho) submitted a SIP for particulate matter in the Ada County/Boise, Idaho nonattainment area in three parts on November 14, 1991, December 30, 1994, and July 13, 1995 (the 1991 PM_{10} SIP) and EPA approved it on May 30, 1996. Other SIP revisions, *e.g.*, statewide revisions affecting the area, have been submitted over the intervening years and have likewise been approved. See 40 CFR 52.670. The State submitted the maintenance plan and redesignation request for the Ada County/Boise, Idaho area to EPA on September 27, 2002, and provided supplemental information on July 10, 2003 and July 21, 2003, as a revision to the SIP.

3. What National Ambient Air Quality Standards (NAAQS) Are Considered in Today's Rulemaking?

This action by EPA pertains to Idaho's compliance with the PM_{10} NAAQS. PM_{10} is particulate matter with an aerodynamic diameter of less than ten micrometers (PM_{10}). The NAAQS are national standards for certain ambient air pollutants set by EPA to protect public health and welfare. PM_{10} is among the ambient air pollutants for which EPA has established health-based standards.

PM_{10} causes adverse health effects by penetrating deep in the lungs, aggravating the cardiopulmonary system. Children, the elderly, and people with asthma and heart conditions are the most vulnerable.

On July 1, 1987 (52 FR 24634), EPA revised the NAAQS for particulate matter with an indicator that includes only those particles with an aerodynamic diameter less than or equal to a nominal 10 micrometers (PM_{10}). (*See* 40 CFR 50.6). The 24-hour primary PM_{10} standard is 150 micrograms per cubic meter (ug/m^3), with no more than one expected exceedance per year over a three year period. The annual primary PM_{10} standard is 50 ug/m^3 as an expected annual arithmetic mean over a three year period. The secondary PM10 standards, promulgated to protect against adverse welfare effects, are identical to the primary standards.

4. What Is the Background Information for This Action?

On August 7, 1987 (52 FR 29383), EPA identified the Ada County/Boise, Idaho area as a $PM1_{10}$ ''Group I'' area of concern, *i.e.*, an area with a 95% or greater likelihood of violating the PM_{10} NAAQS and requiring substantial SIP revisions. The area was subsequently designated as a moderate PM_{10} nonattainment area upon enactment of the Clean Air Act Amendments of 1990 (November 15, 1990).

The State developed a nonattainment area SIP revision designed to bring about the attainment of the PM_{10} NAAQS. This was submitted to EPA in three parts on November 14, 1991, December 30, 1994, and July 13, 1995. EPA fully approved this plan as a revision to the Idaho SIP in a **Federal Register** Notice published on May 30, 1996 (61 FR 27019).

On July 18, 1997 (62 FR 38856), EPA revised the NAAQS standard for PM_{10}. Also, on July 18, 1997, we announced that the existing PM_{10} standards and associated designations and classifications would continue to apply for an interim period. In addition, we identified the criteria for determining that the pre-existing PM_{10} NAAQS would no longer be applicable for an area. On March 12, 1999 (64 FR 12257), we issued final rules approving Idaho's request that EPA revoke the pre-existing PM_{10} NAAQS, along with the associated nonattainment designation and classification for the Ada County/Boise, Idaho area because it had met the criteria. The Environmental Defense Fund (EDF) and others filed a Petition for Review in the U.S. Court of Appeals for the 9th Circuit opposing the revocation of the existing PM_{10} standard in Idaho. Before EPA responded to the petition, in a separate legal action, the U.S. Court of Appeals for the District of Columbia vacated the revised 1997 PM_{10} standard. *American Trucking Association, et al.*, v. *EPA, et al.*, and consolidated cases. Thus, because the pre-existing PM_{10} standards were revoked for the Ada County/Boise, Idaho area, and the revised 1997 PM_{10} standards were vacated, the Ada County/Boise, Idaho area was left without federally applicable PM_{10} standards. On June 26, 2000, EPA proposed to rescind the finding that the pre-existing PM_{10} standards and the accompanying designation and classification were no longer applicable in the Ada County/Boise, Idaho area. 65 FR 39321.[2] Soon after, the EDF, Community Planning Association of Southwest Idaho, Idaho Department of Environmental Quality (Idaho DEQ) and EPA reached a settlement agreement that called for the submission of a maintenance demonstration and plan containing motor vehicle emissions budgets for the Ada County/Boise, Idaho area and other measures necessary to meet the requirements of CAA section 175A as part of a petition for redesignation of the area to attainment under section 107(d)(3)(E) of the Clean Air Act. *See* 66 FR 8229 (January 30, 1999). On September 27, 2002, Idaho

[2] EPA extended the comment period for this rulemaking on July 26, 2000 (65 FR 45953) and later reopened the comment period on September 11, 2000 (65 FR 54828). EPA took final action on only the portion of the proposal related to the deletion of 40 CFR 50.6(d) on December 22, 2000. 65 FR 80779.

DEQ submitted to EPA a maintenance plan and a request for redesignation of the area to attainment.[3] Idaho provided supplemental information on July 10, 2003 and July 21, 2003.

5. What Are the Air Quality Characteristics of the Area?

The Ada County/Boise, Idaho area is located in the southwestern part of Idaho and encompasses the northern half of Ada County. For a legal description of the boundaries, see 40 CFR 81.313. The area includes the City of Boise and some, but not all, of the surrounding suburbs. The Boise Metropolitan Statistical Area, which includes Ada County and Canyon County, is currently one of the fastest growing metropolitan regions in the nation with a 2001 population of over 452,000. Four additional counties make up the remainder of a larger region known as the Treasure Valley.

Located in the Boise River Valley, the Ada County/Boise, Idaho area is prone to periods of air stagnation conditions due to atmospheric inversions, especially during the winter. Stagnation periods, combined with primary and secondary emissions of PM_{10}, have lead to exceedances of the PM_{10} NAAQS. As a result, the maintenance plan submitted by the State focuses particularly on periods of air stagnation when high levels of PM_{10} in the area are most likely.

Since 1991, only one exceedance of the 24-hour standard in the Ada County/Boise, Idaho area has been recorded. There have been six other exceedances, all measured in winter months and recorded in 1991 or earlier. There have been no exceedances of the annual PM_{10} standard since the PM_{10} standard was promulgated in 1987.

6. What Criteria Did EPA Use To Review the Redesignation Request and Maintenance Plan?

The criteria used to review the maintenance plan and redesignation request are derived from the Act, the General Preamble, and a policy and guidance memorandum from John Calcagni, September 4, 1992, P*rocedures for Processing Requests to Redesignate Areas to Attainment.* Section 107(d)(3)(E) of the Act states that the EPA can be redesignate an area to attainment if the following conditions are met:

1. The Administrator has determined the area has attained the NAAQS.

2. The Administrator has fully approved the applicable implementation plan under Section 110(k).

3. The Administrator has determined that the improvement in air quality is due to permanent and enforceable reductions in emissions.

4. The State has met all applicable requirements for the area under Section 110 and Part D.

5. The Administrator has fully approved a maintenance plan, including a contingency plan, for the area under Section 175A.

7. How Does the State Show That the Area Has Attained the PM_{10} NAAQS?

Demonstrating that an area has attained the PM_{10} NAAQS involves submission of ambient air quality data from an ambient air monitoring network representing peak PM_{10} concentrations. The data should be stored in the EPA Air Quality System. The 24-hour PM_{10} NAAQS is 150 ug/m^3. An area has attained the 24-hour standard when the average number of expected exceedances per year is less than or equal to one, when averaged over a three year period. (40 CFR 50.6) To make this determination, three consecutive years of complete ambient air quality data must be collected in accordance with federal requirements (40 CFR part 58, including appendices).

An attainment determination was made for 1999–2001 (to include the 1999 baseline inventory year) as well as 2000–2002 (to reflect most recent data). The data in EPA's Air Quality System show no exceedances of the 24-hour PM_{10} standard in the Ada County/Boise, Idaho Area during any of those four years (1999, 2000, 2001, or 2002). Therefore, the average annual number of expected exceedances of the 24 hour standard for both periods, 1999–2001 and 2000–2002 is zero. Thus, the Ada County/Boise, Idaho Area is in attainment with the 24-hour PM_{10} NAAQS.

The annual PM_{10} NAAQS is 50 ug/m^3. To determine attainment, the standard is compared to the expected annual mean, which is the average of the weighted annual mean for three consecutive years. The weighted annual mean for each year, 1999 through 2002, is below 50 ug/m^3 at all monitoring sites (it ranged from 18 ug/m^3 to 34 ug/m^3). Consequently the three year weighted annual mean is below 50 ug/m^3. Thus the Ada County/Boise, Idaho Area is in attainment with the annual PM_{10} NAAQS.

8. Does the Area Have a Fully Approved Nonattainment SIP?

States containing initial moderate PM_{10} nonattainment areas were required to submit a SIP by November 15, 1991, which implemented reasonably available control measures (RACM) by December 10, 1993, and demonstrated attainment of the PM_{10} NAAQS by December 31, 1994. The SIP for the area must be fully approved under Section 110(k) of the Act, and must satisfy all requirements that apply to the area. On May 30, 1996, (61 FR 27019), EPA fully approved the Ada County/Boise, Idaho PM_{10} nonattainment area SIP originally submitted by the State on November 14, 1991, and supplemented on December 30, 1994 and July 13, 1995. The Part D NSR rules for PM_{10} nonattainment areas were approved on July 23, 1993 (58 FR 39445) and amended on January 16, 2003 (68 FR 2217). The Ada County/Boise, Idaho PM_{10} nonattainment SIP demonstrated attainment of the PM_{10} NAAQS by December 31, 1994. Thus, the area has a fully approved nonattainment SIP.

9. Are the Improvements in Air Quality Which Warrant This Redesignation Permanent and Enforceable?

The State must be able to reasonably attribute the improvement in air quality to permanent and enforceable emission reductions. In making this showing, the State must demonstrate that air quality improvements are the result of actual enforceable emission reductions. This showing should consider emission rates, production capacities, and other related information. The analysis should assume that sources are operating at permitted levels (or historic peak levels) unless evidence is presented that such an assumption is unrealistic.

Idaho has demonstrated that the air quality improvements in the Ada County/Boise, Idaho area are the result of permanent enforceable emission reductions and not a result of either economic trends or meteorology. EPA concludes that the modeling demonstration shows that the area will meet the NAAQS, even under worst case meteorological conditions. The modeling demonstration assumes emission rates corresponding to the control measures relied on by the 1991 PM_{10} SIP for the area (which are still being implemented and relied on by the maintenance plan) as well as the terms and conditions limiting primary and secondary particulate matter emissions in newly-issued Tier II operating permits for twelve industrial sources. EPA approved the control measures relied on for the 1991 PM_{10} SIP as

[3] Title I, section 107(d)(3)(D) of the Act and the general preamble to Title I, 57 FR 13498 (April 16, 1992), allow the Governor of a State to request the redesignation of an area from nonattainment to attainment.

meeting the enforceability requirements on September 22, 1994 and May 30, 1996. 59 FR 48582 and 61 FR 27019. The Tier II Operating Permits are issued under federally-approved IDAPA 58.01.01 and are enforceable because they contain provisions that would result in penalties for not meeting the terms and conditions limiting particulate matter. Accordingly, Idaho can reasonably attribute improvement in air quality to emission reductions from these permanent and enforceable measures. Finally, with respect to economic trends, with the Ada County/Boise, Idaho area currently one of the fastest growing metropolitan regions in the nation, it is unlikely that air quality improvements are due to this factor. Even though the economic trend is positive, air quality improvements can still be expected because of the control measures that are in place in combination with motor vehicle technology improvements. In short, EPA believes that Idaho DEQ has demonstrated air quality improvements are the result of permanent enforceable emission reductions and not a result of economic trends or meteorological conditions and has met the enforceability requirements of Section 175.

10. Has the State Met All the Planning Requirements Applicable to This Area?

The September 1992 Calcagni memorandum directs states to meet all of the applicable Section 110 and Part D planning requirements for redesignation purposes. Thus, EPA interprets the Act to require state adoption and EPA approval of the applicable programs under Section 110 and Part D that were due prior to the submission of a redesignation request, before EPA may approve a redesignation request. How the State has met these requirements is discussed below.

11. How Does the State Meet Section 110 Requirements?

Section 110(a)(2) of the Act contains general requirements for nonattainment plans. These requirements include, but are not limited to, submission of a SIP that has been adopted by the State after reasonable notice and public hearing; provisions for establishment and operation of appropriate apparatus, methods, systems and procedures necessary to monitor ambient air quality; implementation of a permit program; provisions for Part C—Prevention of Significant Deterioration (PSD) and Part D—New Source Review (NSR) permit programs; criteria for stationary source emission control measures, monitoring and reporting, provisions for modeling; and provisions for public and local agency participation. See the General Preamble for further explanation of these requirements. 57 FR 13498 (April 16, 1992).

For purposes of redesignation, review of the Idaho SIP shows that the State has satisfied all requirements under the Act. Further, in 40 CFR 52.673, EPA has approved Idaho's SIP for the attainment and maintenance of the national standards under Section 110.

12. How Does the State Meet Part D Requirements?

Part D consists of general requirements applicable to all areas which are designated nonattainment based on a violation of the NAAQS. The general requirements are followed by a series of subparts specific to each pollutant. All PM_{10} nonattainment areas must meet the applicable general provisions of Subpart 1 and the specific PM_{10} provisions in Subpart 4, ''Additional Provisions for Particulate Matter Nonattainment Areas.'' The following paragraphs discuss these requirements as they apply to the Ada County/Boise, Idaho area.

13. How Does the State Meet the Section 172(c) Plan Provisions Requirements?

Subpart 1, section 172(c) contains general requirements for nonattainment plans. A thorough discussion of these requirements may be found in the General Preamble. 57 FR 13538 (April 16, 1992). The requirements for reasonable further progress, identification of certain emissions increases, and other measures needed for attainment were satisfied with the initial attainment plan for the Ada County/Boise, Idaho area. The requirement for an emission inventory is satisfied by the completion of the inventory required for the maintenance plan. The requirements of the Part D New Source Review (NSR) program will be replaced by the Part C Prevention of Significant Deterioration (PSD) program for PM_{10} upon the effective date of this redesignation action. The federally-approved PSD regulations for Idaho can be found at IDAPA 16.01.012,07, as incorporated by reference by EPA on July 28, 1982 (47 FR 32531), and most recently amended on January 16, 2003 (68 FR 2217).

14. How Does the State Meet Subpart 4 Requirements?

Part D, Subpart 4, Section 189(a), (c) and (e) requirements apply to any moderate nonattainment area before the area can be redesignated to attainment. The requirements which were applicable prior to the submission of the request to redesignate the area must be fully approved into the SIP before redesignating the area to attainment. These requirements are discussed below:

(a) Provisions to assure that RACM was implemented by December 10, 1993;

(b) Either a demonstration that the plan provided for attainment as expeditiously as practicable but not later than December 31, 1994, or a demonstration that attainment by that date was impracticable;

(c) Quantitative milestones which were achieved every 3 years and which demonstrate reasonable further progress (RFP) toward attainment by December 31, 1994; and

(d) Provisions to assure that the control requirements applicable to major stationary sources of PM_{10} also apply to major stationary sources of PM_{10} precursors, except where the Administrator determined that such sources do not contribute significantly to PM_{10} levels which exceed the NAAQS in the area.

As previously stated, EPA approved the 1991 PM_{10} SIP for the Ada County/Boise, Idaho area containing the elements meeting requirements (a) through (d) above on May 30, 1996 (61 FR 27019). Other requirements were due at a later date.

States with PM_{10} nonattainment areas were required to submit a permit program for the construction and operation of new and modified major stationary sources of PM_{10} by June 30, 1992. States also were to submit contingency measures by November 15, 1993, which become effective without further action by the State or EPA, upon a determination by EPA that the area has failed to achieve RFP or to attain the PM_{10} NAAQS by the applicable statutory deadline. See Sections 172(c)(9) and 189(a) and 57 FR 13543–13544.

Idaho has presented an adequate demonstration that it has met the requirements applicable to the area under Section 110 and Part D. The Part D NSR rules for PM_{10} nonattainment areas in Idaho were approved by EPA on July 23, 1993 (58 FR 39445) and amended provisions were approved by EPA on January 16, 2003 (68 FR 2217). The Clean Air Act requires that contingency measures take effect if the area fails to meet reasonable further progress requirements or fails to attain the NAAQS by the applicable attainment date. The Ada County/Boise, Idaho area attained the NAAQS for PM_{10} by the applicable attainment date of December 31, 1994 (*i.e.*, the average

annual number of expected exceedances of the 24-hour standard for the three year period 1992–1994 was less than one and the average weighted annual mean for the same period was below 50 ug/m3). Therefore, contingency measures no longer are required under Section 172(c)(9) of the Act. Contingency measures are also required for maintenance plans under Section 175A(d). Idaho has provided contingency measures in the maintenance plan for the Ada County/Boise, Idaho area to meet this requirement. The contingency measures in the maintenance plan are discussed below.

15. Has the State Submitted a Fully Approvable Maintenance Plan for the Area?

Section 107(d)(3)(E) of the Act stipulates that for an area to be redesignated to attainment, EPA must fully approve a maintenance plan which meets the requirements of Section 175A. Section 175A defines the general framework of a maintenance plan, which must provide for maintenance, *i.e.*, continued attainment, of the relevant NAAQS in the area for at least ten years after redesignation. The following is a list of core provisions required in an approvable maintenance plan.

1. The State must develop an attainment emissions inventory to identify the level of emissions in the area which is sufficient to attain the NAAQS.
2. The State must demonstrate maintenance of the NAAQS.
3. The State must verify continued attainment through operation of an appropriate air quality monitoring network.
4. The maintenance plan must include contingency provisions to promptly correct any violation of the NAAQS that occurs after redesignation of the area.

As explained below, Idaho has complied with each of these requirements in the PM_{10} maintenance plan for the Ada County/Boise, Idaho area.

16. How Has the State Met the Attainment Year Emission Inventory Requirement?

The State should develop an attainment year emissions inventory to identify the level of emissions in the area which is sufficient to attain the NAAQS. Where the State has made an adequate demonstration that air quality has improved as a result of the central measures in the SIP, the attainment inventory will generally be an inventory of actual emissions at the time the area attained the standards. This inventory should be consistent with EPA's most recent guidance on emission inventories for nonattainment areas available at the time and should include the emissions during the time period associated with the monitoring data showing attainment.

Idaho used monitoring data from 1999, 2000, and 2001 to show attainment of the NAAQS. The maintenance plan includes an attainment year emissions inventory for 1999. The State chose 1999 for the attainment year inventory because, among other things, it was the most recent year in which an air stagnation episode occurred and for which inventory data was available for collection. Based on the methodologies used to develop the inventory and EPA's review of assumptions and calculations, the inventory meets the inventory requirement in section 175a of the Act.

17. How Does the State Demonstrate Maintenance of the PM_{10} Standards in the Future?

A State may generally demonstrate maintenance of the NAAQS either by showing that future emissions of a pollutant or its precursors will not exceed the level of the attainment inventory, or by modeling to show that the future anticipated mix of sources and emission rates will not cause a violation of the NAAQS. Under the Act, PM_{10} areas were required to submit modeled attainment demonstrations to show that proposed reductions in emissions will be sufficient to attain the applicable NAAQS. For these areas, the maintenance demonstration should be based upon the same level of modeling.

Because of the contribution of precursors to the formation of PM_{10} in the Ada County/Boise, Idaho area, a dispersion model that could account for PM_{10} formation chemistry was necessary to demonstrate whether maintenance of the 24-hour standard would be achieved in the future. After evaluation of three different dispersion models, the State selected, and EPA agreed to, the selection of CAMx as an appropriate model to use for this projection. It was later shown to meet verification testing criteria.

To demonstrate attainment, Idaho used the model with meteorological conditions corresponding to a period of air stagnation experienced in 1991 in the Ada County/Boise, Idaho area. We believe that Idaho appropriately selected this event because it corresponded with one of the area's highest PM_{10} episodes. The meteorological conditions for this period, in combination with emissions projected for future years 2010, 2015, and 2020 (reflecting control measures approved under the 1991 PM_{10} SIP and newly issued Tier II operating permits for twelve industrial sources), resulted in modeling results showing no exceedances of the 24-hour PM_{10} standard of 150 ug/m^3. Thus, these results demonstrate maintenance of the 24-hour NAAQS for PM_{10} in the Ada County/Boise, Idaho area for at least ten years after redesignation to attainment.

For the PM_{10} annual standard, Idaho used a speciated linear rollback technique for the demonstration. This analysis indicates that the annual PM_{10} standard also is not expected to exceed the annual PM_{10} standard for at least ten years after redesignation to attainment.

After review and analysis of the attainment demonstration, EPA has concluded that the plan is adequate to maintain the PM_{10} standards for at least ten years from designation of the Ada County/Boise, Idaho area to attainment. See the Technical Support Document accompanying this notice for further detail.

18. How Will the State Monitor Air Quality To Verify Continued Attainment?

Once an area has been redesignated, the State must continue to operate an appropriate air quality monitoring network, in accordance with 40 CFR Part 58, to verify the attainment status of the area. The maintenance plan should contain provisions for continued operation of air quality monitors that will provide such verification. In its submission, Idaho DEQ commits to continue to operate and maintain the network of PM_{10} monitoring stations necessary to verify ongoing compliance with the PM_{10} NAAQS in the Ada County/Boise, Idaho area.

19. What Contingency Measures Will the State Rely Upon to Correct Any Future Violation of the NAAQS?

Section 175A of the Act also requires that a maintenance plan include contingency provisions, as necessary, to promptly correct any violation of the NAAQS that occurs after redesignation. These contingency measures are distinguished from those generally required for nonattainment areas under Section 172(c)(9), which are discussed above. At a minimum, the contingency measures must include a commitment that the State will implement all measures contained in the nonattainment SIP prior to redesignation.

The maintenance plan explains how the contingency plan requirements are being met. First, the plan explains that the contingency measures used for meeting contingency requirements in the 1991 PM_{10} SIP are being carried over to the maintenance plan. In the 1991 PM_{10} SIP, these measures (the mandatory residential wood burning ban control measures and a fugitive road dust reduction agreement) qualified as contingency measures because they provided for more than the total contingency measure reductions necessary to demonstrate attainment with the NAAQS. 61 FR 27022. In the maintenance plan, these measures continue to provide for more than the total reductions necessary to demonstrate attainment with the NAAQS since neither the mandatory burn ban nor the fugitive road dust reduction agreement were relied on fully to demonstrate maintenance of the NAAQS.

The maintenance plan also identifies a list of additional measures that are being developed or can be implemented in Ada and/or Canyon counties if there is a measured exceedance of the federal PM_{10} standards. These additional measures, which are listed below, are in various stages of implementation and development.[4]

1. Adopt local ordinances that require the covering of all loads of material that may have the potential to contribute to particulate matter pollution.
2. Adopt local ordinances that require no track-out onto paved roads from sites.
3. Adopt local ordinances that require no burning of household garbage.
4. Eliminate local permits that allow any kind of uncontrolled, outdoor burning not specifically allowed under Idaho State law.
5. Expand the existing Vehicle Inspection and Maintenance Program to include the testing of all registered vehicles in Ada County.
6. Expand mandatory burning restrictions to include clean burning woodstoves during air quality alerts.
7. Adopt local ordinances that prohibit the construction of any unpaved private roads, driveways or parking lots.

See the TSD accompanying this notice for additional information on the status of each of the above measures.

By carrying over all the control and contingency measures from the 1991 PM_{10} SIP, the State has not removed or reduced the stringency of the control measures relied on to demonstrate attainment in the 1991 PM_{10} SIP. Therefore, the State meets the requirement to implement all measures contained in the nonattainment SIP prior to redesignation. In light of the control measures and contingency measures carried over from the 1991 PM_{10} SIP, the development and implementation of the additional measures listed above, and the new control measures (*i.e.*, the Tier II operating permits) relied on for demonstrating maintenance of the NAAQS, we believe the State meets the requirements for contingency measures in the maintenance plan.

20. How Does This Action Affect Transportation Conformity?

Under Section 176(c) of the Act, transportation plans, programs, and projects in nonattainment or maintenance areas that are funded or approved under the Federal Transit Act, must conform to the applicable SIPs. In short, a transportation plan is deemed to conform to the applicable SIP if the emissions resulting from implementation of that transportation plan are less than or equal to the motor vehicle emission level established in the SIP for the maintenance year and other analysis years.

In this maintenance plan, procedures for estimating motor vehicle emissions are well documented. Accordingly, we propose to approve the following motor vehicle emissions budgets (MVEB) for PM_{10} and its precursors for use in conformity determinations for PM_{10} on future Transportation Improvement Programs and Regional Transportation Plans. These mobile source emissions represent a combination of vehicle exhaust, tire wear, and road dust.

ADA COUNTY/BOISE, IDAHO AREA MOTOR VEHICLE EMISSIONS BUDGET

Year	PM_{10} (tons/day)	NO_X (tons/day)	VOC (tons/day)
1999	153.0	21.0	10.4
2010	153.0	11.2	6.1
2015	153.0	7.8	5.0

The motor vehicle emissions budget applies as a ceiling on emissions in the year for which it is defined, and for all subsequent years until another year for which a different budget is defined or until a SIP revision modifies the budget. Thus, the 1999 MVEB will apply for any conformity horizon year through 2009, and the 2010 MVEB will apply for any conformity horizon year from 2010 through 2014, and the 2015 MVEB will apply for all subsequent years. The TSD summarizes how the PM_{10} motor vehicle emissions budget meets the criteria contained in the conformity rule (40 CFR 93.118(e)(4)).

II. How Can Comments Be Made on This Rulemaking?

A. How Can I Get Copies of This Document and Other Related Information?

1. *The Regional Office has established an official public rulemaking file available for inspection at the Regional Office.* EPA has established an official public rulemaking file for this action under ID–02–003. The official public file consists of the documents specifically referenced in this action, any public comments received, and other information related to this action. Although a part of the official docket, the public rulemaking file does not include Confidential Business Information (CBI) or other information whose disclosure is restricted by statute. The official public rulemaking file is available for public viewing at the Office of Air Quality (OAQ–107), EPA Region 10, 1200 Sixth Avenue, Seattle, WA 98101. A copy of the file, as it exists on the date of proposal, is available for public viewing at EPA's Idaho Operations Office at EPA Region 10, Idaho Operations Office, 1435 N. Orchard St., Boise, ID 83706. EPA requests contacting the contact listed in the ''For Further Information Contact'' section to schedule your inspection. EPA's official hours of business are Monday through Friday, 8:30 AM to 4:30 PM, excluding Federal Holidays.

2. Copies of the State submission and EPA's technical support document are also available for public inspection during normal business hours, by appointment at the State Air Agency. State of Idaho Department of Environmental Quality, 1445 North Orchard, Boise, ID 83706–2239.

3. Electronic Access. You may access this **Federal Register** document electronically through the *Regulation.gov* Web site located at *http://www.regulations.gov* where you can find, review, and submit comments on Federal rules that have been published in the **Federal Register**, the Government's legal newspaper, and are open for comment.

For public commenters, it is important to note that EPA's policy is that public comments, whether submitted electronically or on paper, will be made available for public viewing at the EPA Regional Office, as EPA receives them and without change, unless the comment contains

[4] For the purposes of section 175A, the State is not required to have fully adopted contingency measures that will take effect without further action by the State in order for the maintenance plan to be approved.

copyrighted material, CBI, or other information whose disclosure is restricted by statute. When EPA identifies a comment containing copyrighted material, EPA will provide a reference to that material in the version of the comment that is placed in the official public rulemaking file. The entire printed comment, including the copyrighted material, will be available at the Regional Office for public inspection.

B. How and to Whom Do I Submit Comments?

You may submit comments electronically, by mail, or through hand delivery/courier. To ensure proper receipt by EPA, identify the appropriate rulemaking identification number by including the text ''Public comment on proposed rulemaking ID–02–003'' in the subject line on the first page of your comment. Please ensure that your comments are submitted within the specified comment period. Comments received after the close of the comment period will be marked ''late.'' EPA is not required to consider these late comments.

1. Electronically. If you submit an electronic comment as prescribed below, EPA recommends that you include your name, mailing address, and an e-mail address or other contact information in the body of your comment. Also include this contact information on the outside of any disk or CD ROM you submit, and in any cover letter accompanying the disk or CD ROM. This ensures that you can be identified as the submitter of the comment and allows EPA to contact you in case EPA cannot read your comment due to technical difficulties or needs further information on the substance of your comment. EPA's policy is that EPA will not edit your comment, and any identifying or contact information provided in the body of a comment will be included as part of the comment that is placed in the official public docket. If EPA cannot read your comment due to technical difficulties and cannot contact you for clarification, EPA may not be able to consider your comment.

i. E-mail. You may send comments by electronic mail (e-mail) to *r10.aircom@epa.gov*, please including the text ''Public comment on proposed rulemaking ID–2002–003'' in the subject line. EPA's e-mail system is not an ''anonymous access'' system. If you send an e-mail comment directly without going through *Regulations.gov*, EPA's e-mail system automatically captures your e-mail address. E-mail addresses that are automatically captured by EPA's e-mail system are included as part of the comment that is placed in the official public docket.

ii. Regulation.gov. You may use Regulation.gov as an alternative method to submit electronic comments to EPA. Go directly to *Regulations.gov* at *http://www.regulations.gov*, then select Environmental Protection Agency at the top of the page and use the ''go'' button. The list of current EPA actions available for comment will be listed. Please follow the online instructions for submitting comments. The system is an ''anonymous access'' system, which means EPA will not know your identity, e-mail address, or other contact information unless you provide it in the body of your comment.

iii. Disk or CD ROM. You may submit comments on a disk or CD ROM that you mail to the mailing address identified in Section 2, directly below. These electronic submissions will be accepted in WordPerfect, Word or ASCII file format. Avoid the use of special characters and any form of encryption.

2. By Mail. Send your comments to: Donna Deneen, Office of Air Quality, (OAQ–107), EPA Region 10, 1200 Sixth Avenue, Seattle, Washington, 98101. Please include the text ''Public comment on proposed rulemaking ID–02–003'' in the subject line on the first page of your comment.

3. By Hand Delivery or Courier. Deliver your comments to: Donna Deneen, Office of Air Quality, (OAQ–107), EPA Region 10, 1200 Sixth Avenue, Seattle, Washington, 98101. Such deliveries are only accepted during the Regional Office's normal hours of operation. The Regional Office's official hours of business are Monday through Friday, 8:30 a.m. to 4:30 p.m. excluding Federal holidays.

C. How Should I Submit CBI to the EPA?

Do not submit information that you consider to be CBI electronically to EPA. You may claim information that you submit to EPA to be CBI by marking any part or all of that information as CBI (if you submit CBI on disk or CD ROM, mark the outside of the disk or CD ROM as CBI and then identify electronically within the disk or CD ROM the specific information that is CBI). EPA will not disclose information so marked except in accordance with procedures set forth in 40 CFR part 2.

In addition to one complete version of the comment that includes any information claimed as CBI, a copy of the comment that does not contain the information claimed as CBI must be submitted for inclusion in the official public regional rulemaking file. If you submit the copy that does not contain CBI on disk or CD ROM, mark the outside of the disk or CD ROM clearly that it does not contain CBI. Information not marked as CBI will be included in the public file and available for public inspection without prior notice. If you have any questions about CBI or the procedures for claiming CBI, please consult the person identified in the **FOR FURTHER INFORMATION CONTACT** section.

D. What Should I Consider as I Prepare My Comments for EPA?

You may find the following suggestions helpful for preparing your comments:

1. Explain your views as clearly as possible.
2. Describe any assumptions that you used.
3. Provide any technical information and/or data you used that support your views.
4. If you estimate potential burden or costs, explain how you arrived at your estimate.
5. Provide specific examples to illustrate your concerns.
6. Offer alternatives.
7. Make sure to submit your comments by the comment period deadline identified.
8. To ensure proper receipt by EPA, identify the appropriate regional file/rulemaking identification number in the subject line on the first page of your response. It would also be helpful if you provided the name, date, and **Federal Register** citation related to your comments.

III. Statutory and Executive Order Reviews

Under Executive Order 12866 (58 FR 51735, October 4, 1993), this proposed action is not a ''significant regulatory action'' and therefore is not subject to review by the Office of Management and Budget. For this reason, this action is also not subject to Executive Order 13211, ''Actions Concerning Regulations That Significantly Affect Energy Supply, Distribution, or Use'' (66 FR 28355, May 22, 2001). This proposed action merely proposes to approve state law as meeting Federal requirements and imposes no additional requirements beyond those imposed by state law. Accordingly, the Administrator certifies that this proposed rule will not have a significant economic impact on a substantial number of small entities under the Regulatory Flexibility Act (5 U.S.C. 601 *et seq.*). Because this rule proposes to approve pre-existing requirements under state law and does not impose any additional enforceable duty beyond that required by state law, it does not contain any unfunded mandate or significantly or uniquely

affect small governments, as described in the Unfunded Mandates Reform Act of 1995 (Pub. L. 104–4).

This proposed rule also does not have tribal implications because it will not have a substantial direct effect on one or more Indian tribes, on the relationship between the Federal Government and Indian tribes, or on the distribution of power and responsibilities between the Federal Government and Indian tribes, as specified by Executive Order 13175 (65 FR 67249, November 9, 2000). This action also does not have Federalism implications because it does not have substantial direct effects on the States, on the relationship between the national government and the States, or on the distribution of power and responsibilities among the various levels of government, as specified in Executive Order 13132 (64 FR 43255, August 10, 1999). This action merely proposes to approve a state rule implementing a Federal standard, and does not alter the relationship or the distribution of power and responsibilities established in the Clean Air Act. This proposed rule also is not subject to Executive Order 13045 ''Protection of Children from Environmental Health Risks and Safety Risks'' (62 FR 19885, April 23, 1997), because it is not economically significant.

In reviewing SIP submissions, EPA's role is to approve state choices, provided that they meet the criteria of the Clean Air Act. In this context, in the absence of a prior existing requirement for the State to use voluntary consensus standards (VCS), EPA has no authority to disapprove a SIP submission for failure to use VCS. It would thus be inconsistent with applicable law for EPA, when it reviews a SIP submission, to use VCS in place of a SIP submission that otherwise satisfies the provisions of the Clean Air Act. Thus, the requirements of section 12(d) of the National Technology Transfer and Advancement Act of 1995 (15 U.S.C. 272 note) do not apply. This proposed rule does not impose an information collection burden under the provisions of the Paperwork Reduction Act of 1995 (44 U.S.C. 3501 *et seq.*).

List of Subjects

40 CFR Part 52

Environmental protection, Air pollution control, Incorporation by reference, Intergovernmental relations, Particulate matter, Reporting and recordkeeping requirements.

40 CFR Part 81

Environmental protection, Air pollution control, National parks, Wilderness areas.

Dated: July 23, 2003.

Ronald A. Kreizenbeck,

Acting Regional Administrator, EPA, Region 10.

[FR Doc. 03–19355 Filed 7–29–03; 8:45 am]

BILLING CODE 6560–50–P

DEPARTMENT OF COMMERCE

National Oceanic and Atmospheric Administration

50 CFR Part 223

[Docket No. 030725185–3185–01; I.D.071403B]

RIN 0648–AR34

Endangered and Threatened Wildlife; Sea Turtle Conservation Requirements

AGENCY: National Marine Fisheries Service (NMFS), National Oceanic and Atmospheric Administration (NOAA), Commerce.

ACTION: Proposed rule; request for comments.

SUMMARY: The National Marine Fisheries Service (NMFS) proposes to amend the regulations that require most shrimp trawlers to use Turtle Excluder Devices (TEDs) in the southeastern Atlantic, including the Gulf of Mexico, to reduce the incidental capture of endangered and threatened sea turtles during shrimp trawling. Specifically, NMFS proposes to allow the use of a specific design of a hooped hard TED (''the Coulon TED'') that is capable of releasing large loggerhead and green turtles as well as leatherback turtles.

DATES: Written comments (see **ADDRESSES**) will be accepted through August 14, 2003.

ADDRESSES: Written comments on this action should be addressed to the Chief, Endangered Species Division, Office of Protected Resources, NMFS, by regular mail to 1315 East-West Highway, Silver Spring, MD 20910 or by fax to 301–713–0376. Comments will not be accepted if submitted via e-mail or the Internet.

FOR FURTHER INFORMATION CONTACT: Robert Hoffman (ph. 727–570–5312, fax 727–570–5517, e-mail Robert.Hoffman@noaa.gov), or Barbara A. Schroeder (ph. 301–713–1401, fax 301–713–0376, e-mail *Barbara.Schroeder@noaa.gov*).

SUPPLEMENTARY INFORMATION:

Background

All sea turtles that occur in U.S. waters are listed as either endangered or threatened under the Endangered Species Act of 1973 (ESA). The Kemp's ridley (*Lepidochelys kempii*), leatherback (*Dermochelys coriacea*), and hawksbill (*Eretmochelys imbricata*) are listed as endangered. The loggerhead (Caretta caretta) and green (*Chelonia mydas*) turtles are listed as threatened, except for breeding populations of green turtles in Florida and on the Pacific coast of Mexico, which are listed as endangered.

Sea turtles are incidentally taken and killed as a result of trawling activities in the Gulf of Mexico and along the Atlantic seaboard. Under the ESA and its implementing regulations, taking sea turtles is prohibited, with exceptions identified in 50 CFR 223.206. The incidental taking of turtles during shrimp or summer flounder trawling is exempted from the taking prohibition of section 9 of the ESA if the conservation measures specified in the sea turtle conservation regulations (50 CFR part 223) are followed. The regulations require most shrimp trawlers and summer flounder trawlers operating in the southeastern United States (Atlantic Area, Gulf Area, and summer flounder sea turtle protection area) to have a NMFS-approved Turtle Excluder Device (''TED'') installed in each net that is rigged for fishing to provide for the escape of sea turtles. TEDs currently approved by NMFS include single-grid hard TEDs and hooped hard TEDs conforming to a generic description, the flounder TED, and one type of soft TED the Parker soft TED. Hooped hard TEDs are currently approved for use only in the inshore waters of the Atlantic. Effective August 21, 2003, hooped hard TEDs will be approved for use in inshore waters of the Gulf Area as well.

TEDs incorporate an escape opening, usually covered by a webbing flap, that allows sea turtles to escape from trawl nets. To be approved by NMFS, a TED design must be shown to be 97 percent effective in excluding sea turtles during testing based upon specific testing protocols (55 FR 41092, October 9, 1990). Most approved hard TEDs are described in the regulations (50 CFR 223.207 (a)) according to generic criteria based upon certain parameters of TED design, configuration, and installation, including height and width dimensions of the TED opening through which the turtles escape.

February 21, 2003, Amendment to the Sea Turtle Conservation Regulations

On February 21, 2003, NMFS issued a final rule (68 FR 8456), amending the sea turtle conservation regulations to protect large loggerhead, green, and leatherback sea turtles. The final rule became effective April 15, 2003, with the exception of the Gulf Area where it will become effective on August 21, 2003. It requires that all shrimp trawlers fishing in the offshore waters of the southeastern United States (Atlantic Area and Gulf Area) and the inshore waters of Georgia and South Carolina use either a double cover flap TED, a single-grid hard TED with a 71–inch (180–cm) opening, or a Parker soft TED with a 96–inch (244–cm) opening in each net rigged for fishing. In inshore waters, except those of Georgia and South Carolina, the rule allows the use of a single-grid hard TED with a 44–inch (112–cm) opening, a Parker soft TED with a 56–inch (142–cm) opening, and a hooped hard TED with a 35–inch (89–cm) by 27–inch (69–cm) escape opening.

Since publication of the final rule (68 FR 8456, February 21, 2003), NMFS tested a new hooped hard TED design developed in Louisiana (this hooped hard TED is called the Coulon TED) that contains a larger escape opening than the hooped hard TED design used in inshore waters. Louisiana fishermen prefer the Coulon TED due to its higher shrimp retention, and its efficiency and quickness in releasing both turtles and fish bycatch. Because of the desire of fishermen to continue to use this style of TED and their assertion that it could indeed be made large enough to release leatherback turtles, the Southeast Fisheries Science Center's Harvesting Systems and Engineering Branch worked with the inventor of the Coulon TED and fishermen who use it to develop and test a large Coulon style TED to evaluate its ability to release large loggerhead, green, and leatherback turtles.

Large Hooped Hard TED Testing

NMFS tested the large Coulon style TED using testing protocols designed to evaluate a TED's ability to release large turtles. The protocols were developed during the testing and approval of the double cover TED (66 FR 24287, May 14, 2001). NMFS used the average carapace measurements of 15 nesting female leatherback turtles to construct a pipe-framed model of a leatherback turtle. This model measured 40 inches wide by 21 inches (102 cm by 53 cm) deep. The test was performed by a diver swimming repeatedly through the trawl with the model and pushing it through the TED opening. During these tests, the diver was able to push the model through the opening with ease. When the model was inverted (simulating the dorsal surface of the turtle oriented against the TED frame), the diver was still able to push the model through the opening with ease.

A large Coulon style TED with a hinged door covering the escape opening to within 12 inches (30 cm) from the back edge of the opening was also tested to determine its ability to release small turtles. The small turtle protocol calls for the release of 25 turtles, released one at a time, into a trawl towed at 2.5 knots. Each turtle is given 5 minutes to escape; if the turtle does not escape within 5 minutes, it is retrieved by divers and is considered to have been captured. The capture rate is then compared to that of a control TED (in this case a top opening double cover flap TED).

During the week of June 22, 2003, 25 small turtles were exposed to the large Coulon style TED with a hinged door and all 25 turtles escaped quickly and easily. The Southeast Fisheries Science Center's Harvesting Systems and Engineering Branch believes that this particular configuration of the large Coulon style TED would be the most difficult for small turtles to escape from because of the weight and size of the door. However, when compared to the control TED, the average escape times did not differ significantly; the average escape time for the control TED was 62 seconds compared to 68 seconds for the Coulon style TED with the hinged door.

Based upon the tests described above, NMFS determined that the large Coulon style TED meets the regulatory turtle release rate requirement.

Provisions of the Proposed Rule

NMFS proposes to allow a specific design of a hooped hard TED for offshore use, along with allowable modifications for hooped hard TEDs. The offshore hooped hard TED must meet certain minimum construction standards, in addition to the construction standards specified for hard TEDs generally. The frame for this TED must be made of aluminum rod a minimum of 5/8 inch (1.59 cm) in diameter or aluminum tubing a minimum of 1 inch (2.54 cm) in diameter with a minimum wall thickness of 1/8 inch (0.32 cm). The escape opening must have a horizontal measurement of no less than 40 inches (102 cm) wide and a forward measurement of no less than 35 inches (89 cm). The front hoop on an offshore hooped hard TED must have an inside horizontal measurement of at least 40 inches (102 cm) and an inside vertical measurement of at least 30 inches (76 cm). The minimum clearance between the deflector bars and the forward edge of the escape opening must be at least 23¼ inches (59 cm). The measurement between support bars must be no less than 40 inches (102 cm). The clearance between the deflector bars and the forward edge of the escape opening must be no less than 23¼ inches (59 cm)(see Figure 1 for illustrations of the offshore hooped hard TED and its dimensions).

BILLING CODE 3510–22–S

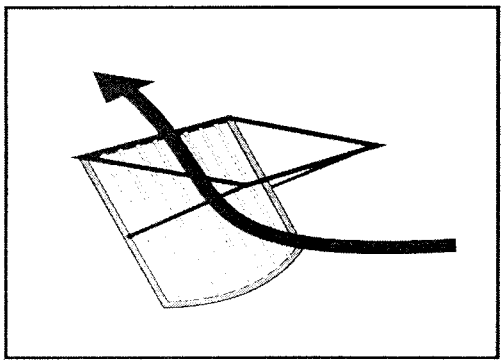

Fig. 1.A. Turtle escape path through offshore hooped hard TED.

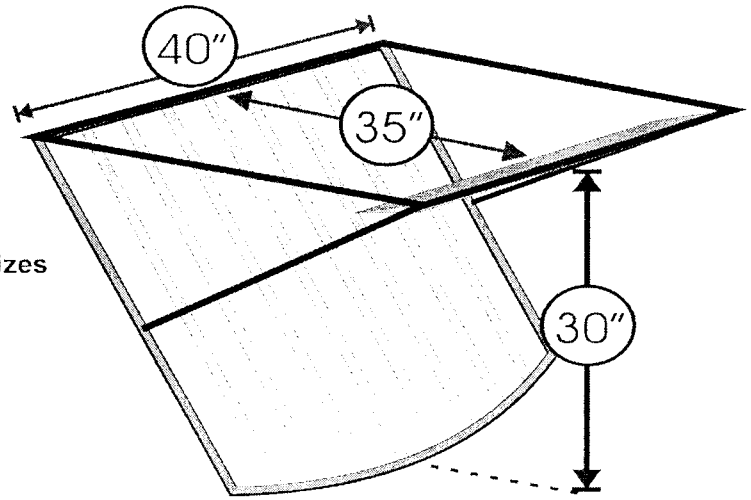

Fig. 1.B. Minimum opening sizes for offshore hooped hard TED.

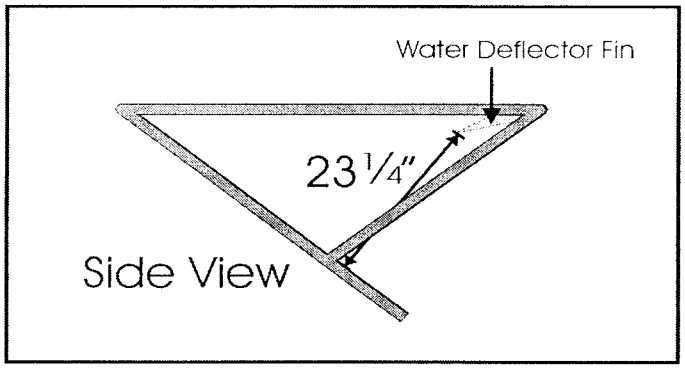

Fig. 1.C. Minimum grid clearance for offshore hooped hard TED, shown with optional water deflector fin.

Figure 1. Illustration of offshore hooped hard TED dimensions, showing optional water deflector fin.

BILLING CODE 3510–22–C

The proposed rule would allow three modifications for hooped hard TEDs. The first is the use of a water deflector fin used to increase shrimp retention. The original Coulon TED design incorporates such a water deflector fin. This fin can be welded onto the forward edge of the escape opening, projecting aft into the TED with an angle of 5 to 45–degrees from the normal, horizontal plane of the trawl. The fin must be constructed of a flat aluminum bar, up to 3/8 inch (0.95 cm) thick and up to 4 inches (10.2 cm) deep. The fin may be as wide as the width of the escape opening, minus 1 inch (2.5 cm).

The second allowable modification will be the use of a webbing flap. The resultant escape opening for the offshore hooped hard TED with a webbing flap must have a stretched mesh circumference of no less than 142 inches (361 cm). The end of the flap cannot extend more than 24 inches (61 cm) past the posterior edge of the frame. This is the same webbing flap allowed for use with single-grid hard TEDs with the 71–inch (180 cm) offshore opening.

The third allowable modification for hooped hard TEDs will be the use of a hinged door frame to partially cover the escape opening. The door must be at least as wide as the escape opening, may be up to 24 inches (61 cm) long, may be covered with taut mesh webbing (the size of the mesh cannot be greater than that used for the TED extension webbing), and must be connected to the forward edge of the escape opening by a hinge device that will allow the door to open upwards freely. The posterior edge of the door frame, in the closed position, must lie at least 12 inches (30 cm) forward of the posterior edge of the escape opening. A water deflector fin may be welded to the posterior edge of the door frame. This fin can be welded onto the forward edge of the escape opening, projecting aft into the TED with an angle of 5–45 degrees from the normal, horizontal plane of the trawl. The fin must be constructed of a flat aluminum bar, up to 3/8 inch (0.95 cm) thick and up to four inches (10.2 cm) deep. The fin may be as wide as the width of the escape opening, minus one inch (2.5 cm). The deflector fin must be no less than 12 inches (30 cm) forward of the posterior edge of the escape opening, when the door is in the closed position. Two stopper ropes or a hinge limiter may be used to limit the maximum opening height of the hinged door frame, as long as the minimum clearance between any part of the deflector bars and any part of the door, including a water deflector fin if installed, in its fully open position is at least 23¼ inches (59 cm) for an offshore hooped hard TED or at least 20 inches (51 cm) for an inshore hooped hard TED. The purpose of the stopper ropes or hinge limiters is to prevent the door frame from opening excessively during net deployment and haulback, possibly resulting in loss of catch or damage to the door. Any stopper ropes or hinge limiters must not restrict the free operation of the door, up to its maximum opening (i.e. the door must be able to easily swing to the required opening height before the stops or limiters affect its movement.) The hinged door cannot be used in combination with a webbing flap or with a water deflector fin attached to the forward edge of the escape opening (See Figure 2 for illustration of the optional hinged door frame, shown with water deflector fin).

BILLING CODE 3510–22–S

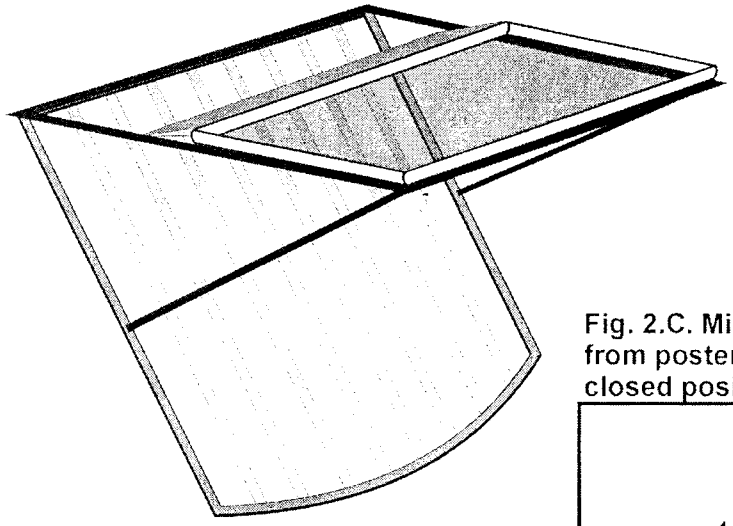

Fig. 2.A.
A perspective view of hooped hard TED with optional hinged door frame.

Fig. 2.C. Minimum clearance of door frame from posterior edge of escape opening in closed position.

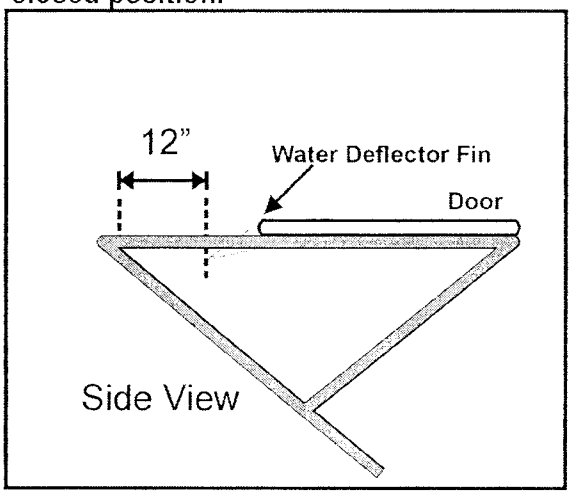

Fig. 2.B. Side perspective view

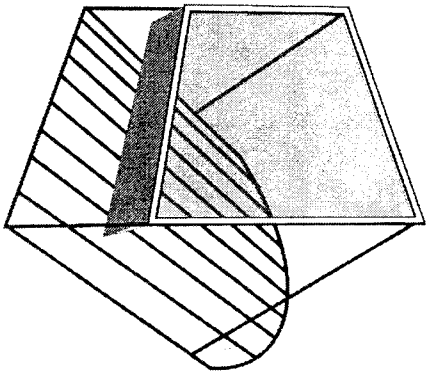

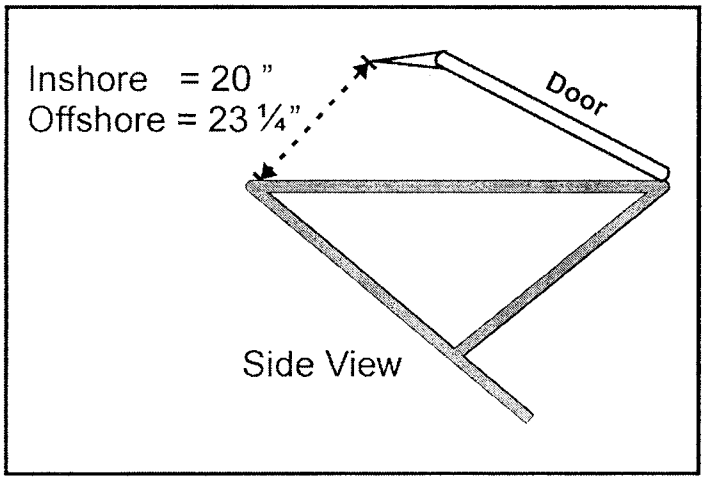

Fig. 2.D. Minimum clearance of door frame from deflector bars; door in fully open position.

Figure 2. Hooped hard TED with optional hinged door frame and water deflector fin.

BILLING CODE 3510–22–C

Classification

This proposed rule has been determined to be not significant for purposes of Executive Order 12866.

The National Marine Fisheries Service (NMFS) prepared an environmental assessment (EA) for this proposed rule that evaluates the potential impact on the environment that may result from the proposed rule. The EA found that the implementation of this proposed rule would not have a significant impact on the quality of the human environment and that the preparation of an environmental impact statement was not necessary. A copy of the EA is available from NMFS (see ADDRESSES).

The Endangered Species Act provides the statutory basis for this proposed rule.

The Chief Counsel for Regulation of the Department of Commerce certified to the Chief Counsel for Advocacy of the Small Business Administration that this proposed rule, if adopted, would not have a significant economic impact on a substantial number of small entities. This proposed rule, if adopted, will not have significant economic impact on a substantial number of small entities because the provisions of the proposed rule would allow fishermen the option of a hooped hard TED design to comply with the TED requirement. Hooped hard TEDs are already in use by some fishermen who prefer the Coulon TED due to its efficiency in releasing both turtles and fish bycatch, while retaining shrimp. As a result, a regulatory flexibility analysis was not prepared.

List of Subjects in 50 CFR Part 223

Endangered and threatened species, Exports, Imports, Marine mammals, Transportation.

Dated: July 25, 2003.

Rebecca Lent,

Deputy Assistant Administrator for Regulatory Programs, National Marine Fisheries Service.

For the reasons set out in the preamble, 50 CFR part 223 is proposed to be amended as follows:

PART 223—THREATENED MARINE AND ANADROMOUS SPECIES

1. The authority citation for part 223 continues to read as follows:

Authority: 16 U.S.C. 1531 *et seq.*

2. In § 223.207, paragraphs (a)(1), (a)(7)(i), and (a)(8)(i) are revised and paragraphs (d)(6) and (d)(7) are added to read as follows:

§ 223.207 Approved TEDs.

(a) *Hard TEDs*. Hard TEDs are TEDs with rigid deflector grids and are categorized as ''hooped hard TEDs'' and ''single-grid hard TEDs'' such as the Matagorda and Georgia TED (Figures 3 & 4 to this part). Hard TEDs complying with the following generic design criteria are approved TEDs:

(1) *Construction materials*—(i) *Single-grid and inshore hooped hard TED*. A single-grid hard TED or an inshore hooped hard TED must be constructed of one or a combination of the following materials, with minimum dimensions as follows:

(A) Solid steel rod with a minimum outside diameter of ½ inch (1.27 cm);

(B) Fiberglass or aluminum rod with a minimum outside diameter of ½ inch (1.27 cm); or

(C) Steel or aluminum tubing with a minimum outside diameter of ½ inch (1.27 cm) and a minimum wall thickness of 1/8 inch (0.32 cm) (also known as schedule 40 tubing).

(ii) *Offshore hooped hard TED*. An offshore hooped hard TED must be constructed of aluminum, with minimum dimensions as follows:

(A) Solid rod with a minimum outside diameter of 5/8 inch (1.59 cm); or

(B) Tubing with a minimum outside diameter of 1 inch (2.54 cm) and a minimum wall thickness of 1/8 inch (0.32 cm).

* * * * *

(7) * * *

(i) *Hooped hard TEDs*. * * *(A) *Escape opening for inshore hooped hard TED*. The inshore hooped hard TED escape opening must have a horizontal measurement of no less than 35 inches (89 cm) wide and a forward measurement of no less than 27 inches (69 cm). A hinged door frame may be used to partially cover the escape opening as provided in paragraph (d)(7) of this section. Alternatively, a webbing flap may be used as provided in paragraph (d)(3)(i) of this section. The resultant opening with a webbing flap must be a minimum width of 35 inches (89 cm) and a minimum height of 20 inches (51 cm), with each measurement taken simultaneously. This opening may only be used in inshore waters, except it may not be used in the inshore waters of Georgia and South Carolina.

(B) *Escape opening for offshore hooped hard TED*. The offshore hooped hard TED escape opening must have a horizontal measurement of no less than 40 inches (102 cm) wide and a forward measurement of no less than 35 inches (89 cm). A hinged door frame may be used to partially cover the escape opening as provided in paragraph (d)(7) of this section. Alternatively, a webbing flap may be used as provided in paragraph (d)(3)(ii) of this section. The resultant escape opening with a webbing flap must have a stretched mesh circumference of no less than 142 inches (361 cm).

* * * * *

(8) * * *

(i) *Hooped hard TEDs*—(A) *Inshore hooped hard TED*. The front hoop on an inshore hooped hard TED must have an inside horizontal measurement of at least 35 inches (89 cm) and an inside vertical measurement of at least 30 inches (76 cm). The minimum clearance between the deflector bars and the forward edge of the escape opening must be at least 20 inches (51 cm).

(B) *Offshore hooped hard TED*. The front hoop on an offshore hooped hard TED must have an inside horizontal measurement of at least 40 inches (102 cm) and an inside vertical measurement of at least 30 inches (76 cm). The minimum clearance between the deflector bars and the forward edge of the escape opening must be at least 23¼ inches (59 cm).

* * * * *

(d) * * *

(6) *Water deflector fin for hooped hard TEDs*. On a hooped hard TED, a water deflector fin may be welded to the forward edge of the escape opening. The fin must be constructed of a flat aluminum bar, up to 3/8 inch (0.95 cm) thick and up to 4 inches (10.2 cm) deep. The fin may be as wide as the width of the escape opening, minus 1 inch (2.5 cm). The fin must project aft into the TED with an angle between 5 and 45 from the normal, horizontal plane of the trawl. On an inshore hooped hard TED, the clearance between the deflector bars and the posterior edge of the deflector fin must be at least 20 inches (51 cm). On an offshore hooped hard TED, the clearance between the deflector bars and the posterior edge of the deflector fin must be at least 23¼ inches (59 cm).

(7) *Hinged door frame for hooped hard TEDs*. A hinged door frame may be attached to the forward edge of the escape opening on a hooped hard TED. The door frame must be constructed of materials specified at paragraphs (a)(1)(i) or (a)(1)(ii) of this section for inshore and offshore hooped hard TEDs, respectively. The door frame may be covered with a single panel of mesh webbing that is taut and securely attached with twine to the perimeter of the door frame, with a mesh size not greater than that used for the TED extension webbing. The door frame must be at least as wide as the TED escape opening. The door frame may be a maximum of 24 inches (61 cm) long. The door frame must be connected to the forward edge of the escape opening

by a hinge device that will allow the door to open outwards freely. The posterior edge of the door frame, in the closed position, must lie at least 12 inches (30 cm) forward of the posterior edge of the escape opening. A water deflector fin may be welded to the posterior edge of the hinged door frame. The fin must be constructed of a flat aluminum bar, up to 3/8 inch (0.95 cm) thick and up to four inches (10.2 cm) deep. The fin may be as wide as the width of the escape opening, minus one inch (2.5 cm). The fin must project aft into the TED with an angle between 5° and 45° from the normal, horizontal plane of the trawl, when the door is in the closed position. The clearance between the posterior edge of the escape opening and the posterior edge of the door frame or the posterior edge of the water deflector fin, if installed, must be no less than 12 inches (30 cm), when the door is in the closed position. Two stopper ropes or a hinge limiter may be used to limit the maximum opening height of the hinged door frame, as long as they do not obstruct the escape opening in any way or restrict the free movement of the door to its fully open position. When the door is in its fully open position, the minimum clearance between any part of the deflector bars and any part of the door, including a water deflector fin if installed, must be at least 20 inches (51 cm) for an inshore hooped hard TED and at least 23¼ inches (59 cm) for an offshore hooped hard TED. The hinged door frame may not be used in combination with a webbing flap specified at paragraph (d)(3) of this section or with a water deflection fin specified at paragraph (d)(6) of this section.

[FR Doc. 03–19375 Filed 7–29–03; 8:45 am]

BILLING CODE 3510–22–S

Notices

Federal Register

Vol. 68, No. 146

Wednesday, July 30, 2003

This section of the FEDERAL REGISTER contains documents other than rules or proposed rules that are applicable to the public. Notices of hearings and investigations, committee meetings, agency decisions and rulings, delegations of authority, filing of petitions and applications and agency statements of organization and functions are examples of documents appearing in this section.

DEPARTMENT OF AGRICULTURE

Forest Service

Tuolumne County Resource Advisory Committee

AGENCY: Forest Service, USDA.

ACTION: Notice of Meeting.

SUMMARY: The Tuolumne County Resource Advisory Committee will meet on August 11, 2003 at the City of Sonora Fire Department, in Sonora, California. The purpose of the meeting is to discuss the function of line officer concurrence in the project approval process; develop protocol for committee members to avoid conflicts of interest when voting on proposed projects; update on Forest Service's California RAC conference; update on Tuolumne County Staff Title II funding recommendations; and voting on proposed projects.

DATES: The meeting will be held August 11, 2003, from 12 p.m. to 3 p.m.

ADDRESSES: The meeting will be held at the City of Sonora Fire Department located at 201 South Shepherd Street, in Sonora, California (CA 95370).

FOR FURTHER INFORMATION CONTACT: Pat Kaunert, Committee Coordinator, USDA, Stanislaus National Forest, 19777 Greenley Road, Sonora, CA 95370 (202) 532–3671; e-mail *pkaunert@fs.fed.us.*

SUPPLEMENTARY INFORMATION: Agenda items to be covered include: (1) Discuss the function of line officer concurrence in the project approval process; (2) Develop protocol for committee members to avoid conflicts of interest when voting on proposed projects; (3) Provide update on Forest Service's California RAC conference; (4) Provide update on Tuolumne County Staff Title II funding recommendations; (5) Vote on proposed projects; (6) Public comment on meeting proceedings. This meeting is open to the public.

Dated: July 23, 2003.

Tom Quinn,

Forest Supervisor.

[FR Doc. 03–19311 Filed 7–29–03; 8:45 am]

BILLING CODE 3410–ED–M

DEPARTMENT OF AGRICULTURE

Forest Service

Tuolumne County Resource Advisory Committee

AGENCY: Forest Service, USDA.

ACTION: Notice of meeting.

SUMMARY: The Tuolumne County Resource Advisory Committee will meet on August 25, 2003, at the City of Sonora Fire Department, in Sonora, California. The purpose of the meeting is to complete voting on proposed projects.

DATES: The meeting will be held August 25, 2003, from 12 p.m. to 3 p.m.

ADDRESSES: The meeting will be held at the City of Sonora Fire Department located at 201 South Shepherd Street, in Sonora, California (CA 95370).

FOR FURTHER INFORMATION CONTACT: Pat Kaunert, Committee Coordinator, USDA, Stanislaus National Forest, 19777 Greenley Road, Sonora, CA 95370; (209) 532–3671; e-mail *pkaunert@fs.fed.us.*

SUPPLEMENTARY INFORMATION: Agenda items to be covered include: (1) Complete voting on proposed projects: (2) Public comment on meeting proceedings. This meeting is open to the public.

Dated: July 23, 2003.

Tom Quinn,

Forest Supervisor.

[FR Doc. 03–19312 Filed 7–29–03; 8:45 am]

BILLING CODE 3410–ED–M

DEPARTMENT OF AGRICULTURE

Rural Housing Service

Notice of Funds Availability (NOFA) Inviting Applications for the Rural Community Development Initiative (RCDI)

AGENCY: Rural Housing Service, USDA.

ACTION: Notice.

SUMMARY: This notice announces the availability of $6 million of grant funds for the RCDI program through the Rural Housing Service (RHS), herein referred to as the Agency, USDA. Applicants must provide matching funds in an amount at least equal to the Federal grant. These grants will be made to qualified intermediary organizations that will provide financial and technical assistance to recipients to develop their capacity and ability to undertake projects related to housing, community facilities, or community and economic development. This notice lists the information needed to submit an application for these funds.

DATES: The deadline for receipt of an application is 4 p.m. e.s.t. October 28, 2003. The application date and time are firm. The Agency will not consider any application received after the deadline.

ADDRESSES: Entities wishing to apply for assistance may download the application requirements delineated in this notice from the RCDI Web site: *www.rurdev.usda.gov/rhs/rcdi/index.htm.* Applicants may also request application packages from: William Kenney, Rural Housing Service, STOP 0787, 1400 Independence Ave. SW., Washington, DC 20250–0787, Telephone (202) 720–1506, e-mail: *william.kenney@usda.gov.*

FOR FURTHER INFORMATION CONTACT: William Kenney, Senior Loan Specialist, Community Programs, RHS, USDA, STOP 0787, 1400 Independence Ave. SW., Washington, DC 20250–0787, Telephone (202) 720–1506, Facsimile (202) 690–0471, e-mail: *william.kenney@usda.gov.* You may also obtain information from the RCDI Web site: *www.rurdev.usda.gov/rhs/rcdi/index.htm.*

SUPPLEMENTARY INFORMATION:

Programs Affected

This program is listed in the Catalog of Federal Domestic Assistance under Number 10.446. This program is not subject to the provisions of Executive Order 12372, which requires intergovernmental consultation with State and local officials.

Paperwork Reduction Act

The paperwork burden has been cleared by the Office of Management and Budget (OMB) under OMB Control Number 0575–0180.

Background

Congress created the RCDI in fiscal year (FY) 2000 to develop the capacity and ability of nonprofit organizations, low-income rural communities, or Federally recognized tribes to undertake projects related to housing, community facilities, or community and economic development in rural areas. Numerous changes have been made each year since. Congress appropriated $6 million in FY 2003 for the RCDI. Qualified private and public (including tribal) intermediary organizations proposing to carry out financial and technical assistance programs will be eligible to receive the funding. The intermediary will be required to provide matching funds in an amount at least equal to the RCDI grant.

Definitions for RCDI Purposes

Agency—the Rural Housing Service (RHS) or its successor.

Beneficiary—entities or individuals that receive benefits from assistance provided by the recipient.

Capacity—the ability of a recipient to finance and implement housing, community facilities, or community and economic development projects.

Federally recognized tribes—tribal entities recognized and eligible for funding and services from the Bureau of Indian Affairs, based on the notice in the **Federal Register** published by the Bureau of Indian Affairs on July 12, 2002, volume 67, number 134, page 46328. Tribally Designated Housing Entities are eligible RCDI recipients.

Financial assistance—Funds used by the intermediary to support the recipient's program, including funds that pass through the intermediary to the recipient for eligible RCDI purposes.

Funds—the RCDI grant and matching money.

Intermediary—a qualified private, nonprofit, or public (including tribal) organization that provides financial and technical assistance to multiple recipients. The applicant entity must have been organized for a minimum of 3 years.

Low-income community—an authority, district, economic development authority, regional council, or unit of government representing an incorporated city, town, village, county, township, parish, or borough. The location of the low-income community office that will be receiving the financial and technical assistance must be in a community with a median household income at, or below, 80 percent of either the State or national median household income.

Matching funds—cash or confirmed funding commitments. Matching funds must be at least equal to the grant amount. These funds can only be used for eligible RCDI activities. In-kind contributions cannot be used as matching funds.

Nonprofit organization—a private, community-based housing or community development entity with evidence of their nonprofit status. Examples of valid documentation of nonprofit status include, but are not limited to, a letter from the Internal Revenue Service (IRS) or a confirming certificate from the Secretary of State where the entity is located.

Recipient—the entity that receives the financial and technical assistance from the intermediary. The recipient must be a nonprofit organization, a low-income rural community, or a Federally recognized tribe.

Rural and rural area—a city, town, or unincorporated area that has a population of 50,000 inhabitants or less, other than urbanized areas immediately adjacent to a city, town, or unincorporated area that has a population in excess of 50,000 inhabitants.

Technical assistance—skilled help in improving the recipient's abilities in the areas of housing, community facilities, or community and economic development. The Agency will determine whether a specific activity qualifies as technical assistance.

1. The recipient and beneficiary, but not the intermediary, must be located in an eligible rural area. The applicable Rural Development State Office can assist in determining the eligibility of an area. A listing of Rural Development State Offices is included in this notice.

2. The name and location of recipients must be included in the grant application.

3. The recipients must be nonprofit organizations, low-income rural communities, or federally recognized tribes based on the RCDI definitions of these groups.

4. Documentation must be submitted to verify recipient eligibility. Acceptable documentation varies depending on the type of recipient: A letter from the IRS, confirming certificate from the Secretary of State, or other valid documentation of nonprofit status is required for nonprofit recipients; for low-income community recipients, the Agency requires (a) evidence the entity is a public body and (b) census data verifying that the median household income of the community where the office receiving the financial and technical assistance is located is at, or below, 80 percent of the State or national median household income; for Federally recognized tribes, the Agency needs the page listing their name from the current **Federal Register** list of tribal entities recognized and eligible for funding services (see the definition of Federally recognized tribes for details on this list).

5. Individuals cannot be recipients.

6. The intermediary must provide matching funds at least equal to the amount of the grant.

7. The intermediary must provide a program of financial and technical assistance to the recipient.

8. The intermediary organization must have at least 3 years prior experience working with nonprofit organizations, low-income rural communities, or tribal organizations in the areas of housing, community facilities, or community and economic development.

9. The respective minimum and maximum grant amount per intermediary is $50,000 and $500,000.

10. Proposals must be structured to utilize the grant funds within 3 years from the date of the award.

11. Each intermediary, whether singularly or jointly, may only submit one application for RCDI funds under this NOFA unless the intermediary's participation is limited to providing all or part of the matching funds.

12. Recipients can participate in more than one RCDI application; however, after grant selections are made, the recipient can only participate in multiple RCDI grants if the type of financial and technical assistance they will receive is not duplicative.

13. The intermediary and the recipient cannot be the same entity. The recipient can be a related entity to the intermediary, if it meets the definition of a recipient.

14. A nonprofit recipient must provide evidence that it is a valid nonprofit when the intermediary applies for the RCDI grant. Organizations with pending requests for nonprofit designations are not eligible.

15. If the recipient is a low-income community, identify the unit of government to which the financial and technical assistance will be provided, *e.g.*, town council or village board. The financial and technical assistance must be provided to the organized unit of government representing that community, not the community at large.

16. Nonprofits located in a rural area that is also a census designated place (CDP) are eligible. CDPs are not considered eligible rural areas under low-income communities because they do not have a unit of government to receive the financial and technical assistance.

Eligible Fund Uses

Fund uses must be consistent with the RCDI purpose (see ''Background'' section of this notice). A nonexclusive list of eligible grant uses includes the following:

1. Provide financial and technical assistance to develop recipients' capacity and ability to undertake projects related to housing, community facilities, or community and economic development, *i.e.*, the intermediary hires a staff person to provide technical assistance to the recipient or the recipient hires a staff person, under the supervision of the intermediary, to carry out the financial and technical assistance provided by the intermediary.

2. Develop the capacity of recipients to conduct community development programs, *e.g.*, homeownership education or training for minority business entrepreneurs.

3. Develop the capacity of recipients to conduct development initiatives, *e.g.*, programs that support micro-enterprise and sustainable development.

4. Increase leveraging ability and access to alternative funding sources by providing training and staffing.

5. Provide the financial and technical assistance component for essential community facilities projects.

6. Assist recipients in completing pre-development requirements for housing, community facilities, or community and economic development projects by providing resources for professional services, *e.g.*, architectural, engineering, or legal.

7. Improve recipient's organizational capacity by providing training and resource material on developing strategic plans, board operations, management, financial systems, and information technology.

8. Purchase computers, software, and printers at the recipient level.

9. Provide funds to recipients for training-related travel costs and training expenses related to RCDI.

Ineligible Fund Uses

1. Funding a revolving loan fund.

2. Construction (in any form).

3. Intermediary preparation of strategic plans for recipients.

4. Funding illegal activities.

5. Grants to individuals.

6. Funding a grant where there may be a conflict of interest, or an appearance of a conflict of interest, involving any action by the Agency.

7. Paying obligations incurred before the beginning date or after the ending date of the grant agreement.

8. Purchasing real estate.

9. Improvement or renovation of the grantee's office space or for the repair or maintenance of privately owned vehicles.

10. Any other purpose prohibited in 7 CFR parts 3015, 3016, and 3019, as applicable.

11. Funds cannot be used for recipient's general operating costs.

12. Using grant or matching funds for Individual Development Accounts.

Program Examples

The purpose of this initiative is to develop or increase the recipient's capacity through a program of financial and technical assistance to perform in the areas of housing, community facilities, or community and economic development. Strengthening the recipient's capacity in these areas will benefit the communities they serve. The RCDI structure requires the intermediary (grantee) to provide a program of financial and technical assistance to recipients. The recipients will, in turn, provide programs to their communities (beneficiaries). Following are examples of eligible and ineligible purposes under the RCDI program. These examples are illustrative and are not meant to limit the activities proposed in the application. Activities that meet the objective of the RCDI program will be considered eligible.

1. The intermediary must work directly with the recipient, not the beneficiaries. As an example: The intermediary provides training to the recipient on how to conduct homeownership education classes. The recipient then provides ongoing homeownership education to the residents of the community—the ultimate beneficiaries. This ''train the trainer'' concept fully meets the intent of this initiative. The intermediary is providing financial and technical assistance that will build the recipient's capacity by enabling them to conduct homeownership education classes for the public. This is an eligible purpose. However, if the intermediary directly provided homeownership education classes to individuals in the recipient's service area, this would not be an eligible purpose because the recipient would be bypassed.

2. If the intermediary is working with a low-income community as the recipient, the intermediary must provide the financial and technical assistance to the entity that represents the low-income community and is identified in the application. Examples of entities representing a low-income community are a village board or a town council. If the intermediary provides technical assistance to the board of directors of the low-income community on how to establish a cooperative, this would be an eligible purpose. However, if the intermediary works directly with individuals from the community to establish the cooperative, this is not an eligible purpose. The recipient's capacity is built by learning skills that will enable them to support sustainable economic development in their communities on an ongoing basis.

3. The intermediary may provide technical assistance to the recipient on how to create and operate a revolving loan fund (RLF). The intermediary may not monitor or operate the RLF. RCDI funds, including matching funds, cannot be used to fund RLFs.

Contents of Application Package

A complete application for RCDI funds must include the following.

1. A summary page, double spaced between items, listing the following: (This information should not be presented in narrative form.)

a. Applicant's name,

b. Applicant's address,

c. Applicant's telephone number,

d. Name of applicant's contact person and telephone number,

e. Applicant's fax number,

f. County where applicant is located,

g. Congressional district number where applicant is located,

h. Amount of grant request,

i. Applicant's Tax Identification Number,

j. Number of recipients, and

k. Source and amount of matching funds.

2. A detailed Table of Contents containing page numbers for each component of the application.

3. A project overview, no longer than five pages, including the following items, which will also be addressed separately and in detail under ''Building Capacity'' of the ''Evaluation Criteria.''

a. The type of financial and technical assistance to be provided and how it will be implemented.

b. How the capacity and ability of the recipients will be improved.

c. The overall goal to be accomplished.

d. The benchmarks to be used to measure the success of the program.

4. Organizational or other documents for the intermediary that confirm their existence for a minimum of 3 years as the applicant entity.

5. Verification of matching funds, *i.e.*, a copy of a bank statement if matching funds are in cash or a copy of the confirmed funding commitment from the funding source. The applicant will be contacted by the Agency prior to grant award to verify that the matching funds continue to be available. The applicant will have 10 working days

from the date of contact to submit verification of matching funds. If the applicant is unable to provide the verification within that timeframe, the application will be considered ineligible.

6. The following information for each recipient:

a. Recipient's entity name,

b. Complete address (mailing and physical location, if different),

c. County where located,

d. Number of congressional district where recipient is located,

e. Contact person's name and telephone number, and

f. Documentation on the population composition of the service area of the recipient.

7. Submit evidence the recipient entity is eligible.

a. Nonprofits—provide a valid letter from the IRS, confirming certificate from the Secretary of State, or other valid documentation of nonprofit status.

b. Low-income community—provide a copy of the 2000 census data to verify the population and evidence that the median household income is at, or below, 80 percent of either the State or national median household income. We will only accept data from *www.census.gov*. The specific instructions to retrieve data from this site are detailed under the ''Evaluation Criteria'' for ''Population'' and ''Income.''

c. Federally recognized tribes—provide the page listing their name from the current **Federal Register** list of tribal entities published on July 12, 2002, volume 67, number 134, page 46328.

8. Each of the ''Evaluation Criteria'' must be addressed specifically and individually by category. Present these criteria in narrative form. Documentation must be limited to three pages per criterion with the exception of attachments for ''Population'' and ''Income.''

9. A timeline identifying specific activities and proposed dates for completion.

10. A detailed project budget that includes the RCDI grant amount and matching funds for the duration of the grant. This should be a line-item budget, by category. Categories such as salaries, administrative, other, and indirect costs must be clearly defined. Supporting documentation listing the components of these categories must be included.

11. Form SF–424, ''Application for Federal Assistance.'' (Do not complete Form SF–424A, ''Budget Information.'' A separate line-item budget should be presented as described in No. 10 of this section.) The budget should be dated: Year 1, year 2, year 3. The indirect cost will be addressed in accordance with OMB Circulars A–87, A–122, and A–133.

12. Form SF–424B, ''Assurances—Non-Construction Programs.''

13. Form AD–1047, ''Certification Regarding Debarment, Suspension, and Other Responsibility Matters—Primary Covered Transactions.''

14. Form AD–1048, ''Certification Regarding Debarment, Suspension, Ineligibility and Voluntary Exclusion—Lower Tier Covered Transactions.''

15. Form AD–1049, ''Certification Regarding Drug-Free Workplace Requirements.''

16. Certification of Non-Lobbying Activities.

17. Standard Form LLL, ''Disclosure of Lobbying Activities,'' if applicable.

18. Form RD 400–1, ''Equal Opportunity Agreement,'' for the applicant and each recipient.

19. Form RD 400–4, ''Assurance Agreement,'' for the applicant and each recipient.

20. Identify and report any association or relationship with Rural Development employees.

The required forms and certifications can be downloaded from the RCDI Web site at: *www.rurdev.usda.gov/rhs/rcdi/index.htm*.

What and Where to Submit

The original application package must be submitted to: William Kenney, Rural Housing Service, STOP 0787, 1400 Independence Ave. SW., Washington, DC 20250–0787, and a copy of the application must be submitted to the Rural Development State Office where the applicant is located. A listing of Rural Development State Offices is included in this notice. Applications sent electronically or by facsimile will not be accepted.

When to Submit

The deadline for receipt of an application is 4 p.m. e.s.t. on October 28, 2003. The application deadline date and hour are firm and apply to submission of the original application to the National Office in Washington, DC. The Agency will not consider any application received after the deadline. A listing of Rural Development State Offices, their addresses, telephone numbers, and person to contact is provided elsewhere in this notice.

Application Selection Process

Rating and ranking. Applications will be rated and ranked by a review panel based on the ''Evaluation Criteria and Weights'' contained in this notice. If there is a tied score after the applications have been rated and ranked, the tie will be resolved by reviewing the scores for ''Building Capacity'' and the applicant with the highest score in that category will receive a higher ranking. If the scores for ''Building Capacity'' are the same, the scores will be compared for the next criterion, in sequential order, until one highest score can be determined.

Initial screening. The Agency will screen each application to determine eligibility during the period immediately following the application deadline. Listed below are many of the reasons for rejection from the previous funding rounds to help the applicant prepare a better application. The following reasons for rejection are not all inclusive; however, they represent the majority of the applications previously rejected.

1. Recipients were not located in eligible rural areas based on the definition in this notice.

2. Applicants failed to provide evidence of recipient's status, *i.e.*, documentation supporting nonprofit designation.

3. Application did not follow the RCDI structure with an intermediary and recipients.

4. Recipients were not identified in the application.

5. Recipients cannot be individuals.

6. Intermediary did not provide evidence it had been incorporated for at least 3 years as the applicant entity.

7. Applicants failed to address the ''Evaluation Criteria.''

8. The purpose of the proposal did not qualify as an eligible RCDI purpose.

9. Funds cannot be used for construction or renovations.

10. Financial and technical assistance cannot be provided directly to individuals.

Rural Development State Office Responsibilities During the Application Process

The State Office will review the application and provide the State Director's written comments and recommendations to the National Office. Comments must include the following:

1. Determine if each recipient listed in the application is located in an eligible rural area based on the RCDI definition of rural.

2. Consult with other program areas regarding their experience with the intermediary or recipients, if any.

3. Determine the compatibility of the application with the goals of the State's strategic plan.

4. Provide comments or recommendations pertaining to the application.

Comments must be submitted to William Kenney within 3 weeks from the RCDI application deadline.

Evaluation Criteria and Weights

Applications will be evaluated using the following criteria and weights:

1. Building Capacity—maximum 60 points

The applicant must demonstrate how they will improve the recipients' capacity, through a program of financial and technical assistance, as it relates to the RCDI purposes. Capacity-building technical assistance should provide new functions to the recipients or expand existing functions that will enable the recipients to undertake projects in the areas of housing, community facilities, or community and economic development that will benefit the community. The program of financial and technical assistance provided, how the program is delivered, and the measurability of the program's effectiveness will determine the merit of the application. All applications will be competitively ranked with the applications providing the most improvement in capacity development and measurable activities being ranked the highest. Capacity-building technical assistance may include, but is not limited to: training to conduct community development programs, *e.g.*, homeownership education, or the establishment of minority business entrepreneurs, cooperatives, or micro-enterprises; organizational development, *e.g.*, assistance to develop or improve board operations, management, and financial systems; instruction on how to develop and implement a strategic plan; instruction on how to access alternative funding sources to increase leveraging opportunities; staffing, *e.g.*, hiring a person at intermediary or recipient level to provide technical or financial assistance to recipients; and purchase technology equipment at the recipient level, *e.g.*, computers, printers, and software.

The narrative response must:

a. Describe the type of financial and technical assistance to be provided to the recipients and the activities that will be conducted to deliver the financial and technical assistance;

b. Explain how financial and technical assistance will develop or increase the recipient's capacity. Indicate whether a new function is being developed or if existing functions are being expanded or performed more effectively;

c. Identify which RCDI purpose areas will be addressed with this assistance: housing, community facilities, or community and economic development; and

d. Describe how the results of the financial and technical assistance will be measured. What benchmarks will be used to measure effectiveness?

Scoring—maximum of 60 points

1. Type of financial and technical assistance and implementation activities. 0–35 points

a. How well defined is the purpose of this proposal?

b. Are the implementation activities specifically defined?

c. Will the proposed implementation activities actually develop the recipient's capacity?

2.How financial and technical assistance will develop capacity. 0–10 points

a. Is a new function being developed and will it build capacity at the recipient level?

b. Is an existing function being expanded or performed more effectively and will it build capacity at the recipient level?

3. RCDI purpose. 0–5 points

a. Housing,

b. Community facilities, or

c. Community and economic development.

4. Measuring outcomes. 0–10 points

a. What benchmarks will be used to measure outcomes and effectiveness?

b. Are the proposed benchmarks an effective measurement for the type of financial and technical assistance provided?

2. Expertise—maximum 30 points

The applicant must demonstrate that it has conducted programs of financial and technical assistance and achieved measurable results in the areas of housing, community facilities, or community and economic development in rural areas. Provide the name, contact information, and amount of the financial and technical assistance the applicant organization has provided to the following for the last 5 years:

a. Nonprofit organizations in rural areas.

b. Low-income communities in rural areas, (also include the type of entity, *e.g.*, city government, town council, or village board).

c. Federally recognized tribes or any other culturally diverse organizations.

d. Organization synopsis. Scoring—maximum 30 points

1. The applicant has worked with groups in at least one of the three categories. 0–6 points

2. The types of financial and technical assistance provided are similar to the RCDI purposes. 0–15 points

3. The applicant demonstrates experience in working with the types of entities listed as recipients in the application. 0–9 points

3. Population—maximum 30 points

Population is based on the 2000 census data for the community in which the recipient is located. Community is defined for scoring purposes as a city, town, village, county, parish, borough, or census-designated place where the recipient's office is physically located. The applicant must submit a copy of the census data from the following website to verify the population figures used for each recipient. The data can be accessed on the Internet at *www.census.gov;* click on ''American FactFinder'' from the left menu; click on drop-down menu for ''Show Me''; select ''Population, Race and Hispanic or Latino under Geographic Comparison Tables (GCT)''; click on drop-down menu under ''for''; select ''State—and the type of State geographic subdivision''; select State from next drop-down menu; click on ''Go''; print information for submission and highlight recipient locations. The average population of the recipient locations will be used and will be scored as follows:

Population Scoring 5,000 or less 30 points 5,001 to 10,000 20 points 10,001 to 20,000 10 points 20,001 to 50,000 5 points

4. Income—maximum 30 points

The average of the median household income for the communities where the recipients are physically located will determine the points awarded. Applicants may compare the average recipient median household income to the State median household income or the national median household income, whichever yields the most points. The national median household income to be used is $41,994. The applicant must submit a copy of the income data from the following website to verify the income for each recipient. The data being used is from the 2000 census. The data can be accessed from the Internet at *www.census.gov*; click on ''American FactFinder'' from left menu; click on drop-down menu for ''Show Me''; select ''Economic Characteristics: Employment, Income, Poverty and More''; click on drop-down menu under ''for''; select ''a city or town''; select State from next drop-down menu; select the city or town from the next drop-down menu; click on ''Go''; print information for submission. Points will be awarded as follows:

Average Recipient Median Income Is: Scoring

Less than 60 percent of the State or national median household income 30 points

Between 60 and 70 percent of the State or national median household income 20 points

Greater than 70 percent of the State or national median household income 10 points

5. Innovative Approach—maximum 20 points

The applicant must demonstrate that it has developed an innovative approach that can be used by other organizations as a model. To be considered innovative, the approach must propose an easily replicated new or useful service or method of providing service to recipients that builds their capacity to improve their communities in the areas of housing, community facilities, or community and economic development. Points will be awarded to applications that have the highest score on the following factors:

a. Ease of replication by nonprofit organizations, low-income rural communities, or Federally recognized tribes;

b. Uniqueness of proposal;

c. Financial return to rural communities; and

d. Need by nonprofit organization, low-income rural community, or Federally recognized tribe.

If warranted, up to 20 applicants will be eligible to receive points in this category. The application ranking and scoring are:

Ranking Scoring 10 highest-ranking applications for this criterion 20 points

Next 10 highest-ranking applications for this criterion 10 points

If there is a tied score, it will be resolved by using the format listed under ''Rating and Ranking'' under ''Application Selection Process'' elsewhere in this notice.

6. Soundness of Approach—maximum 50 points

The applicant can receive up to 50 points for soundness of approach. The overall proposal will be considered under this criterion. Applicants must list the page numbers in the application that address these factors.

a. The ability to provide the proposed financial and technical assistance based on prior accomplishments has been demonstrated. 0–5 points b. The proposed financial and technical assistance program is clearly stated and the applicant has defined how this proposal will be implemented. The plan for implementation is viable. 0–20 points

c. Cost effectiveness will be evaluated based on the budget in the application. The proposed grant amount and matching funds should be utilized to maximize capacity building at the recipient level. 0–15 points

d. The proposal fits the objectives for which applications were invited. 0–10 points

7. Geographic Distribution Points—20 points

The applicant must provide a map that specifically describes the areas covered by the recipients. After applications have been evaluated and awarded points under the first 6 criteria, the Agency may award 20 points per application to promote a broad geographic distribution of RCDI funds.

8. Purpose Distribution Points—20 points

The applicant must state the primary purpose of the application, *i.e.*, housing, community facilities, or community and economic development.

After applications have been evaluated and awarded points under the first 6 criteria, the Agency may award 20 points per application to promote diversity of RCDI purposes.

9. Proportional Distribution Points—20 points

The applicant must state the amount of the grant request. After applications have been evaluated and awarded points under the first 6 criteria, the Agency may award 20 points per application to promote dispersion of grant awards between the range of $50,000 to $500,000.

Deliverables

Grant funds and matching funds must be used in equal proportions. This does not mean funds have to be used equally by line item. The request for reimbursement and supporting documentation must show that RCDI fund usage does not exceed the cumulative amount of matching funds used. Grant funds will be disbursed pursuant to relevant provisions of 7 CFR parts 3015, 3016, and 3019, as applicable. Matching funds must be used to support the overall purpose of the RCDI program. RCDI funds will be disbursed on a reimbursable basis only. No advances will be made. Matching funds cannot be expended prior to execution of the RCDI Grant Agreement. No reimbursement will be made for any funds expended prior to execution of the RCDI Grant Agreement unless the grantee has requested and received written Agency approval of the costs prior to the actual expenditure. This exception is applicable for up to 90 days prior to grant closing and only applies to grantees that have received written approval but have not executed the RCDI Grant Agreement. The Agency cannot retroactively approve reimbursement for expenditures prior to execution of the RCDI Grant Agreement.

Grant Amounts

In the event the applicant is awarded a grant that is less than the amount requested, the applicant will be required to modify its application to conform to the reduced amount before execution of the grant agreement. The Agency reserves the right to reduce or de-obligate the award if acceptable modifications are not submitted by the awardee within 15 working days from the date the request for modification is made. Any modifications must be within the scope of the original application.

Program Requirements

1. A Civil Rights Impact Analysis Certification must be completed by the Agency prior to grant approval.

2. A pre-award compliance review will be conducted by the Agency prior to closing the grant.

3. The intermediary and recipient must comply with Title VI of the Civil Rights Act of 1964, Title IX of the Education Amendments of 1972, Section 504 of the Rehabilitation Act of 1973, and Executive Order 12250.

4. The grantee must comply with policies, guidance, and requirements as described in the following applicable OMB Circulars and Code of Federal Regulations:

a. OMB Circular No. A–87 (Cost Principles Applicable to Grants, Contracts and Other Agreements with State and Local Governments);

b. OMB Circular No. A–122 (Cost Principles for Nonprofit Organizations);

c. OMB Circular No. A–133 (Audits of States, Local Governments, and Non-Profit Organizations);

d. 7 CFR part 3015 (Uniform Federal Assistance Regulations);

e. 7 CFR part 3016 (Uniform Administrative Requirements for Grants and Cooperative Agreements to State and Local Governments); and

f. 7 CFR part 3019 (Uniform Administrative Requirements for Grants and Agreements with Institutions of Higher Education, Hospitals, and Other Nonprofit Organizations).

Program Restrictions

Meeting expenses. In accordance with 31 U.S.C. 1345, ''Expenses of Meetings,'' appropriations may not be used for travel, transportation, and subsistence expenses for a meeting. RCDI grant funds cannot be used for these meeting-

related expenses. Matching funds may be used to pay for these expenses. RCDI funds may be used to pay for a speaker as part of a program, equipment to facilitate the program, and the actual room that will house the meeting. RCDI funds can be used for travel, transportation, or subsistence expenses for training and technical assistance purposes. Any meeting or training not delineated in the application must be approved by the Agency to verify compliance with 31 U.S.C. 1345. Travel and per diem expenses will be similar to those paid to Agency employees. Rates are based upon location. Rate information can be accessed on the Internet at *http://policyworks.gov/perdiem*. Grantees and recipients will be restricted to traveling coach class on common carrier airlines. Grantees and recipients may exceed the Government rate for lodging by a maximum of 20 percent. Meals and incidental expenses will be reimbursed at the same rate used by Agency employees. Mileage and gas reimbursement will be the same rate used by Agency employees. The current mileage and gas reimbursement rate is 36.5 cents per mile.

Grantee Requirements

Grantees will be required to do the following.

1. Execute a Rural Community Development Initiative Grant Agreement, which is published at the end of this NOFA.
2. Execute Form RD 1940–1, ''Request for Obligation of Funds.''
3. Use Form SF 270, ''Request for Advance or Reimbursement,'' to request reimbursements.
4. Provide financial status and project performance reports on a quarterly basis starting with the first full quarter after the grant award.
5. Maintain a financial management system that is acceptable to the Agency.
6. Ensure that records are maintained to document all activities and expenditures utilizing RCDI grant funds and matching funds. Receipts for expenditures will be included in this documentation.
7. Provide annual audits or management reports on Form RD 442–2, ''Statement of Budget, Income, and Equity,'' and Form RD 442–3'', ''Balance Sheet,'' depending on the amount of Federal funds expended and the outstanding balance.
8. Collect and maintain data provided by recipients on race, sex, and national origin and ensure recipients collect and maintain the same data on beneficiaries. Race and ethnicity data will be collected in accordance with OMB Federal Register notice, ''Revisions to the Standards for the Classification of Federal Data on Race and Ethnicity,'' Vol. 62, No. 210, October 30, 1997. Sex data will be collected in accordance with Title IX of the Education Amendments of 1972. These items should not be submitted with the application, but should be available upon request by the Agency.
9. Provide a final project performance report.
10. Identify and report any association or relationship with Rural Development employees on a format provided by the Agency.

Rural Development State Offices

Note: Telephone numbers listed are not toll-free.

Alabama State Office, Suite 601, Sterling Centre, 4121 Carmichael Road, Montgomery, AL 36106–3683, (334) 279–3400, TDD (334) 279–3495, James B. Harris.

Alaska State Office, 800 West Evergreen, Suite 201, Palmer, AK 99645, (907) 761–7705, TDD (907) 761–8905, Dean Stewart.

Arizona State Office, Phoenix Corporate Center, 3003 N. Central Ave., Suite 900, Phoenix, AZ 85012–2906, (602) 280–8747, TDD (602) 280–8705, Leonard Gradillas.

Arkansas State Office, 700 W. Capitol Ave., Rm. 3416, Little Rock, AR 72201–3225, (501) 301–3250, TDD (501) 301–3200, Jesse G. Sharp.

California State Office, 430 G Street, Agency 4169, Davis, CA 95616–4169, (530) 792–5810, TDD (530) 792–5848, Janice Waddell.

Colorado State Office, 655 Parfet Street, Room E100, Lakewood, CO 80215, 720–544–2903, TDD 720–544–2976, Leroy W. Cruz.

Connecticut, Served by Massachusetts State Office.

Delaware and Maryland State Office, 4607 South DuPont Highway, P.O. Box 400, Camden, DE 19934–0400, (302) 697–4300, TDD (302) 697–4303, James E. Waters.

Florida & Virgin Islands State Office, 4440 NW. 25th Place, P.O. Box 147010, Gainesville, FL 32614–7010, (352) 338–3440, TDD (352) 338–3499, Glenn E. Walden.

Georgia State Office, Stephens Federal Building, 355 E. Hancock Avenue, Athens, GA 30601–2768, (706) 546–2171, TDD (706) 546–2034, Jerry M. Thomas.

Guam, Served by Hawaii State Office.

Hawaii, Guam, & Western Pacific Territories State Office, Room 311, Federal Building, 154 Waianuenue Avenue, Hilo, HI 96720, (808) 933–8380, TDD (808) 933–8321, Thao Khamoui.

Idaho State Office, 9173 West Barnes Dr., Suite A1, Boise, ID 83709, (208) 378–5617, TDD (208) 378–5600, Daniel H. Fraser.

Illinois State Office, 2118 West Park Court, Suite A, Champaign, IL 61821, (217) 403–6200, TDD (217) 403–6240, Gerald A. Townsend.

Indiana State Office, 5975 Lakeside Boulevard, Indianapolis, IN 46278, (317) 290–3100 (ext. 431), TDD (317) 290–3343, Gregg Delp.

Iowa State Office, 873 Federal Building, 210 Walnut Street, Des Moines, IA 50309, (515) 284–4663, TDD (515) 284–4858, Dorman Otte.

Kansas State Office, 1303 SW. First American Place, Suite 100, Topeka, KS 66604–4040, (785) 271–2730, TDD (785) 271–2767, Gary L. Smith.

Kentucky State Office, 771 Corporate Drive, Suite 200, Lexington, KY 40503, (859) 224–7415, TDD (859) 224–7300, Vernon Brown.

Louisiana State Office, 3727 Government Street, Alexandria, LA 71302, (318) 473–7940, TDD (318) 473–7920, Danny H. Magee.

Maine State Office, 967 Illinois Ave., Suite 4, P.O. Box 405, Bangor, ME 04402–0405, (207) 990–9106, TDD (207) 942–7331, Alan C. Daigle.

Maryland, Served by Delaware State Office.

Massachusetts, Connecticut, & Rhode Island State Office, 451 West Street, Amherst, MA 01002, (413) 253–4300, TDD (413) 253–7068, Daniel R. Beaudette.

Michigan State Office, 3001 Coolidge Road, Suite 200, East Lansing, MI 48823, (517) 324–5192, TDD (517) 337–6795, Philip H. Wolak.

Minnesota State Office, 410 AgriBank Building, 375 Jackson Street, St. Paul, MN 55101–1853, (651) 602–7800, TDD (651) 602–3799, James Maras.

Mississippi State Office, Federal Building, Suite 831, 100 W. Capitol Street, Jackson, MS 39269, (601) 965–4316, TDD (601) 965–5850, Darnella Smith-Murray.

Missouri State Office, 601 Business Loop 70 West, Parkade Center, Suite 235, Columbia, MO 65203, (573) 876–0995, TDD (573) 876–9480, D. Clark Thomas.

Montana State Office, 900 Technology Blvd., Suite B, Bozeman, MT 59771, (406) 585–2530, TDD (406) 585–2562, Deborah Chorlton.

Nebraska State Office, Federal Building, Room 152, 100 Centennial Mall N., Lincoln, NE 68508, (402) 437–5559, TDD (402) 437–5551, Denise Brosius-Meeks.

Nevada State Office, 1390 South Curry Street, Carson City, NV 89703–9910, (775) 887–1222 (ext. 26), TDD (775) 885–0633, Mike Holm.

New Hampshire State Office, Concord Center, Suite 218, Box 317, 10 Ferry Street, Concord, NH 03301–5004, (603) 223–6037, TDD (603) 223–6083, William W. Konrad.

New Jersey State Office, 8000 Midlantic Drive, 5th Floor North, Suite 500, Mt. Laurel, NJ 08054, (856) 787–7750, Michael P. Kelsey.

New Mexico State Office, 6200 Jefferson St. NE., Room 255, Albuquerque, NM 87109, (505) 761–4950, TDD (505) 761–4938, Clyde F. Hudson.

New York State Office, The Galleries of Syracuse, 441 S. Salina Street, Suite 357, Syracuse, NY 13202–2541, (315) 477–6400, TDD (315) 477–6447, Gail Giannotta.

North Carolina State Office, 4405 Bland Road, Suite 260, Raleigh, NC 27609, (919) 873–2000, TDD (919) 873–2003, Phyllis Godbold.

North Dakota State Office, Federal Building, Room 208, 220 East Rosser, P.O. Box 1737, Bismarck, ND 58502–1737, (701) 530–2037, TDD (701) 530–2113, Donald Warren.

Ohio State Office, Federal Building, Room 507, 200 North High Street, Columbus, OH 43215–2418, (614) 255–2400, TDD (614) 255–2554, David M. Douglas.

Oklahoma State Office, 100 USDA, Suite 108, Stillwater, OK 74074–2654, (405) 742–1000, TDD (405) 742–1007, Michael W. Schrammel.

Oregon State Office, 101 SW. Main, Suite 1410, Portland, OR 97204–3222, (503) 414–3300, TDD (503) 414–3387, Joe Sahlfeld (Acting).

Pennsylvania State Office, One Credit Union Place, Suite 330, Harrisburg, PA 17110–2996, (717) 237–2299, TDD (717) 237–2261, Gary Rothrock.

Puerto Rico State Office, IBM Building—Suite 601, 654 Munos Rivera Avenue, Hato Rey, PR 00918–6106, (787) 766–5095, TDD (787) 766–5332, Ramon Melendez.

Rhode Island, Served by Massachusetts State Office.

South Carolina State Office, Strom Thurmond Federal Building, 1835 Assembly Street, Room 1007, Columbia, SC 29201, (803) 253–5163, TDD (803) 765–5697, Larry D. Floyd.

South Dakota State Office, Federal Building, Room 210, 200 Fourth Street, SW., Huron, SD 57350, (605) 352–1100, TDD (605) 352–1147, Roger Hazuka.

Tennessee State Office, Suite 300, 3322 West End Avenue, Nashvile, TN 37203–1084, (615) 783–1300, TDD (615) 783–1397, Keith Head.

Texas State Office, Federal Building, Suite 102, 101 South Main, Temple, TX 76501, (254) 742–9700, TDD (254) 742–9712, Francesco Valentin.

Utah State Office, Wallace F. Bennett Federal Building, 125 South State Street, Room 4311, P.O. Box 11350, Salt Lake City, UT 84147–0350, (801) 524–4326, TDD (801) 524–3309, Bonnie Carrig.

Vermont State Office, City Center, 3rd Floor, 89 Main Street, Montpelier, VT 05602, (802) 828–6000, TDD (802) 223–6365, Rhonda Shippee.

Virgin Islands, Served by Florida State Office.

Virginia State Office, Culpeper Building, Suite 238, 1606 Santa Rosa Road, Richmond, VA 23229, (804) 287–1550, TDD (804) 287–1753, Carrie Schmidt.

Washington State Office, 1835 Black Lake Boulevard, SW., Suite B, Olympia, WA 98512–5715, (509) 664–0203, Sandi Boughton.

Western Pacific Territories, Served by Hawaii State Office.

West Virginia State Office, Federal Building, 75 High Street, Room 320, Morgantown, WV 26505–7500, (304) 284–4860, TDD (304) 284–4836, Dianne Crysler.

Wisconsin State Office, 4949 Kirschling Court, Stevens Point, WI 54481, (715) 345–7614, TDD (715) 345–7610, Mark Brodziski.

Wyoming State Office, Federal Building, Room 1005, 100 East B, P.O. Box 820, Casper, WY 82602, (307) 261–6300, TDD (307) 261–6333, Jack Hyde.

Dated: July 22, 2003.

Arthur A. Garcia

Administrator, Rural Housing Service.

United States Department of Agriculture

Rural Housing Service

Rural Community Development Initiative Grant Agreement

[OMB No. 0575–0180]

THIS GRANT AGREEMENT (Agreement), effective the date the Agency official signs the document, is a contract for receipt of grant funds under the Rural Community Development Initiative (RCDI).

BETWEEN _____

_____

a private or public or tribal organization, (Grantee or Intermediary) and the United States of America acting through the Rural Housing Service (the Agency), Department of Agriculture, (Grantor), for the benefit of recipients listed in Grantee's application for the grant.

WITNESSETH:

The principal amount of the grant is $_____ (Grant Funds). Matching funds, in an amount equal to the grant funds, will be provided by Grantee. The Grantee and Grantor will execute Form RD 1940–1, ''Request for Obligation of Funds.''

WHEREAS,

Grantee will provide a program of financial and technical assistance to develop the capacity and ability of nonprofit organizations, low-income rural communities, or federally recognized tribes to undertake projects related to housing, community facilities, or community and economic development in rural areas;

According to the Paperwork Reduction Act of 1995, no persons are required to respond to a collection of information unless it displays a valid OMB control number. The valid OMB control number for this information collection is 0575–0180. The time required to complete this information collection is estimated to average 30 minutes per response, including the time for reviewing instructions, searching existing data sources, gathering and maintaining the data needed, and reviewing the collection of information.

NOW, THEREFORE, in consideration of the grant;

Grantee agrees that Grantee will:

A. Provide a program of financial and technical assistance in accordance with the proposal outlined in the application, (see Attachment A), the terms of which are incorporated with this Agreement and must be adhered to. Any changes to the approved program of financial technical assistance must be approved in writing by the Grantor;

B. Use Grant Funds only for the purposes and activities specified in the application package approved by the Agency including the approved budget. Any uses not provided for in the approved budget must be approved in writing by the Agency in advance;

C. Charge expenses for travel and per diem that will not exceed the rates paid Agency employees for similar expenses. Grantees and recipients will be restricted to traveling coach class on common carrier airlines. Lodging rates may exceed the Government rate by a maximum of 20 percent. Meals and incidental expenses will be reimbursed at the same rate used by Agency employees, which is based upon location. Mileage and gas will be reimbursed at the existing Government rate. Rates can be accessed on the Internet at http://policyworks.gov/perdiem;

D. Charge meeting expenses in accordance with 31 U.S.C. 1345. Grant funds may not be used for travel, transportation, and subsistence expenses for a meeting. Matching funds may be used to pay these expenses. Any meeting or training not delineated in the application must be approved by the Agency to verify compliance with 31 U.S.C. 1345.

E. Request quarterly reimbursement for grant activities during the previous quarter. Reimbursement will be made on a pro rata basis with matching funds. Form SF 270, ''Request for Advance or Reimbursement,'' will be used to request reimbursement. A project performance report, in narrative form, and a financial report, reflecting the activities conducted, must accompany the request for reimbursement. Matching fund usage must be included in all reports.

F. Provide periodic reports as required by the Grantor. A financial status report and a project performance report will be required on a quarterly basis (due 30 working days after each calendar quarter). The financial status report must show how grant funds and matching funds have been used to date. A final report may serve as the last quarterly report. Grantees shall constantly monitor performance to ensure that time schedules are being met and projected goals by time periods are being accomplished. The project performance reports shall include, but are not limited to, the following:

1. Describe the activities that the funds reflected in the financial status report were used for;

2. A comparison of actual accomplishments to the objectives for that period;

3. Reasons why established objectives were not met, if applicable;

4. Problems, delays, or adverse conditions which will affect attainment of overall program objectives, prevent meeting time schedules or objectives, or preclude the attainment of particular objectives during established time periods. This disclosure shall be accomplished by a statement of the action taken or planned to resolve the situation;

5. Objectives and timetables established for the next reporting period;

6. If available, a summary of the race, sex, and national origin of the recipients and a summary from the recipients of the race, sex, and national origin of the beneficiaries; and

7. The final report will also address the following:

(a) What have been the most challenging or unexpected aspects of this program?

(b) What advice would you give to other organizations planning a similar program? Please include strengths and limitations of the program. If you had the opportunity, what would you have done differently?

(c) Are there any post-grant plans for this project? If yes, how will they be financed?

(d) If an innovative approach was used successfully, the grantee must describe their program in detail for replication by other organizations and communities.

G. Consider potential recipients without discrimination as to race, color, religion, sex, national origin, age, marital status, sexual orientation, or physical or mental disability;

H. Ensure that any services or training offered by the recipient, as a result of the financial and technical assistance received, must be made available to all persons in the recipient's service area without discrimination as to race, color, religion, sex, national origin, age, marital status, sexual orientation, or physical or mental disability at reasonable rates, including assessments, taxes, or fees. Programs and activities must be delivered from accessible locations. The recipient must ensure that, where there are non-English speaking populations, materials are provided in the language that is spoken;

I. Ensure recipients are required to place nondiscrimination statements in advertisements, notices, pamphlets and brochures making the public aware of their services. The Grantee and recipient are required to provide widespread outreach and public notification in promoting any type of training or services that are available through grant funds;

J. The Grantee must collect and maintain data on recipients by race, sex, and national origin. The grantee must ensure that their recipients also collect and maintain data on beneficiaries by race, sex, and national origin as required by Title VI of the Civil Rights Act of 1964 and must be provided to the Agency for compliance review purposes;

K. Upon any default under its representations or agreements contained in this instrument, Grantee, at the option and demand of Grantor, will immediately repay to Grantor any legally permitted damages together with any legally permitted interest from the date of the default. At Grantor's election, any default by the Grantee will constitute termination of the grant thereby causing cancellation of Federal assistance under the grant. The provisions of this Agreement may be enforced by Grantor, without regard to prior waivers of this Agreement, by proceedings in law or equity, in either Federal or State courts as may be deemed necessary by Grantor to ensure compliance with the provisions of this Agreement and the laws and regulations under which this grant is made;

L. Provide Financial Management Systems that will include:

1. Accurate, current, and complete disclosure of the financial results of each grant. Financial reporting will be on an accrual basis;

2. Records that identify adequately the source and application of funds for grant-supported activities. Those records shall contain information pertaining to grant awards and authorizations, obligations, unobligated balances, assets, liabilities, outlays, and income related to Grant Funds and matching funds;

3. Effective control over and accountability for all funds, property, and other assets. Grantees shall adequately safeguard all such assets and shall ensure that they are used solely for authorized purposes;

4. Accounting records supported by source documentation; and

5. Grantee tracking of fund usage and records that show matching funds and grant funds are used in equal proportions. The grantee will provide verifiable documentation regarding matching fund usage, *i.e.*, bank statements or copies of funding obligations from the matching source.

M. Retain financial records, supporting documents, statistical records, and all other records pertinent to the grant for a period of at least three years after grant closing except that the records shall be retained beyond the three-year period if audit findings have not been resolved. Microfilm or photocopies or similar methods may be substituted in lieu of original records. The Grantor and the Comptroller General of the United States, or any of their duly authorized representatives, shall have access to any books, documents, papers, and records of the Grantee's which are pertinent to the specific grant program for the purpose of making audits, examinations, excerpts, and transcripts;

N. Provide an A–133 audit report if $300,000 or more of Federal funds are expended in a 1-year period. If Federal funds expended during a 1-year period are less than $300,000 and there is an outstanding loan balance of $300,000 or more, an audit in accordance with generally accepted government auditing standards is required. If Federal funds expended during a 1-year period are less than $300,000 and there is an outstanding loan balance of less than $300,000, a management report may be submitted on Forms RD 442–2, ''Statement of Budget, Income and Equity,'' and 442–3, ''Balance Sheet'';

O. Not encumber, transfer, or dispose of the equipment or any part thereof, acquired wholly or in part with Grantor funds without the written consent of the Grantor; and

P. Not duplicate other program activities for which monies have been received, are committed, or are applied to from other sources (public or private).

Grantor agrees that:

A. It will make available to Grantee for the purpose of this Agreement funds in an amount not to exceed the Grant Funds. The funds will be disbursed to Grantee on a pro rata basis with the Grantee's matching funds; and

B. At its sole discretion and at any time may give any consent, deferment, subordination, release, satisfaction, or termination of any or all of Grantee's grant obligations, with or without valuable consideration, upon such terms and conditions as Grantor may determine to be:

1. Advisable to further the purpose of the grant or to protect Grantor's financial interest therein; and

2. Consistent with both the statutory purposes of the grant and the limitations of the statutory authority under which it is made.

Both Parties Agree:

A. Extensions of this grant agreement may be approved by the Agency, in writing, provided in the Agency's sole discretion the extension is justified and there is a likelihood that the grantee can

accomplish the goals set out and approved in the application package during the extension period;

B. The Grantor must approve any changes in recipient or recipient composition;

C. The Grantor has agreed to give the Grantee the Grant Funds, subject to the terms and conditions established by the Grantor: PROVIDED, HOWEVER, That any Grant Funds actually disbursed and not needed for grant purposes be returned immediately to the Grantor. This agreement shall terminate 3 years from this date unless extended or unless terminated beforehand due to default on the part of the Grantee or for convenience of the Grantor and Grantee. The Grantor may terminate the grant in whole, or in part, at any time before the date of completion, whenever it is determined that the Grantee has failed to comply with the conditions of this Agreement or the applicable regulations;

D. As a condition of the Agreement, the Grantee certifies that it is in compliance with, and will comply in the course of the Agreement with, all applicable laws, regulations, Executive Orders, and other generally applicable requirements, including those contained in 7 CFR 3015.205(b), which are incorporated into this agreement by reference, and such other statutory provisions as are specifically contained herein. The Grantee will comply with title VI of the Civil Rights Act of 1964, section 504 of the Rehabilitation Act of 1973, and Executive Order 12250;

E. The Grantee will ensure that the recipients comply with title VI of the Civil Rights Act of 1964, section 504 of the Rehabilitation Act of 1973 and Executive Order 12250. Each recipient must sign Form RD 400–1, ''Equal Opportunity Agreement,'' and Form RD 400–4, ''Assurance Agreement'';

F. The provisions of 7 CFR part 3015, ''Uniform Federal Assistance Regulations,'' part 3016, ''Uniform Administrative Requirements for Grants and Cooperative Agreements to State and Local Governments,'' or part 3019, ''Uniform Administrative Requirements for Grants and Agreements with Institutions of Higher Education, Hospitals, and Other Nonprofit Organizations,'' and the fiscal year 2003 ''Notice of Funds Availability (NOFA) Inviting Applications for the Rural Community Development Initiative (RCDI)'' are incorporated herein and made a part hereof by reference; and

G. This Agreement may be terminated for cause in the event of default on the part of the Grantee or for convenience of the Grantor and Grantee prior to the date of completion of the grant purpose. Termination for convenience will occur when both the Grantee and Grantor agree that the continuation of the program will not produce beneficial results commensurate with the further expenditure of funds.

IN WITNESS WHEREOF, Grantee has this day authorized and caused this Agreement to be executed by

_____

Attest

_____

By _____

(Grantee)

(Title) _____

Date _____

UNITED STATES OF AMERICA
RURAL HOUSING SERVICE

By _____

(Grantor) (Name) (Title)

Date _____

Attachment A

[Application proposal submitted by grantee.]

[FR Doc. 03–19316 Filed 7–29–03; 8:45 am]

BILLING CODE 3410–XV–P

ARCTIC RESEARCH COMMISSION

Sunshine Act Notice

July 28, 2003

Meeting notice in Federal Register of 29th July is corrected to read: Notice is hereby given that the U.S. Arctic Research Commission will hold its 69th Meeting in Dutch Harbor, Alaska on August 4th thru 5th and continue in Anchorage, Alaska on August 6th, 2003. The Business Session open to the public will convene at 9 a.m. Monday, August 4th. The Agenda items include:

(1) Call to order and approval of the Agenda.

(2) Approval of the Minutes of the 68th Meeting.

(3) Reports from Congressional Liaisons.

(4) Agency Reports.

The focus of the Meeting will be reports and updates on programs and research projects affecting the U.S. Arctic. Presentations include a review of the research needs for civil infrastructure in Alaska.

The Business Session will reconvene at 9 a.m. Wednesday, August 6th, 2003 in Anchorage, Alaska. An Executive Session will follow adjournment of the Business Session.

Any person planning to attend this meeting who requires special accessibility features and/or auxiliary aids, such as sign language interpreters, must inform the Commission in advance of those needs.

Contact Person for More Information: Dr. Garrett W. Brass, Executive Director, Arctic Research Commission, 703–525–0111 or TDD 703–306–0090.

Garrett W. Brass,

Executive Director.

[FR Doc. 03–19512 Filed 7–28–03; 1:36 pm]

BILLING CODE 7555–01–M

DEPARTMENT OF COMMERCE

Census Bureau

Service Annual Survey

ACTION: Proposed collection; comment request.

SUMMARY: The Department of Commerce, as part of its continuing effort to reduce paperwork and respondent burden, invites the general public and other Federal agencies to take this opportunity to comment on proposed and/or continuing information collections, as required by the Paperwork Reduction Act of 1995, Public Law 104–13 (44 U.S.C. 3506(c)(2)(A)).

DATES: Written comments must be submitted on or before September 29, 2003.

ADDRESSES: Direct all written comments to Diana Hynek, Departmental Paperwork Clearance Officer, Department of Commerce, Room 6625, 14th and Constitution Avenue, NW., Washington, DC 20230 (or via the Internet at *DHynek@doc.gov*).

FOR FURTHER INFORMATION CONTACT: Requests for additional information or copies of the information collection instrument(s) and instructions should be directed to Ruth Bramblett, U.S. Census Bureau, Room 2775–FOB 3, Washington, DC 20233–6500, (301) 763–7089 or via e-mail at *ruth.ann.bramblett@census.gov*.

SUPPLEMENTARY INFORMATION:

I. Abstract

Today, about 50 percent of all economic activity is accounted for by services that are narrowly defined to exclude retail and wholesale trade. The Census Bureau currently measures the total output of these selected service industries annually in its Service Annual Survey. This survey now covers all or some of the following eight sectors: Transportation and Warehousing; Information; Finance and Insurance; Real Estate and Rental and Leasing; Professional, Scientific, and Technical Services; Administration and Support and Waste Management and

Remediation Services; Health Care and Social Assistance; Arts, Entertainment, and Recreation; and Other Services.

The Census Bureau proposes an expansion of the Service Annual Survey to provide data on product composition of service industry output and to provide data that will improve the quality of value-added measures for these service industries.

We will begin to implement, incrementally, the collection of detailed service products defined in the provisional North American Product Classification System (NAPCS) into the 2003 Service Annual Survey. Provisional NAPCS products were added to the 2001 Service Annual Survey for most of the Information Sector (NAICS 51, except 512) and Computer Systems Design and Related Services (NAICS 5415). For 2003, we plan to add provisional NAPCS products to the Motion Picture and Sound Recording Industries (NAICS 512) and to selected Financial Services (NAICS 5231 and 5239). In the 2004 Service Annual Survey, we will begin collecting NAPCS product detail for Professional, Scientific, and Technical Services (NAICS 54); Administrative Support and Waste Management and Remediation Services (NAICS 56); and Hospitals and Nursing and Residential Care Facilities (NAICS 622 and 623). We will complete NAPCS product coverage of all remaining industries in the 2005 Service Annual Survey.

We also plan to collect annual data on the cost of selected purchased services and materials in the 2003 Service Annual Survey for the following: Information (NAICS 51); selected Financial Services (NAICS 5231 and 5239); Professional, Scientific, and Technical Services (NAICS 54); Administrative and Support and Waste Management and Remediation Services (NAICS 56); and Hospitals and Nursing and Residential Care Facilities (NAICS 622 and 623). For the 2004 survey, we will begin collecting these data for all remaining industries covered in the Service Annual Survey. Key data items include the cost of materials and supplies other than for resale and contract labor; and purchased telecommunications services, software and data processing services, management and consulting services, fuels, electricity, lease and rental payments, and all other purchased services. The availability of these data will greatly improve the quality of the intermediate-inputs and value-added estimates in BEA's annual input-output and GDP by industry accounts. Annual data on purchased services and materials will also be used as indicators to update census year data collected on the Business Expenses Survey.

The Census Bureau is authorized by Title 13, United States Code, to conduct surveys necessary to furnish current data on subjects covered by the major censuses. These surveys provide continuing and timely national statistical data for the period between economic censuses.

The Bureau of Economic Analysis (BEA), the primary Federal user of these annual program statistics, uses the information in developing the national income and product accounts, compiling benchmark and annual input-output tables, and computing Gross Domestic Product (GDP) by industry. Agencies of the U.S. Department of Transportation (DOT) use the transportation related data for policy development and program management and evaluation. The Bureau of Labor Statistics (BLS) uses the data as inputs to its Producer Price Indexes and in developing productivity measurements. The Centers for Medicare and Medicaid Services (CMS) uses the health related data in the development of the National Health Expenditure Accounts. The Federal Communications Commission (FCC) uses the broadcasting and telecommunications data as a means for assessing FCC policy. The Census Bureau uses the data to provide new insight into changing structural and cost conditions that will impact the planning and design of future economic census questionnaires. Private industry also uses the data as a tool for marketing analysis.

Data are collected from all of the largest firms and from a sample of small- and medium-sized businesses selected using a stratified sampling procedure. The samples are reselected periodically, generally at 5-year intervals. The largest firms continue to be canvassed when the sample is re-drawn, while nearly all of the small- and medium-sized firms from the prior sample are replaced. We collect these data by using a mail-out/mail-back survey questionnaire.

II. Method of Collection

We collect this information by mail, fax, and telephone follow-up.

III. Data

OMB Number: 0607–0422.

Form Number: The Service Annual Survey program consists of 260 forms which are too numerous to list here.

Type of Review: Regular Submission.

Affected Public: Businesses or other for-profit organizations, not-for-profit institutions, and Government hospitals.

Estimated Number of Respondents: 50,000.

Estimated Time Per Response: On average, we expect 1 hour and 30 minutes as an estimate.

Estimated Total Annual Burden Hours: 58,249 hours.

Estimated Total Annual Cost: The cost to the respondents for fiscal year 2004 is estimated to be $1,270,993 based on the median hourly salary of $21.82 for accountants and auditors. (Occupational Employment Statistics—Bureau of Labor Statistics ''2001 National Occupational Employment and Wage Estimates'') *http://www.bls.gov/oes/2001/oes132011.htm.*

Respondent's Obligation: Mandatory.

Legal Authority: Title 13, United States Code; Sections 182, 224, and 225.

IV. Request for Comments

Comments are invited on: (a) Whether the proposed collection of information is necessary for the proper performance of the functions of the agency, including whether the information shall have practical utility; (b) the accuracy of the agency's estimate of the burden (including hours and cost) of the proposed collection of information; (c) ways to enhance the quality, utility, and clarity of the information to be collected; and (d) ways to minimize the burden of the collection of information on respondents, including through the use of automated collection techniques or other forms of information technology.

Comments submitted in response to this notice will be summarized and/or included in the request for OMB approval of this information collection; they also will become a matter of public record.

Dated: July 25, 2003.

Madeleine Clayton,

Management Analyst, Office of the Chief Information Officer.

[FR Doc. 03–19421 Filed 7–29–03; 8:45 am]

BILLING CODE 3510–07–P

DEPARTMENT OF COMMERCE

Economic Development Administration

Notice of Petitions by Producing Firms for Determination of Eligibility To Apply for Trade Adjustment Assistance

AGENCY: Economic Development Administration (EDA).

ACTION: To give all interested parties an opportunity to comment.

Petitions have been accepted for filing on the dates indicated from the firms listed below.

LIST OF PETITION ACTION BY TRADE ADJUSTMENT ASSISTANCE FOR PERIOD JUNE 21, 2003–JULY 22, 2003

Firm name	Address	Date petition accepted	Product
K & S Optics, Inc	1080 Chenango Street, Binghamton, NY 13901.	27–Jun–03	Cylindrical lenses used in optical instruments for inspecting semiconductors, telecommunication devices and astronomical instruments.
Atco Products, Inc	1002 Performance Road, Forest, VA 24551.	01–Jul–03	Seal and O-rings for the automotive and food and beverage and industrial equipment industries.
United Speaker Systems, Inc	6400 Youngerman Circle, Jacksonville, FL 32244.	01–Jul–03	Loudspeakers.
Mega Sun, Inc	3301 Locust Street, St. Louis, MO 63103.	01–Jul–03	Commercial and residential tanning beds and chemical tanning equipment.
L & R Precision Tooling, Inc	460 West & Sunburst Road, Lynchburg, VA 24502.	09–Jul–03	Machinery parts that produce parts for cellular telephones, valves and medical equipment.
Innovative Plastech, Inc	1260 Kingsland Drive, Batavia, IL 60510	09–Jul–03	Packaging trays of vacuum formed thermoplastic.
PA–TED Spring Company, Inc	137 Vincent P. Kelly Road, Bristol, CT 06010.	11–Jul–03	Springs, multiforms, and small mechanical hand and power tools for the electronics and automotive industries.
Tryco Tool & Manufacturing Co., Inc	363 South Jefferson Street, Orange, NJ 07050.	16–Jul–03	Metal stamped parts for circuit breakers, electrical panels, valves and housings, and consumer and industrial lighting.
Fast Heat, Inc	776 Oaklawn Avenue, Elmhurst, Il 60126.	16–Jul–03	Hot runner systems.
Genesee Wester, Inc. dba MetalCraft Industries, Inc.	1250 W 124th Avenue, Westminster, CO 80234.	21–Jul–03	Stamped and sheet metal products for the automotive industry.
Sunset Mold, LLC	727 Commerce Drive, Venice, FL 34292	22–Jul–03	Injection molds for rubber or plastic.

The petitions were submitted pursuant to Section 251 of the Trade Act of 1974 (19 U.S.C. 2341). Consequently, the United States Department of Commerce has initiated separate investigations to determine whether increased imports into the United States of articles like or directly competitive with those produced by each firm contributed importantly to total or partial separation of the firm's workers, or threat thereof, and to a decrease in sales or production of each petitioning firm. Any party having a substantial interest in the proceedings may request a public hearing on the matter. A request for a hearing must be received by Trade Adjustment Assistance, Room 7315, Economic Development Administration, U.S. Department of Commerce, Washington, DC 20230, no later than the close of business of the tenth calendar day following the publication of this notice.

The Catalog of Federal Domestic Assistance official program number and title of the program under which these petitions are submitted is 11.313, Trade Adjustment Assistance.

Dated: July 23, 2003.

Anthony J. Meyer,

Coordinator, Trade Adjustment and Technical Assistance.

[FR Doc. 03–19308 Filed 7–29–03; 8:45 am]

BILLING CODE 3510–24–P

DEPARTMENT OF COMMERCE

Bureau of Industry and Security

Action Affecting Export Privileges; Yaudat Mustafa Talyi a.k.a. Joseph Talyi, and International Business Services, Ltd., and Top Oil Tools, Ltd., and Uni-Arab Engineering and Oil Field Services, and Jaime Radi Mustafa, a.k.a. Radi Mustafa and Nureddin Shariff Sehweil, a.k.a. Dean Sehweil

Modification of Order Temporarily Denying Export Privileges

Through the Office of Export Enforcement (''OEE''), the Bureau of Industry and Security (''BIS''), U.S. Department of Commerce, has requested that I modify the order (''TDO'') I issued on March 29, 2003, pursuant to Section 766.24 of the Export Administration Regulations (currently codified a 15 CFR 730–774 (2003)) (''EAR''),[1] temporarily denying all U.S. export privileges of Yaudat Mustafa Talyi, a.k.a. Joseph Talyi, 888 Cross Gates Boulevard, Slidell, Louisiana 70458 (''Talyi'') and International Business Services, Ltd., 700 Gause Boulevard, Suite 304, Slidell, Louisiana 70458, 41 Chamale Cove East, Slidell, Louisiana 70460, and 2301 Covington Highway 190, Slidell, Louisiana 70460 (''IBS''). Pursuant to Sections 766.24(c) and 766.23 of the EAR, the TDO also applies to Top Oil Tools Ltd. (''Top Oil''), 41 Chamale Cove East, Slidell, Louisiana 70460, which is related to IBS and Talyi.

BIS states in its June 20, 2003 request that, based upon evidence developed since the issuance of the TDO, it believes that the following entity and individuals are also related to Talyi and IBS, and that applying the terms of the TDO to these additional related persons is necessary to prevent evasion thereof:

1. Uni-Arab Engineering and Oil Field Services (''Uni-Arab''), P.O. Box 46112, Abu Dhabi, United Arab Emirates, and, Al-Gaith Tower, Hamden Street, Flat No. 1202, Abu Dhabi, United Arab Emirates.
2. Jaime Radi Mustafa, a.k.a. Radi Mustafa (''Radi Mustafa''), 888 Cross Grates Boulevard, Slidell, Louisiana

[1] From August 21, 1994 through November 12, 2000, the Act was in lapse. During that period, the President, through Executive Order 12924, which had been extended by successive Presidential Notices, the last of which was August 3, 2000 (3 CFR, 2000 Comp. 397 (2001)), continued the EAR in effect under the International Emergency Economic Powers Act (50 U.S.C. 1701–1707 (2000)) (''IEEPA''). On November 13, 2000, the Act was reauthorized and it remained in effect through August 20, 2001. Since August 21, 2001, the Act has been in lapse and the President, through Executive Order 13222 of August 17, 2001 (3 CFR, 2001 Comp. 783 (2002)), as extended by the Notice of August 14, 2002 (3 CFR, 2002 Comp. 306 (2003)), has continued the EAR in effect under IEEPA.

70458, and, P.O. Box 46112, Abu Dhabi, United Arab Emirates.

3. Nureddin Shariff Sehweil, a.k.a. Dean Sehweil (''Sehweil''), 888 Cross Grates Boulevard, Slidell, Louisiana 70458, and, 106 Everest Drive, Slidell, Louisiana, 70461, and, P.O. Box 46112, Abu Dhabi, United Arab Emirates.

(Collectively, Uni-Arab, Radi Mustafa, and Sehweil are referred to as ''proposed related persons.'')

On July 7, 2003, attorneys representing proposed related persons filed a timely opposition to BIS's request that I modify the TDO.

On July 14, 2003, BIS filed its Reply to Respondents' Opposition.

Having reviewed all submissions, I have found the following:

• A close relationship in the conduct of trade or business existed in the past, and continues to exist, between the parties subject to the TDO and the proposed related persons;

• After the TDO was issued, the proposed related persons knew of, and participated in, attempted export transactions in violation of the TDO; and

• The proposed related persons have engaged in business activities with Libya concerning items subject to the EAR without obtaining necessary authorization.

Consequently, I have determined that it is necessary to name the above-named entity and individuals as persons related to Talyi and IBS in order to prevent evasion of the terms and conditions of the TDO.

It is therefore ordered that the terms of the TDO denying the export privileges of Talyi and his company IBS, and related person Top Oil, are hereby made applicable to Uni-Arab, Radi Mustafa, and Sehweil as related persons.

In accordance with the provisions of Section 766.23(c) of the EAR, related persons may appeal this Order by filing a full written statement in support of the appeal with the Office of the Administrative Law Judge, U.S. Coast Guard ALJ Docketing Center, 40 South Gay Street, Baltimore, Maryland 21202–4022.

This modification of the TDO is effective immediately and shall remain in effect until the expiration of the TDO.

A copy of this modification to the TDO shall be served on Uni-Arab, Radi Mustafa, and Sehweil, and shall be published in the **Federal Register.**

Entered this 24th day of July, 2003.

Lisa A. Prager,

Acting Assistant Secretary for Export Enforcement.

[FR Doc. 03–19303 Filed 7–29–03; 8:45 am]

BILLING CODE 3510–DT–M

DEPARTMENT OF COMMERCE

International Trade Administration

A-570–855

Certain Non-Frozen Apple Juice Concentrate From the People's Republic of China: Preliminary Results of New Shipper Review

AGENCY: Import Administration, International Trade Administration, Department of Commerce.

ACTION: Notice of Preliminary Results of New Shipper Review.

SUMMARY: The Department of Commerce is currently conducting a new shipper review of the antidumping duty order on non-frozen apple juice concentrate from the People's Republic of China, covering the period June 1, 2002, through November 30, 2002.

The new shipper review covers one exporter: Yantai Golden Tide Fruits & Vegetable Food Co., Ltd. We preliminarily determine that sales of non-frozen apple juice concentrate from the People's Republic of China were made below normal value during the period of review by Yantai Golden Tide Fruits & Vegetable Food Co., Ltd.

If these preliminary results are adopted in our final results of review, we will instruct the U.S. Bureau of Customs and Border Protection to assess antidumping duties based on the difference between export price and normal value for Yantai Golden Tide Fruits & Vegetable Food Co., Ltd.

Interested parties are invited to comment on these preliminary results. We will issue the final results no later than 90 days from the date of issuance of these preliminary results.

EFFECTIVE DATE: July 30, 2003.

FOR FURTHER INFORMATION CONTACT: Audrey Twyman, Stephen Cho or John Brinkmann, Import Administration, International Trade Administration, U.S. Department of Commerce, 14th Street and Constitution Avenue, NW, Washington, DC 20230; telephone: (202) 482–3534, (202) 482–3798 or (202) 482–4126, respectively.

SUPPLEMENTARY INFORMATION:

Period of Review

The period of review (''POR'') is June 1, 2002 through November 30, 2002.

Background

On December 17, 2002, the Department received a timely request from Yantai Golden Tide Fruits & Vegetable Food Co., Ltd. (''Golden Tide''), to conduct a new shipper review.

On January 30, 2003, we published a notice of initiation of a new shipper review of the antidumping duty order on non-frozen apple juice concentrate (''AJC'') from the People's Republic of China (''PRC''). *See Non-Frozen Apple Juice Concentrate from the People's Republic of China: Initiation of Antidumping New Shipper Review*, 68 FR 4762 (January 30, 2003). On January 31, 2003, the Department sent a questionnaire to Golden Tide and received a response on March 21, 2003, and a response to a supplemental questionnaire on April 2, 2003.

On June 26, 2003, the Department invited interested parties to comment on surrogate country selection and to provide publicly available information for valuing the factors of production. We received a response from Golden Tide on July 11, 2003.

The Petitioners have not made any written submissions in this proceeding.[1]

Scope of the Order

The product covered by this order is certain non-frozen apple juice concentrate (≥AJC''). Certain AJC is defined as all non-frozen concentrated apple juice with a Brix scale of 40 or greater, whether or not containing added sugar or other sweetening matter, and whether or not fortified with vitamins or minerals. Excluded from the scope of this order are: frozen concentrated apple juice; non-frozen concentrated apple juice that has been fermented; and non-frozen concentrated apple juice to which spirits have been added.

The merchandise subject to this order is classified in the *Harmonized Tariff Schedule of the United States* (''HTSUS'') at subheadings 2106.90.52.00, and 2009.70.00.20 before January 1, 2002, and 2009.79.00.20 after January 1, 2002. Although the HTSUS subheadings are provided for convenience and customs purposes, the written description of the scope of the order is dispositive.

Separate Rates Determination

The Department has treated the PRC as a nonmarket economy (''NME'') country in all previous antidumping

[1] Petitioners are Tree Top, Inc., Knouse Foods Cooperative, Inc., Green Valley Packers, Mason County Fruit Packers Co-op, Inc. and Coloma Frozen Foods, Inc.

cases. In accordance with section 771(18)(C)(i) of the Tariff Act of 1930, as amended (''the Act''), any determination that a foreign country is an NME shall remain in effect until revoked by the Department. None of the parties to this proceeding have contested such treatment in this review. Moreover, parties to this proceeding have not argued that the PRC AJC industry is a market-oriented industry.

Therefore, we are treating the PRC as an NME country within the meaning of section 773(c) of the Act. We allow companies in NME countries to receive separate antidumping duty rates for purposes of assessment and cash deposits when those companies can demonstrate an absence of government control, both in law and in fact, with respect to export activities.

To establish whether a company operating in an NME country is sufficiently independent to be entitled to a separate rate, the Department analyzes each exporting entity under the test established in the *Final Determination of Sales at Less Than Fair Value: Sparklers from the People's Republic of China*, 56 FR 20588 (May 6, 1991) (''*Sparklers*''), as amplified by the *Final Determination of Sales at Less Than Fair Value: Silicon Carbide from the People's Republic of China*, 59 FR 22585 (May 2, 1994) (''*Silicon Carbide*''). Under the separate rates criteria, the Department assigns separate rates in NME cases only if the respondents can demonstrate the absence of both *de jure* and *de facto* governmental control over export activities.

Absence of *De Jure* Control

Evidence supporting, though not requiring, a finding of *de jure* absence of government control over export activities includes: 1) an absence of restrictive stipulations associated with the individual exporter's business and export licenses; 2) any legislative enactments decentralizing control of companies; and 3) any other formal measures by the government decentralizing control of companies.

Golden Tide has placed two documents on the record to demonstrate absence of *de jure* government control, ''Foreign Trade Law of the People's Republic of China'' (''Foreign Trade Law'') and the ''Administrative Regulations of the People's Republic of China Governing the Registration of Legal Corporations'' (''Administrative Regulations''). The Foreign Trade Law grants autonomy to foreign trade operators in management decisions and establishes accountability for their own profits and losses. In prior cases, the Department has analyzed the Foreign Trade Law and found that it establishes an absence of de jure control. *See, e.g.*, Notice of Preliminary Determination of Sales at Less Than Fair Value and Postponement of Final Determination: Certain Partial-Extension Steel Drawer Slides with Rollers from the People's Republic of China, 60 FR 29571 (June 5, 1995); Final Determination of Sales at Less Than Fair Value: Certain Preserved Mushrooms from the People's Republic of China, 63 FR 72255 (December 31, 1998) (''Mushrooms''). We have no new information in this segment of the proceeding which would cause us to reconsider this determination.

The Administrative Regulations safeguard social and economic order, as well as establishing an administrative system for the registration of corporations. The Department has reviewed the Administrative Regulations and concluded that they show an absence of *de jure* control by requiring companies to bear civil liabilities independently, thereby decentralizing control of companies.

According to the respondent, AJC exports are not affected by quota allocations or export license requirements. The Department has examined the record in this case and does not find any evidence that AJC exports are affected by quota allocations or export license requirements. By contrast, the evidence on the record demonstrates that the producers/exporters have the autonomy to set the price at whatever level they wish through independent price negotiations with their foreign customers and without government interference.

Accordingly, we preliminarily determine that there is an absence of *de jure* government control over export pricing and marketing decisions of the respondent.

Absence of *De Facto* Control

De facto absence of government control over exports is based on four factors: 1) whether each exporter sets its own export prices independently of the government and without the approval of a government authority; 2) whether each exporter retains the proceeds from its sales and makes independent decisions regarding the disposition of profits or financing of losses; 3) whether each exporter has the authority to negotiate and sign contracts and other agreements; 4) whether each exporter has autonomy from the government regarding the selection of management (*see Silicon Carbide*, 59 FR at 22587; *Sparklers*, 56 FR at 20589).

As stated in previous cases, there is evidence that certain enactments of the PRC central government have not been implemented uniformly among different sectors and/or jurisdictions in the PRC. *See Mushrooms*, 63 FR at 72255. Therefore, the Department has determined that an analysis of *de facto* control is critical in determining whether respondents are, in fact, subject to a degree of governmental control which would preclude the Department from assigning separate rates.

The Department has reviewed the record in this case and finds the following facts about the respondent: (1) it establishes its own export prices; (2) it negotiates contracts without guidance from any governmental entities or organizations; (3) it makes its own personnel decisions; (4) it retains the proceeds from export sales and uses profits according to its business needs without any restrictions; (5) it does not coordinate or consult with other exporters regarding pricing decisions.

The information on the record supports a preliminary finding that there is an absence of *de facto* governmental control of the export functions of this company. Consequently, we preliminarily determine that Golden Tide has met the criteria for the application of a separate rate.

Fair Value Comparisons

To determine whether sales of the subject merchandise by Golden Tide to the United States were made at prices below normal value (''NV''), we compared Golden Tide's export price to NV, as described in the ''Export Price'' and ''Normal Value'' sections of this notice, below.

Export Price

For the sale made by Golden Tide during the POR we used export price, in accordance with section 772(a) of the Act, because the subject merchandise was sold to unaffiliated purchasers in the United States prior to importation into the United States and because the constructed export price methodology was not warranted by other circumstances.

We calculated export price based on Golden Tide's selling price to an unaffiliated purchaser. In accordance with section 772(c) of the Act, we deducted from this price amounts for foreign inland freight from plant to warehouse and from warehouse to port, foreign brokerage and handling, U.S. customs broker fees, international freight, U.S. inland freight from port to warehouse, U.S. warehousing expense, and U.S. customs duty. We valued the deductions for foreign inland freight, international freight, and brokerage and

handling using surrogate data, which was based on Indian freight costs. (Our surrogate-country selection is discussed in the ''*Normal Value*'' section of this notice, below.) Because ocean freight was provided by a PRC-owned company, we valued this deduction using amounts charged by market-economy providers.

Normal Value

Section 773(c)(1) of the Act provides that the Department shall determine NV using a factors-of-production methodology if: (1) the subject merchandise is exported from an NME country, and (2) the Department finds that the available information does not permit the calculation of NV under section 773(a) of the Act. We have no basis to determine that the available information would permit the calculation of NV using PRC prices or costs. Therefore, we calculated NV based on factors data in accordance with section 773(c) of the Act and 19 CFR 351.408(c).

Under the factors-of-production methodology, we are required to value, to the extent possible, the NME producer's inputs in a market-economy country that is at a comparable level of economic development and that is a significant producer of comparable merchandise. We chose Poland, a significant producer of non-frozen apple juice concentrate, as the primary surrogate country on the basis of the criteria set out in sections 773(c)(2)(B) and 773(c)(4) of the Act and in 19 CFR 351.408(b). Although Poland was not on the Department's list of most comparable economies, we were unable to establish that these comparable economies were significant producers of merchandise comparable to non-frozen apple juice concentrate.

We have relied upon publicly available values from Poland for the major input, juice apples, as well as for electricity, factory overhead, selling, general and administrative expenses (''SG&A''), and profit ratios. Because we were unable to obtain Polish data to value the other miscellaneous factors of production, we have valued these inputs using public information on the record for India, one of the comparable economies we identified. *See* the June 17, 2003, Memorandum to Audrey Twyman from Ron Lorentzen, ''New Shipper Review for Non-frozen Apple Juice Concentrate from the People's Republic of China (PRC): Request for a List of Surrogate Countries.''

Because some of the Indian data was not contemporaneous with the POR we inflated the values to the POR using the Indian wholesale price indices (''WPI'') published by the International Monetary Fund. *See* the July 23, 2003, Memorandum to Jeffrey May from Susan Kuhbach, ''Surrogate Selection and Valuation - Non-Frozen Apple Juice Concentrate from China: Yantai Golden Tide Fruits & Vegetable Food Co., Ltd.'' (''*Surrogate Country Memo*''), for a further discussion of our surrogate selection, which is on file in the Department's Central Records Unit in Room B-099 of the main Department building (''CRU'').

Pursuant to the Department's factors-of-production methodology as provided in section 773(c) of the Act and 19 CFR 351.408(c), we valued Golden Tide's reported factors of production by multiplying them by the following values[2]:

Juice Apples: We have valued juice apples using prices of juice apples in Poland, covering 20 weeks of the POR. This information was provided to the Department by the Foreign Agriculture Service (''FAS'') at the U.S. Embassy in Warsaw, Poland, which obtained it from the Polish Foreign Agricultural Markets Monitoring Unit/Foundation for Aid Programs for Agriculture and the Institute of Agricultural Economics. The average value of these 20 weekly prices is $45.30 per metric ton.

Processing Agents: We valued pectinex enzyme, amylase enzyme, bentonite, gelatin, silica gel, and activated carbon for the POR using the *World Trade Atlas* data for India, which is based on data reported by the DGCI&S of the Ministry of Commerce, which also supplies the same data for the *Monthly Statistics of the Foreign Trade of India, Volume II: Imports* (''Indian import statistics'').

Labor: Pursuant to 19 CFR 351.408(c)(3), we valued labor using the regression-based wage rate for the PRC published by Import Administration on its website.

Electricity and Steam Coal: To value electricity, we used Polish industrial electricity rate data from the *Energy Prices & Taxes - Quarterly Statistics (Third Quarter 2000)* published by the International Energy Agency. We used the 1999 price and inflated it to the POR. We determined that the most contemporaneous and detailed information regarding steam coal was from the *Energy Data Directory & Yearbook (2001/2002)* published by Tata Energy Research Institute (''TERI''). We used the Indian data because, unlike the Polish data, the Indian price of steam coal is segregated by useful heat value (''UHV''). We used the January 2001 price and inflated it to the POR using the Indian WPI.

Factory Overhead, SG&A, and Profit: We derived ratios for factory overhead, SG&A, and profit using the 2002 financial statement of Agros, a public company in Poland that produces products similar to the subject merchandise.

Packing Materials: We calculated values for aseptic bags and labels using the *World Trade Atlas* data for India for the POR. We converted values from a per-kilogram to a per-piece basis, where necessary.

For steel drums, we could not find a reliable current Indian value. Therefore, we used a 1994 Indonesian price and inflated it using the Indonesian WPI.

Inland Freight Rates: To value truck freight rates, we used an April 2002 article from the *Iron and Steel Newsletter*, which quotes information derived from the website, www.infreight.com. We used the April 2002 price and inflated it to the POR using the Indian WPI. With regard to rail freight, we based our calculation on posted rail rates from the Indian Railways at *http://www.indianrailways.gov.in*. We calculated an average per-kilometer per-metric ton rate.

International Freight: We used rates collected from the Descartes online system to value Golden Tide's international freight.

Brokerage and Handling: The brokerage and handling amount we used in our calculations was derived from an amount charged in Indian Rupees by and Indian shipping company. This figure was taken from the public version of a U.S. sales listing reported in the questionnaire response submitted by Meltroll Engineering for *Stainless Steel Bar from India; Final Results of Antidumping Duty Administrative Review and New Shipper Review and Partial Rescission of Administrative Review*, 65 FR 48965 (August 10, 2000) (placed on the record of this segment of the proceeding on July 23, 2003, as an attachment to the *FOP Memo*). Because this information is not contemporaneous with the POR, we adjusted the data to the POR by using the Indian WPI.

By-products: Golden Tide reported a by-product resulting from production of the subject merchandise, apple pomace. Because we were unable to find reliable values in any potential surrogate country for apple pomace we used U.S. prices. We will continue to look for an appropriate surrogate for purposes of

[2] For a complete description of the factor values used, *see* the Memorandum to Susan Kuhbach: ''Factors of Production Values Used for the Preliminary Results: Yantai Golden Tide Fruits & Vegetable Food Co., Ltd.'' (''*FOP Memo*''), dated July 23, 2003, which is on file in the CRU.

the final results. Apple pomace was valued using an April 2000 study published by the University of Georgia.

Preliminary Results of the Review

We preliminary determine that the following dumping margin exists for the period June 1, 2002, through November 30, 2002:

Exporter	Producer	Weighted-average margin percentage
Yantai Golden Tide Fruits & Vegetable Food Co., Ltd.	Yantai Golden Tide Fruits & Vegetable Food Co., Ltd.	12.36 %

Public Comment

Pursuant to 19 CFR 351.310(c), any interested party may request a hearing within 30 days of the date of publication of this notice. Any hearing, if requested, will be held approximately 42 days after the publication of this notice, or the first workday thereafter. Issues raised in hearings will be limited to those raised in the case and rebuttal briefs. Pursuant to 19 CFR 351.309(c), interested parties may submit case briefs within 30 days of the date of publication of this notice. Furthermore, as discussed in 19 CFR 351.309(d)(2), rebuttal briefs, which must be limited to issues raised in the case briefs, may be filed not later than 35 days after the date of publication of this notice. Parties who submit case briefs or rebuttal briefs in this new shipper review are requested to submit with each argument (1) a statement of the issue and (2) a brief summary of the argument with an electronic version included.

The Department will publish the final results of this new shipper review, including the results of its analysis of issues raised in any such written briefs or hearing, within 90 days of the date of issuance of these preliminary results, pursuant to section 751(a)(2)(B)(iv) of the Act.

Assessment Rates

Pursuant to 19 CFR 351.212(b), the Department calculates an assessment rate for each importer of the subject merchandise. Upon issuance of the final results of this new shipper review, if any importer/customer-specific assessment rates calculated in the final results are above *de minimis* (*i.e.*, at or above 0.5 percent), the Department will issue appraisement instructions directly to the U.S. Bureau of Customs and Border Protection to assess antidumping duties on appropriate entries by applying the assessment rate to the entered value of the merchandise.

For assessment purposes, we calculate importer-specific assessment rates for the subject merchandise by aggregating the dumping duties due for all U.S. sales to each importer and dividing the amount by the total entered value of the sales to that importer. The Department will issue assessment instructions directly to the U.S. Bureau of Customs and Border Protection within 15 calendar days of the publication of the final results of this new shipper review in the **Federal Register**.

Cash Deposit Requirements for New Shipper Review

Bonding will no longer be permitted to fulfill security requirements for shipments from Golden Tide of AJC from the PRC on or after the publication date of the final results of this new shipper review. Instead, the following cash deposit requirements will be effective upon publication of the final results of the new shipper review for all shipments from Golden Tide of subject merchandise entered, or withdrawn from warehouse, for consumption on or after the publication date: (1) for subject merchandise manufactured and exported by Golden Tide, we will require a cash deposit at the rate established in the final results; and (2) for subject merchandise exported by Golden Tide but not manufactured by it, the cash deposit will be the PRC countrywide rate (*i.e.*, 51.74 percent).

Notification to Importers

This notice also serves as a preliminary reminder to importers of their responsibility under 19 CFR 351.402(f) to file a certificate regarding the reimbursement of antidumping duties prior to liquidation of the relevant entries during this review period. Failure to comply with this requirement could result in the Secretary's presumption that reimbursement of antidumping duties occurred and the subsequent assessment of double antidumping duties.

We are issuing and publishing these results in accordance with section 751(a)(2)(B) ofthe Act and 19 CFR 351.214.

Dated: July 23, 2003.

Joseph A. Spetrini,

Acting Assistant Secretary for Grant Aldonas, Under Secretary.

[FR Doc. 03–19430 Filed 7–29–03; 8:45 am]

BILLING CODE 3510–DS–S

DEPARTMENT OF COMMERCE

International Trade Administration

[C–533–821]

Certain Hot-Rolled Carbon Steel Flat Products From India: Extension of Preliminary Results of Countervailing Duty Administrative Review

AGENCY: Import Administration, International Trade Administration, Department of Commerce.

ACTION: Notice of extension of time limit for preliminary results of countervailing duty administrative review.

EFFECTIVE DATE: July 30, 2003.

FOR FURTHER INFORMATION CONTACT: Tipten Troidl, Office of AD/CVD Enforcement VI, Import Administration, International Trade Administration, U.S. Department of Commerce, 14th Street and Constitution Ave, NW., Washington, DC 20230; telephone: (202) 482–2786.

Statutory Time Limits

Section 751(a)(3)(A) of the Tariff Act of 1930, as amended (the Act), requires the Department to make a preliminary determination within 245 days after the last day of the anniversary month of an order/finding for which a review is requested and a final determination within 120 days after the date on which the preliminary determination is published. However, if it is not practicable to complete the review within the time period, section 751(a)(3)(A) of the Act allows the Department to extend these deadlines to a maximum of 365 days and 180 days, respectively.

Background

On January 22, 2003, the Department published a notice of initiation of administrative review of the countervailing duty order on certain hot-rolled carbon steel flat products from India, covering the period April 20, 2001, through December 31, 2002 (*see* 68 FR 3009). The preliminary results are currently due no later than September 2, 2003.

Extension of Preliminary Results of Review

In this administrative review, we are currently reviewing new subsidy allegations; including: debt forgiveness, debt restructuring, suspension of interest payments, and debt-to-equity conversions. In addition, we are reviewing numerous programs found countervailable during the original investigation. In order to complete our analysis, we not only require additional information, but also additional time. *See* July 24, 2003, Memorandum to Holly A. Kuga, Acting Deputy Assistant Secretary, RE: Extension of Preliminary Results: Certain Hot-Rolled Carbon Steel Flat Products from India. As a result, it is not practicable to complete the preliminary results of this review within the original time limit. Therefore, the Department is extending the time limits for completion of the preliminary results until no later than December 31, 2003.

This extension is in accordance with section 751(a)(3)(A) of the Act.

Dated: July 24, 2003.

Holly A. Kuga,

Acting Deputy Assistant Secretary for Import Administration.

[FR Doc. 03–19429 Filed 7–29–03; 8:45 am]

BILLING CODE 3510–DS–P

DEPARTMENT OF COMMERCE

National Oceanic and Atmospheric Administration

[I.D. 071703A]

Fisheries of the Caribbean, Gulf of Mexico, and South Atlantic; Reef Fish Fishery of the Gulf of Mexico; Coastal Migratory Pelagic Resources of the Gulf of Mexico and South Atlantic; Exempted Fishing Permit

AGENCY: National Marine Fisheries Service (NMFS), National Oceanic and Atmospheric Administration (NOAA), Commerce.

ACTION: Notice of receipt of an application for an exempted fishing permit; request for comments.

SUMMARY: NMFS announces the receipt of an application for an exempted fishing permit (EFP) from Mr. Jody Symons on behalf of Florida Offshore Aquaculture, Inc. of Madeira Beach, FL. If granted, the EFP would authorize a feasibility study for 24 months of net cage culture of cobia, mahi-mahi, greater amberjack, Florida pompano, red snapper and cubera snapper at a site approximately 33 statute miles (53 km) WSW. of John's Pass, FL. According to the applicant, the purpose of the proposed study is to determine the feasibility to grow commercial quantities of native fish species in the offshore environment of the eastern Gulf of Mexico using mariculture techniques. The applicant proposes to place hatchery-raised juvenile fish in net cages, feed them, allow them to grow for approximately 4 months, harvest each cage three times annually, land them in Florida, and sell them. No wild-caught fish will be involved in this study.

DATES: Comments must be received no later than 5 p.m., eastern time, on August 29, 2003.

ADDRESSES: Comments on the application must be mailed to Peter Eldridge, Southeast Regional Office, NMFS, 9721 Executive Center Drive N., St. Petersburg, FL 33702. Comments also may be sent via fax to 727–570–5583. Comments will not be accepted if submitted via e-mail or Internet. The application and related documents are available for review upon written request to the address above.

FOR FURTHER INFORMATION CONTACT: Peter Eldridge, 727–570–5305; fax: 727–570–5583; e-mail: peter.eldridge@noaa.gov.

SUPPLEMENTARY INFORMATION: The EFP is requested under the authority of the Magnuson-Stevens Fishery Conservation and Management Act (16 U.S.C. 1801 *et seq.*), and regulations at 50 CFR 600.745(b), concerning scientific research activity, exempted fishing permits, and exempted educational activity.

Florida Offshore Aquaculture, Inc., of Madeira Beach, FL intends to conduct a feasibility study for 24 months to determine if it is practical to raise commercial quantities of cobia, mahi-mahi, greater amberjack, red snapper and cubera snapper in nets at a site approximately 33 statute miles (53 km) WSW. of John's Pass, FL (27°34.79′ N. lat., 83°16.11′ W. long.; depth 109 ft (33.2 m)). An important objective of the project is to determine environmentally responsible procedures that should be employed to ensure minimal environmental impacts on native species as well as the habitat surrounding the project, which will be approximately 1 square mile in area. The proposed site is over sandy bottom and is not in a traditional fishing area for recreational and commercial fisheries. Thus, there should be minimal interaction between the mariculture site and fishermen.

Four to eight Sea Station TM cages will be deployed. These cages have a central steel support spar within a steel tubular ring with spoke lines radiating from the top and bottom of the spar to the ring and a net stretched over the outside of this spar and cable frame. This design is self-supporting and provides total encasement of the fish; each cage is 53 ft (16 m) tall and 83 ft (25 m) in diameter and will contain a maximum fish biomass of 165,000 lb (75,000 kg). The cages utilize a net made out of spectra fiber and are stretched tightly over the entire structure, which greatly reduces the possibility of entanglement by sea turtles and marine mammals. The cages will be submerged except during harvesting and should pose no foreseeable threat to sea birds. Each cage will be attached to four 2,000–kg Danforth anchors to prevent movement from the site.

The stocking schedule is as follows: Cobia will be the first species stocked. There will be four 6–month stocking phases. During the first phase, four cages will be deployed, stocked and harvested; during the second phase stocking and harvesting of the initial four cages will continue; during the third phase four additional cages will be deployed with cobia, mahi-mahi, greater amberjack, Florida pompano, red snapper and cubera snapper. During the fourth phase stocking and harvesting of all species will occur.

Disease-free fingerlings will be obtained from the Aquaculture Center of the Florida Keys (59300 Overseas Highway, Marathon, FL, phone 305–743–6135) and the Marine Science Institute of the University of Texas (750 Channel View Drive, Port Aransas, TX, phone 361–749–6795). In the event that the fish in the cages develop diseases or parasites from wild sources and treatments are indicated, they will be treated with U.S. Food and Drug Administration (FDA)-approved vaccines, drugs or antibiotics only. This will be done in their feed or, in the extreme case, the cage(s) will be enclosed with material and will be treated with U.S. FDA-approved vaccines, drugs or antibiotics in solution. If any fish are found to have commutable virus, the entire population of the affected cage will be immediately removed and destroyed. The brood stock and their spawn will be genetically tagged using the satellite DNA method. The Florida Fish and Wildlife Conservation Commission (FFWCC) facility at Port Manatee, FL, will conduct this phase of the research.

Feeds for this project will be commercially manufactured diets formulated for the species being fed from established aquaculture feed companies. The pelletized feeds will contain essential feed ingredients only and will minimize introduction of

materials not utilized in the digestive process of the grow out species. No bycatch from any fisheries will be used as a source of food for this project.

There will be a comprehensive environmental monitoring program for the project developed by the Environmental Protection Agency. The monitoring program is described in Appendix 2 of the environmental assessment prepared for granting of an EFP for the project, should the project be approved. A copy of the environmental assessment can be obtained from Peter J. Eldridge (see **ADDRESSES**).

The monitoring program will utilize a transect approach to sampling. Benthic and water quality samples will be collected at intervals on two transects passing through the center of the cluster of cages. Each transect will be 2 km in length, and the transects intersect at the center of the cage cluster. The first transect lies parallel to the predominate current direction, and the second transect lies perpendicular to the first, or the predominate current. Control samples, water and benthos unaffected by cage operations, will be collected at the end of each transect. Prior to sampling, a description of the bathymetric and topographic characteristics of the mariculture site will be conducted.

During each sampling event, at the beginning and end of the period of active sampling, sea surface conditions (wind, wave amplitude and frequency, rain, cloud cover, and air temperature) will be recorded. Also, current stocking density, feeding rate reported on a per-cage and total-farm basis, and an analysis of feed contents (feed label information) will be noted.

Physical and chemical water quality parameters will include dissolved oxygen, salinity, temperature, turbidity, total suspended solids, chlorophyll, ammonia-N, nitrite-N, nitrate-N and total phosphate. The above water quality parameters will be assessed at mid-water and a meter from the bottom at each of the water quality sampling sites. Current speed and direction will be measured at each sampling event. The results of each monthly monitoring event will be submitted to the U.S. Environmental Protection Agency within 60 working days of sample collection. Specifications in the monitoring program are subject to modification.

NMFS intends to add the following conditions to any issuance of the EFP to ensure that there are no significant impacts on the environment or on our enforcement efforts regarding existing prohibitions on the taking of these species.

Proposed Conditions

1. Applicant must notify NMFS of any changes to the list of hatcheries to be used.

2. All fingerlings must be certified by the hatchery to be disease-free prior to placement in the cages.

3. Only chemotherapeutants approved by FDA or prescribed by a qualified veterinarian may be used.

4. Use of toxic chemicals as defined in 50 CFR 622.2 to control fouling of nets is prohibited.

5. Immediate notification must be provided to NMFS if any of the following events occur:

a. damage to cages or malfunction of supporting structures;

b. large-scale escapement, i.e., loss of more than 20 percent of a cage population;

c. Major disease outbreak resulting in mortalities exceeding 10 percent; or

d. entanglements of marine mammals or endangered or threatened sea turtles.

6. Quarterly reports are required beginning 90 days after anchoring cages in site on:

a. any disease occurrence;

b. any use of chemotherapeutants approved by FDA or prescribed by a qualified veterinarian;

c. outcome of any events requiring immediate notification (see 5 above);

d. changes in faunal composition of the area around the experimental site;

e. substrate and water quality monitoring;

f. harvests of maricultured fish species.

7. The following samples/records must be maintained a minimum of at least one year after the termination of the EFP and made available for inspection:

a. sources of feed including batch codes;

b. sources of each group of fish stocked including:

1. total number of fish by species;

2. estimated size of fish;

3. date of each introduction/stocking;

4. name, address and phone number of suppliers(s);

5. disease status of supplier's facility including, name, address, and phone number of analytical facilities assessing disease status;

6. samples of frozen specimens of each group of fish including fish harvested from cages, and during any unusual morbidity or mortality events as per USDA standards; and,

7. phase one fry will be satellite DNA documented by FFWCC geneticists at Port of Manatee Hatchery.

8. Fish must be maintained intact through offloading ashore. Fish will be placed in live haul containers located on the harvest vessels, brought to shore, and loaded on live haul trucks for sale to traditional live markets. Any fish over the capacity of the live market will be processed at Double D Seafood in St. Petersburg, FL and sold. Once harvested, the maricultured fish must be reported in accordance with state and Federal reporting requirements. Sale is allowed only to dealers licensed by Florida to sell maricultured fishery products landed in Florida.

9. Not less than 24 hours prior to harvest, provide the following information to the NMFS Law Enforcement Office, Southeast Region, St. Petersburg, FL, (727–570–5344): date, port, and facility at which maricultured product will be landed and name(s) and phone number(s) of licensed dealer(s) receiving the fish.

10. NMFS retains the authority to make periodic inspections of mariculture operations and records. If the applicant becomes a certified Florida aquaculturist, the applicant must notify NMFS Law Enforcement of the annual unique serial number required on all mariculture records, including sales, and the records must be made available for inspection by authorized officers and maintained for the duration of the EFP plus 1 year.

11. NMFS has the authority to suspend or revoke the EFP if: the application is found to contain false, incomplete, or inaccurate information; the applicant fails to comply with its terms and conditions; significant new information becomes available indicating that one of the conditions for denial of the EFP application applies (See 50 CFR 600.745(b)(8)). Revocation will require a General Counsel enforcement action per 600.745(b)(8) and 15 CFR 904 regulations.

12. Issuance of the EFP does not eliminate the need for the applicant to obtain any other Federal, state, or local authorizations required by law.

Based on a preliminary review, NMFS finds that this application warrants further consideration and is considering issuing an EFP. A final decision on issuance of the EFP will depend on a NMFS review of public comments received on the application, conclusions of environmental analyses conducted pursuant to the National Environmental Policy Act, and consultations with Florida, the Gulf of Mexico Fishery Management Council, the U.S. Coast Guard and the Environmental Protection Agency. The applicant requests a 24–month effective period for the EFP.

Authority: 16 U.S.C. 1801 *et seq.*

Dated: July 25, 2003.

Bruce C. Morehead,

Acting Director, Office of Sustainable Fisheries, National Marine Fisheries Service.

[FR Doc. 03–19376 Filed 7–29–03; 8:45 am]

BILLING CODE 3510–22–S

COMMITTEE FOR THE IMPLEMENTATION OF TEXTILE AGREEMENTS

Adjustment of Import Limits for Certain Cotton, Wool and Man-Made Fiber Textile Products Produced or Manufactured in Guatemala

July 25, 2003.

AGENCY: Committee for the Implementation of Textile Agreements (CITA).

ACTION: Issuing a directive to the Commissioner, Bureau of Customs and Border Protection adjusting limits.

EFFECTIVE DATE: July 30, 2003.

FOR FURTHER INFORMATION CONTACT: Naomi Freeman, International Trade Specialist, Office of Textiles and Apparel, U.S. Department of Commerce, (202) 482–4212. For information on the quota status of these limits, refer to the Quota Status Reports posted on the bulletin board of each Customs port, call (202) 927–5850, or refer to the Bureau of Customs and Border Protection website at http://www.customs.gov. For information on embargoes and quota re-openings, refer to the Office of Textiles and Apparel website at http://otexa.ita.doc.gov.

SUPPLEMENTARY INFORMATION:

Authority: Section 204 of the Agricultural Act of 1956, as amended (7 U.S.C. 1854); Executive Order 11651 of March 3, 1972, as amended.

The current limits for certain categories are being adjusted for swing and carryover.

A description of the textile and apparel categories in terms of HTS numbers is available in the CORRELATION: Textile and Apparel Categories with the Harmonized Tariff Schedule of the United States (see **Federal Register** notice 68 FR 1599, published on January 13, 2003). Also see 67 FR 68565, published on November 12, 2002.

James C. Leonard III,

Chairman, Committee for the Implementation of Textile Agreements.

Committee for the Implementation of Textile Agreements

July 25, 2003.

Commissioner,

Bureau of Customs and Border Protection, Washington, DC 20229.

Dear Commissioner: This directive amends, but does not cancel, the directive issued to you on November 1, 2002, by the Chairman, Committee for the Implementation of Textile Agreements. That directive concerns imports of certain cotton, wool and man-made fiber textile products, produced or manufactured in Guatemala and exported during the period which began on January 1, 2003 and extends through December 31, 2003.

Effective on July 30, 2003, you are directed to adjust the current limits for the following categories, as provided for under the Uruguay Round Agreement on Textiles and Clothing:

Category	Adjusted twelve-month limit [1]
340/640	2,364,567 dozen.
347/348	3,189,686 dozen.
351/651	528,595 dozen.
443	83,094 numbers.
448	54,010 dozen.

[1] The limits have not been adjusted to account for any imports exported after December 31, 2002.

The Committee for the Implementation of Textile Agreements has determined that these actions fall within the foreign affairs exception of the rulemaking provisions of 5 U.S.C. 553(a)(1).

Sincerely,

James C. Leonard III,

Chairman, Committee for the Implementation of Textile Agreements.

[FR Doc. 03–19423 Filed 7–29–03; 8:45 am]

BILLING CODE 3510–DR–S

COMMITTEE FOR THE IMPLEMENTATION OF TEXTILE AGREEMENTS

Increase of a Specific Limit for Certain Wool Textile Products Produced or Manufactured in Mexico

July 25, 2003.

AGENCY: Committee for the Implementation of Textile Agreements (CITA).

ACTION: Issuing a directive to the Commissioner, Bureau of Customs and Border Protection increasing a limit.

EFFECTIVE DATE: July 30, 2003.

FOR FURTHER INFORMATION CONTACT: Naomi Freeman, International Trade Specialist, Office of Textiles and Apparel, U.S. Department of Commerce, (202) 482–4212. For information on the quota status of this limit, refer to the Quota Status Reports posted on the bulletin boards of each Customs port, call (202) 927–5850, or refer to the Bureau of Customs and Border Protection website at http://www.customs.gov. For information on embargoes and quota re-openings, refer to the Office of Textiles and Apparel website at http://otexa.ita.doc.gov.

SUPPLEMENTARY INFORMATION:

Authority: Section 204 of the Agricultural Act of 1956, as amended (7 U.S.C. 1854); Executive Order 11651 of March 3, 1972, as amended.

The limit for Category 443 is being increased for swing and carryover.

The limit does not apply to NAFTA (North American Free Trade Agreement) originating goods, as defined in Annex 300–B, Chapter 4 and Annex 401 of the agreement. In addition, this limit does not apply to textile and apparel goods, assembled in Mexico, in which all fabric components were wholly formed and cut in the United States, entered under the United States Harmonized Tariff Schedule heading 9802.00.90.

A description of the textile and apparel categories in terms of HTS numbers is available in the CORRELATION: Textile and Apparel Categories with the Harmonized Tariff Schedule of the United States (see **Federal Register** notice 68 FR 1599, published on January 13, 2003). Also see 67 FR 57408, published on September 10, 2002.

James C. Leonard III,

Chairman, Committee for the Implementation of Textile Agreements.

The Committee for the Implementation of Textile Agreements

July 25, 2003.

Commissioner,

Bureau of Customs and Border Protection, Washington, DC 20229.

Dear Commissioner: This directive amends, but does not cancel, the directive issued to you on September 3, 2002 by the Chairman, Committee for the Implementation of Textile Agreements. That directive concerns imports of certain wool and man-made fiber textile products, produced or manufactured in Mexico and exported during the period which began on January 1, 2003 and extends through December 31, 2003. The levels established in that directive do not apply to NAFTA (North American Free Trade Agreement) originating goods, as defined in Annex 300–B, Chapter 4 and Annex 401 of NAFTA or to textile and apparel goods, assembled in Mexico, in which all fabric components were wholly formed and cut in the United States, entered under the United States Harmonized Tariff Schedule heading 9802.00.90.

Effective on July 30, 2003, you are directed to increase the current limit for Category 443 to 249,790 numbers [1], pursuant to the provisions of the NAFTA.

The Committee for the Implementation of Textile Agreements has determined that this action falls within the foreign affairs exception of the rulemaking provisions of 5 U.S.C. 553(a)(1).

[1] The limit has not been adjusted to account for any imports exported after December 31, 2002.

Sincerely,
James C. Leonard III,
Chairman, Committee for the Implementation of Textile Agreements.

[FR Doc. 03–19424 Filed 7–29–03; 8:45 am]

BILLING CODE 3510–DR–S

COMMITTEE FOR THE IMPLEMENTATION OF TEXTILE AGREEMENTS

Establishment of an Export Visa Arrangement for Certain Cotton, Wool and Man-Made Fiber Textiles and Textile Products Produced or Manufactured in Vietnam

July 24, 2003.

AGENCY: Committee for the Implementation of Textile Agreements (CITA)

ACTION: Issuing a directive to the Commissioner, Bureau of Customs and Border Protection establishing export visa requirements.

EFFECTIVE DATE: August 11, 2003.

FOR FURTHER INFORMATION CONTACT: Shikha Bhatnagar, International Trade Specialist, Office of Textiles and Apparel, U.S. Department of Commerce, (202) 482-3400.

SUPPLEMENTARY INFORMATION:

Authority: Section 204 of the Agricultural Act of 1956, as amended (7 U.S.C. 1854); Executive Order 11651 of March 3, 1972, as amended.

Pursuant to Annex C of the Bilateral Textile Agreement, dated July 17, 2003, the Governments of the United States and the Socialist Republic of Vietnam agreed to establish a new Export Visa Arrangement for certain cotton, wool and man-made fiber textiles and textile products subject to specific quota limits, as detailed in the notice and letter to the Commissioner, Bureau of Customs and Border Protection, published in the **Federal Register** on May 16, 2003 (see 68 FR 26575), produced or manufactured in Vietnam and exported from Vietnam on and after August 11, 2003.

A description of the textile and apparel categories in terms of HTS numbers is available in the CORRELATION: Textile and Apparel Categories with the Harmonized Tariff Schedule of the United States (see **Federal Register** notice 68 FR 1599, published on January 13, 2003).

Interested persons are advised to take all necessary steps to ensure that textile products that are entered into the United States for consumption, or withdrawn from warehouse for consumption, on and after August 11, 2003 will meet the visa requirements set forth in the letter published below to the Commissioner, Bureau of Customs and Border Protection.

James C. Leonard III,

Chairman, Committee for the Implementation of Textile Agreements.

Committee for the Implementation of Textile Agreements

July 24, 2003.

Commissioner,
Bureau of Customs and Border Protection, Washington, DC 20229.

Dear Commissioner: Pursuant to section 204 of the Agricultural Act of 1956, as amended (7 U.S.C. 1854); Executive Order 11651 of March 3, 1972, as amended; and the Export Visa Arrangement in Annex C of the Bilateral Textile Agreement, dated July 17, 2003, between the Governments of the United States and the Socialist Republic of Vietnam, you are directed to prohibit, effective on August 11, 2003, entry into the Customs territory of the United States (i.e., the 50 states, the District of Columbia and the Commonwealth of Puerto Rico) for consumption and withdrawal from warehouse for consumption of cotton, wool and man-made fiber textiles and textile products subject to specific quota limits, as detailed in the directive dated May 12, 2003, produced or manufactured in Vietnam and exported from Vietnam on and after August 11, 2003, for which the Government of Vietnam has not issued an appropriate export visa fully described below. Should additional categories, merged categories or part categories become subject to import quota, the additional, merged or part category(s) automatically shall be included in the coverage of this visa arrangement. Merchandise in the additional, merged or part category(s) exported on or after the date the category(s) becomes subject to import quotas shall require a visa.

A visa must accompany each commercial shipment of the aforementioned textile products, in the form of a circular stamped marking in blue ink appearing on the front of the original commercial invoice or successor document. The original visa shall not be stamped on duplicate copies of the invoice. The original invoice with the original visa stamp will be required to enter the shipment into the United States. Duplicates of the invoice and/or visa may not be used for this purpose.

Each visa stamp shall include the following information:

1. The visa number. The visa number shall be in the standard nine digit letter format, beginning with one numeric digit for the last digit of the year of export, followed by the two character alpha code specified by the International Organization for Standardization (ISO) for Vietnam (the code for the Vietnam is ''VN''), and a six digit numerical serial number identifying the shipment; e.g., 3VN123456.

2. The date of issuance. The date of issuance shall be the day, month and year on which the visa was issued.

3. The original signature and the printed name of the issuing official authorized by the Government of Vietnam.

4. The correct category(s), merged category(s), part category(s), quantity(s) and unit(s) of quantity of the shipment in the unit(s) of quantity provided for in the U.S. Department of Commerce Correlation and in the Harmonized Tariff Schedule of the United States (HTSUS), annotated, or successor documents shall be reported in the spaces provided within the visa stamp (e.g., ''Cat. 340-510 DOZ'').

Quantities must be stated in whole numbers. Decimals or fractions will not be accepted. Visaed quantities are rounded to the closest whole number if the quantity exported exceeds one whole unit, but is less than the next whole unit. Half units are rounded up. If the quantity visaed is less than one unit, the shipment is rounded upwards to one unit. Merged category quota merchandise may be accompanied by either the appropriate merged category visa or the correct category visa corresponding to the actual shipment. For example, quota Category 340/640 may be visaed as ''Category 340/640'' or if the shipment consists solely of Category 340 merchandise, the shipment may be visaed as ''Category 340'' but not as ''Category 640.''

The Bureau of Customs and Border Protection shall not permit entry if the shipment does not have a visa, or if the visa number, date of issuance, signature, category, quantity or units of quantity are missing, incorrect, illegible, or have been crossed out or altered in any way. If the quantity indicated on the visa is less than that of the shipment, entry shall not be permitted. If the quantity indicated on the visa is more than that of the shipment, entry shall be permitted and only the amount entered shall be charged to any applicable quota.

The complete name and address of the company(s) actually involved in the manufacturing process of the textile product covered by the visa shall be provided on the textile visa document.

If the visa is not acceptable then a new correct visa or a visa waiver must be presented to Customs before any portion of the shipment will be released. A visa waiver may be issued by the U.S. Department of Commerce at the request of the Government of the Socialist Republic of Vietnam through its Embassy in Washington, DC. The waiver, if used, only waives the requirement to present a visa with the shipment. It does not waive the quota requirements. Visa waivers will only be issued for classification purposes or for one-time special purpose shipments that are not part of an ongoing commercial enterprise.

If the visaed invoice is deficient, Customs will not return the original document after entry, but will provide a certified copy of that visaed invoice for use in obtaining a new correct original visaed invoice, or a visa waiver.

If a shipment from Vietnam has been allowed entry into the commerce of the United States with either an incorrect visa or no visa, and redelivery is requested but cannot be made, the shipment shall be charged to any applicable category limit whether or not a replacement visa or waiver is provided.

Other Provisions

The date of export is the actual date the merchandise leaves Vietnam. For merchandise exported by vessel or carrier, this is the date on which the merchandise leaves the last port in Vietnam.

Merchandise imported for the personal use of the importer and not for resale, regardless of value, and properly marked commercial sample shipments valued at U.S. $800 or less do not require an export visa for entry and shall not be charged to existing quota levels.

The Committee for the Implementation of Textile Agreements has determined that these actions fall within the foreign affairs exception to the rulemaking provisions of 5 U.S.C. 553(a)(1).

This letter will be published in the **Federal Register**.

Sincerely,

James C. Leonard III,

Chairman, Committee for the Implementation of Textile Agreements.

The Socialist Republic of Vietnam, Ministry of Trade

BILLING CODE 3510–DR–S

SPECIMEN VISA STAMP ISSUED BY VIETNAMESE AUTHORITIES

[FR Doc. 03–19422 Filed 7–29–03; 8:45 am]
BILLING CODE 3510–DR–C

DEPARTMENT OF DEFENSE

[OMB Control Number 0704–0369]

Information Collection Requirement; Defense Federal Acquisition Regulation Supplement; Rights in Technical Data and Computer Software

AGENCY: Department of Defense (DoD).

ACTION: Notice and request for comments regarding a proposed extension of an approved information collection requirement.

SUMMARY: In compliance with section 3506(c)(2)(A) of the Paperwork Reduction Act of 1995 (44 U.S.C. Chapter 35), DoD announces the proposed extension of a public information collection requirement and seeks public comment on the provisions thereof. DoD invites comments on: (a) Whether the proposed collection of information is necessary for the proper performance of the functions of DoD, including whether the information will have practical utility; (b) the accuracy of the estimate of the burden of the proposed information collection; (c) ways to enhance the quality, utility, and clarity of the information to be collected; and (d) ways to minimize the burden of the information collection on respondents, including the use of automated collection techniques or other forms of information technology. The Office of Management and Budget (OMB) has approved this information collection for use through November 30, 2003. DoD proposes that OMB extend its approval for use through November 30, 2006.

DATES: DoD will consider all comments received by September 29, 2003.

ADDRESSES: Respondents may submit comments directly on the World Wide Web at *http://emissary.acq.osd.mil/dar/dfars.nsf/pubcomm.* As an alternative, respondents may e-mail comments to: *dfars@acq.osd.mil.* Please cite OMB Control Number 0704–0369 in the subject line of e-mailed comments.

Respondents that cannot submit comments using either of the above methods may submit comments to: Defense Acquisition Regulations Council, Attn: Mr. Euclides Barrera, OUSD(AT&L)DPAP(DAR), IMD 3C132, 3062 Defense Pentagon, Washington, DC 20301–3062; facsimile (703) 602–0350. Please cite OMB Control Number 0704–0369.

At the end of the comment period, interested parties may view public comments on the World Wide Web at *http://emissary.acq.osd.mil/dar/dfars.nsf.*

FOR FURTHER INFORMATION CONTACT: Mr. Euclides Barrera, (703) 602–0296. The information collection requirements addressed in this notice are available electronically via the Internet at: *http://www.acq.osd.mil/dp/dars/dfars.html.* Paper copies are available from Mr. Euclides Barrera, OUSD(AT&L)DPAP(DAR), IMD 3C132, 3062 Defense Pentagon, Washington, DC 20301–3062.

SUPPLEMENTARY INFORMATION: *Title and OMB Number:* Defense Federal Acquisition Regulation Supplement (DFARS) Subpart 227.71, Rights in Technical Data, and Subpart 227.72, Rights in Computer Software and Computer Software Documentation, and related provisions and clauses of the Defense Federal Acquisition Regulation Supplement (DFARS); OMB Control Number 0704–0369.

Needs and Uses: DFARS Subparts 227.71 and 227.72 prescribe the use of solicitation provisions and contract clauses containing information collection requirements that are associated with rights in technical data and computer software. DoD needs this information to implement 10 U.S.C. 2320, Rights in technical data, and 10 U.S.C. 2321, Validation of proprietary data restrictions. DoD uses the information to recognize and protect contractor rights in technical data and computer software that are associated with privately funded developments; and to ensure that technical data delivered under a contract is complete and accurate and satisfies contract requirements.

Affected Public: Businesses or other for-profit and not-for-profit institutions.

Annual Burden Hours: 1,235,970.

Number of Respondents: 54,925.

Responses Per Respondent: 26.

Annual Responses: 1,403,170.

Average Burden Per Response: .9 hours.

Frequency: On occasion.

Summary of Information Collection

DoD uses the following DFARS provisions and clauses in solicitations and contracts to require offerors and contractors to identify and mark data or software requiring protection from unauthorized release or disclosure in accordance with 10 U.S.C. 2320:

252.227–7013, Rights in Technical Data'Noncommercial Items.

252.227–7014, Rights in Noncommercial Computer Software and Noncommercial Computer Software Documentation.

252.227–7017, Identification and Assertion of Use, Release, or Disclosure Restrictions.

252.227–7018, Rights in Noncommercial Technical Data and Computer Software—Small Business Innovation Research (SBIR) Program.

In accordance with 10 U.S.C. 2320(a)(2)(D), DoD may disclose limited rights data to persons outside the Government, or allow those persons to use limited rights data, if the recipient agrees not to further release, disclose, or use the data. Therefore, the clause at DFARS 252.227–7013, Rights in Technical Data—Noncommercial Items, requires the contractor to identify and mark data or software that it provides with limited rights.

In accordance with 10 U.S.C. 2321(b), contractors and subcontractors at any tier must be prepared to furnish written justification for any asserted restriction on the Government's rights to use or release data. The following DFARS clauses require contractors and subcontractors to maintain adequate records and procedures to justify any asserted restrictions:

252.227–7019, Validation of Asserted Restrictions—Computer Software.

252.227–7037, Validation of Restrictive Markings on Technical Data.

In accordance with 10 U.S.C. 2320, DoD must protect the rights of contractors that have developed items, components, or processes at private expense. Therefore, the clause at DFARS 252.227–7025, Limitations on the Use or Disclosure of Government-Furnished Information Marked with Restrictive Legends, requires a contractor or subcontractor to submit a use and non-disclosure agreement when it obtains data from the Government to which the Government has only limited rights.

The provision at DFARS 252.227–7028, Technical Data or Computer Software Previously Delivered to the Government, requires an offeror to identify any technical data or computer software that it previously delivered, or will deliver, under any Government contract. DoD needs this information to avoid paying for rights in technical data or computer software that the Government already owns.

In accordance with 10 U.S.C. 2320(b)(7), a contractor that delivers or makes technical data available to the Government must furnish written assurance that the technical data is complete and accurate and satisfies contract requirements. The clause at DFARS 252.227–7036, Declaration of

Technical Data Conformity, implements this requirement.

Michele P. Peterson,

Executive Editor, Defense Acquisition Regulations Council.

[FR Doc. 03–19404 Filed 7–29–03; 8:45 am]

BILLING CODE 5001–08–P

DEPARTMENT OF EDUCATION

RIN 1820–ZA24

National Institute on Disability and Rehabilitation Research (NIDRR)

AGENCY: Office of Special Education and Rehabilitative Services, Department of Education.

ACTION: Notice of final priority.

SUMMARY: The Assistant Secretary for Special Education and Rehabilitative Services announces a final priority for Collaborative Research Projects in Traumatic Brain Injury (TBI) under the Disability and Rehabilitation Research Projects (DRRP) Program under the National Institute on Disability and Rehabilitation Research (NIDRR) for fiscal year (FY) 2003 and later years. We take this action to focus research attention on areas of national need. We intend this priority to improve the rehabilitation services and outcomes for individuals with disabilities.

EFFECTIVE DATE: This priority is effective August 29, 2003.

FOR FURTHER INFORMATION CONTACT: Donna Nangle. Telephone: (202) 205–5880.

If you use a telecommunications device for the deaf (TDD), you may call the TDD number at (202) 205–4475 or via the Internet: *donna.nangle@ed.gov*

Individuals with disabilities may obtain this document in an alternative format (*e.g.*, Braille, large print, audiotape, or computer diskette) on request to the contact person listed under **FOR FURTHER INFORMATION CONTACT.**

SUPPLEMENTARY INFORMATION:

Disability and Rehabilitation Research Projects (DRRP) Program

The purpose of the DRRP Program is to plan and conduct research, demonstration projects, training, and related activities that help to maximize the full inclusion and integration of individuals with disabilities into society and to improve the effectiveness of services authorized under the Rehabilitation Act of 1973, as amended (the Act). An applicant for assistance under this program must demonstrate in its application how it will address, in whole or in part, the needs of individuals with disabilities from minority backgrounds (34 CFR 350.40(a)). The approaches an applicant may take to meet this requirement are found in 34 CFR 350.40(b).

General DRRP Requirements

- Involve, as appropriate, individuals with disabilities or their family members, or both, and persons who are members of groups that have traditionally been underrepresented in all aspects of the research as well as in design of clinical services and dissemination activities.
- Demonstrate knowledge of culturally appropriate methods of data collection, including understanding of culturally sensitive measurement approaches.
- Collaborate with other related projects, including the other funded Traumatic Brain Injury Model Systems (TBIMS) projects.

This priority supports the goals of President Bush's New Freedom Initiative (NFI) and is in concert with NIDRR's Long-Range Plan (the Plan). The NFI can be accessed on the Internet at: *http://www.whitehouse.gov/news/freedominitiative/freedominiative.html*

The Plan can be accessed on the Internet at: *http://www.ed.gov/offices/OSERS/NIDRR/Products.*

We published a notice of proposed priority for the Collaborative Research Projects in Traumatic Brain Injury (TBI) in the **Federal Register** on April 16, 2003 (68 FR 18601). No comments were received. There are no significant differences between the notice of proposed priority and this notice of final priority.

Note: This notice does not solicit applications. In any year in which we choose to use this priority, we invite applications through a notice in the **Federal Register**. A notice inviting applications for FY 2003 awards was published in the **Federal Register** on May 14, 2003 (68 FR 26171). When inviting applications we designate the priority as absolute, competitive preference, or invitational. The effect of each type of priority follows:

Absolute priority: Under an absolute priority, we consider only applications that meet the priority (34 CFR 75.105(c)(3)).

Competitive preference priority: Under a competitive preference priority, we give competitive preference to an application by either (1) Awarding additional points, depending on how well or the extent to which the application meets the priority (34 CFR 75.105(c)(2)(i)); or (2) selecting an application that meets the priority over an application of comparable merit that does not meet the priority (34 CFR 75.105(c)(2)(ii)).

Invitational priority: Under an invitational priority, we are particularly interested in applications that meet the invitational priority. However, we do not give an application that meets the priority a competitive or absolute preference over other applications (34 CFR 75.105(c)(1)).

Background

The background statement for the following priority was published in the notice of proposed priority on April 16, 2003 (68 FR 18601).

Priority

The Assistant Secretary intends to fund Traumatic Brain Injury collaborative research projects for the purpose of generating new knowledge through research to improve treatment and services delivery outcomes for persons with TBI. A collaborative research project must:

(1) Collaborate with three or more of the 16 NIDRR TBI Model Systems projects. The three can include the lead project plus additional projects;

(2) Conduct research on questions of significance to TBI rehabilitation, using clearly identified research designs such as randomized control trials, observational research methodologies, or longitudinal studies. The research must focus on areas identified in the NFI and the Plan, ensuring that each project has sufficient sample size and methodological rigor to generate robust findings. Areas of interest include health and function, technology for function, community integration and independent living, employment, and long-term outcomes.

(3) Disseminate research findings to clinical and consumer audiences, using accessible formats.

(4) Evaluate impact of research findings on improved outcomes for persons with TBI.

Selection Criterion

The emphasis on research rigor plus the importance of the collaborative research program require a modification to the selection criteria for this program. The Secretary will add a criterion to reflect increased emphasis on research management. This criterion reads as follows: There must be a clearly delineated plan for research management, with focus on quality controls for data collection, management of research protocols, and provisions for oversight at collaborating sites.

Executive Order 12866

This notice of final priority has been reviewed in accordance with Executive Order 12866. Under the terms of the order, we have assessed the potential costs and benefits of this regulatory action.

The potential costs associated with the notice of final priority are those resulting from statutory requirements and those we have determined as necessary for administering this program effectively and efficiently.

In assessing the potential costs and benefits—both quantitative and qualitative—of this notice of final priority, we have determined that the benefits of the priority justify the costs.

Summary of Potential Posts and Benefits

The potential cost associated with this priority is minimal while the benefits are significant. Grantees may anticipate costs associated with completing the application process in terms of staff time, copying, and mailing or delivery. The use of e-Application technology reduces mailing and copying costs significantly.

The benefits of the TBIMS and collaborative projects have been well established over the years that similar projects have been completed. This priority will generate new knowledge through research to improve treatment and services delivery outcomes for persons with TBI through collaborative research projects.

The benefit of this priority and application project requirements will be the establishment of new collaborative projects that generate, disseminate, and promote the use of new information that will improve the options for disabled individuals to perform regular activities in the community.

Applicable Program Regulations: 34 CFR part 350.

Electronic Access to This Document

You may view this document, as well as all other Department of Education documents published in the **Federal Register**, in text or Adobe Portable Document Format (PDF) on the Internet at the following site: *http://www.ed.gov/legislation/FedRegister.*

To use PDF you must have Adobe Acrobat Reader, which is available free at this site. If you have questions about using PDF, call the U.S. Government Printing Office (GPO), toll free, at 1–888–293–6498; or in the Washington, DC, area at (202) 512–1530.

Note: The official version of this document is published in the **Federal Register**. Free Internet access to the official edition of the **Federal Register** and the Code of Federal Regulations is available on GPO Access at: *http://www.access.gpo.gov/nara/index.html.*

(Catalog of Federal Domestic Assistance Number 84.133A, Disability Rehabilitation Research Project.)

Program Authority: 29 U.S.C. 762(g) and 764(b).

Dated: July 25, 2003.

Loretta Petty Chittum,

Acting Assistant Secretary for Special Education and Rehabilitative Services.

[FR Doc. 03–19336 Filed 7–29–03; 8:45 am]

BILLING CODE 4000–01–P

DEPARTMENT OF EDUCATION

Office of Special Education and Rehabilitative Services

[CFDA No.: 84.326N]

Special Education—Technical Assistance and Dissemination To Improve Services and Results for Children With Disabilities—National Dissemination Center for Individuals With Disabilities (84.326N)

ACTION: Notice inviting applications for new awards for fiscal year (FY) 2003.

SUMMARY: The Assistant Secretary for Special Education and Rehabilitative Services invites applications for FY 2003 under the Special Education—Technical Assistance and Dissemination to Improve Services and Results for Children with Disabilities Program. This program is authorized under the Individuals with Disabilities Education Act (IDEA), as amended. This notice provides closing dates, priorities, and other information regarding the transmittal of applications.

Purpose of Program: This program provides technical assistance and information that (1) support States and local entities in building capacity to improve early intervention, educational, and transitional services and results for children with disabilities and their families; and (2) address goals and priorities for changing State systems that provide early intervention, educational, and transitional services for children with disabilities and their families.

Eligible Applicants: State educational agencies, local educational agencies, institutions of higher education, other public agencies, nonprofit private organizations, for-profit organizations, outlying areas, freely associated States, and Indian tribes or Tribal organizations.

Applications Available: July 30, 2003.

Deadline for Transmittal of Applications: August 29, 2003.

Deadline for Intergovernmental Review: September 29, 2003.

Estimated Available Funds: $1.6 million.

Maximum Awards: $1.6 million.

Note: in years 2–5 of the project period for the National Dissemination Center for Individuals with Disabilities grant, the maximum award amount is $1,900,000.

Note: The Department is not bound by any estimates in this notice.

Project Period: Up to 60 months.

Page Limit: (Part III of the application) is where you, the applicant, address the selection criteria that reviewers use to evaluate your application. You must limit Part III to the equivalent of no more than 70 pages, using the following standards:

- A ''page'' is 8.5″ x 11″, on one side only with 1″ margins at the top, bottom, and both sides.
- Double space (no more than three lines per vertical inch) all text in the application narrative, including titles, headings, footnotes, quotations, and captions, as well as all text in charts, tables, figures, and graphs.
- Use a font that is either 12-point or larger or no smaller than 10 pitch (characters per inch).

The page limit does not apply to Part I, the cover sheet; Part II, the budget section, including the narrative budget justification; Part IV, the assurances and certifications; or the one-page abstract, the resumes, the bibliography, references, or the letters of support. However, you must include all of the application narrative in Part III. We will reject your application if—

- You apply these standards and exceed the page limit; or
- You apply other standards and exceed the equivalent of the page limit.

Applicable Regulations: The Education Department General Administrative Regulations (EDGAR) in 34 CFR parts 74, 75, 77, 79, 80, 81, 82, 85, 86, 97, 98, and 99.

Note: The regulations in 34 CFR part 79 apply to all applicants except federally recognized Indian tribes.

Note: The regulations in 34 CFR part 86 apply to institutions of higher education only.

Selection Criteria: In evaluating an application for a new grant under this competition, we will use selection criteria chosen from the general selection criteria in 34 CFR 75.210 of EDGAR. The specific selection criteria to be used for this competition will be provided in the application package for this competition.

General Requirements

(a) The projects funded under this competition must make positive efforts to employ and advance in employment qualified individuals with disabilities (see section 606 of IDEA).

(b) Applicants and grant recipients under this competition must involve qualified individuals with disabilities or parents of individuals with disabilities in planning, implementing, and evaluating the projects (see section 661(f)(1)(A) of IDEA).

(c) If a project maintains a Web site, it must include relevant information and documents in an accessible form on the Web site.

Priority

Under 34 CFR 75.105(c)(3), we consider only applications that meet the following absolute priority:

Background

Since the early 1980s, the Office of Special Education Programs (OSEP) has funded a national clearinghouse to provide individuals and organizations throughout the Nation with information, referral, and technical assistance regarding children with disabilities and disability-related issues. Disseminating information is intended to support States and local entities in building capacity to improve early intervention, educational, and transitional services, and results for children with disabilities and their families, and to address systemic-change goals and priorities. As additional parents and professionals address issues related to the Individuals with Disabilities Education Act, as amended (IDEA), and the No Child Left Behind Act of 2001 (NCLB), the need for information will intensify and existing materials will have to be updated, revised, and improved upon.

Given the prominence and complexity of technology within our current information age and the increased demand for timely and accurate information, a central repository of information is critical to the success of a national dissemination effort. This priority will support a national center to serve as a central repository of products developed by OSEP-funded technical assistance and dissemination (TA & D) projects. The chief aim of the center, however, would be to disseminate information about IDEA and NCLB to all interested parties.

Priority

This priority will support a cooperative agreement for a national dissemination center that will (1) serve as a repository for products developed by OSEP's TA & D network, (2) maintain a database of products developed by OSEP's TA & D network, as well as scientifically-based products not developed by the TA & D network, and 3) disseminate products. This Center must be named the National Dissemination Center for Children with Disabilities.

The Center must—

(a) Conduct a semi-annual survey of all OSEP-funded TA & D centers to determine the current status of products developed and in development. The Center must report its findings to the Federal project officer.

(b) Collect and disseminate information on the programs and services affecting infants, toddlers, and children with disabilities under IDEA, NCLB, and other Federal education laws.

(c) Collect information related to research on the provision of special education and early intervention services and disseminate that information to teachers and related services professionals, early intervention personnel, teacher trainers, administrators, policy makers, and researchers through a variety of publications and conferences.

(d) Participate in programs and activities to collect and disseminate information on issues related to children with disabilities and promote networking among appropriate national, State, and local agencies and organizations that deal with issues under IDEA. The Center must coordinate its activities with Parent Training and Information Centers, Community Parent Resource Centers, the National and Regional Parent Technical Assistance Centers projects, Regional Resource Centers, and other centers supported under Part D, including research institutes and training centers, age-specific technical assistance centers, and content-specific technical assistance centers. Evidence of collaboration and proposed outcomes of the collaboration must be reported to the Federal project officer.

(e) Develop informational exchanges among the Center and other OSEP TA & D centers, and other federally-supported TA & D centers as appropriate.

(f) In addition to the above networking activities, collaborate and communicate with other OSEP-funded projects such as the State Improvement grantees, General Supervision Enhancement grantees, and the National Center for Special Education Accountability Monitoring. Evidence of collaboration and proposed outcomes of the collaboration must be reported to the Federal project officer.

(g) Establish a coordinated network and conduct outreach activities with relevant Federal, State, and local organizations aimed at disseminating relevant information on research, programs, and services.

(h) Maintain a database of all products developed by OSEP's TA & D network and other related products as appropriate. This database must include information on practices, including interventions, techniques, programs, and models. This information must be in a standard format that includes, at a minimum, the following:

(1) The specific practice and the intended audience.

(2) The extent to which clear guidelines for successful implementation of the practice are available.

(3) The extent to which the practice includes:

(i) Appropriate training for all implementers;

(ii) Systemic implementation utilizing appropriate organizational structures and processes; and

(iii) High expectations and effective assessment of student progress.

(4) Where interested individuals can see the practice in operation, producing the intended level of results.

(5) The cost to implement the practice.

(i) Develop and implement strategies to disseminate information to underrepresented groups such as those with limited English proficiency.

(j) Create and maintain a Web site that (1) links electronically to all OSEP-funded TA & D project Web sites, (2) contains a database of all OSEP-funded TA & D products, (3) contains a searchable database that includes all active OSEP discretionary projects, (4) keeps information and documents in an accessible form, and (5) is available in both English and Spanish.

The Center's product development activities must include but are not limited to the following:

(a) Developing products on IDEA legislation and NCLB as it relates to students with disabilities, as requested and approved by OSEP.

(b) Establishing a mechanism for synthesizing and disseminating research information to all interested parties. For topics that the What Works Clearinghouse does not plan to address the Center will use the What Works Clearinghouse protocols to carry out synthesis work. This process must include the involvement of researchers who will assist the Center in the synthesis of research. Topics must be approved by OSEP prior to synthesis. This activity must include but is not

limited to publishing semi-annually the Research Connections in Special Education, an 8-page brief that synthesizes research results into user-friendly information for practitioners.

(c) Preparing the OSEP Digest and issuing briefs and other products designed to summarize recent research on critical issues for practitioners and other interested parties. These briefs and other reports, to the extent possible, must (1) build on an existing database of analyses of research studies (that over time will be submitted in a standard format for group designs) so that new reports will build on previous reports and (2) be available on the Web.

(e) Preparing the annual directories of OSEP-funded projects by compiling information about all OSEP-funded discretionary grants. This information must include an abstract of each grant, administrative information about the grant such as the grantee, name of project, name of project director, beginning and ending dates of grant, name of OSEP project officer, and other information as requested by OSEP. An electronic database that contains all of the information found in the directories must be maintained.

The Center must also:

(a) Maintain communication with the Federal project officer through monthly phone conversations and e-mail communication as needed. The Center must submit annual performance reports and provide additional written materials as needed for the Federal project officer to monitor the Center's work.

(b) Establish a document review board whose membership must be approved by OSEP. All OSEP TA & D projects will be required to submit proposals for new paper or electronic products to the review board prior to their development. The board must review these proposals in a timely fashion and approve for development all proposed products that are deemed necessary to meet existing information needs. The board must also identify information needs for which no product is available, and solicit proposals from OSEP's TA & D network for new products to meet these needs.

(c) Establish, maintain, and meet at least annually with an advisory committee consisting of persons with expertise in information dissemination, individuals with disabilities, parents, educators, service providers, researchers, and others as appropriate to review and provide advice on the Center's activities and plans. The members of this committee must be approved by OSEP.

(d) Evaluate the impact of the Center's activities relative to its users, the dissemination needs of its users, and the proposed outcomes of the dissemination. The Center must report its evaluation findings annually to the Federal project officer.

(e) In addition to the 2-day Project Directors' meeting listed in the General Requirements section of this notice, budget for an additional 2-day project meeting annually to attend the Research Project Directors' meeting and for at least eight 2-day trips annually as requested by OSEP to attend events such as Department briefings, Department-sponsored conferences, and other events needed to fulfill public awareness objectives.

Fourth and Fifth Years of Project

In deciding whether to continue this project for the fourth and fifth years, the Secretary will consider the requirements of 34 CFR 75.253(a), and in addition—

(a) The recommendation of a review team consisting of experts selected by the Secretary which review will be conducted in Washington, DC, during the last half of the project's second year. Projects must budget for the travel associated with this one-day intensive review;

(b) The timeliness and effectiveness with which all requirements of the negotiated cooperative agreement have been or are being met by the Center; and

(c) Evidence of the degree to which the Center's activities have contributed to changed practices and improved student outcomes.

Waiver of Proposed Rulemaking

It is generally our practice to offer interested parties the opportunity to comment on proposed priorities. However, section 661(e)(2) of IDEA makes the public comment requirements in the Administrative Procedure Act (5 U.S.C. 553) inapplicable to the priority in this notice.

Application Procedures

Note: Some of the procedures in these instructions for transmitting applications differ from those in the Education Department General Administrative Regulations (EDGAR) (34 CFR 75.102). Under the Administrative Procedure Act (5 U.S.C. 553) the Department generally offers interested parties the opportunity to comment on proposed regulations. However, these amendments make procedural changes only and do not establish new substantive policy. Therefore, under 5 U.S.C. 553(b)(A), the Secretary has determined that proposed rulemaking is not required.

Pilot Project for Electronic Submission of Applications

In Fiscal Year 2003, the U.S. Department of Education is continuing to expand its pilot project for electronic submission of applications to include additional formula grant programs and additional discretionary grant competitions. Special Education—Technical Assistance and Dissemination to Improve Services and Results for Children with Disabilities Program—CFDA #84.326N is one of the programs included in the pilot project. If you are an applicant under the Special Education—Technical Assistance and Dissemination to Improve Services and Results for Children with Disabilities Program, you may submit your application to us in either electronic or paper format.

The pilot project involves the use of the Electronic Grant Application System (e-Application). Users of e-Application will be entering data on-line while completing their applications. You may not e-mail a soft copy of a grant application to us. If you participate in this voluntary pilot project by submitting an application electronically, the data you enter on-line will be saved into a database. We request your participation in e-Application. We shall continue to evaluate its success and solicit suggestions for improvement.

If you participate in e-Application, please note the following:

- Your participation is voluntary.
- You will not receive any additional point value because you submit a grant application in electronic format, nor will we penalize you if you submit an application in paper format. When you enter the e-Application system, you will find information about its hours of operation.
- You may submit all documents electronically, including the Application for Federal Education Assistance (ED 424), Budget Information—Non-Construction Programs (ED 524), and all necessary assurances and certifications.
- After you electronically submit your application, you will receive an automatic acknowledgement, which will include a PR/Award number (an identifying number unique to your application).
- Within three working days after submitting your electronic application, fax a signed copy of the Application for Federal Education Assistance (ED 424) to the Application Control Center after following these steps:

1. Print ED 424 from e-Application.
2. The institution's Authorizing Representative must sign this form.

3. Place the PR/Award number in the upper right hand corner of the hard copy signature page of the ED 424.

4. Fax the signed ED 424 to the Application Control Center at (202) 260–1349.

• We may request that you give us original signatures on all other forms at a later date.

• *Closing Date Extension in Case of System Unavailability:* If you elect to participate in the e-Application pilot for the Special Education'Technical Assistance and Dissemination to Improve Services and Results for Children with Disabilities Program and you are prevented from submitting your application on the closing date because the e-Application system is unavailable, we will grant you an extension of one business day in order to transmit your application electronically, by mail, or by hand delivery. For us to grant this extension—

1. You must be a registered user of e-Application, and have initiated an e-Application for this competition; and

2. (a) The e-Application system must be unavailable for 60 minutes or more between the hours of 8:30 a.m. and 3:30 p.m., Washington, DC, time, on the deadline date; or

(b) The e-Application system must be unavailable for any period of time during the last hour of operation (that is, for any period of time between 3:30 p.m. and 4:30 p.m., Washington, DC, time) on the deadline date.

The Department must acknowledge and confirm these periods of unavailability before granting you an extension. To request this extension you must contact either (1) the person listed elsewhere in this notice under **FOR FURTHER INFORMATION CONTACT** or (2) the e-GRANTS help desk at 1–888–336–8930.

You may access the electronic grant application for the Special Education—Technical Assistance and Dissemination to Improve Services and Results for Children with Disabilities Program at *http://e-grants.ed.gov*.

We have included additional information about the e-Application pilot project (see Parity Guidelines between Paper and Electronic Applications) in the application package.

For Applications Contact: Education Publications Center (ED Pubs), P.O. Box 1398, Jessup, Maryland 20794–1398. Telephone (toll free): 1–877–433–7827. FAX: 301–470–1244. If you use a telecommunications device for the deaf (TDD), you may call (toll free): 1–877–576–7734.

You may also contact ED Pubs at its Web site: *http://www.ed.gov/pubs/edpubs.html*.

Or you may contact ED Pubs at its e-mail address: *edpubs@inet.ed.gov*.

If you request an application from ED Pubs, be sure to identify this competition as follows: CFDA 84.326N.

FOR FURTHER INFORMATION CONTACT: The Grants and Contracts Services Team, U.S. Department of Education, 400 Maryland Avenue, SW., room 3317, Switzer Building, Washington, DC 20202–2550. Telephone: 1–202–205–8207.

If you use a telecommunications device for the deaf (TDD), you may call the Federal Information Relay Service (FIRS) at 1–800–877–8339.

Individuals with disabilities may obtain this document or a copy of the application package in an alternative format (*e.g.*, Braille, large print, audiotape, or computer diskette) on request to the Grants and Contracts Services Team listed in this section. However, the Department is not able to reproduce in an alternative format the standard forms included in the application package.

Intergovernmental Review

The program in this notice is subject to the requirements of Executive Order 12372 and the regulations in 34 CFR part 79. One of the objectives of the Executive order is to foster an intergovernmental partnership and a strengthened federalism. The Executive order relies on processes developed by State and local governments for coordination and review of proposed Federal financial assistance.

This document provides early notification of our specific plans and actions for this program.

Electronic Access to This Document

You may view this document, as well as all other Department of Education documents published in the **Federal Register**, in text or Adobe Portable Document Format (PDF) on the internet at the following site: *www.ed.gov/legislation/FedRegister*.

To use PDF you must have Adobe Acrobat Reader, which is available free at this site. If you have questions about using PDF, call the U.S. Government Printing Office (GPO), toll free, at 1–888–293–6498; or in the Washington, DC, area at (202) 512–1530.

Note: The official version of this document is the document published in the **Federal Register**. Free Internet access to the official edition of the **Federal Register** and the Code of Federal Regulations is available on GPO Access at *http://www.access.gpo/nara/index.html*.

Program Authority: 20 U.S.C. 1485.

Dated: July 25, 2003.

Robert H. Pasternack,

Assistant Secretary for Special Education and Rehabilitative Services.

[FR Doc. 03–19337 Filed 7–29–03; 8:45 am]

BILLING CODE 4000–01–P

DEPARTMENT OF ENERGY

Office of Science; DOE/Advanced Scientific Computing Advisory Committee

AGENCY: Department of Energy.

ACTION: Notice of open meeting.

SUMMARY: This notice announces a meeting of the Advanced Scientific Computing Advisory Committee (ASCAC). Federal Advisory Committee Act (Pub. L. 92–463, 86 Stat. 770) requires that public notice of these meetings be announced in the **Federal Register**.

DATES: Thursday, August 21, 2003, 8:30 a.m. to 5:30 p.m.; Friday, August 22, 2003, 8:30 a.m. to 1 p.m.

ADDRESSES: Hamilton Crowne Plaza Hotel, 14th and K Streets NW., Washington, DC.

FOR FURTHER INFORMATION CONTACT: Melea Baker, Office of Advanced Scientific Computing Research, SC–30/Germantown Building, Department of Energy, 1000 Independence Avenue, SW., Washington, DC 20585–1290; telephone (301)–903–7486, e-mail: *Melea.Baker@science.doe.gov*.

SUPPLEMENTARY INFORMATION: *Purpose of the Meeting:* The purpose of this meeting is to provide advice and guidance with respect to the advanced scientific computing research program.

Tentative Agenda: Agenda will include discussions of the following:

Thursday, August 21, 2003

Introduction
Remarks from the Director, Office of Science
Advanced Scientific Computing Research Update
Briefing on Major Facility by Oak Ridge National Laboratory
Science Case for Large-scale Simulation Workshop Presentation
Long Term Performance Measures Discussion
ASCR Strategic Plan Update
Public Comment

Friday, August 22, 2003

High End Computing Research Task Force Update
Briefing on DOE Cyber Security
New Business

Advisory Committee Open Discussion of Issues
Public Comment

Public Participation: The meeting is open to the public. If you would like to file a written statement with the Committee, you may do so either before or after the meeting. If you would like to make oral statements regarding any of the items on the agenda, you should contact Melea Baker via FAX at 301–903–4846 or via e-mail (*Melea.Baker@science.doe.gov*). You must make your request for an oral statement at least 5 business days prior to the meeting. Reasonable provision will be made to include the scheduled oral statements on the agenda. The Chairperson of the Committee will conduct the meeting to facilitate the orderly conduct of business. Public comment will follow the 10-minute rule.

Minutes: The minutes of this meeting will be available for public review and copying within 30 days at the Freedom of Information Public Reading Room, 1E–190, Forrestal Building, 1000 Independence Avenue, SW., Washington, DC 20585; between 9 a.m. and 4 p.m., Monday through Friday, except holidays.

Issued in Washington, DC, on July 24, 2003.

Rachel M. Samuel,

Deputy Advisory Committee Management Officer.

[FR Doc. 03–19342 Filed 7–29–03; 8:45 am]

BILLING CODE 6450–01–P

DEPARTMENT OF ENERGY

Environmental Management Site-Specific Advisory Board, Paducah

AGENCY: Department of Energy (DOE).

ACTION: Notice of open meeting.

SUMMARY: This notice announces a meeting of the Environmental Management Site-Specific Advisory Board (EM SSAB), Paducah. The Federal Advisory Committee Act (Pub. L. 92–463, 86 Stat. 770) requires that public notice of these meetings be announced in the **Federal Register**.

DATES: Thursday, August 21, 2003; 5:30 p.m.–9:30 p.m.

ADDRESSES: 111 Memorial Drive, Barkley Centre, Paducah, Kentucky.

FOR FURTHER INFORMATION CONTACT: W. Don Seaborg, Deputy Designated Federal Officer, Department of Energy Paducah Site Office, Post Office Box 1410, MS–103, Paducah, Kentucky 42001; (270) 441–6806.

SUPPLEMENTARY INFORMATION: *Purpose of the Board:* The purpose of the Board is to make recommendations to DOE and its regulators in the areas of environmental restoration and waste management activities.

Tentative Agenda:

5:30 p.m.—Informal Discussion
6 p.m.—Call to Order; Introductions; Approve July Minutes; Review Agenda
6:10 p.m.—DDFO's Comments
- ES & H issues
- Budget Update
- EM Project Updates
- CAB Recommendation Status
- Cleanup Scope Update
- Other

6:30 p.m.—Federal Coordinator Comments
6:40 p.m.—Ex-officio Comments
6:50 p.m.—Public Comments and Questions
7 p.m.—Administrative Issues
- Review of Workplan
- Review Next Agenda
- August 22 Dinner Meeting

7:20 p.m.—Review of Action Items
7:35 p.m.—Break
7:45 p.m.—Presentation
- Conflict of Interest
- Kentucky Pollutant Discharge Elimination System (KPDES) Permit Update

8:30 p.m.—Public Comments and Questions
8:55 p.m.—Task Force and Subcommittee Reports
- Water Task Force
- Waste Operations Task Force
- Long Range Strategy/Stewardship
- Community Concerns
- Public Involvement/Membership
- Ad Hoc for Chairs' Meeting

9:25 p.m.—Final Comments
9:30 p.m.—Adjourn

Copies of the final agenda will be available at the meeting.

Public Participation: The meeting is open to the public. Written statements may be filed with the Committee either before or after the meeting. Individuals who wish to make oral statements pertaining to agenda items should contact David Dollins at the address listed above or by telephone at (270) 441–6819. Requests must be received five days prior to the meeting and reasonable provision will be made to include the presentation in the agenda. The Deputy Designated Federal Officer is empowered to conduct the meeting in a fashion that will facilitate the orderly conduct of business. Each individual wishing to make public comments will be provided a maximum of five minutes to present their comments as the first item of the meeting agenda.

Minutes: The minutes of this meeting will be available for public review and copying at the Freedom of Information Public Reading Room, 1E–190, Forrestal Building, 1000 Independence Avenue, SW., Washington, DC 20585; between 9 a.m. and 4 p.m., Monday–Friday, except Federal holidays. Minutes will also be available at the Department of Energy's Environmental Information Center and Reading Room at 115 Memorial Drive, Barkley Centre, Paducah, Kentucky; between 8 a.m. and 5 p.m. on Monday thru Friday or by writing to David Dollins, Department of Energy Paducah Site Office, Post Office Box 1410, MS–103, Paducah, Kentucky 42001; or by calling him at (270) 441–6819.

Issued at Washington, DC, on July 24, 2003.

Rachel M. Samuel,

Deputy Advisory Committee Management Officer.

[FR Doc. 03–19341 Filed 7–29–03; 8:45 am]

BILLING CODE 6450–01–P

DEPARTMENT OF ENERGY

Energy Information Administration

Agency information collection activities: Proposed collection; Comment Request

AGENCY: Energy Information Administration (EIA), Department of Energy (DOE).

ACTION: Agency information collection activities: proposed collection; comment request.

SUMMARY: The EIA is soliciting comments on the proposed three-year extension to the Form FE–781R, ''Annual Report of International Electrical Export/Import Data.''

DATES: Comments must be filed by September 29, 2003. If you anticipate difficulty in submitting comments within that period, contact the person listed below as soon as possible.

ADDRESSES: Send comments to Steven Mintz. To ensure receipt of the comments by the due date, submission by FAX (202–586–9506) or e-mail *steven.mintz@hq.doe.gov* is recommended. The mailing address is Office of Coal and Power Imports and Exports, FE–27, Forrestal Building, U.S. Department of Energy, Washington, DC 20585. Alternatively, Mr. Mintz may be contacted by telephone at 202–586–6050.

FOR FURTHER INFORMATION CONTACT: Requests for additional information or copies of any forms and instructions should be directed to Mr. Mintz at the address listed above.

SUPPLEMENTARY INFORMATION:

I. Background
II. Current Actions
III. Request for Comments

I. Background

The Federal Energy Administration Act of 1974 (Pub. L. 93–275, 15 U.S.C. 761 et seq.) and the DOE Organization Act (Pub. L. 95–91, 42 U.S.C. 7101 *et seq.*) requires the EIA to carry out a centralized, comprehensive, and unified energy information program. This program collects, evaluates, assembles, analyzes, and disseminates information on energy resource reserves, production, demand, technology, and related economic and statistical information. This information is used to assess the adequacy of energy resources to meet near and longer-term domestic demands.

The EIA, as part of its effort to comply with the Paperwork Reduction Act of 1995 (Pub. L. 104–13, 44 U.S.C. Chapter 35), provides the general public and other Federal agencies with opportunities to comment on collections of energy information conducted by or in conjunction with the EIA. Any comments received help the EIA to prepare data requests that maximize the utility of the information collected, and to assess the impact of collection requirements on the public. Also, the EIA will later seek approval by the Office of Management and Budget (OMB) under Section 3507(a) of the Paperwork Reduction Act of 1995.

The Office of Coal and Power Imports and Exports (Fossil Energy) will monitor the levels of electricity imports and exports and issue summary tabulations in a staff Annual Report. This information will be kept in the public docket files and will be available for public inspection and copying. The Office will also provide monthly tabulations of these data for use by the Energy Information Administration.

II. Current Actions

A clearance package will be submitted to the Office of Management and Budget requesting approval of a three-year extension with no change of the currently-approved collection.

III. Request for Comments

Prospective respondents and other interested parties should comment on the actions discussed in item II. The following guidelines are provided to assist in the preparation of comments.

General Issues

A. Is the proposed collection of information necessary for the proper performance of the functions of the agency and does the information have practical utility? Practical utility is defined as the actual usefulness of information to or for an agency, taking into account its accuracy, adequacy, reliability, timeliness, and the agency's ability to process the information it collects.

B. What enhancements can be made to the quality, utility, and clarity of the information to be collected?

As a Potential Respondent to the Request for Information

A. What actions could be taken to help ensure and maximize the quality, objectivity, utility, and integrity of the information to be collected?

B. Are the instructions and definitions clear and sufficient? If not, which instructions need clarification?

C. Can the information be submitted by the due date?

D. Public reporting burden for this collection is estimated to average 10 hours per response for those reporting annually, and 2.5 hours per response for those reporting quarterly. The estimated burden includes the total time necessary to provide the requested information. In your opinion, how accurate is this estimate?

E. The agency estimates that the only cost to a respondent is for the time it will take to complete the collection. Will a respondent incur any start-up costs for reporting, or any recurring annual costs for operation, maintenance, and purchase of services associated with the information collection?

F. What additional actions could be taken to minimize the burden of this collection of information? Such actions may involve the use of automated, electronic, mechanical, or other technological collection techniques or other forms of information technology.

G. Does any other Federal, State, or local agency collect similar information? If so, specify the agency, the data element(s), and the methods of collection.

As a Potential User of the Information To Be Collected

A. What actions could be taken to help ensure and maximize the quality, objectivity, utility, and integrity of the information disseminated?

B. Is the information useful at the levels of detail to be collected?

C. For what purpose(s) would the information be used? Be specific.

D. Are there alternate sources for the information and are they useful? If so, what are their weaknesses and/or strengths?

Comments submitted in response to this notice will be summarized and/or included in the request for OMB approval of the form. They also will become a matter of public record.

Statutory Authority: Section 3507(h)(1) of the Paperwork Reduction Act of 1995 (Pub. L. No. 104–13, 44 U.S.C. Chapter 35).

Issued in Washington, DC, July 24, 2003.

Jay H. Casselberry,

Agency Clearance Officer, Statistics and Methods Group, Energy Information Administration.

[FR Doc. 03–19343 Filed 7–29–03; 8:45 am]

BILLING CODE 6450–01–P

ENVIRONMENTAL PROTECTION AGENCY

[FRL–7536–6]

Science Advisory Board Staff Office; Request for Nominations for Additional Expertise for the Consultation on EPA's Strategy on Suspended and Bedded Sediments

AGENCY: Environmental Protection Agency (EPA).

ACTION: Notice.

SUMMARY: The EPA Science Advisory Board (SAB) Staff Office is requesting nominations to add additional expertise to the SAB Ecological Processes and Effects Committee for a panel to provide a consultation to EPA on Suspended and Bedded Sediments (SABS).

DATES: Nominations should be submitted by August 20, 2003.

ADDRESSES: Nominations should be submitted in electronic format through the Form for Nominating Individuals to Panels of the EPA Science Advisory Board provided on the SAB Web site, *www.epa.gov/sab*. To be considered, all nominations must include the information required on that form. Anyone who is unable to submit nominations via this form may contact Dr. L. Joseph Bachman, Designated Federal Officer as indicated below.

FOR FURTHER INFORMATION CONTACT: Any member of the public wishing further information regarding this Request for Nomination may contact Dr. L. Joseph Bachman, Designated Federal Officer (DFO), via telephone/voice mail at (202) 564–3968; via e-mail at *bachman.joseph@epa.gov*; or at U.S. EPA Science Advisory Board (1400A), 1200 Pennsylvania Ave NW., Washington DC 20460. General information about the SAB can be found in the SAB web site at *http://www.epa.gov/sab*.

SUPPLEMENTARY INFORMATION: *Summary:* The U.S. Environmental Protection Agency (EPA) Science Advisory Board

Staff Office is requesting nominations to add expertise to the Science Advisory Board's Ecological Processes and Effects Committee to form a Panel on Suspended and Bedded Sediments (SABS). The EPA Office of Water is preparing a strategy for developing water quality criteria guidance for SABS, which will examine and evaluate the most promising scientific approaches for doing this. The Panel on Suspended and Bedded Sediments will provide a consultation on the Strategy, reporting through the EPA Science Advisory Board to the Agency.

The SAB was established by 42 U.S.C. 4365 to provide independent scientific and technical advice, consultation, and recommendations to the EPA Administrator on the technical basis for Agency positions and regulations. The SAB Staff Office provides technical and administrative support to the SAB in conducting its mission.

The project the Panel on Suspended and Bedded Sediments will undertake is expected to be a one-day consultation. Over that period, the Panel will comply with the provisions of FACA and all appropriate SAB procedural policies, including the SAB process for panel formation described in the ''Overview of the Panel Formation Process at the Environmental Protection Agency Science Advisory Board,'' which can be found on the SAB's Web site at: *http://www.epa.gov/sab/pdf/ec02010.pdf*. Those selected to serve on the Panel will review the draft materials identified in this notice and respond to the charge questions provided below.

Background

Water Quality Standards: States, and Tribes with authorization to conduct a water quality standards program, are required by section 303(c) of the Clean Water Act (CWA) to adopt water quality standards. Such water quality standards must protect public health and welfare, protect designated uses, enhance the quality of water and serve the purposes of the CWA. Water quality standards consist of a designated use(s) for a water body, water quality criteria to protect the designated use(s), and an antidegradation policy. Section 101(a) of the CWA specifies that water quality standards should provide, wherever attainable, ''water quality which provides for the protection and propagation of fish, shellfish, and wildlife and provides for recreation in and on the water.'' Section 303(c) states that water quality standards should be established for water bodies taking into consideration their use and value for public water supplies; propagation of fish and wildlife, recreational, agricultural, industrial, navigation, and other purposes.

EPA, under section 304(a) of the CWA periodically publishes water quality criteria guidance for use by States and Tribes in setting water quality standards. This guidance typically contains recommended water quality criteria values or criteria development methodologies. Water quality criteria are levels of individual pollutants or water quality characteristics, or descriptions of conditions of a water body that, if met, will generally protect the designated use(s). Water quality criteria published pursuant to section 304(a) of the CWA are based solely on data and scientific judgements on the relationship between pollutant concentrations and environmental and human health effects and do not reflect consideration of economic impacts or the technological feasibility of meeting the chemical concentrations in ambient water.

States and Tribes may adopt EPA's recommended criteria into their water quality standards or they may adopt water quality criteria modified to reflect site-specific conditions, or criteria derived using other scientifically defensible methods. These criteria recommendations have been critical tools for the States, Tribes, and EPA to control most forms of pollution and improve water quality across the Nation.

Within recent years, however, the States and EPA have identified new issues that are causing significant water quality problems for which water quality criteria have yet to be published or updated. One such concern is the imbalance of suspended solids and bedded sediments (SABS) in water bodies. In many water bodies, SABS are severely out of balance due to human activities within the watershed. In most cases the problem is excessive sediments, but in some cases the problem is too little sediment.

Suspended and Bedded Sediments (SABS): Suspended and bedded sediments are defined by EPA as particulate organic and inorganic matter that suspend in or are carried by the water, and/or accumulate in a loose, unconsolidated form on the bottom of natural water bodies. This includes clean sediment, suspended sediment concentration (SSC), total suspended solids (TSS), bedload, turbidity, or in more common terms, dirt, soils or eroded materials.

In excessive amounts, SABS constitute a major ecosystem stressor. According to the National Water Quality Inventory—2000 Report, excessive sediment was the leading cause of impairment of the Nation's waters. The highest frequency of impairment was reported for rivers and streams, followed by lakes, reservoirs, ponds, and estuaries.

SABS can impair surface water designated uses in various ways. Excessive sediment deposits can severely impact aquatic-life uses by choking spawning gravels, depleting food sources for fish, filling rearing pools, and reducing beneficial habitat structure in stream channels. Sediments can impair aesthetic uses and can cause taste, odor, and other problems in drinking water supplies. Excessive sediment can block water-supply intakes and disturb treatment systems. Excessive turbidity can make swimming and other recreational uses of waters dangerous or undesirable. Turbidity can also block light transmission to the subsurface and disrupt the growth of submerged aquatic vegetation. Insufficient sediment supply can cause impairments to aquatic life uses by resulting in stream channel scour and destruction of habitat.

SABS present a water-quality problem different from that of manmade toxic compounds and similar to that of nutrients, as they naturally occur in water bodies, and in natural or background amounts, they are essential to the ecological function of a water body. These functions include transporting nutrients and replenishing sediment bedloads that create valuable micro-habitats, such as pools and sand bars. Thus, a basic premise for managing suspended and bedded sediments in water bodies to protect aquatic-life uses may be the need to maintain natural levels of SABS in water bodies.

There are also other types of designated uses of water bodies, other than aquatic life, which need to be protected from SABS. These include recreation in and on the water, shipping, drinking water sources, industrial water use and agricultural water use. The premise that SABS levels should be maintained at natural levels may not necessarily be valid for these types of uses. However, water bodies may have multiple use designations including aquatic life as well as those other uses listed above.

Water Quality Criteria for SABS: In 1976, EPA issued a water quality criteria recommendation for solids and turbidity that uses a 10% reduction of the depth of the compensation point for photosynthetic activity. For a variety of reasons, this criterion is seldom, if ever, used by the States. It is questionable whether this criterion would achieve intended protection for all different designated uses for water bodies.

Although most States currently have water quality criteria that can be applied to manage SABS, these are typically based on turbidity, suspended solids or settleable solids, and their effectiveness for dealing with all water quality impairments caused by SABS, especially as benchmarks for aquatic life protection based on natural levels, is questionable. In recent consultation with State representatives, the need for new water quality criteria for SABS or methodologies for deriving them on a site-specific basis was identified as one of the highest priorities for the water quality criteria program. As a result, the EPA Office of Water has concluded that to better manage SABS in all types of water bodies and for all designated uses, State and Tribal water quality managers need new and updated water quality criteria and information for SABS.

The potential approaches for criteria development that EPA's Office of Water is considering investigating in the Strategy for Developing Water Quality Criteria for Suspended and Bedded Sediments (SABS) include the following:

(1) State-by-State Reference Condition Criteria Derivation Approach;

(2) Conditional Probability Approach to Establishing Thresholds;

(3) Toxicological Dose-Response Approach;

(4) Relative Bed Stability and Sedimentation Approach;

(5) Rosgen Geomorphological Approach;

(6) Water Body Use Functional Approach; and

(7) Combinations of above approaches.

General information about water-quality criteria and water-quality standards can be found on the World Wide Web at *http://www.epa.gov/waterscience/standards/*. Information of obtaining a copy of the draft Strategy for Developing Water Quality Criteria for Suspended and Bedded Sediments will be provided at the time the formal meeting announcement is made for this consultation in September, or will be posted on the SAB Web site once the draft is provided to the SAB, whichever is earlier.

Proposed Charge to the Panel: While many questions and much research remain, EPA seeks the opportunity for a consultation with the Science Advisory Board to gain advice and recommendations on the best potential approaches to developing water quality criteria for suspended and bedded sediments as will be described in a draft *Strategy for Developing Water Quality Criteria for Suspended and Bedded Sediments (SABS)* to be prepared by the Office of Water. The Office of Water is also seeking recommendations on additional criteria development approaches for uses of water bodies other than aquatic life, and it is also seeking advice on any potential criteria derivation methodology not included in the Strategy.

SAB Request for Nominations: The EPA SAB is requesting nominations of individuals who are recognized, national-level experts in one or more of the following disciplines to supplement the expertise of the EPEC for this consultation: (a) Fluvial hydrogeomorphology; (b) fluvial habitat dynamics; (c) sediment and turbidity monitoring; and (d) fisheries biology.

Process and Deadline for Submitting Nominations: Any interested person or organization may nominate qualified individuals to add expertise in the above areas for the panel for the consultation on the water quality strategy for suspended and bedded sediments.

Anyone who is unable to submit nominations in electronic format may contact Dr. L. Joseph Bachman at the mailing address given earlier in this notice under the heading **FOR FURTHER INFORMATION CONTACT.** Nominations should be submitted before August 20, 2003. Any questions concerning either this process or any other aspects of this notice should be directed to Dr. Bachman.

The EPA Science Advisory Board Staff Office will acknowledge receipt of nominations and inform nominators of the panel selected. From the nominees identified by respondents to this **Federal Register** notice (termed the ''Widecast''), SAB Staff will develop a smaller subset (known as the ''Short List'') for more detailed consideration. Criteria used by the SAB Staff in developing this Short List are given at the end of the following paragraph. The Short List will be posted on the SAB Web site at *http://www.epa.gov/sab*, and will include, for each candidate, the nominee's name and their biosketch. Public comments will be accepted for 21 calendar days on the Short List. During this comment period, the public will be requested to provide information, analysis or other documentation on nominees that the SAB Staff should consider in evaluating candidates for the specific expertise to add to the panel for the consultation on the water quality strategy for suspended and bedded sediments.

For the EPA SAB, a balanced panel (*i.e.*, committee, subcommittee, or panel) is characterized by inclusion of candidates who possess the necessary domains of knowledge, the relevant scientific perspectives (which, among other factors, can be influenced by work history and affiliation), and the collective breadth of experience to adequately address the charge. Public responses to the Short List candidates will be considered in the selection of the panel, along with information provided by candidates and information gathered by EPA SAB Staff Office independently on the background of each candidate (*e.g.*, financial disclosure information and computer searches to evaluate a nominee's prior involvement with the topic under review). Specific criteria to be used in evaluating an individual subcommittee or panel member include: (a) Scientific and/or technical expertise, knowledge, and experience (primary factors); (b) scientific credibility and impartiality; (c) availability and willingness to serve; (b) absence of financial conflicts of interest; and (e) ability to work constructively and effectively in committees.

Short List candidates will also be required to fill-out the ''Confidential Financial Disclosure Form for Special Government Employees Serving on Federal Advisory Committees at the U.S. Environmental Protection Agency'' (EPA Form 3110–48). This confidential form, which is submitted by EPA SAB Members and Consultants, allows Government officials to determine whether there is a statutory conflict between that person's public responsibilities (which includes membership on an EPA Federal advisory committee) and private interests and activities, or the appearance of a lack of impartiality, as defined by Federal regulation. The form may be viewed and downloaded from the following URL address: *http://www.epa.gov/sab/pdf/epaform3110–48.pdf*. Panel members will be asked to attend one public meeting in late September or early October, 2003 in addition to reviewing background material and a proposed strategy document provided by EPA.

Dated: July 22, 2003.

Vanessa T. Vu,

Director, EPA Science Advisory Board Staff Office.

[FR Doc. 03–19276 Filed 7–29–03; 8:45 am]

BILLING CODE 6560–50–P

ENVIRONMENTAL PROTECTION AGENCY

[FRL–7537–6]

Science Advisory Board Staff Office; Request for Nominations for a U.S. Environmental Protection Agency Science Advisory Board *Ad Hoc* Committee To Be Known as the Homeland Security Advisory Committee (HSAC)

AGENCY: Environmental Protection Agency (EPA).

ACTION: Notice.

SUMMARY: The EPA Science Advisory Board (SAB) Staff Office announces the formation of a new SAB *ad hoc* Committee on Homeland Security known as the Homeland Security Advisory Committee (HSAC), and is soliciting nominations for members of the Committee.

DATES: Nominations should be submitted in time to arrive by August 20, 2003.

ADDRESSES: Nominations should be submitted in electronic format through the *Form for Nominating Individuals to Panels of the EPA Science Advisory Board* provided on the SAB Web site. The form can be accessed through a link on the blue navigational bar on the SAB Web site, *www.epa.gov/sab.* To be considered, all nominations should include the information requested on that form. Anyone who is unable to access nominations on the SAB Web site can obtain a paper copy of the form by contacting Dr. Philip Sayre, Designated Federal Officer (DFO), as indicated below.

FOR FURTHER INFORMATION CONTACT: Any member of the public wishing further information regarding this Request for Nomination may contact Dr. Philip Sayre, by telephone/voice mail at (202) 564–7673, or via e-mail at *sayre.phil@epa.gov.* Those unable to access the nomination forms through the above Web site can contact Dr. Sayre at the following address: Philip Sayre, Ph.D., Science Advisory Board Staff Office, U.S. Environmental Protection Agency (Mail Code 1400A), Suite 6450–R, 1200 Pennsylvania Avenue, NW., Washington, DC 20460–0001. General information about the SAB can be found in the SAB Web site at *http://www.epa.gov/sab.*

SUPPLEMENTARY INFORMATION: *Summary:* The EPA SAB Staff Office is announcing the formation of a new *ad hoc* Committee to help provide advice through the SAB to the Administrator, and other officials in the U.S. Environmental Protection Agency on matters pertaining to EPA's mission in protecting against the environmental and health consequences of terrorism. The SAB Staff Office is soliciting nominations for members of the new Committee.

This Committee is being formed to help provide advice to the Agency, as part of the SAB's mission, established by 42 U.S.C. 4365, to provide independent scientific and technical advice, consultation, and recommendations to the EPA Administrator on the technical bases for EPA regulations.

The work of this Committee is expected to continue for approximately two to three years; the background for the effort is described below. Committee members will help provide advice to the Agency through the SAB. The EPA Administrator may determine that a particular HSAC meeting be partially or fully closed when matters under discussion are covered by one of the Government in the Sunshine Act (5 U.S.C. 552b) open meeting exceptions. The SAB is a chartered Federal Advisory Committee that reports directly to the Administrator.

The HSAC will comply with the openness provisions of the Federal Advisory Committee Act (FACA) and all appropriate SAB procedural policies, including the SAB process for panel formation described in the *EPA Science Advisory Board (SAB) Panel Formation Process: Immediate Steps To Improve Policies and Procedures*—An SAB Commentary (EPA–SAB–EC–COM–002–003), *http://www.epa.gov/sab/pdf/ecm02003.pdf.*

Background: EPA is supporting the President's National Strategy for Homeland Security and the new Department of Homeland Security in specific areas. In keeping with EPA's traditional mission of protecting human health and the environment, the Agency's mission includes protection of the country against the environmental and health consequences of acts of terrorism. EPA is responsible for assisting public and private utilities in securing the nation's drinking and wastewater infrastructure, for assisting those responsible for indoor air, for working with the Department of Homeland Security to support the enhancement of security for our chemical industry and hazardous materials sector, and for responding to and recovering from acts of biological, chemical, certain radiological, and other terrorist attacks. For example, recently EPA has monitored environmental conditions to help protect workers in and around the World Trade Center, and developed and implemented a plan for decontaminating the Hart Senate Office Building. For more information on the EPA Homeland Security Strategic Plan, please see *http://www.epa.gov/epahome/headline_100202.htm.*

The EPA organizations involved in implementation of Homeland Security include the following: The Office of Research and Development (ORD); the Office of Water (OW); the Office of Solid Waste and Emergency Response (OSWER); the Office of Air and Radiation (OAR); the Office of Pesticides, Prevention, and Toxic Substances (OPPTS); the Office of Environmental Information (OEI); and the Office of Enforcement and Compliance Assurance (OECA). Further, two new organizations within EPA have been formed to address homeland security matters: the Office of Homeland Security (OHS) which coordinates activities across the Agency, and the Office of Research and Development's (ORD's) National Homeland Security Research Center (NHSRC). The NHSRC has a 3-year mission to provide appropriate, effective and rapid risk assessment guidelines and technologies to help decision-makers prepare for, detect, contain, and decontaminate chemical and biological attacks directed against buildings and water treatment systems.

The Agency has asked the EPA Science Advisory Board to form an expert group to advise senior managers on matters related to homeland security. Examples of consultations for the Committee could include the following: (1) Detection and characterization of contaminants in water and air, response and mitigation, and prevention and protection; (2) improvements to rapid risk assessment for terrorist agents such as development of information systems and tools, risk estimates and risk communication methodologies; and (3) verification of the performance of technologies that can be used to monitor and ensure the quality of the nation's drinking water supplies, and technologies for use in monitoring indoor environments.

Charge to the Panel: When specific issues are identified for SAB advice, a charge to the Panel and the initiation of SAB HSAC activities will be announced on the SAB Web site at *http://www.epa.gov/sab/panels/paneltopics.html.*

Request for Nominations: The EPA SAB Staff Office requests nominations of individuals who are regarded as national and international level experts in homeland security to serve as Committee members. Areas of expertise sought include at least the following: (a) Atmospheric sciences and air modeling;

(b) engineering expertise for the design and operation of building systems for air treatment and handling; (c) engineering expertise for the design and operation of water treatment and dispersal systems; (d) analytical chemistry for chemical detection methodologies; (e) microbiology related to detection techniques for microbial pathogens; (f) expertise in inactivation and disposal techniques for bulk amounts of materials containing chemical, radiological, and biological agents; (g) radiation health; (h) toxicology; (i) clinical toxicology; (j) microbial pathology; (k) epidemiology; and (l) risk assessment.

Process and Deadline for Submitting Nominations: Any interested person or organization may nominate qualified individuals to serve as committee members in the areas described above. The nominating form requests contact information about the person making the nomination; contact information about the nominee; the disciplinary and specific areas of expertise of the nominee; the nominee's resume; and a general biosketch of the nominee indicating education, expertise, past research, recent service on other advisory committees or with professional associations, and recent grant and/or contract support.

Anyone who is unable to submit nominations through the SAB Web site, or has questions concerning any aspect of the nomination process, may contact Dr. Philip Sayre as indicated above in this FR notice. Nominations should be submitted in time to arrive no later than August 20, 2003.

The EPA Science Advisory Board Staff Office will acknowledge receipt of the nominations. From the nominees identified by respondents to this **Federal Register** notice and through other sources (termed the ''Widecast''), SAB Staff Office will develop a smaller subset (known as the ''Short List'') for more detailed consideration. Criteria used by the SAB Staff Office in developing this Short List are given at the end of the following paragraph. The SAB Staff Office will contact individuals who are considered for inclusion in the Short List to determine whether they are willing to serve on the Committee. The Short List will be posted on the SAB Web site at: *http://www.epa.gov/sab*, and will include, for each candidate, the nominee's name and their biosketch. The Short List also will be available from Dr. Sayre at the address listed above. Public comments will be accepted for 21 calendar days on the Short List. During this comment period, the public will be requested to provide information, analysis or other documentation on nominees that the SAB Staff Office should consider in evaluating candidates for the Committee.

For the EPA SAB, a balanced Committee is characterized by inclusion of candidates who possess the necessary domains of knowledge, the relevant scientific perspectives (which, among other factors, can be influenced by work history and affiliation), and the collective breadth of experience to adequately address the charge. Public responses to the Short List candidates will be considered in the selection of the Committee members, along with information provided by candidates and information gathered by EPA SAB Staff Office independently on the background of each candidate (*e.g.*, financial disclosure information and computer searches to evaluate a nominee's prior involvement with the topic under review). Specific criteria to be used in evaluating individual nominees include: (a) Scientific and/or technical expertise, knowledge, and experience (primary factors); (b) absence of financial conflicts of interest; (c) scientific credibility and impartiality; (d) availability and willingness to serve; and (e) ability to work constructively and effectively in committees.

Those Short List candidates ultimately chosen to serve on the Committee will be appointed as Special Government Employees. Therefore, all Short List candidates will be required to fill out the ''Confidential Financial Disclosure Form for Special Government Employees Serving on Federal Advisory Committees at the U.S. Environmental Protection Agency'' (EPA Form 3110–48). This confidential form allows Government officials to determine whether there is a statutory conflict between that person's public responsibilities as a Special Government Employee and private interests and activities, or the appearance of a lack of impartiality, as defined by Federal regulation. The form may be viewed and downloaded from the following URL address: *http://www.epa.gov/sab/pdf/epaform3110–48.pdf*. Finally, some members may need to complete national security clearance forms to obtain access to sensitive or classified homeland security information. Committee members will likely be asked to attend one to two meetings and public conferences per year over the anticipated course of the advisory activity.

Dated: July 24, 2003.

Vanessa T. Vu,

Director, EPA Science Advisory Board Staff Office.

[FR Doc. 03–19352 Filed 7–29–03; 8:45 am]

BILLING CODE 6560–50–P

ENVIRONMENTAL PROTECTION AGENCY

[OPP–2003–0258; FRL–7319–9]

Tetrahedron, Inc.; Transfer of Data

AGENCY: Environmental Protection Agency (EPA).

ACTION: Notice.

SUMMARY: This notice announces that pesticide related information submitted to EPA's Office of Pesticide Programs (OPP) pursuant to the Federal Insecticide, Fungicide, and Rodenticide Act (FIFRA) and the Federal Food, Drug, and Cosmetic Act (FFDCA), including information that may have been claimed as Confidential Business Information (CBI) by the submitter, will be transferred to Tetrahedron, Inc. in accordance with 40 CFR 2.307(h)(3) and 2.308(i)(2). Tetrahedron, Inc. has been awarded multiple contracts to perform work for EPA, and access to this information will enable Tetrahedron, Inc. to fulfill the obligations of the contracts.

DATES: Tetrahedron, Inc. will be given access to this information on or before August 4, 2003.

FOR FURTHER INFORMATION CONTACT: Erik Johnson, FIFRA Security Officer, Information Resources and Services Division (7502C), Office of Pesticide Programs, Environmental Protection Agency, 1200 Pennsylvania Ave., NW., Washington, DC 20460–0001; telephone number: (703) 305–7248; e-mail address: *johnson.erik@epa.gov*.

SUPPLEMENTARY INFORMATION:

I. General Information

A. Does this Action Apply to Me?

This action applies to the public in general. As such, the Agency has not attempted to describe all the specific entities that may be affected by this action. If you have any questions regarding the applicability of this action to a particular entity, consult the person listed under **FOR FURTHER INFORMATION CONTACT**.

B. How Can I Get Copies of this Document and Other Related Information?

1. *Docket*. EPA has established an official public docket for this action under docket identification (ID) number

OPP–2003–0258. The official public docket consists of the documents specifically referenced in this action, any public comments received, and other information related to this action. Although a part of the official docket, the public docket does not include Confidential Business Information (CBI) or other information whose disclosure is restricted by statute. The official public docket is the collection of materials that is available for public viewing at the Public Information and Records Integrity Branch (PIRIB), Rm. 119, Crystal Mall #2, 1921 Jefferson Davis Hwy., Arlington, VA. This docket facility is open from 8:30 a.m. to 4 p.m., Monday through Friday, excluding legal holidays. The docket telephone number is (703) 305–5805.

2. *Electronic access*. You may access this **Federal Register** document electronically through the EPA Internet under the ''**Federal Register**'' listings at *http://www.epa.gov/fedrgstr/*.

An electronic version of the public docket is available through EPA's electronic public docket and comment system, EPA Dockets. You may use EPA Dockets at *http://www.epa.gov/edocket/* to submit or view public comments, access the index listing of the contents of the official public docket, and to access those documents in the public docket that are available electronically. Although not all docket materials may be available electronically, you may still access any of the publicly available docket materials through the docket facility identified in Unit I.B.1. Once in the system, select ''search,'' then key in the appropriate docket ID number.

II. Contractor Requirements

Under contract number 68–W–03–039, the contractor will perform the following:

The purpose of this contract is to support EPA and Agency position documents, reviews, and scientific technical assessments of potential hazards and risks of pesticides to human health and the environment. The contractor shall create Data Evaluation Reports which involve converting the studies supplied into a format specified by the program office and shall include secondary and Quality Assurance contractor reviews as specified:

- Review and evaluation of biopesticide, mammalian, non-target organisms toxicity, environmental fate, and product chemistry data.
- Review of confidential statement of formulations, manufacturing process, and labels
- Statements for compliance with United States Department of Agriculture National Organic Program Standards.
- Preliminary risk assessment for biopesticides.
- General assistance-biopesticide registration package review.

This contract involves no subcontractors.

EPA has determined that the contract described in this document involve work that is being conducted in connection with FIFRA, in that pesticide chemicals will be the subject of certain evaluations to be made under this contract. These evaluations may be used in subsequent regulatory decisions under FIFRA.

Some of this information may be entitled to confidential treatment. The information has been submitted to EPA under sections 3, 4, 6, and 7 of FIFRA and under sections 408 and 409 of FFDCA.

In accordance with the requirements of 40 CFR 2.307(h)(3), the contracts with Tetrahedron, Inc., prohibits use of the information for any purpose not specified in these contracts; prohibits disclosure of the information to a third party without prior written approval from the Agency; and requires that each official and employee of the contractor sign an agreement to protect the information from unauthorized release and to handle it in accordance with the FIFRA Information Security Manual. In addition, Tetrahedron, Inc. is required to submit for EPA approval a security plan under which any CBI will be secured and protected against unauthorized release or compromise. No information will be provided to Tetrahedron, Inc. until the requirements in this document have been fully satisfied. Records of information provided to Tetrahedron, Inc. will be maintained by EPA Project Officers for these contracts. All information supplied to Tetrahedron, Inc. by EPA for use in connection with these contracts will be returned to EPA when Tetrahedron, Inc. has completed its work.

List of Subjects

Environmental protection, Business and industry, Government contracts, Government property, Security measures.

Dated: July 21, 2003.

Arnold E. Layne,

Director, Information Resources and Services Division, Office of Pesticide Programs.

[FR Doc. 03–19358 Filed 7–29–03; 8:45 am]

[BILLING CODE 6560–50–S

ENVIRONMENTAL PROTECTION AGENCY

[OPPT–2003–0027; FRL–7320–3]

Endocrine Disruptor Methods Validation Subcommittee under the National Advisory Council for Environmental Policy and Technology; Notice of Public Meeting

AGENCY: Environmental Protection Agency (EPA).

ACTION: Notice of public meeting.

SUMMARY: There will be a meeting of the Endocrine Disruptor Methods Validation Subcommittee (EDMVS), a Subcommittee under the National Advisory Council for Environmental Policy and Technology (NACEPT), on August 18–20, 2003. This meeting, as with all EDMVS meetings, is open to the public. Seating is on a first-come basis.

DATES: The meeting will be held on Monday, August 18, 2003, from 1:30 p.m. to 5:45 p.m.; Tuesday, August 19, 2003, from 7:45 a.m. to 2:30 p.m.; and Wednesday, August 20, 2003, from 8 a.m. to 2:45 p.m. mountain daylight time.

Individuals requiring special accommodations at the meeting, including wheelchair access, should contact Jane Smith at the address listed under **FOR FURTHER INFORMATION CONTACT** at least 5 business days prior to the meeting, so appropriate arrangements can be made.

ADDRESSES: The meeting will be held at The Table Mountain Inn, 1310 Washington, Ave., Golden, CO 80401.

Requests and comments may be submitted electronically, by telephone, fax, or through hand delivery/courier. Follow the detailed instructions as provided in Unit I.C. of the **SUPPLEMENTARY INFORMATION**.

FOR FURTHER INFORMATION CONTACT: Jane Smith, Designated Federal Official for the EDMVS, Exposure Assessment Coordination and Policy Division (7203M), Office of Science Coordination and Policy, Environmental Protection Agency, 1200 Pennsylvania Ave., NW., Washington, DC 20460–0001; telephone number: (202) 564–8476; fax number: (202) 564–8483; or e-mail address: *smith.jane-scott@epa.gov*.

SUPPLEMENTARY INFORMATION:

I. General Information

A. Does this Notice Apply to Me?

This action is directed to the public in general. This action may, however, be of interest if you produce, manufacture, use, consume, work with or import pesticide chemicals and other

substances. To determine whether you or your business may have an interest in this notice you should carefully examine section 408(p) of the Federal Food, Drug, and Cosmetic Act (FFDCA), as amended by the Food Quality Protection Act (FQPA) of 1996 (Public Law 104–170), 21 U.S.C. 346a(p) and amendments to the Safe Drinking Water Act (SDWA) (Public Law 104–182), 42 U.S.C. 300j–17. Since other entities may also be interested, the Agency has not attempted to describe all the specific entities that may be interested in this action. If you have any questions regarding this action, consult the person listed under **FOR FURTHER INFORMATION CONTACT**.

B. How Can I Get Additional Information, Including Copies of this Document or Other Related Documents?

1. *Docket*. EPA has established an official public docket for this action under docket identification (ID) number OPPT–2003–0027. The official public docket consists of the documents specifically referenced in this action, any public comments received, and other related information. Although a part of the official docket, the public docket does not include Confidential Business Information (CBI) or other information whose disclosure is restricted by statute. The official public docket is the collection of materials that are available for public viewing at the EPA Docket Center, Rm. B102-Reading Room, EPA West, 1301 Constitution Ave., NW., Washington, DC. The EPA Docket Center is open from 8:30 a.m. to 4:30 p.m., Monday through Friday, excluding legal holidays. The EPA Docket Center Reading Room telephone number is (202) 566–1744 and the telephone number for the OPPT Docket, which is located in EPA Docket Center, is (202) 566–0282.

2. *Electronic access*. A meeting agenda, a list of EDMVS members and information from previous meetings are available electronically, from the EPA Internet Home Page at *http://www.epa.gov/scipoly/oscpendo/edmvs.htm*. You may also go directly to the ''**Federal Register**'' listings at *http://www.epa.gov/fedrgstr/*.

An electronic version of the public docket is available through EPA's electronic docket and comment system, EPA Dockets. You may use EPA Dockets at http://www.epa.gov/edocket to view public comments, access the index listing of the contents of the official public docket, and to access those documents in the public docket that are available electronically. Once in the system, select ''search,'' then key in docket ID number OPPT–2003–0027. Although not all docket materials may be available electronically, you may still access any of the publicly available docket materials through the docket facility identified in Unit I.B.I.

C. How Can I Request to Participate in the Meeting?

You may submit a request to participate in the meeting through electronic mail, telephone, fax, or in person. EPA would normally accept requests by mail, but in this time of delays in delivery of government mail due to health and security concerns, EPA cannot assure your request would arrive in a timely manner. Do not submit any information in your request that is considered CBI. Your request must be received by EPA on or before August 12, 2003. To ensure proper receipt by EPA, it is imperative that you identify docket ID number OPPT–2003–0027 in the subject line on the first page of your request.

1. *Electronically*. You may submit your request to participate electronically. Do not submit any information electronically that you consider to be CBI. Use WordPerfect 6.1/8.0 or ASCII file format and avoid the use of special characters and any form of encryption.

i. *EPA Docket*. You may use EPA's electronic public docket to submit a request to participate in this meeting. Go to EPA Dockets at *http://epa.gov/edocket*, and follow the online instructions for submitting materials. Once in the system, select ''search,'' and then key in docket ID number OPPT–2003–0027.

ii. *E-mail*. Request to participate may be sent by e-mail to the person listed in **FOR FURTHER INFORMATION CONTACT**, or directly to the docket at *oppt.ncic@epa.gov*, Attention: Docket ID Number OPPT–2003–0027.

2. *Telephone or fax*. Send your request to participate to the individual identified in **FOR FURTHER INFORMATION CONTACT**.

D. How and to Whom Do I Submit Comments?

In accordance with the Federal Advisory Committee Act (FACA), the public is encouraged to submit written comments on the topic of this meeting. The EDMVS will have a brief period available during the meeting for public comment. It is the policy of the EDMVS to accept written public comments of any length, and to accommodate oral public comments whenever possible. The EDMVS expects that public statements presented at its meeting will be on the meeting topic and not be repetitive of previously submitted oral or written statements.

You may submit comments electronically or through hand delivery/courier. To ensure proper receipt by EPA, identify the appropriate docket ID number in the subject line on the first page of your comment. EPA is not required to consider these late comments. If you wish to submit CBI or information that is otherwise protected by statute, please follow the instructions in Unit I.E. Do not use EPA Dockets or e-mail to submit CBI or information protected by statute.

1. *Electronically*. If you submit an electronic comment as prescribed in this unit, EPA recommends that you include your name, mailing address, and an e-mail address or other contact information in the body of your comment. Also include this contact information on the outside of any disk or CD ROM you submit, and in any cover letter accompanying the disk or CD ROM. This ensures that you can be identified as the submitter of the comment and allows EPA to contact you in case EPA cannot read your comment due to technical difficulties or needs further information on the substance of your comment. EPA's policy is that EPA will not edit your comment, and any identifying or contact information provided in the body of a comment will be included as part of the comment that is placed in the official public docket, and made available in EPA's electronic public docket. If EPA cannot read your comment due to technical difficulties and cannot contact you for clarification, EPA may not be able to consider your comment.

i. *EPA Dockets*. Your use of EPA's electronic public docket to submit comments to EPA electronically is EPA's preferred method for receiving comments. Go directly to EPA Dockets at *http://www.epa.gov/edocket/*, and follow the online instructions for submitting comments. Once in the system, select ''search,'' and then key in docket ID number OPPT–2003–0027. The system is an ''anonymous access'' system, which means EPA will not know your identity, e-mail address, or other contact information unless you provide it in the body of your comment.

ii. *E-mail*. Comments may be sent by e-mail to *oppt.ncic@epa.gov*, Attention: Docket ID Number OPPT–2003–0027. In contrast to EPA's electronic public docket, EPA's e-mail system is not an ''anonymous access'' system. If you send an e-mail comment directly to the docket without going through EPA's electronic public docket, EPA's e-mail system automatically captures your e-mail address. E-mail addresses that are

automatically captured by EPA's e-mail system are included as part of the comment that is placed in the official public docket, and made available in EPA's electronic public docket.

iii. *Disk or CD ROM*. You may submit comments on a disk or CD ROM by courier or package service, such as Federal Express to the address identified in Unit I.D.2. These electronic submissions will be accepted in WordPerfect or ASCII file format. Avoid the use of special characters and any form of encryption.

2. *By hand delivery or courier*. Deliver your comments to: OPPT Document Control Office (DCO) in EPA East Bldg., Rm. 6428, 1201 Constitution Ave., NW., Washington, DC. Attention: Docket ID Number OPPT–2003–0027. The DCO is open from 8 a.m. to 4 p.m., Monday through Friday, excluding legal holidays. The telephone number for the DCO is (202) 564–8930.

E. How Should I Submit CBI to the Agency?

Do not submit information that you consider to be CBI electronically through EPA's electronic public docket or by e-mail. You may claim information that you submit to EPA as CBI by marking any part or all of that information as CBI (if you submit CBI on disk or CD ROM, mark the outside of the disk or CD ROM as CBI and then identify electronically within the disk or CD ROM the specific information that is CBI). Information so marked will not be disclosed except in accordance with procedures set forth in 40 CFR part 2.

In addition to one complete version of the comment that includes any information claimed as CBI, a copy of the comment that does not contain the information claimed as CBI must be submitted for inclusion in the public docket and EPA's electronic public docket. If you submit the copy that does not contain CBI on disk or CD ROM, mark the outside of the disk or CD ROM clearly that it does not contain CBI. Information not marked as CBI will be included in the public docket and EPA's electronic public docket without prior notice. If you have any questions about CBI or the procedures for claiming CBI, please consult the technical person listed under **FOR FURTHER INFORMATION CONTACT**.

II. Background

In 1996, through enactment of the Food Quality Protection Act, which amended the Federal Food, Drug, and Cosmetic Act, Congress directed EPA to develop a screening program, using appropriate validated test systems and other scientifically relevant information, to determine whether certain substances may have hormonal effects in humans. In 1996, EPA chartered a scientific advisory committee, the Endocrine Disruptor Screening and Testing Advisory Committee (EDSTAC), under the authority of the Federal Advisory Committee Act (FACA) to advise it on establishing a program to carry out Congress' directive. EDSTAC recommended a multi-step approach including a series of screens (Tier I screens) and tests (Tier II tests) for determining whether a chemical substance may have an effect in humans similar to that produced by naturally occurring hormones. EPA adopted almost all of EDSTAC's recommendations in the program that it developed, the Endocrine Disruptor Screening Program (EDSP), to carry out Congress' directive.

EDSTAC also recognized that there currently are no validated test systems for determining whether a chemical may have an effect in humans that is similar to an effect produced by naturally occurring hormones. Consequently, EPA is in the process of developing and validating the screens and tests that EDSTAC recommended for inclusion in the EDSP. In carrying out this validation exercise, EPA is working closely with, and adhering to the principles of the Interagency Coordinating Committee for the Validation of Alternate Methods (ICCVAM). EPA also is working closely with the Organization for Economic Cooperation and Development's (OECD) Endocrine Testing and Assessment Task Force to validate and harmonize endocrine screening tests of international interest.

Finally, to ensure that EPA has the best and most up-to-date advice available regarding the validation of the screens and tests in the EDSP, EPA formed the Endocrine Disruptor Methods Validation Subcommittee (EDMVS) of the National Advisory Council for Environmental Policy and Technology (NACEPT). EDMVS provides independent advice and counsel to the Agency through NACEPT, on scientific and technical issues related to validation of the EDSP Tier I screens and Tier II tests, including advice on methods for reducing animal use, refining procedures involving animals to make them less stressful, and replacing animals where scientifically appropriate.

The EDMVS has held seven meetings since its establishment in September 2001. The objectives of the first meeting, which was held in October 2001, (docket control number OPPT–42212D) were for EPA to provide:

1. An overview of EPA's Endocrine Disruptor Program.
2. Background information on test protocol validation and approaches.
3. For the EDMVS to develop a clear understanding of their scope, purpose, and operating procedures.
4. The EDMVS and the EDSP to determine the next steps.

The objectives of the December 2001 meeting (docket control number OPPT–42212E) were for the EDMVS to provide input and advice on:

1. EDMVS's mission statement and work plan.
2. The *in utero* through lactation assay detailed review paper.
3. The pubertal assay study design for the multi-dose and chemical array protocols.
4. The mammalian one-generation study design.

The objectives of the March 2002 meeting (docket control number 42212F) were for the EDMVS to provide input and advice on:

1. EPA's implementation process and practical aspects of validation.
2. The *in utero* through lactation assay protocol.
3. The fish reproduction assay detailed review paper.
4. Special studies, the fathead minnow assays, vitellogenin assay, and avian dosing protocol.
5. The steroidogenesis detailed review paper.
6. The aromatase detailed review paper.
7. A proposed standard suite of chemicals for testing in the Tier I screening assays.
8. The current efforts related to evaluating the relevance of animal data to human health.
9. EPA's approach to addressing low dose issues.

The objective of the June 2002 teleconference meeting (docket ID number OPPT–2002–0020) was for the EDMVS to provide input and advice on the steroidogenesis detailed review paper.

The objectives of the July 2002 meeting (docket ID number OPPT–2002–0029) were:

1. To review the screening criteria, recommended by EDSTAC and adopted by EDSP for screens.
2. To receive an update of the National Interagency Center for the Evaluation of Alternate Toxicological Methods (NICEATM) estrogen and androgen receptor binding efforts.
3. To discuss and provide advice on general dose setting issues; and to provide comments and advice on:

- A pubertal--special study--restricted feeding.

- A mammalian 2-generation draft propylthiouracil (PTU) special study.
- An amphibian metamorphosis detailed review paper.
- An invertebrate detailed review paper.

The objective of the December 2002 teleconference meeting (docket ID number OPPT–2002–0059) was for the EDMVS to provide input and advice on the Tier II fish life cycle assay detailed review paper.

The objectives of the June 5–6, 2003 (docket ID number OPPT–2003–0016) were for EDMVS to provide input and advice on:

1. The Tier II mammalian 2-generation special study on the one-generation extension results.

2. The Tier I steroidogenesis (sliced testes) study results.

3. The Tier I pre-optimization, substrate characterization for aromatase placental tissue study.

III. Objectives of the August 18–20, 2003 Meeting

The objectives of the August 18–20 meeting (docket ID number OPPT–2003–0027) are to:

1. Review and discuss the status/results of the prevalidation work on:

- The fish screening assay, specifically: The survey of vitellogenin methods in fathead minnow, zebrafish and medaka; the comparative evaluation of the fathead minnow assays; and the fish screen (non-spawning) assay.
- The steroidogenesis assay optimized protocol.

2. Provide input and advice on the:

- EDSP's validation plans for the fish screening assay and steroidogenesis assay.
- Strain/species white paper.
- Chemicals used in EDSP's prevalidation and validation.
- Avian detailed review paper.
- Issues related to the pubertal assays.

3. Receive an update on the amphibian workshop conducted recently.

A list of the EDMVS members and meeting materials are available on our web site (*http://www.epa.gov/scipoly/oscpendo/edmvs.htm*) and in the public docket.

List of Subjects

Environmental protection, Endocrine system, Endocrine disruptors, Endocrine disruptor screening program.

Dated: July 23, 2003.

Kathryn R. Mahaffey,

Acting Director, Office of Science Coordination and Policy, Office of Prevention, Pesticides and Toxic Substances.

[FR Doc. 03–19359 Filed 7–29–03; 8:45 am]

BILLING CODE 6560–50–S

ENVIRONMENTAL PROTECTION AGENCY

[FRL–7536–5]

Science Advisory Board Staff Office; Advisory Council on Clean Air Compliance Analysis Health Effects Subcommittee; Notification of Upcoming Public Teleconference and Meeting

AGENCY: Environmental Protection Agency (EPA).

ACTION: Notice.

SUMMARY: The EPA Science Advisory Board Staff Office is announcing a public teleconference and a public meeting of the Advisory Council on Clean Air Compliance Analysis (Council) Health Effects Subcommittee (HES).

DATES:

August 8, 2003. A public teleconference call meeting for the HES will be held from 11 a.m. to 12:30 p.m. (eastern time).

August 27–29, 2003. A public meeting for the HES will be held from 9 a.m. on August 27, 2003 to 2:30 p.m on August 29, 2003 (eastern time).

ADDRESSES: Participation in the teleconference meeting will be by teleconference only. The meeting location for the August 27–29, 2003, meeting of the HES will be in Washington, DC. The meeting location will be announced on the SAB Web site, *http://www.epa/sab* two weeks before the meeting.

FOR FURTHER INFORMATION CONTACT: Members of the public who wish to obtain the call-in number and access code to participate in the teleconference meeting may contact Ms. Sandra Friedman, EPA Science Advisory Board Staff, at telephone/voice mail: (202) 564–2526; or via e-mail at *friedman.sandra@epa.gov*, or Ms. Delores Darden, EPA Science Advisory Board Staff at telephone/voice mail: (202) 564–2282; or via e-mail at *darden.delores@epa.gov*. Any member of the public wishing further information regarding the Council or the HES may contact Dr. Angela Nugent, Designated Federal Officer (DFO), U.S. EPA Science Advisory Board (1400A), 1200 Pennsylvania Avenue, NW., Washington, DC 20460; by telephone/voice mail at (202) 564–4562; or via e-mail at *nugent.angela@epa.gov*. General information about the SAB can be found in the SAB Web site at *http://www.epa.gov/sab*.

SUPPLEMENTARY INFORMATION:

Background. Pursuant to the Federal Advisory Committee Act, Public Law 92–463, Notice is given that the HES will hold a public teleconference, as described above, to prepare for the public meeting, also described above. The purpose of the public meeting is to advise the Agency on its plan to develop a health effects assessment for the third in a series of statutorily mandated comprehensive analyses of the total costs and benefits of programs implemented pursuant to the Clean Air Act.

Background on the Council, the HES, and on the advisory project was provided in a **Federal Register** notice published on February 14, 2003 (68 FR 7531–7534).

The HES will be providing advice, through the Council, on the review document, ''Benefits and Costs of the Clean Air Act 1990–2020; Revised Analytical Plan for EPA's Second Prospective Analysis'' currently found at the following Web site, maintained by EPA's Office of Air and Radiation at: *http://www.epa.gov/oar/sect812/* under the link ''Study Blueprint and Charge Questions Electronic Copy.'' This link provides electronic access to the Revised Analytical Plan, the ''change pages'' given to the Council and HES in July 2003, and the detailed review charge questions.

Procedures for Providing Public Comment. It is the policy of the EPA Science Advisory Board (SAB) Staff Office to accept written public comments of any length, and to accommodate oral public comments whenever possible. The EPA SAB Staff Office expects that public statements presented at its meetings will not be repetitive of previously submitted oral or written statements. *Oral Comments:* In general, each individual or group requesting an oral presentation at a face-to-face meeting will be limited to a total time of ten minutes (unless otherwise indicated). For conference call meetings, opportunities for oral comment will usually be limited to no more than three minutes per speaker and no more than fifteen minutes total. Interested parties should contact the Designated Federal Official (DFO) at least one week prior to the meeting in order to be placed on the public speaker list for the meeting. Speakers should bring at least 35 copies of their comments and presentation

slides for distribution to the participants and public at the meeting. *Written Comments:* Although written comments are accepted until the date of the meeting (unless otherwise stated), written comments should be received in the SAB Staff Office at least one week prior to the meeting date so that the comments may be made available to the committee for their consideration. Comments should be supplied to the DFO at the address/contact information noted above in the following formats: One hard copy with original signature, and one electronic copy via e-mail (acceptable file format: Adobe Acrobat, WordPerfect, Word, or Rich Text files (in IBM-PC/Windows 95/98 format). Those providing written comments and who attend the meeting are also asked to bring 35 copies of their comments for public distribution.

Meeting Accommodations: Individuals requiring special accommodation to access these meetings, should contact Dr. Nugent at least five business days prior to the meeting so that appropriate arrangements can be made.

Dated: July 22, 2003.

Vanessa T. Vu,

Director, EPA Science Advisory Board Staff Office.

[FR Doc. 03–19277 Filed 7–29–03; 8:45 am]

BILLING CODE 6560–50–P

ENVIRONMENTAL PROTECTION AGENCY

[OPP–2002–0327; FRL–7284–6]

Pesticide Reregistration Performance Measures and Goals

AGENCY: Environmental Protection Agency (EPA).

ACTION: Notice.

SUMMARY: This notice announces EPA's progress in meeting its performance measures and goals for pesticide reregistration during fiscal year 2002. The Federal Insecticide, Fungicide, and Rodenticide Act (FIFRA) requires EPA to publish information about EPA's annual achievements in this area. This notice discusses the integration of tolerance reassessment with the reregistration process, and describes the status of various regulatory activities associated with reregistration and tolerance reassessment. The notice gives total numbers of chemicals and products reregistered, tolerances reassessed, Data Call-Ins issued, and products registered under the ''fast-track'' provisions of FIFRA. Finally, this notice contains the schedule for completion of activities for specific chemicals during fiscal years 2003 and 2004.

DATES: This notice is not subject to a formal comment period. Nevertheless, EPA welcomes input from stakeholders and the general public. Written comments, identified by the docket ID number [OPP–2002–0327], should be received on or before September 29, 2003.

ADDRESSES: Comments may be submitted by mail, electronically, or in person. Please follow the detailed instructions for each method as provided in Unit I. of the **SUPPLEMENTARY INFORMATION** section of this notice.

FOR FURTHER INFORMATION CONTACT: Carol P. Stangel, Special Review and Reregistration Division (7508C), Office of Pesticide Programs, Environmental Protection Agency, 1200 Pennsylvania Ave., NW., Washington, DC 20460, telephone: (703) 308–8007, e-mail: stangel.carol@epa.gov.

SUPPLEMENTARY INFORMATION:

I. Important Information

A. Does this Apply to Me?

This action is directed to the public in general. Although this action may be of particular interest to persons who are interested in the progress and status of EPA's pesticide reregistration and tolerance reassessment programs, the Agency has not attempted to describe all the specific entities that may be affected by this action. If you have any questions regarding the information in this notice, consult the person listed under **FOR FURTHER INFORMATION CONTACT**.

B. How Can I Get Additional Information or Copies of Support Documents?

1. *Docket.* EPA has established an official public docket for this action under docket ID number OPP–2002–0327. The official public docket consists of the documents specifically referenced in this action, any public comments received, and other information related to this action. Although, a part of the official docket, the public docket does not include Confidential Business Information (CBI) or other information whose disclosure is restricted by statute. The official public docket is the collection of materials that is available for public viewing at the Public Information and Records Integrity Branch (PIRIB), Rm. 119, Crystal Mall #2, 1921 Jefferson Davis Hwy., Arlington, VA. This docket facility is open from 8:30 a.m. to 4 p.m., Monday through Friday, excluding legal holidays. The docket telephone number is (703) 305–5805.

2. *Electronic access.* You may access this **Federal Register** document electronically through the EPA internet under the ''**Federal Register**'' listings at http://www.epa.gov/fedrgstr/. To access information about pesticide reregistration, go to the home page for the Office of Pesticide Programs at www.epa.gov/pesticides and select ''Reregistration'' under ''Regulating Pesticides,'' or go directly to www.epa.gov/pesticides/reregistration/.

An electronic version of the public docket is available through EPA's electronic public docket and comment system, EPA Dockets. You may use EPA Dockets at http://www.epa.gov/edocket/ to submit or view public comments, access the index listing of the contents of the official public docket, and to access those documents in the public docket that are available electronically. Although not all docket materials may be available electronically, you may still access any of the publicly available docket materials through the docket facility identified in Unit I.B.1. Once in the system, select ''search,'' then key in the appropriate docket ID number.

Certain types of information will not be placed in EPA Dockets. Information claimed as CBI and other information whose disclosure is restricted by statute, which is not included in the official public docket, will not be available for public viewing in EPA's electronic public docket. EPA's policy is that copyrighted material will not be placed in EPA's electronic public docket but will be available only in printed, paper form in the official public docket. To the extent feasible, publicly available docket materials will be made available in EPA's electronic public docket. When a document is selected from the index list in EPA Dockets, the system will identify whether the document is available for viewing in EPA's electronic public docket. Although, not all docket materials may be available electronically, you may still access any of the publicly available docket materials through the docket facility identified in Unit I.B. EPA intends to work towards providing electronic access to all of the publicly available docket materials through EPA's electronic public docket.

For public commenters, it is important to note that EPA's policy is that public comments, whether submitted electronically or in paper, will be made available for public viewing in EPA's electronic public docket as EPA receives them and without change, unless the comment contains copyrighted material, CBI, or

other information whose disclosure is restricted by statute. When EPA identifies a comment containing copyrighted material, EPA will provide a reference to that material in the version of the comment that is placed in EPA's electronic public docket. The entire printed comment, including the copyrighted material, will be available in the public docket.

Public comments submitted on computer disks that are mailed or delivered to the docket will be transferred to EPA's electronic public docket. Public comments that are mailed or delivered to the docket will be scanned and placed in EPA's electronic public docket. Where practical, physical objects will be photographed, and the photograph will be placed in EPA's electronic public docket along with a brief description written by the docket staff.

C. How and To Whom Do I Submit Comments?

You may submit comments electronically, by mail, or through hand delivery/courier. To ensure proper receipt by EPA, identify the appropriate docket ID number in the subject line on the first page of your comment. Please ensure that your comments are submitted within the specified comment period. Comments received after the close of the comment period will be marked ''late.'' EPA is not required to consider these late comments. If you wish to submit CBI or information that is otherwise protected by statute, please follow the instructions in Unit I.D. Do not use EPA Dockets or e-mail to submit CBI or information protected by statute.

1. *Electronically*. If you submit an electronic comment as prescribed in this unit, EPA recommends that you include your name, mailing address, and an e-mail address or other contact information in the body of your comment. Also include this contact information on the outside of any disk or CD ROM you submit, and in any cover letter accompanying the disk or CD ROM. This ensures that you can be identified as the submitter of the comment, and allows EPA to contact you in case EPA cannot read your comment due to technical difficulties or needs further information on the substance of your comment. EPA's policy is that EPA will not edit your comment, and any identifying or contact information provided in the body of a comment will be included as part of the comment that is placed in the official public docket, and made available in EPA's electronic public docket. If EPA cannot read your comment due to technical difficulties and cannot contact you for clarification, EPA may not be able to consider your comment.

2. *EPA Dockets—i*. Your use of EPA's electronic public docket to submit comments to EPA electronically is EPA's preferred method for receiving comments. Go directly to EPA Dockets at http://www.epa.gov/edocket, and follow the online instructions for submitting comments. Once in the system, select ''search,'' and then key in docket ID number OPP–2002–0327. The system is an, ''anonymous access'' system, which means EPA will not know your identity, e-mail address, or other contact information unless you provide it in the body of your comment.

ii. *E-mail*. Comments may be sent by e-mail to opp-docket@epa.gov, Attention: Docket ID Number OPP–2002–0327. In contrast to EPA's electronic public docket, EPA's e-mail system is not an ''anonymous access'' system. If you send an e-mail comment directly to the docket without going through EPA's electronic public docket, EPA's e-mail system automatically captures your e-mail address. E-mail addresses that are automatically captured by EPA's e-mail system are included as part of the comment that is placed in the official public docket, and made available in EPA's electronic public docket.

iii. *Disk or CD ROM*. You may submit comments on a disk or CD ROM that you mail to the mailing address identified in Unit I.C.2. These electronic submissions will be accepted in WordPerfect or ASCII file format. Avoid the use of special characters and any form of encryption.

2. *By mail*. Send your comments to: Public Information and Records Integrity Branch (PIRIB), Office of Pesticide Programs (OPP), Environmental Protection Agency (7502C), 1200 Pennsylvania Ave., NW., Washington, DC 20460–0001, Attention: Docket ID Number OPP– 2002–0327.

3. *By hand delivery or courier*. Deliver your comments to: Public Information and Records Integrity Branch (PIRIB), Office of Pesticide Programs (OPP), Environmental Protection Agency, Rm. 119, Crystal Mall #2, 1921 Jefferson Davis Hwy., Arlington, VA, Attention: Docket ID Number OPP–2002–0327. Such deliveries are only accepted during the docket's normal hours of operation as identified in Unit I.B.1.

D. How Should I Submit CBI To the Agency?

Do not submit information that you consider to be CBI electronically through EPA's electronic public docket or by e-mail. You may claim information that you submit to EPA as CBI by marking any part or all of that information as CBI (if you submit CBI on disk or CD ROM, mark the outside of the disk or CD ROM as CBI and then identify electronically within the disk or CD ROM the specific information that is CBI). Information so marked will not be disclosed except in accordance with procedures set forth in 40 CFR part 2.

In addition to one complete version of the comment that includes any information claimed as CBI, a copy of the comment that does not contain the information claimed as CBI must be submitted for inclusion in the public docket and EPA's electronic public docket. If you submit the copy that does not contain CBI on disk or CD ROM, mark the outside of the disk or CD ROM clearly that it does not contain CBI. Information not marked as CBI will be included in the public docket and EPA's electronic public docket without prior notice. If you have any questions about CBI or the procedures for claiming CBI, please consult the person listed under **FOR FURTHER INFORMATION CONTACT**.

II. Background

EPA must establish and publish in the **Federal Register** its annual performance measures and goals for pesticide reregistration, tolerance reassessment, and expedited registration, under section 4(l) of FIFRA, as amended by the Food Quality Protection Act of 1996 (FQPA). Specifically, such measures and goals are to include:

- The status of reregistration.
- The number of products reregistered, canceled, or amended.
- The number and type of data requests or Data Call-In (DCI) notices under section 3(c)(2)(B) issued to support product reregistration by active ingredient.
- Progress in reducing the number of unreviewed, required reregistration studies.
- The aggregate status of tolerances reassessed.
- The number of applications for registration submitted under subsection (k)(3), expedited processing and review of similar applications, that were approved or disapproved.
- The future schedule for reregistrations in the current and succeeding fiscal year.
- The projected year of completion of the reregistrations under section 4.

FIFRA, as amended in 1988, authorizes EPA to conduct a comprehensive pesticide reregistration program--a complete review of the human health and environmental effects of older pesticides originally registered before November 1, 1984. Pesticides meeting today's scientific and regulatory

standards may be declared ''eligible'' for reregistration. To be eligible, an older pesticide must have a substantially complete data base, and must not cause unreasonable adverse effects to human health or the environment when used according to Agency approved label directions and precautions.

In addition, all pesticides with food uses must meet the safety standard of section 408 of the Federal Food, Drug, and Cosmetic Act (FFDCA) 21 U.S.C. 346a, as amended by the Food Quality Protection Act (FQPA) of 1996. Under FFDCA, EPA must make a determination that pesticide residues remaining in or on food are ''safe''; that is, ''that there is reasonable certainty that no harm will result from aggregate exposure to the pesticide chemical residue'' from dietary and other sources. In determining allowable levels of pesticide residues in food, EPA must perform a more comprehensive assessment of each pesticide's risks, considering:

- Aggregate exposure (from food, drinking water, and residential uses).
- Cumulative effects from all pesticides sharing a common mechanism of toxicity.
- Possible increased susceptibility of infants and children; and
- Possible endocrine or estrogenic effects.

As amended by FQPA, FFDCA requires the reassessment of all existing tolerances (pesticide residue limits in food) and tolerance exemptions within 10 years, to ensure that they meet the safety standard of the law. EPA was directed to give priority to the review of those pesticides that appear to pose the greatest risk to public health, and to reassess 33% of the 9,721 existing tolerances and exemptions within 3 years (by August 3, 1999), 66% within 6 years (by August 3, 2002), and 100% in 10 years (by August 3, 2006). (Note: Although the total number of tolerances existing on August 3, 1996, and subject to FQPA reassessment was initially reported as 9,728, that number has been corrected to 9,721, based on the Agency's Tolerance Reassessment Tracking System.)

EPA is meeting the FFDCA's tolerance reassessment requirements through reregistration and several other program activities. In making reregistration eligibility decisions, the Agency also is completing much of tolerance reassessment, which is helping us meet the time frames mandated by the new law. EPA reassessed the first 33% of all food tolerances by August 3, 1999, and the second 33% of all food tolerances by August 3, 2002. EPA is focusing particularly on priority Group 1 pesticides, those identified as posing the greatest potential risks. Over half of the universe of tolerances to be reassessed are included in this category, including tolerances for the organophosphate (OP) pesticides, the Agency's highest priority for review. Carbamate, organochlorine, and B2 (probable human) carcinogen pesticides also are included in priority Group 1. Although EPA is directing most of its resources toward this group, a number of Group 1 pesticides will nevertheless be reassessed in the third 33% owing to the challenging issues they present. EPA's approach to tolerance reassessment under FFDCA, including the three priority Groups, is described fully in the Agency's document, ''Raw and Processed Food Schedule for Pesticide Tolerance Reassessment'' (62 FR 42020, August 4, 1997) (FRL–5734–6). In conducting the pesticide reregistration and tolerance reassessment programs at present, EPA is developing measures that show results in terms of outcomes, as well as traditional outputs, as directed by OMB.

III. FQPA and Program Accountability

One of the hallmarks of the FQPA amendments to the FFDCA is enhanced accountability. Through this summary of performance measures and goals for pesticide reregistration, tolerance reassessment, and expedited registration, EPA describes progress made during the past year in each of the program areas included in FIFRA section 4(l).

A. Status of Reregistration

During fiscal year (FY) 2002 (from October 1, 2001, through September 30, 2002), EPA made significant progress in completing risk assessments and risk management decisions for the OP pesticides, the Agency's highest priority chemicals for reregistration and tolerance reassessment, and for other pesticides. See Table 1.

TABLE 1.—REREGISTRATION/RISK MANAGEMENT DECISIONS COMPLETED: FY 2002 AND TOTAL

FY 2002: 36 Decisions	Total, End of FY 2002
7 REDs 1,4-Bis(bromoacetoxy)-2-butene Endosulfan[1] Fenamiphos (Voluntary Cancellation)[2] (HOCH2-)methyldithiocarbamate (Voluntary Cancellation) Lindane[1] Oxyfluorfen Thiabendazole	214 REDs
8 IREDs Azinphos-methyl[1,2] Diazinon[1,2] Dicrotophos[2] Disulfoton[2] Methamidophos[2] Naled[2] Oxydemeton-methyl[2] Phosmet[1,2]	21 IREDs

TABLE 1.—REREGISTRATION/RISK MANAGEMENT DECISIONS COMPLETED: FY 2002 AND TOTAL—Continued

FY 2002: 36 Decisions	Total, End of FY 2002
21 TREDs Asulam Calcium hypochlorite Chlorine gas Chlorpropham Difenzoquat Diquat dibromide Diuron (RED to be completed in FY 2003) Fenarimol Fenbutatin-oxide Hexazinone Imazalil (RED to be completed in FY 2003) Linuron Metolachlor Norflurazon Primisulfuron-methyl Pronamide Propanil (RED to be completed in FY 2003) Sodium hypochlorite Tebuthiuron Tetrachlorvinphos[2] Urea	32 TREDs

[1]Subject to NRDC consent decree
[2]Organophosphate (OP) pesticide

The Agency's decisions are embodied in Reregistration Eligibility Decision (RED) documents, Interim Reregistration Eligibility Decisions (IREDs), or Reports on FQPA Tolerance Reassessment Progress and Interim Risk Management Decisions (TREDs).

1. *REDs.* Through the reregistration program, EPA is reviewing current scientific data for older pesticides (those initially registered before November 1984), reassessing their effects on human health and the environment, and requiring risk mitigation measures as necessary. Pesticides that have sufficient supporting data and whose risks can be successfully mitigated may be declared ''eligible'' for reregistration. EPA presents these pesticide findings in a RED document.

i. *Overall RED progress.* EPA's overall progress at the end of FY 2002 in completing Reregistration Eligibility Decisions (REDs) is summarized in Table 2.

TABLE 2.—OVERALL RED PROGRESS, END OF FY 2002

REDs completed	214 (35%)
Cases canceled	231 (38%)
REDs to be completed	167 (27%)
Total reregistration cases	612 (100%)

ii. *Profile of completed REDs.* A profile of the 214 REDs completed by the end of FY 2002 is presented in Table 3.

TABLE 3.—PROFILE OF 214 REDS COMPLETED, END OF FY 2002

Pesticide active ingredients	313
Pesticide products	8,600+
REDs with food uses	107
Post-FQPA REDs	73
Post-FQPA REDs with food uses	54
Tolerance reassessments completed for post-FQPA REDs*	1,322

*EPA is revisiting tolerances associated with the 53 food use REDs that were completed before FQPA was enacted to ensure that they meet the safety standard of the new law, as set forth in the Agency's August 4, 1997, Schedule for Pesticide Tolerance Reassessment.

iii. *Risk reduction in REDs.* Reducing pesticide risks is an important aspect of the reregistration program. In developing REDs, EPA works with stakeholders including pesticide registrants, growers and other pesticide users, and environmental and public health interests, as well as the States, USDA, and other Federal agencies and others to develop voluntary measures or regulatory controls needed to effectively reduce risks of concern. Almost every RED includes some measures or modifications to reduce risks. The options for such risk reduction are extensive and include voluntary cancellation of pesticide products or deletion of uses; declaring certain uses ineligible or not yet eligible (and then proceeding with follow-up action to cancel the uses or require additional supporting data); restricting use of products to certified applicators; limiting the amount or frequency of use; improving use directions and precautions; adding more protective clothing and equipment requirements; requiring special packaging or engineering controls; requiring no-treatment buffer zones; employing ground water, surface water, or other environmental and ecological safeguards; and other measures.

2. *Interim REDs or IREDs.* EPA issues IREDs for pesticides that are undergoing reregistration, require a reregistration eligibility decision, and also must be included in a cumulative assessment under FQPA because they are part of a group of pesticides that share a common mechanism of toxicity. An IRED is issued for each individual pesticide in the cumulative group when EPA completes the pesticide's risk assessment and interim risk management decision. An IRED may include measures to reduce food, drinking water, residential, occupational, and/or ecological risks, to gain the benefit of these changes before the final RED can be issued following the Agency's consideration of cumulative risks. For example, EPA generally does not consider individual

OP or N-methyl carbamate pesticide decisions to be completed REDs or tolerance reassessments. Instead, the Agency is issuing IREDs for these chemicals at this time. EPA will make final decisions and may issue REDs for these pesticides when the cumulative risks of the OPs or carbamates have been considered. Once the Agency completes a cumulative evaluation of the OPs, final decisions will be made and REDs may be issued for the 24 OP pesticides that initially had IREDs.

3. *Tolerance reassessment ''TREDs.''* EPA issues Reports on FFDCA Tolerance Reassessment Progress and Interim Risk Management Decisions, known as TREDs, for pesticides that require tolerance reassessment decisions under FFDCA, but do not require a reregistration eligibility decision at present because:

- The pesticide was first registered after November 1984 and is considered a ''new'' active ingredient, not subject to reregistration (e.g., fenarimol and primisulfuron-methyl in FY 2002);
- EPA completed a RED for the pesticide before FQPA was enacted (most FY 2002 TREDs are in this post-RED category); or
- The pesticide is not registered for use in the U.S. but tolerances are established that allow crops treated with the pesticide to be imported from other countries (e.g., mevinphos).

During FY 2002, EPA also completed TREDs for three pesticides (diuron, imazalil, and propanil) whose REDs are under development. The Agency expects to complete REDs for these pesticides in FY 2003.

As with IREDs, EPA will not take final action on pesticides subject to TREDs that are part of a cumulative group until cumulative risks have been considered for the group.

4. *Goals for FY 2003 and future years.* EPA's major pesticide reregistration and tolerance reassessment goals for FY 2003 and future years are as follows. In addition to achieving these traditional output-oriented goals, EPA also is working to develop measures that show results in terms of outcomes, as directed by OMB.

i. *Complete individual pesticide risk management decisions.* EPA's goal in conducting the reregistration and tolerance reassessment program is to complete 20–35 Reregistration Eligibility Decisions (REDs) and Interim REDs each year during fiscal years 2003 through 2006, giving priority to pesticides with associated tolerances. Candidate pesticides for these decisions are listed near the end of this document.

ii. *Evaluate OP and other cumulative risks.* EPA began developing methods for cumulative risk assessment and the components of a cumulative risk assessment for the OP pesticides soon after FQPA was enacted in August 1996, although the Agency had begun considering this approach earlier, when it was recommended by NAS in their 1993 report, ''Pesticides in the Diets of Infants and Children.'' These efforts came to fruition in FY 2002. In addition to completing most of the remaining risk assessments and risk management decisions for individual OP pesticides, EPA issued the preliminary OP cumulative risk assessment in December 2001. After considering public comment, stakeholder input, and the results of additional scientific review, EPA issued a revised OP cumulative risk assessment in June 2002 and has begun risk management actions based on this revised assessment. The Agency plans to review public and SAP comments on the revised cumulative risk assessment as well as examine newly submitted data in further evaluating OP cumulative risks during 2003. The Agency then may issue final reregistration eligibility and tolerance reassessment decisions for individual OP pesticides with IREDs and TREDs. Consideration of the cumulative risks of N-methylcarbamates, chloroacetanilides, and perhaps other common mechanism groups of pesticides will follow. For further information, see EPA's cumulative risk website, http://www.epa.gov/pesticides/cumulative/.

iii. *Complete 100% of tolerance reassessment decisions.* EPA is continuing to reassess tolerances within time frames set forth in FFDCA as amended by FQPA, giving priority to those food use pesticides that appear to pose the greatest risk. Integration of the reregistration and tolerance reassessment programs has added complexity to the reregistration process for food use pesticides. The Agency successfully reached its first two tolerance reassessment milestones by completing over 33% of all tolerance reassessment decisions by August 3, 1999, and over 66% by August 3, 2002. EPA is working toward meeting the final FQPA tolerance reassessment goal: To complete 100% of all required tolerance reassessment decisions by August 3, 2006.

B. Product Reregistration; Numbers of Products Reregistered, Canceled, and Amended

At the end of the reregistration process, after EPA has issued a RED and declared a pesticide reregistration case eligible for reregistration, individual end-use products that contain pesticide active ingredients included in the case still must be reregistered. This concluding part of the reregistration process is called ''product reregistration.''

In issuing a completed RED document, EPA sends registrants a Data Call-In (DCI) notice requesting any product-specific data and specific revised labeling needed to make final reregistration decisions for each of the individual pesticide products covered by the RED. Based on the results of EPA's review of these data and labeling, products found to meet FIFRA and FFDCA standards may be reregistered.

A variety of outcomes are possible for pesticide products completing this final phase of the reregistration process. Ideally, in response to the DCI notice accompanying the RED document, the pesticide producer, or registrant, will submit the required product-specific data and revised labeling, which EPA will review and find acceptable. At that point, the Agency may reregister the pesticide product. If, however, the product contains multiple active ingredients, the Agency instead issues an amendment to the product's registration, incorporating the labeling changes specified in the RED; a product with multiple active ingredients may not be fully reregistered until the last active ingredient in its formulation is eligible for reregistration. In other situations, the Agency may temporarily suspend a product's registration if the registrant has not submitted required product-specific studies within the time frame specified. The Agency may cancel a product's registration because the registrant did not pay the required registration maintenance fee. Alternatively, the registrant may request a voluntary cancellation of their end-use product registration.

1. *Product reregistration actions in FY 2002.* EPA counts each of the post-RED product outcomes described above as a product reregistration action. A single pesticide product may be the subject of several product reregistration actions within the same year. For example, a product's registration initially may be amended, then the product may be reregistered, and later the product may be voluntarily canceled, all within the same year. During FY 2002, EPA completed the product reregistration actions detailed in Table 4. The program's goal is to complete 400–450 product reregistration actions in FY 2003.

TABLE 4.—PRODUCT REREGISTRATION ACTIONS COMPLETED DURING FY 2002

Product reregistration actions	77
Product amendment actions	51
Product cancellation actions	186
Total actions	314

2. *Status of the product reregistration universe.* The status of the universe of pesticide products subject to reregistration at the end of FY 2002 is shown in Table 5 below. This overall status information is not ''cumulative''--it is not derived from summing up a series of annual actions. Adding annual actions would result in a larger overall number since each individual product is subject to multiple actions--it can be amended, reregistered, and/or canceled, over time. Instead, the ''big picture'' status information in Table 5 should be considered a snapshot in time. As registrants and EPA make marketing and regulatory decisions in the future, the status of individual products may change, and numbers in this table are expected to fluctuate.

TABLE 5.—STATUS OF THE UNIVERSE OF PRODUCTS SUBJECT TO PRODUCT REREGISTRATION, FOR FY 2002 (AS OF SEPTEMBER 30, 2002)

Products reregistered	1,637
Products amended	345
Products canceled	3,806
Products sent for suspension	12
Total products with actions completed	5,800
Products with actions pending	2,817
Total products in product reregistration universe	8,617

The universe of 8,617 products in product reregistration at the end of FY 2002 represented an increase of 745 products from the FY 2001 universe of 7,872 products. The increase consists of 324 products associated with FY 2002 REDs, and 412 products associated with IREDs, plus 9 products that were added as a result of DCI activities and processing for several previously issued REDs and IREDs.

At the end of FY 2002, 2,817 products had product reregistration decisions pending. Some pending products await science reviews, label reviews, or reregistration decisions by EPA. Others are not yet ready for product reregistration actions; they are associated with more recently completed REDs, and their product-specific data are not yet due to be submitted to or reviewed by the Agency. EPA's goal is to complete 400–450 product reregistration actions during fiscal year 2003.

C. Number and Type of DCIs to Support Product Reregistration by Active Ingredient

1. *DCIs for REDs.* The number and type of data call-in requests or DCIs that EPA is preparing to issue under FIFRA section 3(c)(2)(B) to support product reregistration for pesticide active ingredients included in FY 2002 REDs are shown in Table 6. Starting in FY 2001, for the first time, OMB clearance has been required to issue REDs and IREDs. Since the Fenamiphos and (HOCH2-)methyldithiocarbamate REDs consisted of voluntary cancellations, products containing these pesticides will not be reregistered and therefore do not require DCIs.

TABLE 6.—DCIS PREPARED TO SUPPORT PRODUCT REREGISTRATION FOR FY 2002 REDS

Case Number	Case Name	Number of Products Covered by the RED[1]	Number of Product Chemistry Studies Required[2]	Number of Acute Toxicology Studies Required[3]	Number of Efficacy Studies Required
3030	1,4-Bis(bromoacetoxy)-2-butene	2	22	12 (6 studies x 2 products)	--
0014	Endosulfan	98 (includes 4 SLN products)	22	102 (7 batches/10 not batched)	0
0333	Fenamiphos (Voluntary Cancellation)	15	N/A	N/A	N/A
3076	(HOCH2-) methyldithiocarbamate (Voluntary Cancellation)	0	N/A	N/A	N/A
0315	Lindane	29	22	126 (5 batches/16 not batched)	0
2490	Oxyfluorfen	117 (includes 8 SLN products)	22	60 (4 batches/6 not batched)	0
2670	Thiabendazole	63	22	144 (4 batches/20 not batched)	0

[1]The number of registered products containing a pesticide active ingredient can change over time. The number of products that appears in the RED document (counted when the RED is signed) may be different than the number of products that EPA is tracking for product reregistration (counted later, when the RED is issued). This table reflects the final number of products associated with each RED, as they are being tracked for product reregistration.

[2]This column shows the number of product chemistry studies that are required for each product covered by the RED.

[3]In an effort to reduce the time, resources, and number of animals needed to fulfill acute toxicity data requirements, EPA ''batches'' products that can be considered similar from an acute toxicity standpoint. For example, one batch could contain five products. In this instance, if six acute toxicology studies usually were required per product, only six studies (rather than 30 studies) would be required for the entire batch. Factors considered in the sorting process include each product's active and inert ingredients (e.g., identity, percent composition, and biological activity), type of formulation (e.g., emulsifiable concentrate, aerosol, wettable powder, granular), and labeling (e.g., signal word, use classification, precautionary labeling). The Agency does not describe batched products as ''substantially similar,'' because all products within a batch may not be considered chemically similar or have identical use patterns.

2. *DCIs for IREDs*. The number and type of data requests or DCIs that EPA is preparing to issue to support product reregistration for pesticide active ingredients included in FY 2002 Interim REDs (IREDs) are shown in Table 7.

TABLE 7.—DCIS PREPARED TO SUPPORT PRODUCT REREGISTRATION FOR FY 2002 IREDS

Case Number	Case Name	Number of Products Covered by the IRED	Number of Product Chemistry Studies Required	Number of Acute Toxicology Studies Required	Number of Efficacy Studies Required
0235	Azinphos-methyl	24	22	54 (4 batches/5 not batched)	0
0238	Diazinon	182	22	186 (15 batches/16 not batched)	0
0145	Dicrotophos	3	22	6 (1 batch)	--
0102	Disulfoton	62	22	114 (4 batches/15 not batched)	0
0043	Methamidophos	47	22	24 (1 batch/3 not batched)	0
0092	Naled	35	22	78 (2 batches/11 not batched)	2
0258	Oxydemeton-methyl	19 (includes 2 SLN products)	22	12 (2 batches)	0
0242	Phosmet	40	22	42 (6 batches/1 not batched)	2

Note: FIFRA section 24(c) or Special Local Need (SLN) registrations are not included in acute toxicity batchings because they are supported by a valid parent product (section 3) registration.

3. *DCIs not needed for TREDs*. The Agency does not issue product-specific data requests or DCIs for pesticides included in tolerance reassessment decisions or TREDs because, at present, these pesticides do not require product reregistration decisions; they are subject to tolerance reassessment only.

D. Progress in Reducing the Number of Unreviewed, Required Reregistration Studies

EPA is making progress in reviewing scientific studies submitted by pesticide registrants in support of pesticides undergoing reregistration. See Table 8.

TABLE 8.—REVIEW STATUS OF STUDIES SUBMITTED FOR PESTICIDE REREGISTRATION, END OF FY 2002

Pesticide Reregistration Group or List, per FIFRA Section 4(c)(2)	Studies Reviewed + Extraneous[1]	Studies Awaiting Review	Total Studies Received
List A	11,237 + 470 = 11,707 (84%)	2,201 (16%)	13,908
List B	6,453 + 746 = 7,199 (75%)	2,408 (25%)	9,607
List C	2,271 + 239 = 2,510 (73%)	938 (27%)	3,448
List D	1,342 + 94 = 1,436 (82%)	308 (18%)	1,744
Total Lists A - D	21,303 + 1,549 = 22,852 (80%)	5,855 (20%)	28,707

[1]Extraneous studies is a term used to classify those studies that are not needed because the guideline or data requirement has been satisfied by other studies or has changed.

Studies reviewed by EPA increased (or the study review ''backlog'' decreased) during FY 2002. At the end of the fiscal year, over 80% of all studies received by the Agency in support of reregistration had been reviewed, compared to 79% at the end of FY 2001. During FY 2002, the Agency continued an effort to clean up the data base used to track the review status of studies submitted for reregistration. The percent of studies reviewed should continue to increase in future years.

E. Aggregate Status of Tolerances Reassessed

During FY 2002, EPA completed 2,649 tolerance reassessments and ended the fiscal year with a total of 6,499 tolerance reassessment decisions to date, addressing almost 67% of the 9,721 tolerances that require reassessment (See Table 9). Over 60% of the tolerance reassessment decisions completed were for pesticides in priority Group 1.

Just as EPA reassessed over 33% of all food tolerances by August 3, 1999, including many tolerances for pesticides identified as posing the greatest potential risks, the Agency also met the next FQPA goal during FY 2002 and completed over 66% of all required tolerance reassessment decisions by August 3, 2002. EPA's general schedule for tolerance reassessment (**Federal Register**, August 4, 1997) identified three groups of pesticides to be reviewed; this grouping continues to reflect the Agency's overall scheduling priorities. In completing tolerance reassessment, EPA continues to give priority to pesticides in Group 1.

1. *Aggregate accomplishments through reregistration and other programs*. EPA is accomplishing tolerance reassessment through the registration and reregistration programs; by revoking tolerances for pesticides that have been canceled (many as a result of reregistration); by reevaluating pesticides with pre-FQPA REDs, and through other decisions not directly related to registration or reregistration, described further below. EPA is using the Tolerance Reassessment Tracking System (TORTS) to compile this updated information and report on the status of tolerance reassessment (See Table 9).

TABLE 9.—TOLERANCE REASSESSMENTS COMPLETED POST-FQPA BY FISCAL YEAR, THROUGH FY 2002

Tolerances Reassessed Through...	During Late FY 96	During FY 1997	During FY 1998	During FY 1999	During FY 2000	During FY 2001	During FY 2002	Total, End of FY 2002
Reregistration/REDs	25	339	278	359	44	46	231	1,322
Tolerance Reassessments/TREDs	--	--	--	--	--	--	776	776
Registration	0	221	308	341	55	215	200	1,340
Tolerance revocations	3	0	812	513	22	35	545	1,930
Other decisions	0	1	0	233	0	0	897	1,131
Total tolerances reassessed	28	561	1,398	1,446	121	296	2,649	6,499

i. *Reregistration/REDs*. EPA is using the reregistration program to accomplish much of tolerance reassessment. For each of the tolerance reassessment decisions made through REDs since FQPA, the Agency has made the finding as to whether there is a reasonable certainty of no harm, as required by FFDCA. Many tolerances reassessed through reregistration remain the same while others may be raised, lowered, or revoked.

ii. *Tolerance reassessments/TREDs*. Tolerances initially evaluated through REDs that were completed before FQPA was enacted in August 1996 now are being reassessed to ensure that they meet the new FFDCA safety standard. EPA issues these post-RED tolerance reassessment decisions as TREDs. The Agency also issues TREDs summarizing tolerance reassessment decisions for some developing REDs, for new pesticide active ingredients not subject to reregistration, and for pesticides with import tolerances only. Tolerance reassessments in TREDs for pesticides that are not part of a cumulative group (i.e., pesticides that are not OPs or carbamates) may be counted at present and are included in the FY 2002 accomplishments. In completing OP IREDs and TREDs during FY 2002, the Agency also completed tolerance reassessment decisions for these pesticides. Many of these tolerance reassessments will not become final, however, until EPA completes a cumulative evaluation of the OPs.

iii. *Registration*. Like older pesticides, all new pesticide registrations must meet the safety standard of FFDCA. Many of the registration applications EPA receives are for new uses of pesticides already registered for other uses. To reach a decision on a proposed new food use of an already registered pesticide, EPA must reassess the existing tolerances, as well as the proposed new tolerances, to make sure there is reasonable certainty that no harm will result to the public from aggregate exposure from all uses. During FY 2002, the Agency has continued to discourage submission of applications and petitions for any new uses of the OP pesticides, given the need to consider cumulative risks from OP's as a group before any new uses can be fully evaluated.

iv. *Tolerance revocations*. Revoked tolerances represent uses of many different pesticide active ingredients that have been canceled in the past. Some pesticides were canceled due to the Agency's risk concerns. Others were canceled voluntarily by their manufacturers, based on lack of support for reregistration. Tolerance revocations are important even if there are no domestic uses of a pesticide because residues in or on imported commodities treated with the chemical could still present dietary risks that may exceed the FFDCA ''reasonable certainty of no harm'' standard, either individually or cumulatively with other substances that share a common mechanism of toxicity.

v. *Other reassessment decisions*. In addition to the types of reassessment actions described above, a total of 1,131 additional tolerance reassessment decisions have been made, not directly related to registration or reregistration. A list of these other tolerance reassessment decisions with their **Federal Register** citations is available in the docket for this **Federal Register** notice.

2. *Accomplishments for priority pesticides*. During FY 2002, EPA completed tolerance reassessment decisions for many high priority pesticides in review, including OPs, carbamates, organochlorines, and carcinogens. (See Table 10.)

TABLE 10.—TOLERANCE REASSESSMENTS COMPLETED FOR PRIORITY PESTICIDES

Pesticide Class	Tolerances to be Reassessed	Reassessed by End of FY 2002
Organophosphates	1,691	1,127 (66.65%)
Carbamates	545	303 (55.6%)
Organochlorines	253	253 (100%)
Carcinogens	2,008	1,278 (63.65%)
High hazard inerts	5	3 (60%)
Other	5,219	--
Total	9,721	6,499 (66.86%)

3. *Tolerance reassessment and the organophosphates*. EPA has developed an approach for assessing cumulative risk for the OPs as a group, as required by FFDCA, and applied this methodology in conducting the OP cumulative risk assessment during FY 2002. The Agency presented a comprehensive guidance document on cumulative risk assessment to the Scientific Advisory Panel in December 1999, issued draft guidance in 2000 for review and comment, and presented a case study on cumulative risk assessment to the SAP in December 2000. In 2001, EPA refined the methodology and began developing components of the OP cumulative preliminary risk assessment. With input from the Committee to Advise on Reassessment and Transition (CARAT) workgroup, the Agency developed a process to inform stakeholders and encourage their participation during the assessment of OP cumulative risks. At CARAT's recommendation, EPA held a series of technical briefings to explain and answer questions about the Agency's methods for assessing OP cumulative hazard, as well as exposure through drinking water, food, and in residential settings. An EPA website was established to share updated information on pesticide cumulative risk assessment with the public (http://www.epa.gov/pesticides/cumulative). In FY 2002, the Agency issued a preliminary OP cumulative risk assessment on December 3, 2001, and issued a revised OP cumulative risk assessment on June 10, 2002, both for public comment.

Through this assessment of the OP pesticides, EPA has evaluated 1,127 OP tolerances and found that most require no modification to meet the new FFDCA safety standard. The Agency's regulatory actions on individual OP pesticides during the past few years have substantially reduced the risks of these pesticides. The OP cumulative assessment strongly supports the Agency's confidence that the U.S. has one of the safest food supplies in the world.

Most of the reregistration and tolerance reassessment decisions that EPA is making for the OP pesticides at present will not be considered final until after the Agency completes its cumulative evaluation of the OPs. The results of individual OP assessments (IRED and TRED documents) include significant risk mitigation measures, however, and any resulting tolerance revocations are counted as completed tolerance reassessments. In addition, some OP tolerances make at most a minimal or negligible contribution to the cumulative risk from OP pesticides; these tolerances also were counted as reassessed during FY 2002. Once EPA completes a cumulative evaluation of the OPs, the Agency will reconsider individual OP IREDs and TREDs, and may issue final REDs and tolerance reassessments for these pesticides.

4. *Status of individual OP decisions*. The status of each of the 49 known OP pesticides at the end of FY 2002 is reflected in this discussion.

i. *OP decisions completed*. During FY 2002, through the public participation process, EPA completed risk assessments and made individual risk management decisions for 10 OP pesticides, bringing the number of OPs with individual decisions completed to 35 (See List 1).

List 1.—OP Pesticides with Individual Decisions Completed (35), End of FY 2002

20 IREDs

Acephate
Azinphos-methyl
Bensulide
Chlorpyrifos
Diazinon
Dicrotophos
Disulfoton
Ethoprop
Fenthion
Methamidophos
Methidathion
Naled
Oxydemeton-methyl
Phorate
Phosmet
Pirimiphos methyl
Profenofos
Propetamphos
Terbufos
Tribufos (DEF)

10 TREDs

Cadusafos
Chlorethoxyfos
Chlorpyrifos methyl
Coumaphos
Fenitrothion
Mevinphos
Phosalone
Phostebupirim
Tetrachlorvinphos
Trichlorfon

5 REDs

Ethion
Ethyl parathion
Fenamiphos
Sulfotepp
Temephos

ii. *OP decisions pending*. Four other OP pesticides had completed most or all earlier phases of the public participation process and were awaiting individual decisions at the end of FY 2002. EPA plans to complete individual risk management decisions for these 4 pesticides during FY 2003 (See List 2).

List 2.—OP Pesticides with Individual Decisions Pending (4), End of FY 2002

Dichlorvos (DDVP)
Dimethoate
Malathion
Methyl parathion

iii. *Early OP cancellations*. Ten OP pesticides were canceled prior to or early in the pilot public participation process (See List 3).

List 3.—OPs Canceled Prior to/Early in the Pilot Public Participation Process (10)

Chlorfenvinphos
Chlorthiophos

Dialifor
Dioxathion
Fonofos
Isazophos
Isofenphos
Monocrotophos
Phosphamidon
Sulprofos

F. Applications for Registration Requiring Expedited Processing; Numbers Approved and Disapproved

By law, EPA must expedite its processing of certain types of applications for pesticide product registration, i.e., applications for end use products that would be identical or substantially similar to a currently registered product; amendments to current product registrations that do not require review of scientific data; and products for public health pesticide uses. During FY 2002, EPA considered and approved the numbers of applications for registration requiring expedited processing (also known as ''fast track'' applications) shown in Table 11.

TABLE 11.—FAST TRACK APPLICATIONS APPROVED IN FY 2002

Me-too product registrations/Fast track	368
Amendments/Fast track	3,466
Total applications processed by expedited means	3,834

Regarding numbers of applications disapproved, instead the Agency generally notifies the registrant of any deficiencies in the application that need to be corrected or addressed before the application can be approved. Applications may have been withdrawn after discussions with the Agency, but none were formally ''disapproved'' during FY 2002.

On a financial accounting basis, EPA devoted approximately 28.7 full-time equivalents (FTEs) in FY 2002 to reviewing and processing applications for fast track me-too product registrations and label amendments. The Agency spent approximately $2.87 million in FY 2002 in direct costs (i.e., time on task, not including administrative expenses, computer systems, management overhead, and other indirect costs) on expedited processing and reviews.

G. Future Schedule for Reregistrations

During the past several years, EPA has been conducting reregistration in conjunction with tolerance reassessment under FFDCA. That law requires the Agency to reassess all existing tolerances over a 10–year period to ensure consistency with the new safety standard, and to consider pesticides that appear to pose the greatest risk first. In prioritizing pesticides for reregistration eligibility review and tolerance reassessment, EPA is continuing to consider their potential risks, as reflected in the Agency's tolerance reassessment schedule published in the **Federal Register** on August 4, 1997. EPA is giving highest priority to pesticides in Group 1, including the OP pesticides, and the carbamates, organochlorines, and B2 (probable human) carcinogens.

1. *RED, IRED, and TRED Candidate Pesticides for FY 2003.* List 4 contains candidate pesticides for Reregistration Eligibility Decisions (REDs), Interim REDs (IREDs), and Reports on FQPA Tolerance Reassessment Progress and Interim Risk Management Decisions (TREDs) in FY 2003. As in previous years, any pesticides for which decisions are not completed during FY 2003 will automatically become candidates for decisions in FY 2004.

List 4.—FY 2003 RED, IRED, and TRED Candidate Pesticides

REDs
Chlorsulfuron
Chromated copper arsenate (CCA)
Coal tar/Creosote
Dihalodialkylhydantoins
Dinocap
Diuron
Ethoxyquin
Imazalil
MGK-326
Molinate
Oxadiazon
Pentachlorophenol
Poly(hexamethylenebiguanide) (PHMB)
Propanil
Thiophanate-methyl (completed 3–28–03)
Zinc omadine
Ziram

IREDs
Atrazine (completed 1–31–03)
Carbaryl (due 6–30–03)
Dichlorvos (DDVP)
Dimethoate
Malathion
Methyl parathion

TREDs
4-CPA (completed 4–3–03)
Dacthal (DCPA)
Ethephon
Fenridazon potassium
Potassium bromide

2. *RED, IRED, and TRED Candidate Pesticides for FY 2004.* The pesticides that are in the pipeline for RED, IRED, and TRED decisions in FY 2004 are included in List 5.

List 5.—FY 2004 RED, IRED, and TRED Candidate Pesticides

REDs
2,4-D
2,4-DB
Azadioxabicyclo-octane
Benfluralin
Benzisothiazolin-3-one (BIT)
Bioban P-1487
Busan 77
Cacodylic acid/DSMA/MSMA
Carboxin
Cycloate
Cypermethrin
Fenvalerate
Formaldehyde
Mancozeb
Maneb
MCPA
Metiram
PCNB
Sodium acifluorfen
Sodium fluoride
Thiram
Trichloromelamine
Triethylene glycol

IREDs
Aldicarb
Atrazine revised IRED (due 10–31–03)
Carbofuran
Formetanate HCl

TREDs
Amitraz
Ethylene glycol monobutyl ether
Fluazifop butyl
Lactofen
Oryzalin
Sodium xylenesulfonate
Sulfonated oleic acid, sodium salt
Trifluralin

H. Projected Year of Completion of Reregistrations

EPA is now conducting reregistration in conjunction with tolerance reassessment, which FFDCA mandates be completed by August 2006. EPA plans to complete reregistration of pesticide active ingredients with tolerances and as many others as possible in meeting the statutory deadline for completing tolerance reassessment.

List of Subjects

Environmental protection, Pesticides and pests.

Dated: July 11, 2003.

Stephen L. Johnson,

Assistant Administrator, Office of Prevention, Pesticides and Toxic Substances.

[FR Doc. 03–19353 Filed 7–29–03; 8:45 am]

BILLING CODE 6560–50–S

ENVIRONMENTAL PROTECTION AGENCY

[OPP–2003–0223; FRL–7315–7]

6-Benzyladenine; Notice of Filing a Pesticide Petition to Establish a Tolerance for a Certain Pesticide Chemical in or on Food

AGENCY: Environmental Protection Agency (EPA).

ACTION: Notice.

SUMMARY: This notice announces the initial filing of a pesticide petition proposing the establishment of regulations for residues of a certain pesticide chemical in or on various food commodities.

DATES: Comments, identified by docket identification (ID) number OPP–2003–0223, must be received on or before August 29, 2003.

ADDRESSES: Comments may be submitted electronically, by mail, or through hand delivery/courier. Follow the detailed instructions as provided in Unit I. of the **SUPPLEMENTARY INFORMATION**.

FOR FURTHER INFORMATION CONTACT: Denise Greenway, Biopesticides and Pollution Prevention Division (7511C), Office of Pesticide Programs, Environmental Protection Agency, 1200 Pennsylvania Ave., NW., Washington, DC 20460–0001; telephone number: (703) 308–8263; e-mail address: *greenway.denise@epa.gov*.

SUPPLEMENTARY INFORMATION:

I. General Information

A. Does this Action Apply to Me?

You may be potentially affected by this action if you are an agricultural producer, food manufacturer, or pesticide manufacturer. Potentially affected entities may include, but are not limited to:

- Crop production (NAICS 111)
- Animal production (NAICS 112)
- Food manufacturing (NAICS 311)
- Pesticide manufacturing (NAICS 32532)

This listing is not intended to be exhaustive, but rather provides a guide for readers regarding entities likely to be affected by this action. Other types of entities not listed in this unit could also be affected. The North American Industrial Classification System (NAICS) codes have been provided to assist you and others in determining whether this action might apply to certain entities. If you have any questions regarding the applicability of this action to a particular entity, consult the person listed under **FOR FURTHER INFORMATION CONTACT**.

B. How Can I Get Copies of this Document and Other Related Information?

1. *Docket*. EPA has established an official public docket for this action under docket ID number OPP–2003–0223. The official public docket consists of the documents specifically referenced in this action, any public comments received, and other information related to this action. Although a part of the official docket, the public docket does not include Confidential Business Information (CBI) or other information whose disclosure is restricted by statute. The official public docket is the collection of materials that is available for public viewing at the Public Information and Records Integrity Branch (PIRIB), Rm. 119, Crystal Mall #2, 1921 Jefferson Davis Hwy., Arlington, VA. This docket facility is open from 8:30 a.m. to 4 p.m., Monday through Friday, excluding legal holidays. The docket telephone number is (703) 305–5805.

2. *Electronic access*. You may access this **Federal Register** document electronically through the EPA Internet under the ''**Federal Register**'' listings at *http://www.epa.gov/fedrgstr/*.

An electronic version of the public docket is available through EPA's electronic public docket and comment system, EPA Dockets. You may use EPA Dockets at *http://www.epa.gov/edocket/* to submit or view public comments, access the index listing of the contents of the official public docket, and to access those documents in the public docket that are available electronically. Although not all docket materials may be available electronically, you may still access any of the publicly available docket materials through the docket facility identified in Unit I.B.1. Once in the system, select ''search,'' then key in the appropriate docket ID number.

Certain types of information will not be placed in EPA's Dockets. Information claimed as CBI and other information whose disclosure is restricted by statute, which is not included in the official public docket, will not be available for public viewing in EPA's electronic public docket. EPA's policy is that copyrighted material will not be placed in EPA's electronic public docket but will be available only in printed, paper form in the official public docket. To the extent feasible, publicly available docket materials will be made available in EPA's electronic public docket. When a document is selected from the index list in EPA Dockets, the system will identify whether the document is available for viewing in EPA's electronic public docket. Although not all docket materials may be available electronically, you may still access any of the publicly available docket materials through the docket facility identified in Unit I.B.1. EPA intends to work towards providing electronic access to all of the publicly available docket materials through EPA's electronic public docket.

For public commenters, it is important to note that EPA's policy is that public comments, whether submitted electronically or in paper, will be made available for public viewing in EPA's electronic public docket as EPA receives them and without change, unless the comment contains copyrighted material, CBI, or other information whose disclosure is restricted by statute. When EPA identifies a comment containing copyrighted material, EPA will provide a reference to that material in the version of the comment that is placed in EPA's electronic public docket. The entire printed comment, including the copyrighted material, will be available in the public docket.

Public comments submitted on computer disks that are mailed or delivered to the docket will be transferred to EPA's electronic public docket. Public comments that are mailed or delivered to the docket will be scanned and placed in EPA's electronic public docket. Where practical, physical objects will be photographed, and the photograph will be placed in EPA's electronic public docket along with a brief description written by the docket staff.

C. How and to Whom Do I Submit Comments?

You may submit comments electronically, by mail, or through hand delivery/courier. To ensure proper receipt by EPA, identify the appropriate docket ID number in the subject line on the first page of your comment. Please ensure that your comments are submitted within the specified comment period. Comments received after the close of the comment period will be marked ''late.'' EPA is not required to consider these late comments. If you wish to submit CBI or information that is otherwise protected by statute, please follow the instructions in Unit I.D. Do not use EPA Dockets or e-mail to submit CBI or information protected by statute.

1. *Electronically*. If you submit an electronic comment as prescribed in this unit, EPA recommends that you include your name, mailing address, and an e-mail address or other contact information in the body of your comment. Also include this contact information on the outside of any disk

or CD ROM you submit, and in any cover letter accompanying the disk or CD ROM. This ensures that you can be identified as the submitter of the comment and allows EPA to contact you in case EPA cannot read your comment due to technical difficulties or needs further information on the substance of your comment. EPA's policy is that EPA will not edit your comment, and any identifying or contact information provided in the body of a comment will be included as part of the comment that is placed in the official public docket, and made available in EPA's electronic public docket. If EPA cannot read your comment due to technical difficulties and cannot contact you for clarification, EPA may not be able to consider your comment.

i. *EPA dockets*. Your use of EPA's electronic public docket to submit comments to EPA electronically is EPA's preferred method for receiving comments. Go directly to EPA Dockets at *http://www.epa.gov/edocket*, and follow the online instructions for submitting comments. Once in the system, select ''search,'' and then key in docket ID number OPP–2003–0223. The system is an ''anonymous access'' system, which means EPA will not know your identity, e-mail address, or other contact information unless you provide it in the body of your comment.

ii. *E-mail*. Comments may be sent by e-mail to *opp docket@epa.gov*, Attention: Docket ID Number OPP–2003–0223. In contrast to EPA's electronic public docket, EPA's e-mail system is not an ''anonymous access'' system. If you send an e-mail comment directly to the docket without going through EPA's electronic public docket, EPA's e-mail system automatically captures your e-mail address. E-mail addresses that are automatically captured by EPA's e-mail system are included as part of the comment that is placed in the official public docket, and made available in EPA's electronic public docket.

iii. *Disk or CD ROM*. You may submit comments on a disk or CD ROM that you mail to the mailing address identified in Unit I.C.2. These electronic submissions will be accepted in WordPerfect or ASCII file format. Avoid the use of special characters and any form of encryption.

2. *By mail*. Send your comments to: Public Information and Records Integrity Branch (PIRIB) (7502C), Office of Pesticide Programs (OPP), Environmental Protection Agency, 1200 Pennsylvania Ave., NW., Washington, DC 20460–0001, Attention: Docket ID Number OPP–2003–0223.

3. *By hand delivery or courier*. Deliver your comments to: Public Information and Records Integrity Branch (PIRIB), Office of Pesticide Programs (OPP), Environmental Protection Agency, Rm. 119, Crystal Mall #2, 1921 Jefferson Davis Hwy., Arlington, VA, Attention: Docket ID Number OPP–2003–0223. Such deliveries are only accepted during the docket's normal hours of operation as identified in Unit I.B.1.

D. How Should I Submit CBI to the Agency?

Do not submit information that you consider to be CBI electronically through EPA's electronic public docket or by e-mail. You may claim information that you submit to EPA as CBI by marking any part or all of that information as CBI (if you submit CBI on disk or CD ROM, mark the outside of the disk or CD ROM as CBI and then identify electronically within the disk or CD ROM the specific information that is CBI). Information so marked will not be disclosed except in accordance with procedures set forth in 40 CFR part 2.

In addition to one complete version of the comment that includes any information claimed as CBI, a copy of the comment that does not contain the information claimed as CBI must be submitted for inclusion in the public docket and EPA's electronic public docket. If you submit the copy that does not contain CBI on disk or CD ROM, mark the outside of the disk or CD ROM clearly that it does not contain CBI. Information not marked as CBI will be included in the public docket and EPA's electronic public docket without prior notice. If you have any questions about CBI or the procedures for claiming CBI, please consult the person listed under **FOR FURTHER INFORMATION CONTACT**.

E. What Should I Consider as I Prepare My Comments for EPA?

You may find the following suggestions helpful for preparing your comments:

1. Explain your views as clearly as possible.
2. Describe any assumptions that you used.
3. Provide copies of any technical information and/or data you used that support your views.
4. If you estimate potential burden or costs, explain how you arrived at the estimate that you provide.
5. Provide specific examples to illustrate your concerns.
6. Make sure to submit your comments by the deadline in this notice.
7. To ensure proper receipt by EPA, be sure to identify the docket ID number assigned to this action in the subject line on the first page of your response. You may also provide the name, date, and **Federal Register** citation.

II. What Action is the Agency Taking?

EPA has received a pesticide petition as follows proposing the establishment and/or amendment of regulations for residues of a certain pesticide chemical in or on various food commodities under section 408 of the Federal Food, Drug, and Cosmetic Act (FFDCA), 21 U.S.C. 346a. EPA has determined that this petition contains data or information regarding the elements set forth in FFDCA section 408(d)(2); however, EPA has not fully evaluated the sufficiency of the submitted data at this time or whether the data support granting of the petition. Additional data may be needed before EPA rules on the petition.

List of Subjects

Environmental protection, Agricultural commodities, Feed additives, Food additives, Pesticides and pests, Reporting and recordkeeping requirements.

Dated: July 16, 2003.

Janet L. Andersen,

Director, Biopesticides and Pollution Prevention Division, Office of Pesticide Programs.

Summary of Petition

The petitioner's summary of the pesticide petition is printed below as required by FFDCA section 408(d)(3). The summary of the petition was prepared by the petitioner and represents the view of the petitioner. The petition summary announces the availability of a description of the analytical methods available to EPA for the detection and measurement of the pesticide chemical residues or an explanation of why no such method is needed.

I. Valent BioSciences Corporation

PP 3F6586

EPA has received a pesticide petition (PP 3F6586) from Valent BioSciences Corporation, 870 Technology Way, Suite 100, Libertyville, IL. 60048, proposing pursuant to section 408(d) of the FFDCA, 21 U.S.C. 346a(d), to amend 40 CFR part 180 to establish an exemption from the requirement of a tolerance for the biochemical pesticide 6-benzyladenine (6-BA) in or on pistachio, and to amend the existing exemption (§180.1150) for apples to expand the uses and increase the application rate.

Valent BioSciences Corporation has submitted the following summary of

information, data, and arguments in support of their pesticide petition. This summary was prepared by Valent BioSciences Corporation and EPA has not fully evaluated the merits of the pesticide petition. The summary may have been edited by EPA if the terminology used was unclear, the summary contained extraneous material, or the summary unintentionally made the reader conclude that the findings reflected EPA's position and not the position of the petitioner.

A. Product Name and Proposed Use Practices

6-Benzyladenine is a naturally occurring plant growth regulator used on certain fruit trees and certain ornamental lily tubers. In January 1990, the Agency classified 6-BA as a biochemical pesticide because it resembles natural plant regulators and it displays a nontoxic mode of action. The new use being proposed for 6-BA is as an effective stand-alone fruitlet thinner when applied to apples in the post-bloom period at an application rate not to exceed 182 grams of active ingredient per acre per season (gram per active ingredient per acre per season). 6-Benzyladenine has also been shown to directly increase cell division of treated fruit, resulting in improvements in fruit size over what would be expected from the normal thinning effect. The frequency and timing of application will vary according to the specific growing conditions being treated. The second proposed new use is to reduce alternate bearing in pistachio and thus increase cumulative yield. The proposed maximum application rate for pistachio is 60 grams of active ingredient per acre per season.

B. Product Identity/Chemistry

1. *Identity of the pesticide and corresponding residues*. 6-Benzyladenine (*N*-(phenylmethyl)-1H-purin-6-amine) has been tested and residue data generated has been provided to EPA by Valent BioSciences Corporation.

2. *Magnitude of residue at the time of harvest and method used to determine the residue*. Trials conducted in various states (New York, Pennsylvania, Virgina, Missouri, Oregon, and Washington) and on various apple cultivars, support the proposed tolerance exemption. This data has been further supported by numerous trials carried out internationally. Residue levels following the maximum number (4) of applications on apple were very close to the limit of quantitation (LOQ) of 5 parts per billion (ppb) at normal harvest, which averaged 80 days after the last application. Trials indicate rapid degradation of 6-BA residues among all the apple varieties and geographies evaluated.

The analytical methods for detection of 6-BA in apple raw agricultural and processed commodities are comprised of extraction, cleanup on a strong cation exchange (SCX) solid-phase extraction cartridge, derivatisation and quantitation by gas chromatography (GC). These were developed by Valent BioSciences Corporation and submitted to EPA, constituting a practical analytical method for detecting and measuring levels of 6-BA in or on commodities, with a LOQ of 0.005 part per million (ppm) that allows for monitoring of food, with the residues at or above the LOQ.

Residue data on 6-BA use on pistachio has been provided to EPA by Valent BioSciences Corporation. Trials were conducted in locations representing the major pistachio production area in the United States. No residues were detected following the maximum number (2) of applications at normal harvest, which averaged 60 days after the last application.

An analytical method based on extraction, clean up and derivatisation of 6-BA followed by quantitation by GC was submitted to EPA for residue determination on pistachio. This GC method is adequate for determining residues in or on pistachios with a LOQ of 0.05 ppm.

3. *Why an analytical method for detecting and measuring the levels of the pesticide residue are not needed*. Usually, a request for an exemption from the requirement of a tolerance is not accompanied by residue data and an analytical method. Valent BioSciences Corporation has provided this information to the Agency in this case. The information demonstrates that any residue is detected at levels very close to the LOQ. Although a numeric tolerance could be established, it would be very difficult to enforce, as demonstrated by the risk characterization. Valent BioSciences Corporation proposes that the submitted residue data and analytical method support their conclusion that there is a reasonable certainty that no harm to humans or the environment will result from the use of 6-BA on apples and pistachios.

C. Mammalian Toxicological Profile

1. *Acute toxicity*. The oral LD_{50} of 6-BA is estimated by probit analysis at 1.3 gram/kilogram (g/kg) in the rat. The dermal LD_{50} in the rabbit is >5.0 g/kg. The acute inhalation LC_{50} in the rat is 5.2 milligrams/Liter (mg/L)/hour. A primary eye irritation study in the rabbit showed moderate conjunctival effects which cleared within 7 days. A dermal irritation study in the rabbit showed slight dermal irritation, which lasted for 5 days. Sensitization potential has been examined, and 6-BA (99% pure) was demonstrated not to be a dermal sensitizer in guinea pigs under conditions of the study.

2. *Genotoxicity*. Mutagenicity studies including Ames test, mouse micronucleus assay, and unscheduled DNA synthesis (UDS) assay in rat were negative for mutagenic effects.

3. *Developmental toxicity*. Developmental toxicity in rats fed 6-BA (99% pure) was manifested as significantly decreased fetal body weight, increased incidence of hydrocephalas and unossified sternbrae, incompletely ossified phalanges, and malaligned sternbrae at 175 milligrams/kilogram body weight/day (mg/kg bwt/day).

Maternal toxicity was also observed at 175 mg/kg bwt/day, which was manifested as significantly decreased body weight, weight gain, and food consumption. Thus the no observed adverse effect level (NOAEL) and lowest observed adverse effect level (LOAEL) for maternal and developmental toxicity was 50 and 175 mg/kg bwt/day, respectively.

4. *Subchronic toxicity*. 6-Benzyladenine (99% pure) fed to rats for 13 weeks produced decreased weight gain at 1,500 and 5,000 ppm (121 and 322 mg/kg bwt/day) in females, and 5,000 ppm (295 mg/kg bwt/day) in males. This decreased weight gain appeared to be related to decreased food consumption. Serum alkaline phosphatase activity and blood urea nitrogen levels were increased in both sexes receiving 5,000 ppm; thus the NOAEL was 1,500 ppm (approximately 111 mg/kg bwt/day in both sexes combined) and the LOAEL was 5,000 ppm (approximately 304 mg/kg bwt/day in both sexes), based on the decreased body weight gain, food consumption, increased blood urea nitrogen, and minimal histological changes in the kidneys.

D. Aggregate Exposure

1. *Dietary exposure*—i. *Food*. In conducting this exposure assessment, Valent BioSciences Corporation used very conservative assumptions, 100% of all commodities were assumed to be treated, and those residues would be at twice the LOQ -- which result in a large overestimate of human exposure. The analysis assumes that all residues have the same magnitude, and the treated

commodity is 100% of a daily diet. Thus, in making a safety determination for these tolerance exemptions, Valent BioSciences Corporation took into account this very conservative exposure assessment.

The last application precedes harvest by approximately 2.5 months in apples, therefore the potential for dietary exposure is considered negligible by Valent BioSciences Corporation. Application precedes harvest by approximately 2 months in pistachios. Also pistachios have their hulls, which cover the shell, removed at harvest, therefore the potential for dietary exposure is considered negligible by Valent BioSciences Corporation. Residues are below the LOQ (LOQ = 0.05 ppm) in pistachio.

ii. *Drinking water*. The proposed uses on apples and pistachios are not expected to add potential exposure to drinking water. Soil leaching studies have suggested that 6-BA is relatively immobile, absorbing to sediment. Residues reaching surface waters from field runoff should quickly absorb to sediment particles and be partitioned from the water column. 6-Benzyladenine also has low solubility in water, 0.061 mg/mL, and detections in ground water are not expected. Valent BioSciences Corporation concludes that together these data indicate that residues are not expected in drinking water.

2. *Non-dietary exposure*. The proposed uses involve application of 6-BA to crops grown in an agricultural environment. The only non-dietary exposure expected is that to applicators. However, the protective measures prescribed by the product's label are expected to be adequate to minimize exposure and protect applicators of the chemical.

E. Cumulative Exposure

No cumulative adverse effects are expected from long-term exposure to this chemical. There is no reliable information to indicate that toxic effects produced by 6-BA would be cumulative with those of any other pesticide chemical.

F. Safety Determination

1. *U.S. population*. Chronic dietary exposure estimates were conducted for the overall U.S. population and 25 population subgroups, including infants and children. These estimated daily intakes were compared against a chronic population adjusted dose (PAD) based on a NOAEL of 50 mg/kg bwt/day from a developmental study in rats. To account for intraspecies and interspecies variation and the use of an acute toxicological endpoint for a chronic assessment, an uncertainty factor (UF) of 1,000 was applied to the acute NOAEL. This resulted in a chronic PAD of 0.05 mg/kg bwt/day. Daily exposure for the overall U.S. population was estimated to be 0.000014 mg/kg bwt/day, representing less than 0.1% of the estimated chronic PAD.

2. *Infants and children*. Estimated daily exposures, assuming that 100% of the apple and pistachio commodities in the United States are treated with 6-BA, for the most highly exposed population subgroup, non-nursing infants, was estimated to be 0.000085 mg/kg bwt/day, or 0.2% of the estimated chronic PAD.

G. Effects on the Immune and Endocrine Systems

6-Benzyladenine is a naturally occurring cytokinin which has plant growth regulator properties. There is no indication that this plant growth regulator belongs to a class of chemicals known or suspected of having adverse effects on the immune and endocrine systems. It can be concluded that based upon the existing toxicology there would be no adverse effects on the immune or endocrine systems from the use of 6-BA. Last, there is no evidence that 6-BA bioaccumulates in the environment.

H. Existing Tolerances

The plant growth regulator 6-BA is exempt from the requirement of a tolerance when used as a fruit-thinning agent at an application rate not to exceed 30 grams of active ingredient per acre in or on apples.

6-Benzyladenine is temporarily exempt from the requirement of a tolerance in or on apples at ≦182 grams of active ingredient per acre per season, and in or on pistachio at ≦60 grams of active ingredient per acre per season when used in accordance with the Experimental Use Permit 73049–EUP–2. The exemption from a tolerance will expire on January 31, 2005.

I. International Tolerances

There are no codex, Canadian, or Mexican maximum residue limits for use of 6-BA on apple or pistachio.

[FR Doc. 03–19280 Filed 7–29–03; 8:45 am]

BILLING CODE 6560–50–S

ENVIRONMENTAL PROTECTION AGENCY

[OPP–2003–0256; FRL–7319–7]

Indian Meal Moth Granulosis Virus; Notice of Filing a Pesticide Petition to Establish a Tolerance for a Certain Pesticide Chemical in or on Food

AGENCY: Environmental Protection Agency (EPA).

ACTION: Notice.

SUMMARY: This notice announces the initial filing of a pesticide petition proposing the establishment of regulations for residues of a certain pesticide chemical in or on various food commodities.

DATES: Comments, identified by docket ID number OPP–2003–0256, must be received on or before August 29, 2003.

ADDRESSES: Comments may be submitted electronically, by mail, or through hand delivery/courier. Follow the detailed instructions as provided in Unit I. of the **SUPPLEMENTARY INFORMATION.**

FOR FURTHER INFORMATION CONTACT: Leonard Cole, Biopesticides and Pollution Prevention Division (7511C), Office of Pesticide Programs, Environmental Protection Agency, 1200 Pennsylvania Ave., NW., Washington, DC 20460–0001; telephone number: (703) 305–5412; e-mail address: *cole.leonard@epa.gov*.

SUPPLEMENTARY INFORMATION:

I. General Information

A. Does this Action Apply to Me?

You may be potentially affected by this action if you are an agricultural producer, food manufacturer, or pesticide manufacturer. Potentially affected entities may include, but are not limited to:

- Crop production (NAICS 111)
- Animal production (NAICS 112)
- Food manufacturing (NAICS 311)
- Pesticide manufacturing (NAICS 32532)

This listing is not intended to be exhaustive, but rather provides a guide for readers regarding entities likely to be affected by this action. Other types of entities not listed in this unit could also be affected. The North American Industrial Classification System (NAICS) codes have been provided to assist you and others in determining whether this action might apply to certain entities. If you have any questions regarding the applicability of this action to a particular entity, consult the person listed under **FOR FURTHER INFORMATION CONTACT.**

B. How Can I Get Copies of this Document and Other Related Information?

1. *Docket*. EPA has established an official public docket for this action under docket identification (ID) number OPP–2003–0256. The official public docket consists of the documents specifically referenced in this action, any public comments received, and other information related to this action. Although a part of the official docket, the public docket does not include Confidential Business Information (CBI) or other information whose disclosure is restricted by statute. The official public docket is the collection of materials that is available for public viewing at the Public Information and Records Integrity Branch (PIRIB), Rm. 119, Crystal Mall #2, 1921 Jefferson Davis Hwy., Arlington, VA. This docket facility is open from 8:30 a.m. to 4 p.m., Monday through Friday, excluding legal holidays. The docket telephone number is (703) 305–5805.

2. *Electronic access*. You may access this **Federal Register** document electronically through the EPA Internet under the ''**Federal Register**'' listings at *http://www.epa.gov/fedrgstr/*.

An electronic version of the public docket is available through EPA's electronic public docket and comment system, EPA Dockets. You may use EPA Dockets at *http://www.epa.gov/edocket/* to submit or view public comments, access the index listing of the contents of the official public docket, and to access those documents in the public docket that are available electronically. Although not all docket materials may be available electronically, you may still access any of the publicly available docket materials through the docket facility identified in Unit I.B.1. Once in the system, select ''search, '' then key in the appropriate docket ID number.

Certain types of information will not be placed in the EPA Dockets. Information claimed as CBI and other information whose disclosure is restricted by statute, which is not included in the official public docket, will not be available for public viewing in EPA's electronic public docket. EPA's policy is that copyrighted material will not be placed in EPA's electronic public docket but will be available only in printed, paper form in the official public docket. To the extent feasible, publicly available docket materials will be made available in EPA's electronic public docket. When a document is selected from the index list in EPA Dockets, the system will identify whether the document is available for viewing in EPA's electronic public docket. Although not all docket materials may be available electronically, you may still access any of the publicly available docket materials through the docket facility identified in Unit I.B.1. EPA intends to work towards providing electronic access to all of the publicly available docket materials through EPA's electronic public docket.

For public commenters, it is important to note that EPA's policy is that public comments, whether submitted electronically or in paper, will be made available for public viewing in EPA's electronic public docket as EPA receives them and without change, unless the comment contains copyrighted material, CBI, or other information whose disclosure is restricted by statute. When EPA identifies a comment containing copyrighted material, EPA will provide a reference to that material in the version of the comment that is placed in EPA's electronic public docket. The entire printed comment, including the copyrighted material, will be available in the public docket.

Public comments submitted on computer disks that are mailed or delivered to the docket will be transferred to EPA's electronic public docket. Public comments that are mailed or delivered to the docket will be scanned and placed in EPA's electronic public docket. Where practical, physical objects will be photographed, and the photograph will be placed in EPA's electronic public docket along with a brief description written by the docket staff.

C. How and to Whom Do I Submit Comments?

You may submit comments electronically, by mail, or through hand delivery/courier. To ensure proper receipt by EPA, identify the appropriate docket ID number in the subject line on the first page of your comment. Please ensure that your comments are submitted within the specified comment period. Comments received after the close of the comment period will be marked ''late.'' EPA is not required to consider these late comments. If you wish to submit CBI or information that is otherwise protected by statute, please follow the instructions in Unit I.D. Do not use EPA Dockets or e-mail to submit CBI or information protected by statute.

1. *Electronically*. If you submit an electronic comment as prescribed in this unit, EPA recommends that you include your name, mailing address, and an e-mail address or other contact information in the body of your comment. Also include this contact information on the outside of any disk or CD ROM you submit, and in any cover letter accompanying the disk or CD ROM. This ensures that you can be identified as the submitter of the comment and allows EPA to contact you in case EPA cannot read your comment due to technical difficulties or needs further information on the substance of your comment. EPA's policy is that EPA will not edit your comment, and any identifying or contact information provided in the body of a comment will be included as part of the comment that is placed in the official public docket, and made available in EPA's electronic public docket. If EPA cannot read your comment due to technical difficulties and cannot contact you for clarification, EPA may not be able to consider your comment.

i. *EPA Dockets*. Your use of EPA's electronic public docket to submit comments to EPA electronically is EPA's preferred method for receiving comments. Go directly to EPA Dockets at *http://www.epa.gov/edocket*, and follow the online instructions for submitting comments. Once in the system, select ''search,'' and then key in docket ID number OPP–2003–0256. The system is an ''anonymous access'' system, which means EPA will not know your identity, e-mail address, or other contact information unless you provide it in the body of your comment.

ii. *E-mail*. Comments may be sent by e-mail to *opp-docket@epa.gov*, Attention: Docket ID Number OPP–2003–0256. In contrast to EPA's electronic public docket, EPA's e-mail system is not an ''anonymous access'' system. If you send an e-mail comment directly to the docket without going through EPA's electronic public docket, EPA's e-mail system automatically captures your e-mail address. E-mail addresses that are automatically captured by EPA's e-mail system are included as part of the comment that is placed in the official public docket, and made available in EPA's electronic public docket.

iii. *Disk or CD ROM*. You may submit comments on a disk or CD ROM that you mail to the mailing address identified in Unit I.C.2. These electronic submissions will be accepted in WordPerfect or ASCII file format. Avoid the use of special characters and any form of encryption.

2. *By mail*. Send your comments to: Public Information and Records Integrity Branch (PIRIB) (7502C), Office of Pesticide Programs (OPP), Environmental Protection Agency, 1200 Pennsylvania Ave., NW., Washington, DC 20460–0001, Attention: Docket ID Number OPP–2003–0256.

3. *By hand delivery or courier*. Deliver your comments to: Public Information and Records Integrity Branch (PIRIB), Office of Pesticide Programs (OPP), Environmental Protection Agency, Rm. 119, Crystal Mall #2, 1921 Jefferson Davis Hwy., Arlington, VA, Attention: Docket ID Number OPP–2003–0256. Such deliveries are only accepted during the docket's normal hours of operation as identified in Unit I.B.1.

D. How Should I Submit CBI to the Agency?

Do not submit information that you consider to be CBI electronically through EPA's electronic public docket or by e-mail. You may claim information that you submit to EPA as CBI by marking any part or all of that information as CBI (if you submit CBI on disk or CD ROM, mark the outside of the disk or CD ROM as CBI and then identify electronically within the disk or CD ROM the specific information that is CBI). Information so marked will not be disclosed except in accordance with procedures set forth in 40 CFR part 2.

In addition to one complete version of the comment that includes any information claimed as CBI, a copy of the comment that does not contain the information claimed as CBI must be submitted for inclusion in the public docket and EPA's electronic public docket. If you submit the copy that does not contain CBI on disk or CD ROM, mark the outside of the disk or CD ROM clearly that it does not contain CBI. Information not marked as CBI will be included in the public docket and EPA's electronic public docket without prior notice. If you have any questions about CBI or the procedures for claiming CBI, please consult the person listed under **FOR FURTHER INFORMATION CONTACT**.

E. What Should I Consider as I Prepare My Comments for EPA?

You may find the following suggestions helpful for preparing your comments:

1. Explain your views as clearly as possible.
2. Describe any assumptions that you used.
3. Provide copies of any technical information and/or data you used that support your views.
4. If you estimate potential burden or costs, explain how you arrived at the estimate that you provide.
5. Provide specific examples to illustrate your concerns.
6. Make sure to submit your comments by the deadline in this notice.
7. To ensure proper receipt by EPA, be sure to identify the docket ID number assigned to this action in the subject line on the first page of your response. You may also provide the name, date, and **Federal Register** citation.

II. What Action is the Agency Taking?

EPA has received a pesticide petition as follows proposing the establishment and/or amendment of regulations for residues of a certain pesticide chemical in or on various food commodities under section 408 of the Federal Food, Drug, and Cosmetic Act (FFDCA), 21 U.S.C. 346a. EPA has determined that this petition contains data or information regarding the elements set forth in FFDCA section 408(d)(2); however, EPA has not fully evaluated the sufficiency of the submitted data at this time or whether the data support granting of the petition. Additional data may be needed before EPA rules on the petition.

List of Subjects

Environmental protection, Agricultural commodities, Feed additives, Food additives, Pesticides and pests, Reporting and recordkeeping requirements.

Dated: July 21, 2003.

Janet L. Andersen,

Director, Biopesticides and Pollution Prevention Division, Office of Pesticide Programs.

Summary of Petition

The petitioner summary of the pesticide petition is printed below as required by FFDCA section 408(d)(3). The summary of the petition was prepared by the petitioner and represents the view of the petitioner. The petition summary announces the availability of a description of the analytical methods available to EPA for the detection and measurement of the pesticide chemical residues or an explanation of why no such method is needed.

AgriVir, LLC

PP 3F6736

EPA received a pesticide petition (PP 3F6736) from AgriVir, LLC, 1901 L St., NW., Suite 250, Washington, DC 20036, proposing pursuant to section 408(d) of the Federal Food, Drug, and Cosmetic Act (FFDCA), 21 U.S.C. 346a(d), to amend 40 CFR 180.1218 to expand the tolerance exemption from the existing exemption for use on dried fruits and nuts to use on all agricultural commodities and relevant processed fractions. EPA has determined that the petition contains data or information regarding the elements set forth in section 408(d)(2); however, EPA has not completed a review of the sufficiency of the submitted data at this time. The summary represents the views of AgriVir, LLC. EPA is still in the process of evaluating the petition. EPA has made minor edits to the summary for the purpose of clarity.

A. Residue Chemistry

Residue chemistry, *per se*, is not required in support of the proposed tolerance exemption. This is because EPA has waived this requirement for microbial pet control agents which do not trigger Tier II toxicology concerns. Indian Meal Moth Granulosis Virus (IMMGV) does not trigger Tier II toxicology concerns. A brief summary of the identity of the microbial pest control agent IMMGV follows for information purposes

EPA has previously registered AgriVir's microbial pest control product FruitGuard-V/NutGuard-V (these are alternate names for the same product), EPA Reg. No. 73176–1. This is a biological insecticide intended to control Indian meal moth, a serious pest of various stored commodities.

The Indian meal moth, is a serious cosmopolitan pest of many stored agricultural commodities and processed fractions. Infestation can occur at any time from harvest to eventual consumption of the commodity. Indian meal moth, is estimated to be responsible, for example, for approximately 90% of the damage done to dried fruits and nuts in storage. In facilities where susceptible commodities are handled, fragments and other debris from the commodities gets into cracks, crevices, and other places and Indian meal moth, propagates on this material. This establishes a general infestation and reservoir for the Indian meal moth in such facilities.

Control of Indian meal moth by FruitGuard-V/NutGuard-V is by means of a naturally occurring microbial pest control agent (MPCA) which is contained in the product.

The MPCA used in NutGuard-V/FruitGuard-V is a granulosis virus which infects the larvae of the Indian meal moth. This virus is designated IMMGV in the balance of this summary. The MPCA contained in NutGuard-V/FruitGuard-V is a naturally occurring isolate of the IMMGV. It has not been genetically modified.

IMMGV has no hosts other than larvae of the Indian meal moth and acts by making the Indian meal moth larvae sick, rather than by a toxic mechanism (i.e., IMMGV does not produce any specific toxin which kills the larvae).

Indian meal moth larvae succumb to granulosis disease due to serious damage to one of their major organs for storage of nutrients.

The above-cited products are equivalent to a technical grade of IMMGV. They are prepared without isolation of IMMGV and, as such, the MPCA which is the subject of the present petition consists, therefore, of IMMGV occlusion bodies (viral particles) and Indian meal moth larval parts mixed into a production larval diet containing wheat bran, brewer's yeast, vitamins, methyl paraben, and sorbic acid.

B. Toxicological Profile

The mode of action for IMMGV in its host, the larval stage of *P. interpunctella*, is pathogenic in nature. IMMGV produces granulosis disease in the larvae of *P. interpunctella*. ''Granulosis'' disease is so named because cells in infected tissue sections, when observed under light microscopy, are full of minute, refractile bodies termed ''granules.'' The initial signs of granulosis disease occur several days after larval ingestion of the viral occlusion bodies and consist of sluggishness and loss of appetite. These initial signs are followed by a change in the appearance of the larvae. They are normally light brown and semilucent but when infected become opaque and white. This change is the result of the massive accumulation of viral occlusion bodies in the fat body of the infected larva. The fat body is the site of intermediary metabolism in these larvae and it is in the fat body that fat, protein, and glycogen are primarily stored. The pathogenicity of IMMGV to the larva results from the mode of viral release from cells of the fat body. As discussed above, this occurs by rupture of the cells of the fat body, thereby leading to degeneration and necrosis of the fat body and, ultimately, death of the infected larva.

The above-cited mode of action is distinct from a toxicity based mode of action. That is, unlike some microbial pest control agents which produce endo- or exo-toxins which act to kill the target pest, IMMGV produces no toxins as part of its mode of action.

1. *Hazard potential to mammals*. IMMGV poses no hazard potential to mammals via ingestion, dermal contact, or inhalation. There is no baculovirus (the type of virus which IMMGV is) known to infect or replicate in any vertebrate host. Among invertebrates, IMMGV itself has no known host other than larvae of *P. interpunctella* and has been shown not to cross-infect lepidopteran or other insects other than *P. interpunctella*.

A number of studies on the toxicity of baculoviruses, inclusive of granulosis viruses, to animals have shown that these agents are non-toxic by the oral, dermal, inhalation, and injection routes of exposure and that no effects on overall health, gross or micro pathology, hematology, clinical chemistry, and antibody stimulation occur in test animals. These studies have been published in the open literature and were submitted as part of AgriVir, LLC's petition.

Cell culture studies (submitted by AgriVir as part of its submission) have shown that IMMGV which is actively infective and pathogenic to IMM larva does not produce cytotoxicity nor does it replicate in or produce pathogenicity in the following mammalian cell lines:

WI-38 (ATTC CCL 75: human lung (embryonic))

WS1 (ATTC CRL 1502: human endothelium (embryonic skin))

CV-1 (ATTC CCL 70: African green monkey, renal)

These cell culture studies further support the already established fact that IMMGV poses no hazard to mammals.

Due to the physical properties of the final product and of the bran carrier, the technical MPCA does have a mild to moderate, reversible eye irritation potential.

2. *Hazard potential to the environment*. The only potential environmental effect of IMMGV is on the population of Indian meal moths. This is because, as discussed above, IMMGV has no hosts other than larvae of the Indian meal moth and acts by a pathogenicity mechanism rather than a toxicity mechanism (i.e., IMMGV does produce any specific toxin). Since IMMGV is a naturally occurring virus which has naturally infected Indian meal moth larvae for at least decades and probably longer, its use on Indian meal moth larvae which may infest dried fruits and nuts and other stored commodities cannot reasonably be expected to endanger the Indian meal moth population as a whole.

Therefore, there are no reasonably anticipated or likely environmental effects of use of IMMGV for protection of agricultural commodities from Indian meal moth damage.

3. *Hazard potential to non-target species*. There is no hazard potential to non-target species. As above-noted, there is no baculovirus known to infect or replicate in any vertebrate host. Among invertebrates, IMMGV itself has no known host other than larvae of *P. interpunctella* and has been shown not to cross-infect lepidopteran or other insects other than *P. interpunctella*.

C. Aggregate Exposure

1. *Dietary exposure*–i. *Food*. The levels of residues in treated commodities will be very low. The application rates for IMMGV are from 1 to 5 ounces of formulated (i.e., technical) MPCA per ton of commodity to be treated. Therefore, dietary exposure is insignificant.

ii. *Drinking water*. The proposed use patterns for IMMGV are for indoor food and non-food uses. Therefore, there is no potential for drinking water exposure associated with the approval of this petition.

2. *Non-dietary exposure*. IMMGV only has any pest control utility in the treatment of various commodities for control of Indian meal moth. Therefore, the only potential for non-dietary exposure is to applicators and to mixer/loaders who will use product containing IMMGV. These non-dietary exposures are not covered within FQPA and they are expected to be low. Information already in EPA's data bases which had been cited by AgriVir, LLC indicates that workers involved with baculovirus production and use do not experience adverse effects as a result of these exposures.

D. Cumulative Effects

Due to its mechanism of action and extremely limited host specificity, it can be reliably stated that IMMGV does not share a common mechanism of action with any other conventional, biochemical, or microbial pesticide.

E. Endocrine Effects

There is no reliable information to indicate that IMMGV has a potential to produce endocrine effects. The available studies suggest that IMMGV is essentially biologically inactive in any organism other than its natural host, the larva of the Indian meal moth.

F. Safety Determination

1. *U.S. population*. Since the available information reliably supports that IMMGV will not produce adverse effects in humans of any age as a result of exposure by ingestion, dermal contact, or inhalation, AgriVir, LLC concludes that there is a reasonable certainty that no harm to the general adult population will result from dietary exposure to residues which could occur as a result of approval of this petition.

2. *Infants and children*. Since the available information reliably supports that IMMGV will not produce adverse effects in humans of any age as a result of exposure by ingestion, dermal

contact, or inhalation, AgriVir, LLC concludes that there is a reasonable certainty that no harm to infants and children will result from dietary exposure to residues which could occur as a result of approval of this petition.

3. *Sensitive individuals.* Since the available information reliably supports that IMMGV will not produce adverse effects in humans of any age as a result of exposure by ingestion, dermal contact, or inhalation, and indeed that IMMGV appears to be biologically inactive in other than its natural host, AgriVir, LLC concludes that there is a reasonable certainty that no harm to sensitive persons will result from dietary exposure to residues which could occur as a result of approval of this petition.

G. International Tolerances

There are no Codex maximum residue levels established for residues of IMMGV. IMMGV containing products are presently not registered for pest control outside of the U.S.

[FR Doc. 03–19354 Filed 7–29–03; 8:45 am]

BILLING CODE 6560–50–S

ENVIRONMENTAL PROTECTION AGENCY

[FRL–7537–7]

Framework for Application of the Toxicity Equivalence Methodology for Polychlorinated Dioxins, Furans, and Biphenyls in Ecological Risk Assessment (External Review Draft); Notice of Availability

AGENCY: Environmental Protection Agency.

ACTION: Notice of availability and opportunity for public comment.

SUMMARY: The U.S. Environmental Protection Agency (EPA) is announcing a 60-day public comment period for the draft document titled Framework for Application of the Toxicity Equivalence Methodology for Polychlorinated Dioxins, Furans, and Biphenyls in Ecological Risk Assessment. The document is intended to describe a methodology for assessing ecological risks associated with complex mixtures of dioxins, furans, and dioxin-like PCBs in the environment. EPA will consider the public comments in revising the document.

DATES: Comments must be received by September 29, 2003.

ADDRESSES: The draft is available via the Internet at *http://cfpub.epa.gov/ncea/raf/recordisplay.cfm?deid=55669.* Comments may be submitted electronically, by mail, or in person, as described in the instructions under Supplementary Information. Comments may be viewed at EPA Dockets at *http://www.epa.gov/edocket* (under Docket ID No. ORD–2003–0002).

FOR FURTHER INFORMATION CONTACT: Marilyn Brower, U.S. EPA, ORD National Center for Environmental Assessment, Risk Assessment Forum Staff (8601D), 1200 Pennsylvania Ave. NW., Washington, DC 20460; telephone: 202–564–3363; fax: 202–565–0062; e-mail: *brower.marilyn@epa.gov.*

SUPPLEMENTARY INFORMATION:

I. Submission of Comments

You may submit comments electronically, by mail, or through hand delivery/courier. To ensure proper receipt by EPA, identify the appropriate docket identification number (ORD–2003–0002) in the subject line on the first page of your comment. Please note that all comments received in response to this notice will be placed in a public record. For that reason, comments should not contain personal information (such as medical data or home address), Confidential Business Information, or information protected by copyright.

A. Electronically to EPA Dockets

Your use of EPA's electronic public docket (EPA Dockets) to submit comments is EPA's preferred method for receiving comments. Go directly to EPA Dockets at *http://www.epa.gov/edocket* and follow the online instructions for submitting comments. Once in the system, select ''search,'' and then key in Docket ID No. ORD–2003–0002. The system is an ''anonymous access'' system, which means EPA will not know your identity, e-mail address, or other contact information unless you provide it. EPA recommends that you include your name and contact information in the body of your comment to ensure that you can be identified as the submitter of the comment and to allow EPA to contact you in case EPA cannot read your comment due to technical difficulties or needs further information on the substance of your comment.

B. By Mail

Comments may be sent to: Office of Environmental Information Docket, Environmental Protection Agency, Mailcode: 28220T, 1200 Pennsylvania Ave. NW, Washington, DC 20460, Attention Docket ID No. ORD–2003–0002.

C. By Hand Delivery or Courier

Deliver your comments to: Office of Environmental Information Docket, EPA West, Room B102, 1301 Constitution Ave. NW, Washington, DC, Attention Docket ID No. ORD–2003–0002. Such deliveries are only accepted during the Docket's normal hours of operation from 8:30 a.m. to 4:30 p.m., Monday through Friday, excluding legal holidays. The telephone number for the docket is 202–566–1752.

II. Background

Polychlorinated dioxins (PCDDs), furans (PCDFs), and biphenyls (PCBs) commonly occur as complex mixtures in the environment. For more than a decade, EPA and other organizations have estimated the combined risks that such mixtures pose to human health using a method known as the toxicity equivalence methodology. The methodology is based on findings that certain PCDDs, PCDFs, and PCBs share a common mechanism of action for their effects but differ in potency. The methodology uses potency factors (such as Toxicity Equivalence Factors, or TEFs) assigned to each chemical in the mixture as a way of integrating the risks from the entire mixture. Application in ecological risk assessments has proceeded more slowly than in human health risk assessment, in part because of the variety of species from different taxonomic classes (*e.g.*, fish, birds, and mammals) to be considered.

As both data and experience with the methodology have accumulated, however, experts have concluded that the toxicity equivalence methodology can strengthen assessments of ecological risks. At a World Health Organization consultation in 1997, international consensus TEFs for PCDDs, PCDFs, and PCBs were reviewed and the toxicity equivalence methodology expanded to include class-specific TEFs for mammals, birds and fish. In 1998, EPA and the U.S. Department of Interior sponsored a workshop that recommended the development of further guidance on application of the toxicity equivalence methodology. This draft framework has been developed in direct response to that workshop recommendation by a technical panel under EPA's Risk Assessment Forum.

Organized in accordance with EPA's *Guidelines for Ecological Risk Assessment* (63 FR 26846), this framework is intended to assist EPA scientists in using the methodology, as well as to inform EPA decision makers, other agencies, and the public about this methodology. It provides ecological risk assessors with an understanding of the uncertainties associated with the application of the methodology in general and with situation-specific decisions made in applying the

methodology within their risk assessments. The draft framework also discusses several potential advantages of the toxicity equivalence methodology compared with alternative methods for estimating risks from mixtures of dioxin-like chemicals.

The document is undergoing peer review concurrent with the public comment period described in this notice. This framework is not a regulation nor is it intended to substitute for federal regulations. It does not establish any substantive ''rules'' under the Administrative Procedure Act or any other law and will have no binding effect on EPA or any regulated entity.

Dated: July 23, 2003.

Peter W. Preuss,

Director, National Center for Environmental Assessment.

[FR Doc. 03–19351 Filed 7–29–03; 8:45 am]

BILLING CODE 6560–50–P

ENVIRONMENTAL PROTECTION AGENCY

[FRC–7537–9]

Lexington County Landfill Superfund Site; Notice of Proposed Settlement

AGENCY: Environmental Protection Agency.

ACTION: Notice of proposed settlement.

SUMMARY: The United States Environmental Protection Agency is proposing to enter into an Administrative Agreement for recovery of Future Response Costs pursuant to section 122(h) (1) of the Comprehensive Environmental Response, Compensation and Liability Act of the 1980 (CERCLA), as amended regarding the Lexington County Landfill Superfund Site located in Cayce, Lexington County, South Carolina. This Agreement is made and entered into by EPA and by Lexington County, South Carolina (''Setting Parties''). EPA will consider Public comments on the proposed settlement until August 29, 2003.

EPA may withdraw from or modify the proposed settlement should such comments disclose fact or considerations which indicate the proposed settlement is appropriate, improper, or inadequate. Copies of the proposed settlement are available from: Ms. Paula V. Batchelor, U.S. EPA, Region 4, Sam Nunn Atlanta Federal Center, Waste Management Division, 61 Forsyth Street, SW., Atlanta, Georgia 30303, (404) 562–8887.

Written comments may be submitted to Ms. Batchelor within thirty (30) calendar days of the date of this publication.

Dated: July 14, 2003.

Archie Lee,

Chief, CERCLA Program Services Branch, Waste Management Division.

[FR Doc. 03–19350 Filed 7–29–03; 8:45 am]

BILLING CODE 6560–50–P

ENVIRONMENTAL PROTECTION AGENCY

[FRL–7537–3]

Proposed Agreement Pursuant to Section 122(h)(1) of the Comprehensive Environmental Response, Compensation, and Liability Act (CERCLA) for the Sybill Used Oil Processing Plant Site in Detroit, MI

AGENCY: Environmental Protection Agency (''EPA'').

ACTION: Notice and request for public comment on proposed CERCLA 122(h)(1) agreement with General Motors Corporation (GM), Ford Motor Company, Detroit Diesel Corporation, Rouge Steel Company, Sybill, Inc. and the Chapter 7 Bankruptcy Trustee for V.C. Madias addressing contamination at the Sybill used oil processing plant in Detroit, Michigan.

SUMMARY: In accordance with section 122(i)(1) of CERCLA, notification is hereby given of a proposed administrative settlement agreement concerning the Sybill used oil processing plant at 111 Military Street in Detroit, Wayne County, Michigan (the ''Site''). EPA proposes to enter into this agreement under the authority of sections 122(h) and 107 of CERCLA. The proposed agreement has been executed by GM, Ford Motor Company, Detroit Diesel Corporation, Rouge Steel Company, Sybill, Inc. and the Chapter 7 Bankruptcy Trustee for V.C. Madias (the ''Settling Parties''). Under the proposed agreement, the Settling Parties will implement a removal action to address waste oil contamination at the used oil processing facility formerly owned and operated by Sybill, Inc. and located in Detroit, Michigan. Also, the Settling Parties will pay to the Hazardous Substances Superfund all of the Agency's future oversight costs to be incurred in overseeing the work under the agreement. In addition, under this agreement, EPA waives all of its past response costs incurred at the Sybill Site ($56,000). EPA incurred these past response costs mitigating an imminent and substantial endangerment to human health or the environment present or threatened by hazardous substances present at the Site. For thirty days following the date of publication of this notice, the EPA will receive written comments relating to this proposed agreement. EPA will consider all comments received and may decide not to enter this proposed agreement if comments disclose facts or considerations which indicate that the proposed agreement is inappropriate, improper or inadequate.

DATES: Comments on the proposed agreement must be received by EPA on or before August 29, 2003.

ADDRESSES: Comments should be addressed to the Docket Clerk, U.S. Environmental Protection Agency, Region 5, 77 West Jackson Boulevard, Chicago, Illinois 60604–3590, and should refer to: In the Matter of Sybill, Inc., EPA Docket No. V-W–03-C–746.

FOR FURTHER INFORMATION CONTACT: Thomas J. Martin, U.S. Environmental Protection Agency, Office of Regional Counsel, C–14J, 77 West Jackson Boulevard, Chicago, Illinois 60604–3590, (312) 886–4273. A copy of the proposed administrative settlement agreement may be obtained in person or by mail from the EPA's Region 5 Office of Regional Counsel, 77 West Jackson Boulevard, Chicago, Illinois 60604–3590. Additional background information relating to the settlement is available for review at the EPA's Region 5 Office of Regional Counsel.

Authority: The Comprehensive Environmental Response, Compensation, and Liability Act, as amended, 42 U.S.C. 9601–9675.

William E. Muno,

Director, Superfund Division, Region 5.

[FR Doc. 03–19284 Filed 7–29–03; 8:45 am]

BILLING CODE 6560–50–P

FEDERAL COMMUNICATIONS COMMISSION

[Report No. AUC–03–51–B (Auction No. 51); DA 03–1994]

Auction of Regional Narrowband PCS Licenses Scheduled for September 24, 2003; Notice and Filing Requirements, Minimum Opening Bids, Upfront Payments, Package Bidding and Other Auction Procedures

AGENCY: Federal Communications Commission.

ACTION: Notice.

SUMMARY: This document announces the procedures and minimum opening bids for the upcoming auction of six regional narrowband Personal Communications Services (''narrowband PCS'') licenses

in the 900 MHz band scheduled for September 24, 2003 (Auction No. 51). This document is intended to familiarize prospective bidders with the procedures and minimum opening bids for this auction.

DATES: Auction No. 51 is scheduled to begin on September 24, 2003.

FOR FURTHER INFORMATION CONTACT: Auctions and Industry Analysis Division, WTB: Legal questions: Christopher Shields at (202) 418–0660, or General auction questions: Lisa Stover at (717) 338–2888, Questions about package bidding: Martha Stancill at (202) 418–0660 or Craig Bomberger at (202) 418–0660. Media Contact: Press inquiries: Meribeth McCarrick at (202) 418–0654. Commercial Wireless Division, WTB: Service rule questions: Amal Abdallah at (202) 418–7307, Evan Baranoff at (202) 418–7142, JoAnn Epps at (202) 418–0620 or Dwain Livingston at (202) 418–0620.

SUPPLEMENTARY INFORMATION: This is a summary of the *Auction No. 51 Procedures Public Notice* released on June 18, 2003. The complete text of the *Auction No. 51 Procedures Public Notice,* including attachments, is available for public inspection and copying during regular business hours at the FCC Reference Information Center, Portals II, 445 12th Street, SW., Room CY–A257, Washington, DC 20554. The *Auction No. 51 Procedures Public Notice* may also be purchased from the Commission's duplicating contractor, Qualex International, Portals II, 445 12th Street, SW., Room CY–B402, Washington, DC, 20554, telephone 202–863–2893, facsimile 202–863–2898, or via e-mail *qualexint@aol.com*. The Auction No. 51 Procedures Public Notice is also available on the Internet at the Commission's Web site: http://wireless.fcc.gov/auctions/51/.

I. General Information

A. Introduction

1. The *Auction No. 51 Procedures Public Notice* announces the procedures and minimum opening bids for the upcoming auction of six regional narrowband Personal Communications Services (''narrowband PCS'') licenses in the 900 MHz band scheduled for September 24, 2003 (Auction No. 51). On April 3, 2003, in accordance with the Balanced Budget Act of 1997, the Bureau released a public notice seeking comment on reserve prices or minimum opening bids and the procedures to be used for the auction of six regional narrowband PCS licenses. The Bureau received no comments and no reply comments in response to the *Auction No. 51 Comment Public Notice,* 68 FR 18642 (April 16, 2003).

i. Licenses To Be Auctioned

2. Auction No. 51 will offer six regional narrowband PCS licenses. The spectrum to be auctioned was previously associated with licenses that were awarded based on Auction No. 3 but have since been cancelled or terminated. A complete list of licenses available in Auction No. 51 and their descriptions is included in Attachment A of the *Auction No. 51 Procedures Public Notice.*

3. The following table describes the licenses that will be auctioned:

Region	Channel No.	Channel description	Frequency bands (MHz)	Bandwidth (kHz)
Northeast	17	12.5 kHz/50 kHz paired	901.8250–901.8375, 930.70–930.75	62.5
South	16	12.5 kHz/50 kHz paired	901.8125–901.8250, 930.65–930.70	62.5
South	17	12.5 kHz/50 kHz paired	901.8250–901.8375, 930.70–930.75	62.5
Midwest	17	12.5 kHz/50 kHz paired	901.8250–901.8375, 930.70–930.75	62.5
Central	17	12.5 kHz/50 kHz paired	901.8250–901.8375, 930.70–930.75	62.5
West	17	12.5 kHz/50 kHz paired	901.8250–901.8375, 930.70–930.75	62.5

B. Rules and Disclaimers

i. Relevant Authority

4. Prospective bidders must familiarize themselves thoroughly with the Commission's rules relating to narrowband PCS, contained in title 47, part 24 and part 90 of the Code of Federal Regulations, and those relating to application and auction procedures, contained in title 47, part 1 of the Code of Federal Regulations. Prospective bidders must also be thoroughly familiar with the procedures, terms and conditions (collectively, ''terms'') contained in the *Auction No. 51 Procedures Public Notice;* the *Auction No. 51 Comment Public Notice;* the *Part 1 Fifth Report and Order,* 65 FR 52401 (August 29, 2000), (as well as prior and subsequent Commission proceedings regarding competitive bidding procedures); the *Narrowband PCS R&O/Further Notice,* 62 FR 27507 (May 20, 1997), the *Narrowband Second Report and Order and Second Further Notice of Proposed Rule,* and the *Third Narrowband Report and Order and Order on Reconsideration.*

5. The terms contained in the Commission's rules, relevant orders, and public notices are not negotiable. The Commission may amend or supplement the information contained in its public notices at any time, and will issue public notices to convey any new or supplemental information to bidders. It is the responsibility of all prospective bidders to remain current with all Commission rules and with all public notices pertaining to this auction. Copies of most Commission documents, including public notices, can be retrieved from the FCC Auctions Internet site at *http://wireless.fcc.gov/auctions.* Additionally, documents are available for public inspection and copying during regular business hours at the FCC Reference Information Center, Portals II, 445 12th Street, SW., Room CY–A257, Washington, DC, 20554, or may be purchased from the Commission's duplicating contractor, Qualex International, Portals II, 445 12th Street, SW., Room CY–B402, Washington, DC 20554, telephone 202–863–2893, facsimile 202–863–2898, or via e-mail *qualexint@aol.com*. When ordering documents from Qualex, please provide the appropriate FCC document number (for example, FCC 01–135 for the *Third Narrowband Report and Order and Order on Reconsideration).*

ii. Prohibition of Collusion

6. To ensure the competitiveness of the auction process, the Commission's rules prohibit applicants for any of the same or overlapping geographic license areas from communicating with each other during the auction about bids, bidding strategies, or settlements. The Bureau has previously stated that auction applicants who have applied for licenses in any of the same geographic areas, and who are also applicants for licenses in the same or competing services must affirmatively avoid all discussions with each other that affect, or in their reasonable assessment have the potential to affect their bidding or their bidding strategy. Accordingly, the prohibition in Section 1.2105(c) applies to communications between Auction No. 50 and Auction No. 51 applicants who have applied for licenses in any of

the same or overlapping geographic license areas. This prohibition begins at the short-form application filing deadline and ends at the down payment deadline after the auction. Applicants for licenses in any of the same or overlapping geographic license areas are encouraged not to use the same individual as an authorized bidder. A violation of the anti-collusion rule could occur if an individual acts as the authorized bidder for two or more competing applicants and conveys information concerning the substance of bids or bidding strategies between the applicants he or she is authorized to represent in the auction. A violation could similarly occur if the authorized bidders are different individuals employed by the same organization (*e.g.*, law firm or consulting firm). In such a case, at a minimum, applicants should certify on their applications that precautionary steps have been taken to prevent communication between authorized bidders and that applicants and their bidding agents will comply with the anti-collusion rule.

7. However, the Bureau cautions that merely filing a certifying statement as part of an application will not outweigh specific evidence that collusive behavior has occurred, nor will it preclude the initiation of an investigation when warranted. The Commission's anti-collusion rules allow applicants to form certain agreements during the auction, provided the applicants have not applied for licenses covering the same geographic areas. Note that Auction No. 51 applicants and Auction No. 50 applicants for licenses in the same or overlapping geographic license areas will not be able to take advantage of these rule provisions, even though the licenses are not completely co-extensive. For example, assume that one applicant applies for several Major Trading Area (''MTA'') licenses in its Auction No. 50 FCC Form 175 and that a second applicant applies for a regional license in its Auction No. 51 FCC Form 175. If the first applicant selects licenses for MTAs that are within the region covered by the regional license selected by the second applicant, the two parties will have applied for licenses covering the same geographic areas. Consequently, unlike applicants who have applied for licenses that do not cover the same geographic areas, these two applicants will not be permitted to form a consortium or bid jointly for licenses after they file FCC Form 175. However, all applicants may enter into bidding agreements *before* filing their FCC Form 175, as long as they disclose the existence of the agreement(s) in their Form 175. If parties agree in principle on all material terms prior to the short-form filing deadline, those parties must be identified on the short-form application pursuant to section 1.2105(c), even if the agreement has not been reduced to writing. If the parties have not agreed in principle by the filing deadline, an applicant would not include the names of those parties on its application, and may not continue negotiations with other applicants for licenses covering any of the same geographic areas. By signing their FCC Form 175 short-form applications, applicants are certifying their compliance with section 1.2105(c).

8. In addition, section 1.65 of the Commission's rules requires an applicant to *maintain* the accuracy and completeness of information furnished in its pending application and to notify the Commission within 30 days of any substantial change that may be of decisional significance to that application. Thus, sections 1.65 and 1.2105 require an auction applicant to notify the Commission of any violation of the anti-collusion rules upon learning of such violation. Bidders therefore are required to make such notification to the Commission immediately upon discovery.

9. A summary listing of documents issued by the Commission and the Bureau addressing the application of the anti-collusion rules may be found in Attachment G of the *Auction No. 51 Procedures Public Notice*.

iii. Due Diligence

10. Potential bidders seeking licenses for regions that are in the border area of Canada or Mexico will be subject to the terms of the coordination arrangements/protocols currently in effect with those respective countries.

11. Potential bidders also should be aware that certain applications (including those for modification), petitions for rulemaking, requests for special temporary authority (''STA'') waiver requests, petitions to deny, petitions for reconsideration, and applications for review may be pending before the Commission and relate to particular applicants or incumbent licensees. In addition, certain judicial proceedings that may relate to particular applicants or incumbent licensees or the licenses available in Auction No. 51 may be commenced, may be pending, or may be subject to further review. We note that resolution of these matters could have an impact on the availability of spectrum in Auction No. 51. Some of these matters (whether before the Commission or the courts) may not be resolved by the time of the auction.

12. Potential bidders are solely responsible for identifying associated risks and for investigating and evaluating the degree to which such matters may affect their ability to bid on, otherwise acquire, or make use of licenses available in Auction No. 51.

13. Potential bidders may obtain information about licenses available in Auction No. 51 through the Bureau's licensing databases on the World Wide Web at *http://wireless.fcc.gov/uls*. Potential bidders should direct questions regarding the search capabilities to the FCC Technical Support hotline at (202) 414–1250 (voice) or (202) 414–1255 (TTY), or via e-mail at *auctech@fcc.gov*. The hotline is available to assist with questions Monday through Friday, from 8 a.m. to 6 p.m. ET. In order to provide better service to the public, *all calls to the hotline are recorded*. The Commission makes no representations or guarantees regarding the accuracy or completeness of information in its databases or any third party databases, including, for example, court docketing systems. Furthermore, the Commission makes no representations or guarantees regarding the accuracy or completeness of information that has been provided by incumbent licensees and incorporated into the database. Potential bidders are strongly encouraged to physically inspect any sites located in, or near, the region for which they plan to bid.

iv. Bidder Alerts

14. All applicants must certify on their FCC Form 175 applications under penalty of perjury that they are legally, technically, financially and otherwise qualified to hold a license, and not in default on any payment for Commission licenses (including down payments) or delinquent on any non-tax debt owed to any Federal agency. Prospective bidders are reminded that submission of a false certification to the Commission is a serious matter that may result in severe penalties, including monetary forfeitures, license revocations, exclusion from participation in future auctions, and/or criminal prosecution.

15. The FCC makes no representations or warranties about the use of this spectrum for particular services. Applicants should be aware that an FCC auction represents an opportunity to become an FCC licensee in this service, subject to certain conditions and regulations. An FCC auction does not constitute an endorsement by the FCC of any particular services, technologies or products, nor does an FCC license constitute a guarantee of business success. Applicants and interested parties should perform their own due

diligence before proceeding, as they would with any new business venture.

16. As is the case with many business investment opportunities, some unscrupulous entrepreneurs may attempt to use Auction No. 51 to deceive and defraud unsuspecting investors. Information about deceptive telemarketing investment schemes is available from the FTC at (202) 326–2222 and from the SEC at (202) 942–7040. Complaints about specific deceptive telemarketing investment schemes should be directed to the FTC, the SEC, or the National Fraud Information Center at (800) 876–7060. Consumers who have concerns about specific proposals regarding Auction No. 51 may also call the FCC Consumer Center at (888) CALL–FCC ((888) 225–5322).

v. National Environmental Policy Act (''NEPA'') Requirements

17. Licensees must comply with the Commission's rules regarding the National Environmental Policy Act (NEPA). The construction of a wireless antenna facility is a federal action and the licensee must comply with the Commission's NEPA rules for each such facility.

C. Auction Specifics

i. Auction Date

18. The auction will begin on Wednesday, September 24, 2003. The initial schedule for bidding will be announced by public notice at least one week before the start of the auction. Unless otherwise announced, bidding on all licenses and packages will be conducted on each business day until bidding has stopped on all licenses and packages.

ii. Auction Title

19. Auction No. 51 ''Regional Narrowband PCS.

iii. Bidding Methodology

20. The bidding methodology for Auction No. 51 will be simultaneous multiple round with package bidding (or ''package bidding''). The Commission will conduct this auction over the Internet, and telephonic bidding will be available as well. As a contingency plan, bidders may also dial in to the FCC Wide Area Network. Qualified bidders are permitted to bid telephonically or electronically.

iv. Pre-Auction Dates and Deadlines

21. The following is a list of important dates related to Auction No. 51:

Auction Seminar	July 31, 2003.
Short-Form (FCC Form 175) Filing Window Opens.	July 31, 2003; 12 p.m. ET.
Short-Form (FCC Form 175) Application Deadline.	August 8, 2003; 6 p.m. ET.
Upfront Payments (via wire transfer).	August 26, 2003; 6 p.m. ET.
Mock Auction	September 17 and 18, 2003.
Auction Begins	September 24, 2003.

v. Requirements for Participation

22. Those wishing to participate in the auction must:

- Submit a short-form application (FCC Form 175) electronically by 6 p.m. ET, August 8, 2003.
- Submit a sufficient upfront payment and an FCC Remittance Advice Form (FCC Form 159) by 6 p.m. ET, August 26, 2003.
- Comply with all provisions outlined in this public notice.

vi. General Contact Information

23. The following is a list of general contact information related to Auction No. 51:

General Auction Information

General Auction Questions; Seminar Registration: FCC Auctions Hotline, (888) 225–5322, Press Option #2, or direct (717) 338–2888, Hours of service: 8 a.m.–5:30 p.m. ET Monday through Friday

Technical Support

Electronic Filing; FCC Automated Auction System: FCC Auctions Technical Support Hotline (202) 414–1250 (Voice), (202) 414–1255 (TTY) Hours of service: 8 a.m.–6 p.m. ET, Monday through Friday

FCC Forms

(800) 418–3676 (outside Washington, DC), (202) 418–3676 (in the Washington Area), *http://www.fcc.gov/formpage.html*

FCC Internet Sites

http://www.fcc.gov, http://wireless.fcc.gov/auctions, http://wireless.fcc.gov/uls

II. Short-Form (FCC Form 175) Application Requirements

24. Guidelines for completion of the short-form (FCC Form 175) are set forth in Attachment C of the *Auction No. 51 Procedures Public Notice*.

A. Ownership Disclosure Requirements (FCC Form 175 Exhibit A)

25. The Commission indicated in the *Broadcast First Report and Order*, 63 FR 48615 (September 11, 1998), that, for purposed of determining eligibility to participate in a broadcast auction, the uniform part 1 ownership disclosure standards would apply. Specifically, in completing FCC Form 175, all applicants will be required to provide information required by sections 1.2105 and 1.2112 of the Commission's rules.

B. Consortia and Joint Bidding Arrangements (FCC Form 175 Exhibit B)

26. Applicants will be required to identify on their short-form applications any parties with whom they have entered into any consortium arrangements, joint ventures, partnerships or other agreements or understandings which relate in any way to the licenses being auctioned, including any agreements relating to post-auction market structure. Applicants will also be required to certify on their short-form applications that they have not entered into any explicit or implicit agreements, arrangements or understandings of any kind with any parties, other than those identified, regarding the amount of their bids, bidding strategies, or the particular licenses on which they will or will not bid.

27. While the anti-collusion rules do not prohibit non-auction related business negotiations among auction applicants, bidders are reminded that certain discussions or exchanges could touch upon impermissible subject matters because they may convey pricing information and bidding strategies.

C. Eligibility

i. Bidding Credit Eligibility (FCC Form 175 Exhibit C)

28. A bidding credit represents the amount by which a bidder's winning bids are discounted. The size of the bidding credit depends on the average of the aggregated annual gross revenues for each of the preceding three years of the bidder, its affiliates, its controlling interests, and the affiliates of its controlling interests.

29. In the *Narrowband Second Report and Order*, the Commission adopted two tiers of bidding credits to promote and facilitate the participation of small businesses in the competitive bidding for licenses in the narrowband PCS service. Therefore, bidding credits are available to small and very small businesses, or consortia thereof, as follows for Auction No. 51:

- A bidder with attributed average annual gross revenues of not more than $40 million for the preceding three years (''small business'') will receive a 15 percent discount on its winning bids;
- A bidder with attributed average annual gross revenues of not more than $15 million for the preceding three years (''very small business'') will receive a 25 percent discount on its winning bids.

30. Bidding credits are not cumulative; a qualifying applicant receives either the 15 percent or 25

percent bidding credit on its winning bid, but only one credit per license.

ii. Tribal Land Bidding Credit

31. To encourage the growth of wireless services in federally recognized tribal lands the Commission has implemented a tribal land bidding credit. *See* section V.E. of the *Auction No. 51 Procedures Public Notice*.

iii. Applicability of Part 1 Attribution Rules

32. *Controlling interest standard*. On August 14, 2000, the Commission released the *Part 1 Fifth Report and Order*, in which the Commission, *inter alia*, adopted a ''controlling interest'' standard for attributing to auction applicants the gross revenues of their investors and affiliates in determining small business eligibility for future auctions. The Commission observed that the rule modifications adopted in the various Part 1 orders would result in discrepancies and/or redundancies between certain of the new Part 1 rules and existing service-specific rules, and the Commission delegated to the Bureau the authority to make conforming edits to the Code of Federal Regulations (CFR) consistent with the rules adopted in the Part 1 proceeding. More recently, the Commission made further modifications to its rules governing the attribution of gross revenues for purposes of determining small business eligibility. These changes included exempting the gross revenues of the affiliates of a rural telephone cooperative's officers and directors from attribution to the applicant if certain specified conditions are met. The Commission also clarified that in calculating an applicant's gross revenues under the controlling interest standard, the personal net worth, including personal income, of its officers and directors will not be attributed to the applicant.

33. Eligibility for small business preferences will be determined based on the attribution rules in effect at the short-form application deadline. Accordingly, the ''controlling interest'' standard as recently modified, and the part 1 rules that superseded inconsistent service-specific rules, will control in Auction No. 51.

34. *Control*. The term ''control'' includes both *de facto* and *de jure* control of the applicant. Typically, ownership of at least 50.1 percent of an entity's voting stock evidences de jure control. *De facto* control is determined on a case-by-case basis. The following are some common indicia of *de facto* control:

- The entity constitutes or appoints more than 50 percent of the board of directors or management committee;
- The entity has authority to appoint, promote, demote, and fire senior executives that control the day-to-day activities of the licensee; or
- The entity plays an integral role in management decisions.

35. *Attribution for small and very small business eligibility*. In determining which entities qualify as small or very small businesses, the Commission will consider the gross revenues of the applicant, its affiliates, its controlling interests, and the affiliates of its controlling interests. The Commission does not impose specific equity requirements on controlling interest holders. Once the principals or entities with a controlling interest are determined, only the revenues of those principals or entities, the affiliates of those principals or entities, the applicant and its affiliates, will be counted in determining small business eligibility.

36. A consortium of small or very small businesses is a ''conglomerate organization formed as a joint venture between or among mutually independent business firms,'' each of which *individually* must satisfy the definition of small or very small business in Sections 1.2110(f) and 24.321. Thus, each consortium member must disclose its gross revenues along with those of its affiliates, its controlling interests, and the affiliates of its controlling interests. We note that although the gross revenues of the consortium members will not be aggregated for purposes of determining eligibility for small or very small business credits, this information must be provided to ensure that each individual consortium member qualifies for any bidding credit awarded to the consortium.

iv. Supporting Documentation

37. Applicants should note that they will be required to file supporting documentation to their FCC Form 175 short-form applications to establish that they satisfy the eligibility requirements to qualify as small or very small businesses (or consortia of small or very small businesses) for this auction.

38. Applicants should further note that submission of an FCC Form 175 application constitutes a representation by the certifying official that he or she is an authorized representative of the applicant, has read the form's instructions and certifications, and that the contents of the application and its attachments are true and correct. Submission of a false certification to the Commission may result in penalties, including monetary forfeitures, license forfeitures, ineligibility to participate in future auctions, and/or criminal prosecution.

39. *Small or very small business eligibility (Exhibit C).* Entities applying to bid as small or very small businesses (or consortia of small or very small businesses) will be required to disclose on Exhibit C to their FCC Form 175 short-form applications, *separately and in the aggregate*, the gross revenues for the preceding three years of each of the following: (i) The applicant, (ii) its affiliates, (iii) its controlling interests, and (iv) the affiliates of its controlling interests. Certification that the average annual gross revenues for the preceding three years do not exceed the applicable limit is not sufficient. A statement of the total gross revenues for the preceding three years is also insufficient. The applicant must provide separately for itself, its affiliates, its controlling interests, and the affiliates of its controlling interests, a schedule of gross revenues for each of the preceding three years, as well as a statement of total average gross revenues for the three-year period. If the applicant is applying as a consortium of small or very small businesses, this information must be provided for each consortium member.

D. Provisions Regarding Defaulters and Former Defaulters (FCC Form 175 Exhibit D)

40. Each applicant must certify on its FCC Form 175 application that it is not in default on any Commission licenses and that it is not delinquent on any non-tax debt owed to any Federal agency. In addition, each applicant must attach to its FCC Form 175 application a statement made under penalty of perjury indicating whether or not the applicant, its affiliates, its controlling interests, or the affiliates of its controlling interest have ever been in default on any Commission licenses or have ever been delinquent on any non-tax debt owed to any Federal agency. The applicant must provide such information for itself, its affiliates, its controlling interests, and the affiliates of its controlling interests, as defined by Section 1.2110 of the Commission's rules. Applicants must include this statement as Exhibit D of the FCC Form 175.

41. ''Former defaulters''—*i.e.*, applicants, including their attributable interest holders, that in the past have defaulted on any Commission licenses or been delinquent on any non-tax debt owed to any Federal agency, but that have since remedied all such defaults and cured all of their outstanding non-

tax delinquencies—are eligible to bid in Auction No. 51, provided that they are otherwise qualified. However, as discussed *infra* in section III.D.iii, former defaulters are required to pay upfront payments that are fifty percent more than the normal upfront payment amounts.

E. Installment Payments

42. Installment payment plans will not be available in Auction No. 51.

F. Other Information (FCC Form 175 Exhibits E and F)

43. Applicants owned by minorities or women, as defined in 47 CFR 1.2110(c)(2), may attach an exhibit (Exhibit E) regarding this status. This applicant status information is collected for statistical purposes only and assists the Commission in monitoring the participation of ''designated entities'' in its auctions. Applicants wishing to submit additional information may do so on Exhibit F.

G. Minor Modifications to Short-Form Applications (FCC Form 175)

44. After the short-form filing deadline (August 8, 2003), applicants may make only minor changes to their FCC Form 175 applications. Applicants will not be permitted to make major modifications to their applications (*e.g.*, change their license selections, change the certifying official or change control of the applicant or change bidding credits). *See* 47 CFR 1.2105. Permissible minor changes include, for example, deletion and addition of authorized bidders (to a maximum of three) and revision of exhibits. Applicants should make these modifications to their FCC Form 175 electronically and submit a letter, briefly summarizing the changes, by electronic mail to the attention of Margaret Wiener, Chief, Auctions and Industry Analysis Division, at the following address: *auction51@fcc.gov*. The electronic mail summarizing the changes must include a subject or caption referring to Auction No. 51. The Bureau requests that parties format any attachments to electronic mail as Adobe® Acrobat® (pdf) or Microsoft® Word documents.

45. A separate copy of the letter should be faxed to the attention of Kathryn Garland at (717) 338–2850.

H. Maintaining Current Information in Short-Form Applications (FCC Form 175)

46. Applicants have an obligation under 47 CFR1.65, to maintain the completeness and accuracy of information in their short-form applications. Amendments reporting substantial changes of possible decisional significance in information contained in FCC Form 175 applications, as defined by 47 CFR 1.2105(b)(2), will not be accepted and may in some instances result in the dismissal of the FCC Form 175 application.

III. Pre-Auction Procedures

A. Auction Seminar

47. On Thursday, July 31, 2003, the FCC will sponsor a free seminar for Auction No. 51 at the Federal Communications Commission, located at 445 12th Street, SW, Washington, DC. The seminar will provide attendees with information about pre-auction procedures, conduct of the auction, the FCC Automated Auction System, and the narrowband PCS and auction rules.

B. Short-Form Application (FCC Form 175)—Due August 8, 2003

48. In order to be eligible to bid in this auction, applicants must first submit an FCC Form 175 application. This application must be submitted electronically and received at the Commission no later than 6 p.m. ET on August 8, 2003. Late applications will not be accepted.

49. There is no application fee required when filing an FCC Form 175.

i. Electronic Filing

50. Applicants must file their FCC Form 175 applications electronically. Applications may generally be filed at any time beginning at noon ET on July 31, 2003, until 6 p.m. ET on August 8, 2003. Applicants are strongly encouraged to file early and are responsible for allowing adequate time for filing their applications. Applicants may update or amend their electronic applications multiple times until the filing deadline on August 8, 2003.

51. Applicants must press the ''SUBMIT Application'' button on the ''Submission'' page of the electronic form to successfully submit their FCC Form 175s. Any form that is not submitted will not be reviewed by the FCC. Information about accessing the FCC Form 175 is included in Attachment C of the *Auction No. 51 Procedures Public Notice*. Technical support is available at (202) 414–1250 (voice) or (202) 414–1255 (text telephone (TTY)); hours of service Monday through Friday, from 8 AM to 6 PM ET. In order to provide better service to the public, all calls to the hotline are recorded.

ii. Completion of the FCC Form 175

52. Applicants should carefully review 47 CFR 1.2105, and must complete all items on the FCC Form 175. Instructions for completing the FCC Form 175 are in Attachment D of the *Auction No. 51 Procedures Public Notice*.

iii. Electronic Review of FCC Form 175

53. The FCC Form 175 electronic review system may be used to locate and print applicants' FCC Form 175 information. There is no fee for accessing this system. *See* Attachment C of the *Auction No. 51 Procedures Public Notice* for details on accessing the review system.

54. Applicants may also view other applicants' completed FCC Form 175s after the filing deadline has passed and the FCC has issued a public notice explaining the status of the applications.

Note: Applicants should not include sensitive information (*i.e.*, TIN/EIN) on any exhibits to their FCC Form 175 applications.

C. Application Processing and Minor Corrections

55. After the deadline for filing the FCC Form 175 applications has passed, the FCC will process all timely submitted applications to determine which are acceptable for filing, and subsequently will issue a public notice identifying: (i) Those applications accepted for filing; (ii) those applications rejected; and (iii) those applications which have minor defects that may be corrected, and the deadline for filing such corrected applications.

D. Upfront Payments—Due August 26, 2003

56. In order to be eligible to bid in the auction, applicants must submit an upfront payment accompanied by an FCC Remittance Advice Form (FCC Form 159). After completing the FCC Form 175, filers will have access to an electronic version of the FCC Form 159 that can be printed and faxed to Mellon Bank in Pittsburgh, PA. All upfront payments must be received at Mellon Bank by 6 p.m. ET on August 26, 2003. For specific details regarding upfront payments, *see* section III. D of the *Auction No. 51 Procedures Public Notice.*

i. Making Auction Payments by Wire Transfer

57. Wire transfer payments must be received by 6 p.m. ET on August 26, 2003. To avoid untimely payments, applicants should discuss arrangements (including bank closing schedules) with their banker several days before they plan to make the wire transfer, and allow sufficient time for the transfer to be initiated and completed before the deadline.

58. Applicants must fax a completed FCC Form 159 (Revised 2/00) to Mellon Bank at (412) 209–6045 at least one hour before placing the order for the wire transfer (but on the same business day). On the cover sheet of the fax, write ''Wire Transfer—Auction Payment for Auction Event No. 51.'' In order to meet the Commission's upfront payment deadline, an applicant's payment must be credited to the Commission's account by the deadline. Applicants are responsible for obtaining confirmation from their financial institution that Mellon Bank has timely received their upfront payment and deposited it in the proper account. Detailed instructions for completion of FCC Form 159 are included in Attachment E of the *Auction No. 51 Procedures Public Notice.*

ii. Amount of Upfront Payment

59. In the *Part 1 Order* the Commission delegated to the Bureau the authority and discretion to determine appropriate upfront payment(s) for each auction. In addition, in the *Part 1 Fifth Report and Order,* the Commission ordered that ''former defaulters,'' *i.e.*, applicants that have ever been in default on any Commission license or have ever been delinquent on any non-tax debt owed to any Federal agency, be required to pay upfront payments fifty percent greater than non-''former defaulters.'' In the *Auction No. 51 Comment Public Notice,* the Bureau proposed that the amount of the upfront payment would determine the initial maximum eligibility (as measured in bidding units) for each bidder. Each license is assigned a specific number of bidding units equal to the upfront payment, on a bidding unit per dollar basis. For a package, the Bureau proposed to calculate the bidding units by adding together the bidding units of the individual licenses that make up the package. In order to bid on a license or package, otherwise qualified bidders that applied for the license(s) on Form 175 must have an eligibility level that meets or exceeds the number of bidding units assigned to the license or package. At a minimum, therefore, an applicant's total upfront payment must be enough to establish eligibility to bid on at least one of the licenses applied for on Form 175, or else the applicant will not be eligible to participate in the auction. An applicant does not have to make an upfront payment to cover all licenses for which the applicant has applied on Form 175, but rather to cover the maximum number of bidding units that are associated with licenses on which the bidder wishes to bid (via bids on licenses and/or packages) at any given time.

60. In the *Auction No. 51 Comment Public Notice,* the Bureau proposed to calculate upfront payments on a license-by-license basis using the following formula:

$.00001 * kHz * License Area Population rounded.

The Bureau received no comments on this issue. Therefore, the Bureau adopts its proposed upfront payments. The specific upfront payments and bidding units for each license are set forth in Attachment A of the *Auction No. 51 Procedures Public Notice.*

61. In calculating its upfront payment amount, an applicant should determine the bidding units of all the licenses it may wish to win at one time and submit an upfront payment covering that number of bidding units. In order to make this calculation, an applicant should add together the upfront payments for all of these licenses. Applicants should check their calculations carefully, as there is no provision for increasing a bidder's maximum eligibility after the upfront payment deadline.

EXAMPLE: UPFRONT PAYMENTS AND BIDDING FLEXIBILITY

Market No.	Channel No.	Market name	Bidding units	Upfront payment
RPC001	17	Northeast	34,000	$34,000
RPC002	17	South	38,000	38,000

If a bidder wishes to bid on both licenses in a round or on a package of both licenses, it must have selected both on its FCC Form 175 and purchased at least 72,000 bidding units (34,000 + 38,000). If a bidder only wishes to bid on one license, but not both, purchasing 38,000 bidding units would meet the requirement for either license. The bidder would be able to bid on either license, *but not both at the same time.* If the bidder purchased only 34,000 bidding units, it would have enough eligibility for the Northeast license but not for the South license.

62. Former defaulters should calculate their upfront payment for all licenses by multiplying the number of bidding units they wish to purchase by 1.5. In order to calculate the number of bidding units to assign to former defaulters, the Commission will divide the upfront payment received by 1.5 and round the result up to the nearest bidding unit.

Note: An applicant may, on its FCC Form 175, apply for every applicable license being offered, but its actual bidding in any round will be limited by the bidding units reflected in its upfront payment.

iii. Applicant's Wire Transfer Information for Purposes of Refunds of Upfront Payments

63. The Commission will use wire transfers for all Auction No. 51 refunds. To ensure that refunds of upfront payments are processed in an expeditious manner, the Commission is requesting that all pertinent information as listed be supplied to the FCC. Applicants can provide the information electronically during the initial short-form filing window after the form has been submitted. Wire Transfer Instructions can also be manually faxed to the FCC, Financial Operations Center, Auctions Accounting Group, ATTN: Gail Glasser or Tim Dates, at (202) 418–2843 by August 26, 2003. All refunds will be returned to the payer of record as identified on the FCC Form 159 unless the payer submits written authorization instructing otherwise. For additional information, please call Gail Glasser at (202) 418–0578 or Tim Dates at (202) 418–0496. Name of Bank, ABA Number, Contact and Phone Number, Account Number to Credit, Name of Account Holder, FCC Registration Number (FRN), Taxpayer Identification Number, Correspondent Bank (if applicable), ABA Number, Account Number.

E. Auction Registration

64. Approximately ten days before the auction, the FCC will issue a public notice announcing all qualified bidders for the auction. Qualified bidders are those applicants whose FCC Form 175 applications have been accepted for filing and have timely submitted upfront payments sufficient to make them eligible to bid on at least one of the licenses for which they applied.

65. All qualified bidders are automatically registered for the auction. Registration materials will be distributed prior to the auction by two separate overnight mailings, one containing the confidential bidder identification number (BIN) and the

other containing the SecurID cards, both of which are required to place bids. These mailings will be sent only to the contact person at the contact address listed in the FCC Form 175.

66. Applicants that do not receive both registration mailings will not be able to submit bids. Therefore, any qualified applicant that has not received both mailings by noon on Monday, September 15, 2003, should contact the Auctions Hotline at (717) 338–2888. Receipt of both registration mailings is critical to participating in the auction, and each applicant is responsible for ensuring it has received all of the registration material.

67. Qualified bidders should note that lost bidder identification numbers or SecurID cards can be replaced only by appearing *in person* at the FCC headquarters, located at 445 12th St., SW, Washington, DC 20554. Only an authorized representative or certifying official, as designated on an applicant's FCC Form 175, may appear in person with two forms of identification (one of which must be a photo identification) in order to receive replacements. Qualified bidders requiring replacements must call technical support prior to arriving at the FCC.

F. Remote Electronic Bidding

68. The Commission will conduct this auction over the Internet, and telephonic bidding will be available as well. As a contingency plan, bidders may also dial in to the FCC Wide Area Network. Qualified bidders are permitted to bid telephonically or electronically. Each applicant should indicate its bidding preference—electronic or telephonic—on the FCC Form 175. In either case, each authorized bidder must have its own SecurID card, which the FCC will provide at no charge. For security purposes, the SecurID cards and the FCC Automated Auction System user manual are only mailed to the contact person at the contact address listed on the FCC Form 175. Each SecurID card is tailored to a specific auction; therefore, SecurID cards issued for other auctions or obtained from a source other than the FCC will not work for Auction No. 51. The telephonic bidding phone number will be supplied in the first overnight mailing, which also includes the confidential bidder identification number.

69. SecurID cards can be recycled, and the Bureau encourages bidders to return the cards to the FCC. The Bureau will provide pre-addressed envelopes that bidders may use to return the cards once the auction is over.

G. Mock Auction

70. All qualified bidders will be eligible to participate in a mock auction on Wednesday, September 17, and Thursday, September 18, 2003. The mock auction will enable applicants to become familiar with the FCC Automated Auction System prior to the auction. Participation by all bidders is strongly recommended. Details will be announced by public notice.

IV. Auction Event

71. The first round of bidding for Auction No. 51 will begin on Wednesday, September 24, 2003. The initial bidding schedule will be announced in a public notice listing the qualified bidders, which is released approximately 10 days before the start of the auction.

A. Auction Structure

i. Simultaneous Multiple Round Auction With Package Bidding

72. In the *Auction No. 51 Comment Public Notice,* the Bureau proposed to award all licenses in Auction No. 51 in a simultaneous multiple round auction with package bidding. The Bureau received no comments on this issue. The Bureau concludes that it is operationally feasible and appropriate to auction the regional narrowband PCS licenses through a simultaneous multiple round auction with package bidding. Unless otherwise announced, bids will be accepted on all individual licenses and on packages of licenses in each round of the auction. The Bureau believes this approach allows bidders to express complementarities among licenses, and the Bureau believes this approach does not unreasonably disadvantage bidders who do not wish to win packages of licenses. The Bureau also believes this approach is administratively efficient.

ii. Maximum Eligibility

73. In the *Auction No. 51 Comment Public Notice,* the Bureau proposed that the amount of the upfront payment submitted by a bidder would determine the initial maximum eligibility (as measured in bidding units) for each bidder. The Bureau received no comments on this issue.

74. For Auction No. 51 the Bureau adopts this proposal. The amount of the upfront payment submitted by a bidder determines the maximum eligibility (in bidding units) for each bidder. The total upfront payment defines the initial maximum number of bidding units on which the applicant will be permitted to bid in a given round. As there is no provision for increasing a bidder's eligibility during the course of an auction, prospective bidders are cautioned to calculate their upfront payments carefully. The total upfront payment does not affect the total dollars a bidder may bid on any given license or package.

iii. Activity Rule

75. In order to ensure that the auction closes within a reasonable period of time, an activity rule provides incentives for bidders to participate throughout the auction. The activity rule requires each bidder to have active bids in each round that account for a specified fraction of the bidder's current eligibility, as measured in bidding units. A bidder that does not satisfy the activity rule will either use an activity rule waiver (if any remain) or lose bidding eligibility for the next round. Losing eligibility matters to bidders because a bidder's bidding activity cannot exceed its current eligibility.

76. In the *Auction No. 51 Comment Public Notice,* the Bureau proposed to measure a bidder's *bidding activity* in a round as the maximum number of bidding units the bidder can win considering new bids placed and provisionally winning bids renewed in that round. Thus, when a bidder submits bids in a round the FCC Automated Auction System will determine the set of bids, among the bidder's new bids and renewed provisionally winning bids, that contains the most bidding units and has no overlap among the licenses. The Bureau also proposed that a bidder be considered active if the bidder has provisionally winning bids from the previous round. A bidder's bids made in different rounds will be considered mutually exclusive, so the bidding units associated with provisionally winning bids must be viewed independently from the bidding units associated with current round bids. The Bureau proposed to define a bidder's *eligibility activity* in a round as the greater of (i) its bidding activity in the round and (ii) the bidding units associated with the bidder's provisionally winning bids from the prior round.

77. For Auction No. 51, we proposed that, in each round of the auction, a bidder desiring to maintain its current eligibility would be required to have eligibility activity equal to sixty percent (three-fifths) of its current eligibility. For a bidder that failed to meet the activity requirement in a given round, the Automated Auction System would reduce the bidder's eligibility for the next round to five-thirds times its eligibility activity in the current round. Thus, a bidder's eligibility in the current

round is equal to either its eligibility in the previous round (bidder met the activity requirement) or five-thirds of its eligibility activity in the previous round (bidder did not meet the activity requirement), whichever is less:

$$\text{Eligibility}(t) = \text{Min}\left(\text{Eligibility}(t-1),\ \tfrac{5}{3} * \text{Eligibility Activity}(t-1)\right)$$

78. Activity rule waivers provide an exception to this rule and are discussed in the next section, ''Activity Rule Waivers and Reducing Eligibility.''

79. In addition, the Bureau proposed to retain the discretion to increase to eighty percent (four-fifths) the proportion of bidding units on which bidders must be active to retain their current eligibility. Any such change will be announced to bidders prior to the beginning of the round in which the change takes effect. For a bidder that failed to meet an eighty percent activity requirement in a given round, the Automated Auction System would reduce the bidder's eligibility for the next round to five-fourths times its eligibility activity in the current round.

Caution: If the Bureau exercises its discretion to increase the activity requirement to eighty percent, bidders must carefully check their current activity during the bidding period of the first round following the change. In past auctions, some bidders have inadvertently lost bidding eligibility or used an activity rule waiver because they did not re-verify their activity after an increase in the activity requirement. Bidders may check their activity against the required activity level by using the bidding system's bidding module.

80. The Bureau received no comments on these proposals. Because employing an activity rule has proven successful in maintaining proper pace in previous auctions, the Bureau adopts its proposal for Auction No. 51.

iv. Activity Rule Waivers and Reducing Eligibility

81. Each bidder will be provided five activity rule waivers that may be used in any round during the course of the auction. Use of an activity rule waiver preserves the bidder's current bidding eligibility despite the bidder's eligibility activity in the current round being below the required level. An activity rule waiver applies to an entire round of bidding and not to a particular license or package.

82. The FCC Automated Auction System assumes that bidders with insufficient eligibility activity would prefer to use an activity rule waiver (if available) rather than lose bidding eligibility. Therefore, the system will automatically apply a waiver (known as an ''automatic waiver'') at the end of any round where a bidder's eligibility activity is below the activity requirement unless: (i) The bidder has no activity rule waivers remaining; or (ii) the bidder overrides the automatic application of a waiver by reducing eligibility, thereby meeting the minimum requirements. If a bidder has no waivers remaining and does not satisfy the activity requirement, its current eligibility will be permanently reduced, possibly eliminating the bidder from further bidding in the auction.

83. A bidder with insufficient activity that wants to reduce its bidding eligibility rather than use an activity rule waiver must affirmatively override the automatic waiver mechanism during the round by using the ''reduce eligibility'' function in the bidding system. In this case, the bidder's eligibility is permanently reduced to bring the bidder into compliance with the activity rules as described in ''Activity Rule'' (*see* section IV.A.iii discussion). Once eligibility has been reduced, a bidder will not be permitted to regain its lost bidding eligibility.

84. Finally, the Bureau adopts its proposal not to permit bidders to submit an activity rule waiver proactively as a means to keep the auction open absent bidding activity.

v. Auction Stopping Rules

85. For Auction No. 51, the Bureau proposed to employ a two-round simultaneous stopping rule; that is, the auction would close after two consecutive rounds with no new bids. The Bureau also proposed that, for purposes of the stopping rule, last and best bids would be considered new bids (*i.e.*, would keep the auction open) but renewed bids would not.

86. In addition, the Bureau proposed that it reserve the right to declare that the auction will end after a designated number of additional rounds (''special stopping rule''). The Bureau proposed to exercise this option only in circumstances such as where the auction is proceeding very slowly, where there is minimal overall bidding activity or where it appears likely that the auction will not close within a reasonable period of time. Before exercising this option, the Bureau is likely to attempt to increase the pace of the auction by, for example, increasing the activity requirement (where bidders will be required to maintain a higher level of bidding activity), increasing the number of rounds per day, and/or adjusting the minimum acceptable bids and bid increments for the licenses.

87. The Bureau received no comment on this issue. The Bureau adopts the proposals. Auction No. 51 will begin under the two-round simultaneous stopping rule, and the Bureau will retain the discretion to invoke the special stopping rule.

vi. Auction Delay, Suspension, or Cancellation

88. Public notice or by announcement during the auction, the Bureau may delay, suspend, or cancel the auction in the event of natural disaster, technical obstacle, evidence of an auction security breach, unlawful bidding activity, administrative or weather necessity, or for any other reason that affects the fair conduct of competitive bidding. Because this approach has proven effective in resolving exigent circumstances in previous auctions, we adopt our proposed auction cancellation rules. In such cases, the Bureau, in its sole discretion, may elect to resume the auction starting from the beginning of the current round, resume the auction starting from some previous round, or cancel the auction in its entirety.

B. Bidding Procedures

i. Round Structure

89. The initial bidding schedule will be announced in the public notice listing the qualified bidders, which is released approximately 10 days before the start of the auction. Each bidding round is followed by the release of round results. Multiple bidding rounds may be conducted in a given day.

90. The FCC has discretion to change the bidding schedule in order to foster an auction pace that reasonably balances speed with the bidders' need to study round results and adjust their bidding strategies. The Bureau may increase or decrease the amount of time for the bidding rounds and review periods, or the number of rounds per day, depending upon the bidding activity level and other factors.

ii. Packages

91. The Bureau proposed that, in addition to bidding on individual licenses, bidders be permitted to create and bid on up to twelve different packages of their own choosing during the course of the auction. A bid on an individual license does not count as a bid on a package; packages consist of two or more licenses. Bidders will not be required to identify or create their packages before the start of the auction, but may create their packages as the auction progresses. A bidder may modify or delete a package it has created up until the point where it has bid on the package and the round has closed. If the bidder submits a bid on a package and subsequently removes the bid during the same round, the bidder has

the option of also deleting or modifying the package. However, once a bidder bids on a package and the round closes, the package may not be modified or deleted and counts as one of the bidder's twelve allowable packages.

92. The Bureau received no comments on this issue. The Bureau adopts the proposals regarding packages.

iii. Reserve Price or Minimum Opening Bid

93. For Auction No. 51, the Bureau proposed the following license-by-license formula for calculating minimum opening bids: $.00001 * kHz * License Area Population, rounded.

94. For a package, the Bureau proposed to calculate the minimum opening bid by adding together the minimum opening bids of the individual licenses that make up the package.

95. The Bureau received no comments on this issue. Consequently, the Bureau adopts its proposed minimum opening bids for Auction No. 51. The minimum opening bids the Bureau adopts for Auction No. 51 are reducible at the discretion of the Bureau. The Bureau emphasizes, however, that such discretion will be exercised, if at all, sparingly and early in the auction, *i.e.*, before bidders lose all waivers and begin to lose substantial eligibility. During the course of the auction, the Bureau will not entertain any requests to reduce the minimum opening bid on specific licenses.

96. The specific minimum opening bids for each license available in Auction No. 51 are set forth in Attachment A of the *Auction No. 51 Procedures Public Notice*.

iv. Minimum Acceptable Bids and Bid Increments

97. In the *Auction No. 51 Comment Public Notice*, the Bureau proposed that in each round, eligible bidders will be able to place bids on a given license or package in any of nine different amounts. The Automated Auction System interface will list the nine acceptable bid amounts for each license and package. In the first round of the auction, the minimum acceptable bid for a license or package will be equal to its minimum opening bid. The Bureau proposed that in all subsequent rounds, the minimum acceptable bid for a license or package will be the greatest of: (i) The minimum opening bid; (ii) the bidder's own previous high bid on a license or package plus x%, where the Bureau will specify the value of x in each round; and (iii) the *current price estimate* of the license plus z%, or for a package, the sum of the current price estimates for the licenses in the package plus z%, where the Bureau will specify the value of z in each round.

98. Current price estimates are estimates of the individual prices of the licenses being auctioned. The estimates take into account the minimum opening bids for the licenses as well as all the bids placed in the auction and, therefore, reflect all available information that has been revealed in the auction about the relative demands for the licenses. For a provisionally winning package, the current price estimates for the licenses that make up the package are set such that the sum of those current price estimates equals the provisionally winning bid on the package. These estimates are generated during round results following every round of the auction as part of the mathematical optimization process used by the Bureau to determine the provisionally winning bids. The precise methodology used to calculate current price estimates is described in Attachment F of the *Auction No. 51 Procedures Public Notice*. Until a bid is placed on a license or on a package containing that license, by any bidder in any round, the current price estimate is the FCC bid amount.

99. The Bureau proposed to retain an exception to part (iii) for calculating the minimum acceptable bid for a ''global'' package—a package consisting of all six of the licenses available in the auction. After the first round of the auction, part (iii) of the minimum acceptable bid rule for a global package will always be the revenue generated by the provisionally winning bid set in the previous round plus w%, where the Bureau will specify the value of w in each round.

100. The result of the minimum acceptable bid calculation will be rounded using our standard rounding procedure. The Bureau proposed to initially set x at ten, z at five and w at five, and to retain the discretion to adjust these variables during the course of the auction.

101. For bids higher than the minimum acceptable bid—*i.e.*, multi-increment bids—the Bureau proposed to define the amount of the additional bid increments as v% of the minimum acceptable bid, where the minimum acceptable bid is determined. The Bureau proposed to initially set v at ten and to retain the discretion to adjust the amount during the course of the auction. Thus, when v equals ten, a bidder will be able to place multi-increment bids of the minimum acceptable bid plus approximately 10%, 20%, etc. with the maximum bid being approximately equal to the minimum acceptable bid plus 80%.

102. The Bureau received no comments on these issues. The Bureau adopts the proposals. The Bureau retains the discretion to change minimum acceptable bids, and to do so on a license-by-license and package-by-package basis, if circumstances so dictate. If the Bureau exercises this discretion, it will announce any change in the Automated Auction System.

v. Winning and Provisionally Winning Bids

103. In the *Auction No. 51 Comment Public Notice,* the Bureau proposed the procedures set forth.

104. *Winning bids* in a package bidding auction are the set of ''consistent'' bids (non-overlapping, and for each winning bidder, only bids made or renewed in the same round) on individual licenses and packages that maximizes total revenue when the auction closes. *Provisionally winning bids* are the set of consistent bids that maximizes total revenue in a particular round (they would win if the auction were to close in that round), assigning each license to either a bidder or the FCC. When determining winning and provisionally winning bids, all bids made in every round throughout the course of the auction (except for bids that are placed and subsequently removed during the same round) will be considered. In addition, each license is treated as having a bid placed by the FCC at $1000 less than the minimum opening bid. This procedure will ensure that a bid on a license or package at the minimum opening bid always beats the FCC bid.

105. Since there can be more than one set of consistent bids that produces the maximum revenue, we proposed to use a procedure that randomly selects among these tied sets when determining the provisionally winning bids. This tie breaking procedure involves two steps: (i) The assignment of a *selection number* to each bid, and (ii) the determination of, among all tied bid sets, the set that produces the *maximum sum of selection numbers.*

106. A bid's *selection number* is the sum of n pseudo-random numbers where n is the number of licenses comprising the bid's package. A bid's selection number will be included in the publicly-available round results released after each round.

107. Selection numbers will be generated for each license in each bid in each round. In the event that more than one set of consistent bids produces the maximum revenue, the second step of the tie breaking procedure will determine the provisionally winning bid set. Computer software will be used to

determine the consistent set that produces the maximum revenue and the maximum sum of selection numbers. Each license in each bid will be assigned a new selection number in every round. Consequently, if there are ties, the set of provisionally winning bids may change even after a round in which there are no new bids. The solver will not be run after the last round of the auction, so that the winning set is the same as the set of provisional winners generated after the next-to-the-last round (*i.e.*, there won't be any surprise winners).

108. Please note that it is possible that a provisionally winning bid might not be the highest bid on the particular license or package. This possibility is primarily due to each bidder's bids being considered mutually exclusive across rounds. For example, if one bidder has placed the highest bid on each of two different licenses in two different rounds (and did not renew the earlier of the two bids), then those two bids are considered as mutually exclusive and only one of them can be a provisionally-winning bid.

109. The Bureau received no comments on these proposals. The Bureau adopts the procedures regarding winning and provisionally winning bids.

vi. Last and Best Bids

110. In the *Auction No. 51 Comment Public Notice,* the Bureau proposed to allow bidders that wish to drop out of the auction or that believe they are about to lose their bidding eligibility to have an opportunity before they drop out to place up to two mutually exclusive sets of ''last and best'' bids on any licenses or packages for which they remain eligible. This is a limited exception to minimum acceptable bids and to click-box bidding. Such bids may be of any amount (in thousand dollar increments) between the bidder's previous high bid on the license or package and the amount of the highest acceptable bid for the license or package in the current round (the eighth increment above the minimum acceptable bid). If a bidder chooses this option, it will not be permitted to make any further bids during the auction.

111. The Bureau received no comments on this issue. Therefore, we adopt our proposal.

vii. Renewed Bids

112. Without regard to the minimum acceptable bid requirement, the Bureau proposed to allow a bidder to ''renew'' in the current round the highest previous bid it made on any license or package; that is, it may resubmit the bid without increasing the amount bid. No eligibility activity or bidding activity is conferred for renewing a non-provisionally winning bid. Renewed provisionally winning bids confer bidding activity (non-renewed provisionally winning bids count toward eligibility activity). Renewed bids will be treated as being made in the current round.

113. Renewals provide bidders a means to ensure that bids from previous rounds are considered *in addition to* the bids placed in the current round. Otherwise, bids made in different rounds are treated as mutually exclusive, so that the bidder may win some or all of the bids from the current round, or a previous round, but not both.

114. The Bureau received no comments on this issue. Therefore, the Bureau adopts its proposal.

viii. Bidding

115. During a round, a bidder may submit new bids or renewed bids for as many licenses and packages as it wishes (subject to eligibility requirements, its FCC Form 175 license selection, and the twelve package limitation); remove bids placed in the same bidding round; or permanently reduce eligibility. Bidders also have the option of making multiple submissions in each round. If a bidder submits multiple bids for a single license or package in the same round, the system takes the last bid entered as that bidder's bid for the round. Bidders should note that the bidding units associated with licenses for which the bidder has removed its bid do not count towards the bidder's activity at the close of the round.

116. Bidding is constrained by the eligibility and activity rules, which determine both minimum and maximum permissible levels of bidding, as measured in bidding units. As previously discussed, minimum bidding, as measured in bidding units, is constrained by the activity rules. In each round, a bidder desiring to maintain its current eligibility and not use an activity rule waiver must be active, based on eligibility activity, on licenses associated with enough bidding units to meet the activity requirement for the current round. For more details, please refer to section IV.A.iii. ''Activity Rule.''

117. Maximum bidding, as measured in bidding units, is constrained by the eligibility rules. *Bidding activity* for a round, defined as the maximum number of bidding units a bidder can win considering new bids and renewed provisionally winning bids placed in that round, cannot exceed current eligibility. That is, when a bidder submits a set of bids in a round, the system will not accept the set of bids if it determines that the bidding activity generated by those bids exceeds the bidder's current eligibility. Bidding in a round is further limited by the requirement that a bidder's *bidding exposure* in a round must be less than or equal to its initial eligibility. Bidding exposure is the maximum number of bidding units a bidder can win considering all the bids (new, renewed provisionally winning or non-provisionally winning) placed in the round. Similarly, when a bidder submits a set of bids in a round, the system will not accept the set of bids if it determines that the bidding exposure generated by those bids exceeds the bidder's initial eligibility. In either case, if a set of bids is rejected, the system will notify the bidder that its bids have not been accepted and report which rule is in violation.

118. Bidders are permitted only to bid on the specific licenses they selected on their FCC Form 175. Any packages they create must be comprised entirely of licenses selected on their Form 175. The bid submission screens are customized using the bidder's Form 175 information, and will not permit bidding on non-selected licenses (or packages of those licenses).

119. Please note that all bidding will take place remotely either through the FCC Automated Auction System or by telephonic bidding. Telephonic bidders are therefore reminded to allow sufficient time to bid by placing their calls well in advance of the close of a round.

120. In order to access the bidding functions of the FCC Automated Auction System, bidders must be logged in during the bidding round using the bidder identification number provided in the registration materials, and the passcode generated by the SecurID card. Bidders are strongly encouraged to print bid confirmations for each round *after* they have completed all of their activity for that round.

121. In each round, eligible bidders will be able to place bids on a given license or package in any of nine different amounts. Bidders may use the drop-down box to select from among the nine bid amounts; to renew any bids (if applicable); or to remove any bids made within the current round.

122. Finally, bidders are cautioned in selecting their bid amounts because, as explained in the following section, bidders are not permitted to withdraw bids from a previous round, even if mistakenly or erroneously made. As explained previously, when

determining winning and provisionally winning bids, the Bureau considers all bids made throughout the course of the auction.

ix. Bid Removal and Bid Withdrawal

123. In the *Auction No. 51 Comment Public Notice,* the Bureau proposed not to allow any bid withdrawals in Auction No. 51. The Bureau received no comments on this issue. Therefore, the Bureau adopts its proposal.

124. Bid Removal Procedures. Before the close of a bidding round, a bidder has the option of removing any bids placed in that round. By using the ''remove bid'' function in the bidding system, a bidder may effectively ''unsubmit'' any bid placed within that round. Removing a bid will affect a bidder's activity for the round in which it is removed, *i.e.*, a bid that is removed does not count towards bidding activity. This procedure will enhance bidder flexibility during the auction, and therefore, the Bureau adopts these procedures for Auction No. 51.

x. Round Results

125. Bids placed during a round will not be made public until the conclusion of that bidding period. After a round closes, the Bureau will compile reports of all bids made in that round, the set of bids considered when determining the current provisionally winning bids, current price estimates, new minimum acceptable bids for all bidders, current provisionally winning bids, and bidder eligibility status (bidding eligibility and activity rule waivers), and post the reports for public access. Reports reflecting bidders' identities for Auction No. 51 will be available before and during the auction. Thus, bidders will know in advance of this auction the identities of the bidders against which they are bidding. Details regarding round results formats and locations will be included in a subsequent public notice.

xi. Auction Announcements

126. The FCC will use auction announcements to announce items such as schedule changes. All FCC auction announcements will be available by clicking a link on the FCC Automated Auction System.

xii. Default

127. The Commission recently adopted a special rule for calculating default payments in connection with package bidding. In the event a winning bidder defaults on payments due after an auction closes or is disqualified after the auction, a default payment will be assessed. The default payment will consist of a deficiency portion and an additional 25% payment. The special default rule is modeled on the default rule used in other auctions. However, there are substantial differences, perhaps most significantly in the amount of the additional payment. The default rule used in other auctions sets the additional payment at three percent (3%) of the lesser of the subsequent winning bid and the defaulted bid. In contrast, the default rule for use with package bidding sets the additional payment at twenty-five percent (25%) of the lesser of the subsequent winning bid and the defaulted bid.

128. The deficiency portion will make up any loss to the Commission that results when defaulted bid(s) are replaced by subsequent winning bid(s). If the subsequent winning bid(s) exceed the defaulted bid(s), no deficiency portion will be assessed. Even in the absence of a deficiency portion, however, an additional 25% payment will be due. Where a defaulting bidder held winning bids on individual licenses (*i.e.*, not as part of a package), and in a subsequent auction the licenses are also won individually, the deficiency portion will be calculated by subtracting the subsequent winning bid from the defaulted bid. The deficiency portion for such bids will be calculated on a license-by-license basis (*i.e.*, in the event of defaults on multiple bids, the differences between the amounts originally bid and the amounts subsequently bid will not be aggregated to determine a net amount owed).

129. Where a defaulting bidder won licenses in package(s), and in a subsequent auction the licenses are won either (a) In the same package(s), or (b) in smaller packages or as individual licenses that correlate to the defaulted package(s), the deficiency portion will be determined on a package-by-package basis. In the event a defaulting bidder defaults on more than one such bid, the differences between the amount originally bid and the amount(s) subsequently bid will not be aggregated to determine a net amount owed. Thus, in this situation, the deficiency portion will be calculated in a manner analogous to where the licenses are sold individually. However, with regard to each individual package, where the licenses are subsequently sold individually or as part of smaller packages, the amounts received in the subsequent auction will be aggregated in order to determine any deficiency.

130. Where a defaulting bidder or bidders won licenses either individually or as part of packages, and in a subsequent auction the licenses are won as larger packages or different packages (not including the situation described in the preceding paragraph), the deficiency portion will be calculated by subtracting the aggregate amount originally bid for the licenses from the aggregate amount bid in the subsequent auction for the licenses. Thus, in this situation, the deficiency portion will not be calculated on a bid-by-bid basis.

131. If, in a situation requiring that bids be aggregated in order to determine the deficiency portion of the default payments for the bids, there are multiple defaulting bidders, the default payment (both the deficiency portion and the additional 25% payment portion) will be allocated to the defaulting bidders in proportion to their share of the aggregated default bids.

132. In the event that a bidding credit applies to any applicable bid(s), the Bureau will assess the deficiency portion of the default payment using the lesser of the difference between gross bids and the difference between net bids. (In the event that a bidder does not have a bidding credit, the bidder's gross bid and net bid are the same.) In other words, the Bureau will compare (i) The sum of the gross defaulted Auction No. 51 bid(s) minus the gross subsequent winning bid(s) and (ii) the sum of the net defaulted Auction No. 51 bid(s) minus the net subsequent winning bid(s). The Bureau will impose the lesser of (i) and (ii) as the deficiency portion.

133. As noted at the outset, the default payment consists of the deficiency portion and an additional 25% payment. The additional payment will be 25% of the lesser of the subsequent winning bid(s) and the defaulted bid(s). The Bureau will use the same gross or net bid(s) that it used to calculate the deficiency portion when assessing the additional 25% payment. That is, the Bureau will compare the defaulted and subsequent bid(s) according to the methods described for calculation of the deficiency portion of the default payment when determining whether the defaulted bid(s) or the subsequent winning bid(s) is the lesser amount. Should there be no difference between the gross or net bid(s) for purposes of assessing the deficiency portion, the Bureau will assess the additional 25% payment using the lesser of the gross or net bid(s).

xiii. Maintaining the Accuracy of FCC Form 175 Information

134. As noted in section II.G, after the short-form filing deadline, applicants may make only minor changes to their FCC Form 175 applications. Applicants must make these modifications to their FCC Form 175 electronically and submit

a letter, briefly summarizing the changes, by electronic mail to the attention of Margaret Wiener, Chief, Auctions and Industry Analysis Division at the following address: *auction51@fcc.gov.* The electronic mail summarizing the changes must include a subject or caption referring to Auction No. 51. The Bureau requests that parties format any attachments to electronic mail as Adobe® Acrobat® (pdf) or Microsoft® Word documents.

135. A separate copy of the letter should be faxed to the attention of Kathryn Garland at (717) 338–2850. Questions about other changes should be directed to Christopher Shields of the Auctions and Industry Analysis Division at (202) 418–0660.

V. Post-Auction Procedures

A. Down Payments

136. After bidding has ended, the Commission will issue a public notice declaring the auction closed, identifying winning bidders and down payments due.

137. Within ten business days after release of the auction closing notice, each winning bidder must submit sufficient funds (in addition to its upfront payment) to bring its total amount of money on deposit with the Commission for Auction No. 51 to 20 percent of its net winning bids (actual bids less any applicable small or very small business bidding credits).

B. Auction Discount Voucher

138. On June 8, 2000, the Commission awarded Qualcomm, Inc. a transferable Auction Discount Voucher (''ADV'') in the amount of $125,273,878.00. Subject to the terms and conditions set forth in the Commission's Order, Qualcomm or its transferee could use this ADV, in whole or in part, to adjust a winning bid in any spectrum auction prior to June 8, 2003. On April 28, 2003, the Bureau granted Qualcomm an additional year, until June 8, 2004, to use the remaining amount of its ADV. Qualcomm transferred $10,848,000.00 of the ADV to a winning bidder in FCC Auction No. 35. The transferee used this amount to pay a portion of one of its winning bids in Auction No. 35. Qualcomm also transferred $50,536,998.75 of the ADV to an assignee of broadband PCS licenses that requests this amount be applied to pay the unpaid principal and interest accrued on the licenses. The remaining $63,888,879.25 of Qualcomm's ADV could be used to adjust winning bids in another FCC Auction, including Auction No. 51.

C. Long-Form Application (FCC Form 601)

139. Within ten business days after release of the auction closing notice, winning bidders must electronically submit a properly completed long-form application (FCC Form 601) and required exhibits for each license won through Auction No. 51. Winning bidders that are small or very small businesses must include an exhibit demonstrating their eligibility for small or very small business bidding credits. *See* 47 CFR 1.2112(b). Further filing instructions will be provided to auction winners at the close of the auction.

D. Ownership Disclosure Information Report (FCC Form 602)

140. At the time it submits its long-form application (FCC Form 601), each winning bidder also must comply with the ownership reporting requirements as set forth in 47 CFR 1.913, 1.919, and 1.2112. Applicants are reminded that the FCC Form 602 must now be filed electronically. Accordingly, forms filed manually will not be accepted. Winning bidders without a current Form 602 already on file with the Commission must submit a properly completed Form 602 at the time they submit their long-form applications. Further filing instructions will be provided to auction winners at the close of the auction.

E. Tribal Land Bidding Credit

141. A winning bidder that intends to use its license(s) to deploy facilities and provide services to federally-recognized tribal lands that are unserved by any telecommunications carrier or that have a telephone service penetration rate equal to or below 70 percent is eligible to receive a tribal land bidding credit as set forth in 47 CFR 1.2107 and 1.2110(f). A tribal land bidding credit is in addition to, and separate from, any other bidding credit for which a winning bidder may qualify.

142. Unlike other bidding credits that are requested prior to the auction, a winning bidder applies for the tribal land bidding credit after winning the auction when it files its long-form application (FCC Form 601). When filing the long-form application, the winning bidder will be required to advise the Commission whether it intends to seek a tribal land bidding credit, for each market won in the auction, by checking the designated box(es). After stating its intent to seek a tribal land bidding credit, the applicant will have 90 days from the close of the long-form filing window to amend its application to select the specific tribal lands to be served and provide the required tribal government certifications. Licensees receiving a tribal land bidding credit are subject to performance criteria as set forth in 47 CFR 1.2110(f).

143. For additional information on the tribal land bidding credit, including how the amount of the credit is calculated, applicants should review the Commission's rule making proceeding regarding tribal land bidding credits and related public notices. Relevant documents can be viewed on the Commission's Web site by going to *http://wireless.fcc.gov/auctions* and clicking on the *Tribal Land Credits* link.

F. Default and Disqualification

144. Any high bidder that defaults or is disqualified after the close of the auction (*i.e.*, fails to remit the required down payment within the prescribed period of time, fails to submit a timely long-form application, fails to make full payment, or is otherwise disqualified) will be subject to the payments described in 47 CFR 1.2104(g)(2). In such event the Commission may re-auction the license or offer it to the next highest bidder (in descending order) at their final bid. In addition, if a default or disqualification involves gross misconduct, misrepresentation, or bad faith by an applicant, the Commission may declare the applicant and its principals ineligible to bid in future auctions, and may take any other action that it deems necessary, including institution of proceedings to revoke any existing licenses held by the applicant.

G. Refund of Remaining Upfront Payment Balance

145. All applicants that submitted upfront payments but were not winning bidders for a license in Auction No. 51 may be entitled to a refund of their remaining upfront payment balance after the conclusion of the auction. All refunds will be returned to the payer of record, as identified on the FCC Form 159, unless the payer submits written authorization instructing otherwise.

146. At the end of the auction, those bidders who are eligible for a refund must submit a written refund request. If you have completed the refund instructions electronically, then only a written request for the refund is necessary. If not, the request must also include wire transfer instructions, Taxpayer Identification Number (TIN) and FCC Registration Number (FRN). Send refund request to: Federal Communications Commission, Financial Operations Center, Auctions Accounting Group, Gail Glasser or Tim Dates, 445 12th Street, SW., Room 1–C863, Washington, DC 20554.

147. Bidders are encouraged to file their refund information electronically using the refund information portion of the FCC Form 175, but bidders can also fax their information to the Auctions Accounting Group at (202) 418–2843. Once the information has been approved, a refund will be sent to the party identified in the refund information.

Note: Refund processing generally takes up to two weeks to complete. Bidders with questions about refunds should contact Gail Glasser at (202) 418–0578 or Tim Dates at (202) 418–0496.

Federal Communications Commission.

Margaret Wiener,

Chief, Auctions and Industry Analysis Division.

[FR Doc. 03–19485 Filed 7–29–03; 8:45 am]

BILLING CODE 6712–01–P

FEDERAL MARITIME COMMISSION

Notice of Agreement(s) Filed

The Commission hereby gives notice of the filing of the following agreement(s) under the Shipping Act of 1984. Interested parties can review or obtain copies of agreements at the Washington, DC, offices of the Commission, 800 North Capitol Street, NW., Room 940. Interested parties may submit comments on an agreement to the Secretary, Federal Maritime Commission, Washington, DC 20573, within 10 days of the date this notice appears in the **Federal Register**.

Agreement No.: 010099–039.

Title: International Council of Containership Operators.

Parties: A.P. Moller-Maersk Sealand; ANL Limited; American President Lines, Ltd.; APL Co. Pte. Ltd.; Atlantic Container Line AB; Australia-New Zealand Direct Line; Canada Maritime Limited; Cast Line Limited; CMA CGM, S.A.; Companhia Libra de Navegacao; Compania Sud-Americana de Vapores S.A.; Contship Containerlines; COSCO Container Lines Company Limited; CP Ships; Crowley Maritime Corporation; Evergreen Marine Corporation, Ltd.; Hamburg-Sud; Hanjin Shipping Co., Ltd.; Hyundai Merchant Marine Co., Ltd.; Italia di Navigazione, S.p.A.; Kawasaki Kisen Kaisha, Ltd.; Lykes Lines Limited, LLC; Malaysian International Shipping Company S.A.; Mediterranean Shipping Company S.A.; Mitsui O.S.K. Lines, Ltd.; Montemar Maritima S.A.; Neptune Orient Lines, Ltd.; Nippon Yusen Kaisha; Norasia Container Lines Limited; Orient Overseas Container Line, Limited; Pacific International Lines (Pte.) Ltd.; P&O Nedlloyd B.V.; P&O Nedlloyd Limited; Senator Lines GmbH; TMM Lines Limited, LLC; United Arab Shipping Company; Wan Hai Lines Ltd.; Zim Israel Navigation Co., Ltd.

Synopsis: The amendment removes Senator Lines as a participating party to the agreement.

Agreement No.: 011823–003.

Title: Contship/P&O Nedlloyd Vessel Sharing Agreement.

Parties: P&O Nedlloyd Limited/P&O Nedlloyd B.V. (as one party) Contship Containerlines, a division of CP Ships (UK) Limited.

Synopsis: The amendment adds provisions relating to the sale or sub-charter of unused capacity on an *ad hoc* basis to third parties and the sale of slots to (or slot purchases from) third parties on a more significant and permanent basis.

Dated: July 25, 2003.

By Order of the Federal Maritime Commission.

Bryant L. VanBrakle,

Secretary.

[FR Doc. 03–19420 Filed 7–29–03; 8:45 am]

BILLING CODE 6730–01–P

FEDERAL RESERVE SYSTEM

Notice of Proposals to Engage in Permissible Nonbanking Activities or to Acquire Companies that are Engaged in Permissible Nonbanking Activities

The companies listed in this notice have given notice under section 4 of the Bank Holding Company Act (12 U.S.C. 1843) (BHC Act) and Regulation Y (12 CFR Part 225) to engage *de novo*, or to acquire or control voting securities or assets of a company, including the companies listed below, that engages either directly or through a subsidiary or other company, in a nonbanking activity that is listed in § 225.28 of Regulation Y (12 CFR 225.28) or that the Board has determined by Order to be closely related to banking and permissible for bank holding companies. Unless otherwise noted, these activities will be conducted throughout the United States.

Each notice is available for inspection at the Federal Reserve Bank indicated. The notice also will be available for inspection at the offices of the Board of Governors. Interested persons may express their views in writing on the question whether the proposal complies with the standards of section 4 of the BHC Act. Additional information on all bank holding companies may be obtained from the National Information Center website at www.ffiec.gov/nic/.

Unless otherwise noted, comments regarding the applications must be received at the Reserve Bank indicated or the offices of the Board of Governors not later than August 13, 2003.

A. Federal Reserve Bank of New York (Jay Bernstein, Bank Supervision Officer) 33 Liberty Street, New York, New York 10045-0001:

1. Banco Bilbao Vizcaya Argentaria, S.A., Bilbao, Spain, and Grupo Financiero BBVA Bancomer, S.A., DE C.V., Mexico City, Mexico; to engage *de novo* through its subsidiaries, Bancomer Transfer Services, Inc., Houston, Texas; BBVA Bancomer Foreign Exchange, Inc., Houston, Texas; Bancomer Financial Services, Inc., Houston, Texas; and Bancomer Payment Services, Inc., Houston, Texas, in domestic and international money transmission, (*Popular, Inc.*, 84 Fed. Res. Bull. 481 (1997) (Popular) and *Norwest Corp.*, 81 Fed. Res. Bull. 974 (1995) and 81 Fed. Res. Bull. 1130 (1995)); check cashing, *Popular and Midland Bank, PLC*, 76 Fed. Res. Bull. 860, 863 (1990)), and in bill payments, (*Popular and BancOne Corp.*, 80 Fed. Res. Bull. 139 (1994)), and to engage in issuing and selling money orders, traveler's checks, and prepaid telephone cards, pursuant to section 225.28(b)(13), and buying and selling foreign exchanges agent and as principal, pursuant to sections 225.28(b)(7) and (8)(ii)(A) of Regulation Y.

Board of Governors of the Federal Reserve System, July 24, 2003.

Robert deV. Frierson,

Deputy Secretary of the Board.

[FR Doc.03–19292 Filed 7–29–03; 8:45 am]

BILLING CODE 6210–01–S

FEDERAL RESERVE SYSTEM

Sunshine Act Meeting

AGENCY HOLDING THE MEETING: Board of Governors of the Federal Reserve System.

TIME AND DATE: 11:30 a.m., Monday, August 4, 2003.

PLACE: Marriner S. Eccles Federal Reserve Board Building, 20th and C Streets, NW., Washington, DC 20551.

STATUS: Closed.

MATTERS TO BE CONSIDERED:

1. Personnel actions (appointments, promotions, assignments, reassignments, and salary actions) involving individual Federal Reserve System employees.

2. Any items carried forward from a previously announced meeting.

FOR MORE INFORMATION PLEASE CONTACT: Michelle A. Smith, Assistant to the Board; 202–452–2955.

SUPPLEMENTARY INFORMATION: You may call 202–452–3206 beginning at approximately 5 p.m. two business days before the meeting for a recorded announcement of bank and bank holding company applications scheduled for the meeting; or you may contact the Board's Web site at *http://www.federalreserve.gov* for an electronic announcement that not only lists applications, but also indicates procedural and other information about the meeting.

Dated: July 25, 2003.

Robert deV. Frierson,

Deputy Secretary of the Board.

[FR Doc. 03–19460 Filed 7–25–03; 4:37 pm]

BILLING CODE 6210–01–M

GENERAL SERVICES ADMINISTRATION

[FMR Bulletin 2003–B4]

Federal Management Regulation; Redesignations of Federal Buildings

AGENCY: Public Buildings Service (P), GSA.

ACTION: Notice of a bulletin.

SUMMARY: The attached bulletin announces the redesignations of eleven (11) Federal Buildings.

EXPIRATION DATE: This bulletin expires October 28, 2003.

However, the building redesignations announced by this bulletin will remain in effect until canceled or superseded.

FOR FURTHER INFORMATION CONTACT: Paul Chistolini, General Services Administration, Public Buildings Service (P), Washington, DC 20405; telephone (202) 501–1100, e-mail, *paul.chistolini@gsa.gov.*

Dated: June 23, 2003.

Stephen A. Perry,

Administrator of General Services.

General Services Administration

[FMR Bulletin 2003–B4]

Federal Management Regulation; Redesignations of Federal Buildings

To: Heads of Federal Agencies

Subject: Redesignations of Federal Buildings

1. What is the purpose of this bulletin? This bulletin announces the redesignations of 11 Federal Buildings.

2. When does this bulletin expire? This bulletin expires October 28, 2003. However, the building redesignations announced by this bulletin will remain in effect until canceled or superseded.

3. Redesignations. The former and new names of the buildings being redesignated are as follows:

Former name	New name
Federal Building, 5500 Veterans Drive, Charlotte Amalie, VI 00801	Ron de Lugo Federal Building, 5500 Veterans Drive, Charlotte Amalie, VI 00801
Federal Building, 143 West Liberty Street, Medina, OH 44256	Donald J. Pease Federal Building, 143 West Liberty Street, Medina, OH 44256
Federal Building and United States Courthouse, 501 Bell Street, Alton, IL 62002	William L. Beatty Federal Building and United States Courthouse, 501 Bell Street Alton, IL 62002
Federal Building and United States Courthouse, 400 North Main Street, Butte, MT 59701	Mike Mansfield Federal Building and United States Courthouse, 400 North Main Street, Butte, MT 59701
Federal Building and United States Courthouse, 2015 15th Street, Gulfport, MS 39501	Judge Dan M. Russell, Jr. Federal Building and United States Courthouse, 2015 15th Street Gulfport, MS 39501
United States Courthouse, 100 Federal Plaza, Central Islip, NY 11722	Alfonse M. D'Amato United States Courthouse, 100 Federal Plaza, Central Islip, NY 11722
Federal Building and United States Courthouse, 10 East Commerce Street, Youngstown, OH 44503	Nathaniel R. Jones Federal Building and United States Courthouse, 10 East Commerce Street, Youngstown, OH 44503
United States Courthouse, 600 West Capitol Avenue, Little Rock, AR 72201	Richard Sheppard Arnold United States Courthouse, 600 West Capitol Avenue, Little Rock, AR 72201
United States Courthouse, 501 West 10th Street, Ft. Worth, TX 76102	Eldon B. Mahon United States Courthouse, 501 West 10th Street, Ft. Worth, TX 76102
Memorial Building, 1244 Speer Boulevard, Denver, CO 80204	Cesar E. Chavez Memorial Building, 1244 Speer Boulevard, Denver, CO 80204
Federal Building, 290 Broadway, New York, NY 10007	Ted Weiss Federal Building, 290 Broadway, New York, NY 10007

4. Who should we contact for further information regarding redesignations of these Federal Buildings?

General Services Administration, Public Buildings Service, Office of the Commissioner, Attn: Paul Chistolini, 1800 F Street, NW., Washington, DC 20405. Telephone Number: (202) 501–1100, E-mail Address: *paul.chistolini@gsa.gov*

[FR Doc. 03–19426 Filed 7–29–03; 8:45 am]

BILLING CODE 6820–23–P

DEPARTMENT OF HEALTH AND HUMAN SERVICES

Health Resources and Services Administration

[HRSA–03–040]

Fiscal Year 2003 Competitive Application Cycle for Health Center Network Planning and Development Grants; CFDA Number 93.224

AGENCY: Health Resources and Services Administration, HHS.

ACTION: Notice of availability of funds.

SUMMARY: The Health Resources and Services Administration (HRSA) announces the availability of up to $7,900,000 for fiscal year 2003 to support: (1) The planning and development of practice management networks or managed care networks or plans through the Integrated Services Development Initiative (ISDI); (2) development of an integrated management information system through the Shared Integrated Management Information System program (SIMIS); and (3) development of a technology infrastructure to integrate uniform technical information with business systems and care management through integrated information communication and technology development projects (ICT).

Authorizing Legislation: Section 330(c)(1)(B) of the Public Health Service Act (Act), as amended, authorizes support to health centers to plan and develop a managed care network or plan. Section 330(c)(1)(C) of the Act authorizes support for the planning and development of practice management networks.

DATES: The timelines for application receipt, review, and award are as follows:

Application Deadline: August 29, 2003.

Grant awards announced: September 28, 2003.

Applications will be considered on time if they are received by 5 p.m. Eastern Standard Time on August 29, 2003, or before the established deadline date. Applications that are not received by the deadline will be returned to the applicant.

Applicants should note that HRSA is accepting grant applications online in the last quarter of the Fiscal Year (July through September). Please refer to the HRSA grants schedule at *http://www.hrsa.gov/grants.htm* for more information.

How To Request and Where To Send an Application: To obtain a complete application kit, (*i.e.*, application instructions, necessary forms, and application review criteria), call toll free 1–877–HRSA–123 (1–877–477–2123). When contacting the HRSA Grants Application Center (GAC) please refer to the program announcement number HRSA–03–040 and the name of this program. An original and two copies of the applications must be submitted to the HRSA GAC: HRSA Grants Application Center, 901 Russell Avenue, Suite 450, Gaithersburg, Maryland 20879, Fax: 1–877–HRSA–345 (1–877–477–2345), e-mail: *hrsagac@hrsa.gov*.

Applicants will receive a letter acknowledging receipt of their applications.

Eligible Applicants: The following entities are eligible to apply for funding under this announcement:

1. A health center that has received section 330(e) funding for 2 consecutive years is eligible to apply for funding for the planning and development of a managed care network and plan under the ISDI program.

2. Health centers (Community Health Center, Migrant Health Center, Health Care for the Homeless, Public Housing Primary Care and School-Based Health Centers) that receive assistance under section 330 are eligible to apply for funding for the planning and development of a practice management network under the ISDI project.

3. Health centers (Community Health Center, Migrant Health Center, Health Care for the Homeless, Public Housing Primary Care and School-Based Health Centers) that receive assistance under section 330 or Primary Care Associations receiving support under section 330(m) that are applying on behalf of health centers in a State or marketplace are eligible to apply for funding for an integrated management information system.

4. A health center (Community Health Center, Migrant Health Center, Health Care for the Homeless, Public Housing Primary Care and School-Based Health Centers) that has received assistance under section 330 or a Primary Care Association receiving support under section 330(m) that is applying on behalf of health centers in a State or marketplace is eligible to apply for funding for an integrated information and communication technology development project.

Matching or Cost Sharing Requirement: Grantees must provide at least 20 percent (for planning grants) or 40 percent (for developmental grants) of the total approved costs of the project. The total approved cost of the project is the sum of the HRSA share and the non-Federal share. Applications must demonstrate that at least 5 percent (for planning grants) or 10 percent (for developmental grants) of the cost sharing requirement is met through cash contributions for planning or development projects respectively. The remaining non-Federal share may be met by cash or in-kind contributions.

Application Review and Funding Criteria: All eligible applications that are responsive to the requirements and received in time for orderly processing will be reviewed by an Objective Review Committee comprised of non-Federal reviewers using the following review criteria:

ISDI Planning Projects

1. Appropriateness in meeting expectations of the ISDI—extent to which the application effectively promotes the integration and coordination of primary care across business and clinical functions through the planning phase.

2. Readiness for Network Development—the extent to which the application demonstrates both an appropriate multi-year strategic planning process and financial plan.

3. Strength of Proposed Collaboration—extent to which the application demonstrates that all health centers in the marketplace are collaborating in the planning project.

4. Capacity of the Network to Integrate—extent to which the application demonstrates that network members are planning to collaborate, share, and/or integrate functions or components of their systems.

5. Appropriateness to State Environment and Marketplace—the extent to which the applications demonstrates how the project will strengthen the position of health centers in the state environment and/or market place.

ISDI Developmental Projects

1. Appropriateness in meeting expectations of the ISDI—extent to which the application effectively promotes the integration and coordination of primary care across business and clinical functions among network members.

2. Readiness for Network Development—the extent to which the application demonstrates both an appropriate multi-year strategic planning process and commitment (as evidenced by the contribution of time, resources, cash, etc.) by each of the collaborators in the strategic planning process, work plan, budget spreadsheet, and memorandum of agreement.

3. Strength of Proposed Collaboration—extent to which the application demonstrates that all health centers in the marketplace are collaborating, including, the level of involvement of key management staff, clinical personnel, boards among the network members in the development, implementation and/or performance of the project.

4. Capacity of the Network to Integrate—extent to which the application demonstrates that network members will collaborate, share, and/or integrate functions or components of their systems.

5. Appropriateness to State Environment and Marketplace—the extent to which the application demonstrates how the network will strengthen the position of health centers in the state environment and/or marketplace.

SIMIS Projects

1. Readiness for SIMIS Development—extent to which the application demonstrates that it has a multi-year strategic planning process that provides the network's initial assessments, including completed market and organizational assessments, agreement among the network members on the mission, goals, objectives and timetable for the project, and planning for the SIMIS.

2. Strength of Proposed Collaboration—extent to which all health centers in the State are collaborating, including the extent to which: (a) Key management staff of the network members are involved in the development, implementation and/or performance of the project; (b) the proposed project is suited to the organizational/administrative capacity of the network members based on the organizational assessment; and (c) economies of scale are achieved by the other than information system means, *e.g.*, centralized billing/collection.

3. Technical Capacity of the Network to Integrate—extent to which: (a) Network members will collaborate, share, and/or integrate functions or components of their systems to facilitate centralize data integration (*e.g.*, common business rules/practices, data structure, practice management software); and (b) current business and clinical practices will be altered or

improved as a result of the SIMIS network.

ICT Projects

1. Effectiveness—extent to which application describes how health outcomes and systems of care would be improved through integrating the health disparities collaborative care model with information and communications technology.

2. Efficiency—extent to which application demonstrates how inefficiencies such as lost medical records, lab results, and ineffective appointment systems will be eliminated through combining information and communications technology with the care model.

3. Safety and Risk Management—extent to which application demonstrates how decision support would be used throughout the delivery system; such as how primary care provider order entry will prevent medication or lab errors.

4. Patient-Family Centeredness—extent to which the application documents how patients will be connected to their health information and describes support/educational tools, such as disease management patient information and on-line support groups.

5. Equity—extent to which the application demonstrates that all populations, including racial and ethnic minorities and uninsured populations, are receiving high quality care and care that is customized to meeting their needs.

6. Timeliness—extent to which the application demonstrates electronic communication between providers and clinicians, for example, a cutting edge appointment system developed for rapid responses to patient needs.

Funding Preference: A funding preference is defined as the funding of a specific category or group of approved applications ahead of other categories of applications. A preference will be given to approved applications proposing to serve sparsely populated rural or frontier areas.

Funding Priorities

A funding priority is defined as the favorable adjustment of aggregate review scores of individually approved applications. Applications for grant support may be submitted without requesting a funding priority; however, approval of a funding priority will enhance an applicant's competitive score.

ISDI, SIMIS and ICT Projects

1. Programs Demonstrating Appropriate Use of Technological Improvements

Because significant efficiencies in the delivery of health care services can be realized through the appropriate use of technological improvements, a priority will be placed on applications that incorporate such improvements to enhance the quality of care, increase the efficiency and effectiveness of operations, and reduce costs. Applicants are encouraged to consider how their proposals might use telehealth and/or new emerging technologies to achieve their project goals. The advent of communication tools such as distance learning, remote patient monitoring, personal data assistants (PDAs), interactive video, satellite broadcasting, and store-and-forward technology are just some of the many health-care focused technological applications that can help improve access to care either directly or indirectly by improving the efficiency of health care providers. Applicants that propose such improvements will receive 2 additional points.

ICT Projects Only

Priority will be given to those applicants with public/private collaborators with an existing track record in the development or support of ICT, networks, and health disparities collaboratives for health centers working collaboratively with the State PCA. Applicants meeting this priority will receive 3 additional points.

Priority will be given to projects that address a technical methodology and approach that meets current technology capabilities and marketplace standards, as specified by the two BPHC documents, Functional Requirements for Practice Management Systems and Functional Requirements for Electronic Medical Records (available on Web site: *http://www.bphc.hrsa.gov/chc/*). Applicants meeting this priority will receive 3 additional points.

Estimated Amount of Available Funds: For fiscal year 2003, approximately $600,000 will be available for ISDI planning projects; approximately $1,800,000 will be available to support ISDI development projects; approximately $2,500,000 will be available through the SIMIS; and approximately $3,000,000 will be available to support ICT development projects.

Estimated Project Period: ISDI Planning Projects—up to 2 years; ISDI Development Projects—up to 4 years; SIMIS Projects—up to 3 years; and ICT Projects—up to 3 years.

Estimated Number of Awards: It is anticipated that the following number of awards will be made: ISDI Planning Projects—3 to 6 awards; ISDI Development Projects—10 to 15 awards; SIMIS Projects—4 to 6 awards; and ICT Projects—up to 5 awards.

Estimated Average Size of Each Award: The estimated costs are expected to vary considerably. Award will range from $75,000 to $200,000 for ISDI Planning Projects;—$150,000–$525,000 for ISDI Developmental Projects; $150,000 to $500,000 for SIMIS Projects and $450,000 to $750,000 for ICT Projects.

FOR FURTHER INFORMATION CONTACT: Applicants may contact the following individuals:

For ISDI: Lisa Dolan-Branton at *LDolan@hrsa.gov* or (301) 594–4306.

For SIMIS: Jayne Bertovich at *JBertovich@hrsa.gov* or (301) 594–4318.

For ICT: Lisa Dolan-Branton at *LDolan@hrsa.gov* or (301) 594–4306.

Paperwork Reduction Act: The application for the Integrated Services Development Initiative has been approved by the Office of Management and Budget (OMB) under the Paperwork Reduction Act. The OMB clearance number is 0920–0428.

Public Health System Reporting Requirements: Under these requirements (approved by the Office of Management and Budget under OMB number 0937–0195), a community-based non-governmental applicant must prepare and submit a Public Health System Impact Statement to the head of the appropriate State and local health agencies in the area(s) to be impacted no later than the Federal application receipt due date. This statement must include:

1. A copy of the face page of the application (SF 424) and

2. A summary of the project, not to exceed one page, which provides:

a. A description of the population to be served,

b. A summary of the services to be provided, and

c. A description of the coordination planned with the appropriate State and local health agencies.

Executive Order 12372: These programs have been determined to be subject to the provisions of Executive Order 12372 concerning intergovernmental review of Federal programs by appropriate health planning agencies, as implemented by 45 CFR part 100. Executive Order 12372 allows States the option of setting up a system for reviewing applications from within their States for assistance under

certain Federal programs. The application packages pursuant to this notice will contain a listing of States with review systems and will provide a single point of contact (SPOC) in the State for review. A list of SPOC contacts is also available at *http://www.whitehouse.gov/omb/grants/spoc.html.* Applicants (other than federally-recognized Indian tribal governments) should contact their SPOCs as early as possible to alert them to the prospective applications and receive any necessary instructions on the State process. For proposed projects serving more than one State, the applicant is advised to contact the SPOC of each affected State.

Except in unusual circumstances, the due date for State process recommendations is at least 60 days from the deadline date established by the Secretary. 45 CFR 100.8(a)(2). In this instance, there are less that 90 days before the end of the 2003 fiscal year (on September 30, 2003). Due to this unusual circumstance, HRSA is establishing a 30-day due date for State process recommendations, to assure timely consideration of such recommendations. The granting agency does not guarantee that it will accommodate or explain its responses to State process recommendations received after the due date. (See ''Intergovernmental Review of Federal Programs,'' Executive Order 12372, and 45 CFR part 100, for a description of the review process and requirements.)

Dated: July 25, 2003.

Dennis P. Williams,

Deputy Administrator.

[FR Doc. 03–19504 Filed 7–28–03; 1:43 pm]

BILLING CODE 4165–15–P

DEPARTMENT OF HEALTH AND HUMAN SERVICES

National Institutes of Health

National Center for Research Resources; Notice of Closed Meetings

Pursuant to section 10(d) of the Federal Advisory Committee Act, as amended (5 U.S.C. Appendix 2), notice is hereby given of the following meetings.

The meetings will be closed to the public in accordance with the provisions set forth in sections 552b(c)(4) and 552b(c)(6), Title 5 U.S.C., as amended. The grant applications and the discussions could disclose confidential trade secrets or commercial property such as patentable material, and personal information concerning individuals associated with the grant applications, the disclosure of which would constitute a clearly unwarranted invasion of personal privacy.

Name of Committee: National Center for Research Resources Special Emphasis Panel, Research Infrastructure.

Date: July 28, 2003.

Time: 8 a.m. to Adjournment.

Agenda: To review and evaluate grant applications.

Place: One Democracy Plaza, 6701 Democracy Blvd., 9th Floor Conference Room, Bethesda, MD 20892.

Contact Person: Sheryl K. Brining, PhD, Director, Office of Review, National Center for Research Resources, National Institutes of Health, One Rockledge Center, MSC 7965, 6705 Rockledge Drive, Suite 6018, Bethesda, MD 20892, 301–435–0809, *brinings@ncrr.nih.gov.*

This notice is being published less than 15 days prior to the meeting due to the timing limitations imposed by the review and funding cycle.

Name of Committee: National Center for Research Resources Special Emphasis Panel, Research Centers in Minority Institutions.

Date: July 28, 2003.

Time: 2 p.m. to Adjournment.

Agenda: To review and evaluate grant applications.

Place: Democracy One Plaza, 6701 Democracy Blvd., Room 1068, Bethesda, MD 20892, (Telephone Conference Call).

Contact Person: Eric H. Brown, PhD, Scientific Review Administrator, Office of Review, National Center for Research Resources, National Institutes of Health, 6701 Democracy Blvd., MSC 4874, Room 1068, Bethesda, MD 20892–4874, 301–435–0815, *browne@mail.nih.gov.*

This notice is being published less than 15 days prior to the meeting due to the timing limitations imposed by the review and funding cycle.

(Catalogue of Federal Domestic Assistance Program Nos. 93.306, Comparative Medicine; 93.333, Clinical Research; 93.371, Biomedical Technology; 93.389, Research Infrastructure, 93.306, 93.333, National Institutes of Health, HHS)

Dated: July 22, 2003.

LaVerne Y. Stringfield,

Director, Office of Federal Advisory Committee Policy.

[FR Doc. 03–19298 Filed 7–29–03; 8:45 am]

BILLING CODE 4140–01–M

DEPARTMENT OF HEALTH AND HUMAN SERVICES

National Institutes of Health

National Heart, Lung, and Blood Institute; Notice of Closed Meeting

Pursuant to section 10(d) of the Federal Advisory Committee Act, as amended (5 U.S.C. Appendix 2), notice is hereby given of the following meeting.

The meeting will be closed to the public in accordance with the provisions set forth in sections 552b(c)(4) and 552b(c)(6), Title 5 U.S.C., as amended. The grant applications and the discussions could disclose confidential trade secrets or commercial property such as patentable material; and personal information concerning individuals associated with the grant applications, the disclosure of which would constitute a clearly unwarranted invasion of personal privacy.

Name of Committee: National Heart, Lung, and Blood Institute Special Emphasis Panel, NHLBI Mentored Patient Oriented Research Career Development Awards.

Date: September 25–26, 2003.

Time: 7 p.m. to 4 p.m.

Agenda: To review and evaluate grant applications.

Place: Double Tree Rockville, 1750 Rockville Pike, Rockville, MD 20852.

Contact Person: Robert B Moore, PhD, Review Branch, Division of Extramural Affairs, National Heart, Lung, and Blood Institute, National Institutes of Health, 6701 Rockledge Drive, Room 7178, MSC 7924, Bethesda, MD 20892, 301/435–0725.

(Catalog of Federal Domestic Assistance Program Nos. 93.233, National Center for Sleep Disorders Research; 93.837, Heart and Vascular Diseases Research; 93.838, Lung Diseases Research; 93.839, Blood Diseases and Resources Research, National Institutes of Health, HHS)

Dated: July 21, 2003

LaVerne Y. Stringfield,

Director, Office of Federal Advisory Committee Policy.

[FR Doc. 03–19299 Filed 7–29–03; 8:45 am]

BILLING CODE 4140–01–M

DEPARTMENT OF HEALTH AND HUMAN SERVICES

National Institutes of Health

National Institute on Alcohol Abuse and Alcoholism; Notice of Closed Meeting

Pursuant to section 10(d) of the Federal Advisory Committee Act, as amended (5 U.S.C. Appendix 2), notice is hereby given of the following meeting.

The meeting will be closed to the public in accordance with the provisions set forth in sections 552b(c)(4) and 552b(c)(6), Title 5 U.S.C., as amended. The grant applications and/or contract proposals and the discussions could disclose confidential trade secrets or commercial property such as patentable material; and personal information concerning individuals associated with the grant applications and/or contract proposals,

the disclosure of which would constitute a clearly unwarranted invasion of personal privacy.

Name of Committee: National Institute on Alcohol Abuse and Alcoholism Special Emphasis Panel, AA–1 conflict Special Emphasis Panel.

Date: July 31, 2003.

Time: 1 p.m. to 2 p.m.

Agenda: To review and evaluate grant applications.

Place: National Institutes of Health, Wilco Building, 6000 Executive Boulevard, Bethesda, MD 20892, (Telephone Conference Call).

Contact Person: Sathasiva B. Kandasamy, PhD, Scientific Review Administrator, Extramural Project Review Branch, Office of Scientific Affairs, National Institute on Alcohol Abuse and Alcoholism, 6000 Executive Blvd., Suite 409, Bethesda, MD 20892–7003, (301) 443–2926, *skandasa mail.nih.gov*.

This notice is being published less than 15 days prior to the meeting due to the timing limitations imposed by the review and funding cycle.

(Catalog of Federal Domestic Assistance Program Nos. 93.271, Alcohol Research Career Development Awards for Scientists and Clinicians; 93.272, Alcohol National Research Service Awards for Research Training; 93.273, Alcohol Research Programs; 93.891, Alcohol Research Center Grants, National Institutes of Health, HHS)

Dated: July 22, 2003.

LaVerne Y. Stringfield,

Director, Office of Federal Advisory Committee Policy.

[FR Doc. 03–19300 Filed 7–29–03; 8:45 am]

BILLING CODE 4140–01–M

DEPARTMENT OF HEALTH AND HUMAN SERVICES

National Institutes of Health

National Institute of Mental Health; Notice of Closed Meetings

Pursuant to section 10(d) of the Federal Advisory Committee Act, as amended (5 U.S.C. Appendix 2), notice is hereby given of the following meetings.

The meetings will be closed to the public in accordance with the provisions set forth in sections 552b(c)(4) and 552b(c)(6), Title 5 U.S.C., as amended. The contract proposals and the discussions could disclose confidential trade secrets or commercial property such as patentable material, and personal information concerning individuals associated with the contract proposals, the disclosure of which would constitute a clearly unwarranted invasion of personal privacy.

Name of Committee: National Institute of Mental Health Special Emphasis Panel, SBIR.

Date: July 29, 2003.

Time: 2 p.m to 3:30 p.m.

Agenda: To review and evaluate contract proposals.

Place: National Institutes of Health, Neuroscience Center, 6001 Executive Boulevard, Rockville, MD 20852, (Telephone Conference Call).

Contact Person: Mark Czarnolewski, PhD, Scientific Review Administrator, Division of Extramural Activities, National Institute of Mental Health, NIH, Neuroscience Center, 6001 Executive Blvd., Room 6153, MSC 9608, Bethesda, MD 20892–9608, 301–402–8152, *mczarnol@mail.nih.gov*.

This notice is being published less than 15 days prior to the meeting due to the timing limitations imposed by the review and funding cycle.

Name of Committee: National Institute of Mental Health Special Emphasis Panel, SBIR Phase II: Topic 27.

Date: July 31, 2003.

Time: 2 p.m to 4 p.m.

Agenda: To review and evaluate contract proposals.

Place: National Institutes of Health, Neuroscience Center, 6001 Executive Boulevard, Rockville, MD 20852, (Telephone Conference Call).

Contact Person: Mark Czarnolewski, PhD, Scientific Review Administrator, Division of Extramural Activities, National Institute of Mental Health, NIH, Neuroscience Center, 6001 Executive Blvd., Room 6153, MSC 9608, Bethesda, MD 20892–9608, 301–402–8152, *mczarnol@mail.nih.gov*.

This notice is being published less than 15 days prior to the meeting due to the timing limitations imposed by the review and funding cycle.

(Catalogue of Federal Domestic Assistance Program Nos. 93.242, Mental Health Research Grants; 93.281, Scientist Development Award, Scientist Development Award for Clinicians, and Research Scientist Award; 93.282, Mental Health National Research Service Awards for Research Training, National Institutes of Health, HHS)

Dated: July 22, 2003.

LaVerne Y. Stringfield,

Director, Office of Federal Advisory Committee Policy.

[FR Doc. 03–19301 Filed 7–29–03; 8:45 am]

BILLING CODE 4140–01–M

DEPARTMENT OF HEALTH AND HUMAN SERVICES

National Institutes of Health

National Institute of Mental Health; Notice of Closed Meeting

Pursuant to section 10(d) of the Federal Advisory Committee Act, as amended (5 U.S.C. Appendix 2), notice is hereby given of the following meeting.

The meeting will be closed to the public in accordance with the provisions set forth in sections 552b(c)(4) and 552b(c)(6), Title 5 U.S.C., as amended. The grant applications and the discussions could disclose confidential trade secrets or commercial property such as patentable material, and personal information concerning indivudals associated with the grant application, the disclosure of which would constitute a clearly unwarranted invasion of personal privacy.

Name of Committee: National Institute of Mental Health Special Emphasis Panel, Treatment for Anxiety Disorders.

Date: July 30, 2003.

Time: 1 p.m. to 2 p.m.

Agenda: To review and evaluate grant applications.

Place: National Institutes of Health, Neuroscience Center, 6001 Executive Boulevard, Rockville, MD 20852, (Telephone Conference Call).

Contact Person: Sara K Goldsmith, PhD, Scientific Review Administrator, Division of Extramural Activities, National Institute of Mental Health, NIH, Neuroscience Center, 6001 Executive Blvd., Room 6154, MSC 9608, Bethesda, MD 20892-9608.

This notice is being published less than 15 days prior to the meeting due to the timing limitations imposed by the review and funding cycle.

(Catalogue of Federal Domestic Assistance Program Nos. 93.242, Mental Health Research Grants; 93.281, Scientist Development Award, Scientist Development Award, Scientist Development Award for Clinicians, and Research Scientist Award; 93.282, Mental Health, National Research Service Awards for Research Training, National Institutes of Health, HHS)

Dated: July 22, 2003.

LaVerne Y. Stringfield,

Director, Office of Federal Advisory Committee Policy.

[FR Doc. 03–19302 Filed 7–29–03; 8:45 am]

BILLING CODE 4140–01–M

DEPARTMENT OF HEALTH AND HUMAN SERVICES

National Institutes of Health

Center for Scientific Review; Notice of Closed Meetings

Pursuant to section 10(d) of the Federal Advisory Committee Act, as amended (5 U.S.C. Appendix 2), notice is hereby given of the following meetings.

The meetings will be closed to the public in accordance with the provisions set forth in sections 552b(c)(4) and 552b(c)(6), Title 5 U.S.C., as amended. The grant applications and the discussions could disclose confidential trade secrets or commercial property such as patentable material, and personal information concerning individuals associated with the grant applications, the disclosure of which

would constitute a clearly unwarranted invasion of personal privacy.

Name of Committee: Center for Scientific Review Special Emphasis Panel, ZRG1 VACC 03: R21 applications: AIDS Vaccines.
Date: July 29, 2003.
Time: 8:30 a.m. to 4 p.m.
Agenda: To review and evaluate grant applications.
Place: Holiday Inn Select Bethesda, 8120 Wisconsin Ave., Bethesda, MD 20814.
Contact Person: Mary Clare Walker, PhD, Scientific Review Administrator, Center for Scientific Review, National Institutes of Health, 6701 Rockledge Drive, Room 5104, MSC 7852, Bethesda, MD 20892, (301) 435–1165.
This notice is being published less than 15 days prior to the meeting due to the timing limitations imposed by the review and funding cycle.

Name of Committee: Center for Scientific Review Special Emphasis Panel, Salmonella Physiology.
Date: July 29, 2003.
Time: 3 p.m. to 4 p.m.
Agenda: To review and evaluate grant applications.
Place: National Institutes of Health, 6701 Rockledge Drive, Bethesda, MD 20892, (Telephone Conference Call).
Contact Person: Melody Mills, PhD, Scientific Review Administrator, Center for Scientific Review, National Institutes of Health, 6701 Rockledge Drive, MSC 7808, Room 3206, Bethesda, MD 20892, 301–435–0903.
This notice is being published less than 15 days prior to the meeting due to the timing limitations imposed by the review and funding cycle.

Name of Committee: Center for Scientific Review Emphasis Panel, ZRG1 VACC 05—AIDS Vaccines.
Date: July 29, 2003.
Time: 4 a.m. to 5 p.m.
Agenda: To review and evaluate grant applications.
Place: Holiday Inn Select Bethesda, 8120 Wisconsin Ave., Bethesda, MD 20814.
Contact Person: Mary Clare Walker, PhD, Scientific Review Administrator, Center for Scientific Review, National Institutes of Health, 6701 Rockledge Drive, Room 5104, MSC 7852, Bethesda, MD 20892, (301) 435–1165.
This notice is being published less than 15 days prior to the meeting due to the timing limitations imposed by the review and funding cycle.

Name of Committee: Center for Scientific Review Special Emphasis Panel, ZRG1 VACC 01: Vaccines of Infectious Diseases.
Date: July 30–31, 2003.
Time: 8:30 a.m. to 3 p.m.
Agenda: To review and evaluate grant applications.
Place: Holiday Inn Select Bethesda, 8120 Wisconsin Ave., Bethesda, MD 20814.
Contact Person: Mary Clare Walker, PhD, Scientific Review Administrator, Center for Scientific Review, National Institutes of Health, 6701 Rockledge Drive, Room 5104, MSC 7852, Bethesda, MD 20892 (301) 435–1165.
This notice is being published less than 15 days prior to the meeting due to the timing limitations imposed by the review and funding cycle.

Name of Committee: Center for Scientific Review Special Emphasis Panel, ZRG1 VACC 04; Viral Vaccines.
Date: July 31, 2003.
Time: 3 p.m. to 5 p.m.
Agenda: To review and evaluate grant applications.
Place: 8120 Wisconsin Ave., Bethesda, MD 20814.
Contact Person: Mary Clare Walker, PhD, Scientific Review Administrator, Center for Scientific Review, National Institutes of Health, 6701 Rockledge Drive, Room 5104, MSC 7852, Bethesda, MD 20892 (301) 435–1165.
This notice is being published less than 15 days prior to the meeting due to the timing limitations imposed by the review and funding cycle.

Name of Committee: Center for Scientific Review Special Emphasis Panel, ZRG1 VACC 10: Small Business—Infectious Disease Vaccines.
Date: August 1, 2003.
Time: 8:30 a.m. to 5 p.m
Agenda: To review and evaluate grant applications.
Place: Holiday Inn Select Bethesda, 8120 Wisconsin Ave., Bethesda, MD 20814.
Contact Person: Mary Clare Walker, PhD, Scientific Review Administrator, Center for Scientific Review, National Institutes of Health, 6701 Rockledge Drive, Room 5104, MSC 7852, Bethesda, MD 20892 (301) 435–1165.
This notice is being published less than 15 days prior to the meeting due to the timing limitations imposed by the review and funding cycle.

Name of Committee: Center for Scientific Review Special Emphasis Panel, Immunology.
Date: August 19, 2003.
Time: 1 p.m to 2:30 p.m.
Agenda: To review and evaluate grant applications.
Place: National Institutes of Health, 6701 Rockledge Drive, Bethesda, MD 20892 (Telephone Conference Call).
Contact Person: Calbert A. Laing, PhD, Scientific Review Administrator, Center for Scientific Review, National Institutes of Health, 6701 Rockledge Drive, Room 4210, MSC 7812, Bethesda, MD 20892 (301) 435–1221, *laingc@csr.nih.gov.*

Name of Committee: Center for Scientific Review Special Emphasis Panel, Toll Receptors in Innate Immunity.
Date: August 19, 2003.
Time: 1:30 p.m. to 2:30 p.m.
Agenda: To review and evaluate grant applications.
Place: National Institutes of Health, 6701 Rockledge Drive, Bethesda, MD 20892 (Telephone Conference Call).
Contact Person: Tina McIntyre, PhD, Scientific Review Administrator, Center for Scientific Review, National Institutes of Health, 6701 Rockledge Drive, Room 4202, MSC 7812, Bethesda, MD 20892 (301) 594–6375, *mcintyrt@csr.nih.gov.*

(Catalogue of Federal Domestic Assistance Program Nos. 93.306, Comparative Medicine; 93.333, Clinical Research, 93.306, 93.333, 93.337, 93.393–93.396, 93.837–93.844, 93.846–93.878, 93.893, National Institutes of Health, HHS)

Dated: July 22, 2003.

LaVerne Y. Stringfield,

Director, Office of Federal Advisory Committee Policy.

[FR Doc. 03–19297 Filed 7–29–03; 8:45 am]

BILLING CODE 4140–01–M

DEPARTMENT OF HEALTH AND HUMAN SERVICES

National Institutes of Health

Prospective Grant of Exclusive License: Instrumentation Systems and Associated Reagents for High Speed Parallel Molecular Nucleic Acid Sequencing for Performing Single Molecule Nucleic Acid Analysis

AGENCY: National Institutes of Health, Public Health Service, DHHS.

ACTION: Notice.

SUMMARY: This is notice, in accordance with 35 U.S.C. 209(c)(1) and 37 CFR 404.7(a)(1)(i), that the National Institutes of Health (NIH), Department of Health and Human Services, is contemplating the grant of an exclusive license to practice the invention embodied in Patent Applications U.S. 60/151,580, filed August 29, 1999, PCT/US00/23736, filed August 29, 2000, and U.S. 10/070,053, filed June 10, 2002, entitled ''High Speed Parallel Molecular Nucleic Acid Sequencing'', to LI-COR, Inc., having a place of business in Lincoln, NE. The patent rights in this invention have been assigned to the United States of America.

DATES: Only written comments and/or application for a license that are received by the NIH Office of Technology Transfer on or before September 29, 2003, will be considered.

ADDRESSES: Requests for a copy of the patent application, inquiries, comments and other materials relating to the contemplated license should be directed to: Cristina Thalhammer-Reyero, Ph.D., M.B.A., Office of Technology Transfer, National Institutes of Health, 6011 Executive Boulevard, Suite 325, Rockville, MD 20852–3804; E-mail: *ThalhamC@mail.nih.gov*; Telephone: 301–435–4507; Facsimile: 301–402–0220.

SUPPLEMENTARY INFORMATION: The prospective exclusive license will be royalty bearing and will comply with the terms and conditions of 35 U.S.C. 209 and 37 CFR 404.7. The prospective

exclusive license may be granted unless, within 60 days from the date of this published notice, NIH receives written evidence and argument that establishes that the grant of the license would not be consistent with the requirements of 35 U.S.C. § 209 and 37 CFR § 404.7.

The invention relates to a method and apparatus for DNA sequencing, also known as Two Dye Sequencing (TDS). This invention is based on Fluorescence Resonance Energy Transfer (FRET), a technology increasingly in use for several molecular analysis purposes. In particular, the method consists of: (1) Attachment of engineered DNA polymerases labeled with a donor fluorophore to the surface (chamber) of a microscope field of view, (2) addition to the chamber of DNA with an annealed oligonucleotide primer, which is bound by the polymerase, (3) further addition of four nucleotide triphosphates, each labeled on the base with a different fluorescent acceptor dye, (4) excitation of the donor fluorophore with light of a wavelength specific for the donor but not for any of the acceptors, resulting in the transfer of the energy associated with the excited state of the donor to the acceptor fluorophore for a given nucleotide, which is then radiated via FRET, (5) identification of the nucleotides most recently added to the chamber by recording the fluorescent spectrum of the individual dye molecules at specific locations in the microscope field, and (6) converting the sequential spectrum into a DNA sequence for each DNA molecule in the microscope field of view.

The field of use may be limited to instrumentation systems and associated reagents for performing single molecule nucleic acid analysis.

Properly filed competing applications for a license filed in response to this notice will be treated as objections to the contemplated license. Comments and objections submitted in response to this notice will not be made available for public inspection, and, to the extent permitted by law, will not be released under the Freedom of Information Act, 5 U.S.C. 552.

Dated: July 17, 2003.

Steven M. Ferguson,

Acting Director, Division of Technology Development and Transfer, Office of Technology Transfer.

[FR Doc. 03–19296 Filed 7–29–03; 8:45 am]

BILLING CODE 4140–01–P

DEPARTMENT OF HOMELAND SECURITY

Bureau of Citizenship and Immigration Services

[BCIS No. 2207–02]

Redesign of Form I–327, Permit to Reenter the United States, and Form I–571, Refugee Travel Document

AGENCY: Bureau of Citizenship and Immigration Services, U.S. Department of Homeland Security.

ACTION: Notice.

SUMMARY: This notice announces that during fiscal year 2003 the Bureau of Citizenship and Immigration Services (BCIS) will begin issuing a new single passport-style travel document that, depending on the circumstances, will either contain the Form I–327, Permit to Reenter the United States, or Form I–571, Refugee Travel Document. Development of the redesigned travel document is intended to reduce production time, improve customer service and strengthen the booklet's security features. Enhanced technologies, similar to those used in the production of the United States Passport, will be employed in printing the BCIS travel document to prevent counterfeiting, tampering and other fraudulent schemes. The new document will be produced at the BCIS Nebraska Service Center in Lincoln, NE, where the two separate travel booklets are currently prepared. On March 1, 2003, the Immigration and Naturalization Service (INS) transferred from the Department of Justice to the Department of Homeland Security (DHS), pursuant to the Homeland Security Act of 2002 (Pub. L. 107–296). The INS adjudications functions transferred to the Bureau of Citizenship and Immigration Services of DHS.

DATES: This notice is effective July 30, 2003.

FOR FURTHER INFORMATION CONTACT: Sandra Schatz Landis, Chief, Immigration Card Production Services (ICPS) Branch, Bureau of Citizenship and Immigration Services, 800 K Street, Room 1000, Washington, DC 20536, telephone (202) 305–8010.

SUPPLEMENTARY INFORMATION:

Background

Who Uses the Forms I–327 and I–571?

Form I–327, Permit to Reenter the United States. The Form I–327 allows a lawful permanent or conditional permanent resident of the United States to apply for admission into the United States upon returning from abroad without having to obtain a returning resident visa.

Form I–571, Refugee Travel Document. A refugee travel document is issued pursuant to Article 28 of the United Nations Convention of July 29, 1951, for the purpose of travel. It may be issued to a person who is in the United States as a refugee pursuant to section 207 of the Immigration and Nationality Act (Act), as an asylee pursuant to section 208 of the Act, or as a permanent resident who received such status as a direct result of refugee or asylee status. A lawfully obtained, currently valid Form I–571, shall be accepted in lieu of any travel document which otherwise would be required from such person under the Act.

How Can a Person Apply for Forms I–327 or I–571?

An application for a Form I–327 or Form I–571 must be filed on Form I–131, Application for Travel Document, with the fee as required in 8 CFR 103.7(b)(1) and with the initial evidence required on the application form. The applicant must state the length of intended absence or absences, and the reasons for travel. Except as provided in 8 CFR 223.2(b)(2)(ii), the application may be approved if filed by an eligible person who is within the United States at the time of submission.

Will the fee For Filing Form I–131 Change?

Until the BCIS conducts a new fee study, the current fee of $110 will not change as a result of issuing the single passport-style travel document.

Where Should the Form I–131 Be Filed?

Applicants must file the application according to the instructions on Form I–131 at the Nebraska Service Center.

May an Applicant Request Expedited Processing of the Travel Document in an Emergency?

To deal fairly and equitably with applicants for travel documents, it is BCIS policy that cases be processed in chronological order by date of receipt.

However, an exception may be permitted in emergency situations if the request is approved by the Nebraska Service Center director, deputy director or an official acting in such capacity.

How Does the BCIS Plan To Implement the Production of the New Travel Document?

The document will be produced at the Nebraska Service Center where the separate travel booklets are now prepared.

What Will the New Travel Document Look Like?

Other than a new light green cover, the redesigned travel document will look similar to a United States Passport. The title, ''Travel Document Issued by the U.S. Department of Homeland Security, Bureau of Citizenship and Immigration Services,'' will appear on the front cover. The type of travel document issued will appear on the inside page of the front cover, showing either Form I–327, Permit to Reenter the United States, or Form I–571, Refugee Travel Document. Biographical information and a photograph related to the approved applicant that appears on the current Forms I–327 or I–571 will also be shown in the new travel document. The remaining pages will look similar to the current Forms I–327 and I–571.

How Will the Travel Document Be Issued?

Once the appropriate travel document is produced, the Nebraska Service Center will mail it to the approved applicant according to his or her instructions.

Except as provided in 8 CFR 223.3(b)(2), while an applicant must be physically present in the United States at the time of filing, the Nebraska Service Center may mail the travel document in care of a United States embassy or consulate or a BCIS overseas office, if the applicant requests such service at the time of filing.

What Is the Validity of the Travel Document?

Permit To Reenter the United States. Except as provided in 8 CFR 223.2(c)(2), Form I–327 issued to a Permanent Resident shall be valid for 2 years from the date of issuance. Form I–327 issued to a *conditional permanent resident* shall be valid for 2 years from the date of issuance, or until the date the conditional permanent resident must apply for removal of the conditions on his or her status, whichever date is earlier.

Refugee travel document. Form I–571 shall be valid for one year, or until the date the refugee or asylee status expires, whichever date is earlier.

Will Those Who Possess Unexpired Forms I–327 or I–571 Be Required To Apply for a New Travel Document When BCIS Starts Producing the Newly Designed Document?

No. Authorized users may continue to travel on their previously issued Form I–327 or Form I–571 until its expiration date. If an applicant applies thereafter for a travel document, he or she will be issued the newly designed document.

Can a Travel Document Be Extended?

No. A permit to reenter the United States or refugee travel document cannot be extended.

Will the New Travel Document Affect the Process for Applying for Advance Parole?

No. Applicants will continue to use the Form I–131 to apply for advance parole. Upon BCIS approval of the application, a Form I–512, Authorization of Parole of an Alien Into the United States, shall be issued to the applicant.

Eduardo Aguirre, Jr.,

Acting Director, Bureau of Citizenship and Immigration Services.

[FR Doc. 03–19338 Filed 7–29–03; 8:45 am]

BILLING CODE 4410–10–P

DEPARTMENT OF HOMELAND SECURITY

Coast Guard

[COTP Houston–Galveston–03–003]

Notice and Request for Comments; Letter of Recommendation, LHG or LNG, Freeport, TX

AGENCY: Coast Guard, DHS.

ACTION: Notice and request for public comment.

SUMMARY: The U.S. Coast Guard Captain of the Port, Houston-Galveston (COTP), is preparing a letter of recommendation as to the suitability of the Brazos River waterway for liquefied hazardous gas (LHG) or liquefied natural gas (LNG) marine traffic. The COTP is looking for comments and related material pertaining specifically to the Maritime Operation, Waterways Management, and Port Security aspects of the proposed LHG and LNG Facility.

DATES: Comments and related material pertaining specifically to the Maritime Operation, Waterways Management, and Port Security aspects of the proposed LNG Facility must reach the Coast Guard on or before August 29, 2003.

ADDRESSES: You may mail comments and related material to: Commanding Officer, U.S. Coast Guard Marine Safety Unit, PO Box 0149, Galveston, TX 77553–0149, ATTN: Marine Transportation Branch.

You may send comments and related material by fax to: U.S. Coast Guard Marine Safety Unit (MSU) Galveston, Attention: Marine Transportation Branch, at (409) 766–5468.

U.S. Coast Guard Marine Safety Unit (MSU) Galveston maintains a file for this notice. Comments and material received from the public during the comment period will become part of this file and will be available for inspection or copying at U.S. Coast Guard MSU Galveston, Marine Transportation Branch, between the hours of 8 a.m. to 4:30 p.m., Monday through Friday, excluding federal holidays.

FOR FURTHER INFORMATION CONTACT: LTJG Ben Allen at U.S. Coast Guard MSU Galveston, at (409) 766–5437.

SUPPLEMENTARY INFORMATION:

Request for Comments

We encourage you to participate by submitting comments and related material pertaining specifically to the Maritime Operation, Waterways Management, and Port Security aspects of the proposed liquefied natural gas (LNG) Facility. If you do so, please include your name and address, identify the docket number [COTP Houston-Galveston–03–003], indicate the specific section of this document to which each comment applies, and give the reason for each comment. Please submit all comments and related material in an unbound format, no larger than 8½ by 11 inches, suitable for copying and electronic filing. For a returned receipt, please enclose a stamped, self-addressed postcard or envelope. We will consider all comments and material received during the comment period. The recommendation made by this office may be affected by comments received.

Public Meeting

We do not now plan to hold public meetings or hearings. But you may submit a request for meetings or hearing by writing to Commanding Officer, U.S. Coast Guard MSU Galveston at the address under **ADDRESSES** explaining why they would be beneficial. If we determine that public hearings or meetings would benefit the recommendation process, we will hold them at a time and place announced by a later notice in the **Federal Register**.

Background and Purpose

In accordance with the requirements in 33 CFR 127.009, the U.S. Coast Guard Captain of the Port, Houston-Galveston (COTP), is preparing a letter of recommendation as to the suitability of the Brazos River waterway for liquefied hazardous gas (LHG) or liquefied natural gas (LNG) marine traffic. The letter of recommendation is in response to a Letter of Intent to operate a LNG facility in Freeport, Texas. This facility would

consist of an LNG import terminal and storage facilities and 9.38 miles of 36-inch-diameter pipeline in Brazoria County.

Freeport LNG Development LP proposes to build a new LNG import, storage, and vaporization terminal on Quintana Island, southeast of Freeport, Texas; and a natural gas pipeline to transfer up to 1.5 billion cubic feet per day of imported natural gas to the Texas market. Construction of the proposed LNG facility would require about 45.7 acres of land for the marine terminal. Freeport LNG Development LP seeks authority to construct and operate the following new facilities at its proposed site:

- LNG ship docking and unloading facilities with a protected single berth equipped with mooring and breasting dolphins, three liquid unloading arms, and one vapor return arm;
- Two 26-inch-diameter (32-inch outside diameter) LNG transfer lines and one 16-inch-diameter vapor return line;
- Service lines (instrument air, nitrogen, potable water, and firewater);
- Fire response system, flare, construction dock, utilities, buildings, and service facilities;
- 9.38 miles of 36-inch-diameter natural gas pipeline extending from the LNG import terminal to a proposed Stratton Ridge Meter Station, and;
- Other structures and facilities not related specifically to the Marine Transfer aspect of this Facility.

Freeport LNG Development LP is requesting approval such that the terminal and pipeline are completed and placed into service in time to meet natural gas demand during the 2006–2007 winter heating season. Construction of the facilities would take about 3 years.

In preparation for issuance of the letter of recommendation, the COTP will consider all information submitted by the owner or operator under the requirements of 33 CFR 127.007, as well as comments received from the public.

Additional Information

Additional information can be found in the Federal Energy Regulatory Commission Document entitled ''Notice of Intent To Prepare an Environmental Impact Statement for the Proposed Freeport LNG Project and Request for Comments on Environmental Issues and Notice of Public Scoping Meeting and Site Visit'', Docket No. CP03–75–000 dated May 13, 2003, which is available for download at *http://www.ferc.gov*.

Dated: July 9, 2003.

Kevin S. Cook,

Captain, U.S. Coast Guard, Captain of the Port, Houston-Galveston, Eighth Coast Guard District.

[FR Doc. 03–19412 Filed 7–29–03; 8:45 am]

BILLING CODE 4910–15–P

DEPARTMENT OF THE INTERIOR

Fish and Wildlife Service

Receipt of Applications for Permit

AGENCY: Fish and Wildlife Service, Interior.

ACTION: Notice of receipt of applications for permit.

SUMMARY: The public is invited to comment on the following applications to conduct certain activities with endangered species.

DATES: Written data, comments or requests must be received by August 29, 2003.

ADDRESSES: Documents and other information submitted with these applications are available for review, subject to the requirements of the Privacy Act and Freedom of Information Act, by any party who submits a written request for a copy of such documents within 30 days of the date of publication of this notice to: U.S. Fish and Wildlife Service, Division of Management Authority, 4401 North Fairfax Drive, Room 700, Arlington, Virginia 22203; fax 703/358–2281.

FOR FURTHER INFORMATION CONTACT: Division of Management Authority, telephone 703/358–2104.

SUPPLEMENTARY INFORMATION:

Endangered Species

The public is invited to comment on the following applications for a permit to conduct certain activities with endangered species. This notice is provided pursuant to Section 10(c) of the Endangered Species Act of 1973, as amended (16 U.S.C. 1531, *et seq.*). Written data, comments, or requests for copies of these complete applications should be submitted to the Director (address above).

PRT–074558

Applicant: Larry B. Higgins, Gaylord, MI

The applicant requests a permit to import the sport-hunted trophy of one male bontebok (*Damaliscus pygargus dorcas*) culled from a captive herd maintained under the management program of the Republic of South Africa, for the purpose of enhancement of the survival of the species.

PRT–074551

Applicant: Jay W. Furney, Pueblo, CO

The applicant requests a permit to import the sport-hunted trophy of one male bontebok (*Damaliscus pygargus dorcas*) culled from a captive herd maintained under the management program of the Republic of South Africa, for the purpose of enhancement of the survival of the species.

PRT–074557

Applicant: Scott F. Garrett, Houston, TX

The applicant requests a permit to import the sport-hunted trophy of one male bontebok (*Damaliscus pygargus dorcas*) culled from a captive herd maintained under the management program of the Republic of South Africa, for the purpose of enhancement of the survival of the species.

PRT–071994

Applicant: Corinne L. Richards, Ann Arbor, MI

The applicant requests a permit to import biological samples of Panamanian golden frogs (*Atelopus zeteki* and *Atelopus varius*) for the purpose of enhancement of the species through scientific research. This notification covers activities to be conducted by the applicant over a five year period.

PRT–073403, 073404 and 005821

Applicant: Ferdinand & Anton Fercos Hantig, Las Vegas, Nevada

The applicant requests permits to export leopard *(Panthera pardus)* to worldwide locations for the purpose of enhancement of the species through conservation education. The permit numbers and animals are: 073403—Sherni, 073404—Picasso, 005821—Ferdinand. This notification covers activities to be conducted by the applicant over a three-year period and the import of any potential progeny born while overseas.

The U.S. Fish and Wildlife Service has information collection approval from OMB through March 31, 2004, OMB Control Number 1018–0093. Federal Agencies may not conduct or sponsor and a person is not required to respond to a collection of information unless it displays a current valid OMB control number.

Dated: July 18, 2003.

Monica Farris,

Senior Permit Biologist, Branch of Permits, Division of Management Authority.

[FR Doc. 03–19415 Filed 7–29–03; 8:45 am]

BILLING CODE 4310–55–P

DEPARTMENT OF THE INTERIOR

Fish and Wildlife Service

Draft Recovery Plan for the Sierra Nevada Bighorn Sheep

AGENCY: Fish and Wildlife Service, Interior.

ACTION: Notice of document availability for review and comment.

SUMMARY: We, the U.S. Fish and Wildlife Service, announce the availability of the Draft Recovery Plan for the Sierra Nevada Bighorn Sheep (*Ovis canadensis californiana;* bighorn sheep) for public review. The species occurs primarily on lands managed by the U.S. Forest Service, Inyo National Forest, and the National Park Service, Yosemite National Park in the Sierra Nevada in western Inyo and Mono Counties, California. This draft recovery plan describes the status, current management, recovery objectives and criteria, and specific actions needed to reclassify the bighorn sheep from endangered to threatened, and to ultimately delist it. We solicit review and comment from local, State, and Federal agencies, and the public on this draft recovery plan.

DATES: Comments on the draft recovery plan must be received on or before September 29, 2003 to receive our consideration.

ADDRESSES: Copies of the draft recovery plan are available for inspection, by appointment, during normal business hours at the following location: U.S. Fish and Wildlife Service, Ventura Fish and Wildlife Office, 2493 Portola Road, Suite B, Ventura, California 93003 (telephone 805–644–1766). Requests for copies of the draft recovery plan and written comments and materials regarding the plan should be addressed to the Field Supervisor at the above address. An electronic copy of this draft recovery plan is also available at *http://www.r1.fws.gov/ecoservices/endangered/recovery/default.htm.*

FOR FURTHER INFORMATION CONTACT: Carl Benz, Fish and Wildlife Biologist, at the above address.

SUPPLEMENTARY INFORMATION:

Background

Recovery of endangered or threatened animals and plants to the point where they are again secure, self-sustaining members of their ecosystems is a primary goal of our endangered species program. To help guide the recovery effort, we are working to prepare recovery plans for most listed species native to the United States. Recovery plans describe actions considered necessary for the conservation of the species, establish criteria for downlisting or delisting listed species, and estimate time and cost for implementing the recovery measures needed.

The Endangered Species Act (16 U.S.C. 1531 *et seq.*) (Act), requires the development of recovery plans for listed species unless such a plan would not promote the conservation of a particular species. Section 4(f) of the Act requires that public notice and an opportunity for public review and comment be provided during recovery plan development. We will consider all information presented during the public comment period prior to approval of each new or revised recovery plan. Substantive technical comments will result in changes to the plan. Substantive comments regarding recovery plan implementation may not necessarily result in changes to the recovery plan, but will be forwarded to appropriate Federal or other entities so that they can take these comments into account during the course of implementing recovery actions. Individual responses to comments will not be provided.

This draft recovery plan was developed by the Sierra Nevada Bighorn Sheep Recovery Team. We coordinated with the California Department of Fish and Game, and a team of stakeholders, which included ranchers, landowners and managers, agency representatives, and non-government organizations.

The population of bighorn sheep in the Sierra Nevada of California was listed as an endangered species on January 3, 2000, (65 FR 20) following emergency listing on April 20, 1999, (64 FR 19300). At the time of listing, the bighorn sheep population was very small, with only about 125 adults known to exist among 5 geographic areas, with little probability of interchange among those areas. The bighorn sheep is threatened primarily by transmission of disease from domestic sheep and goats, and predation by mountain lions. Key elements for immediate action are: (1) Predator management; (2) augmentation of small herds with sheep from larger ones; and (3) elimination of the threat of a pneumonia epizootic resulting from contact with domestic sheep or goats. Actions needed to recover the bighorn sheep include: (1) Protection of bighorn sheep habitat; (2) increase population growth by enhancing survivorship and reproductive output of bighorn sheep; (3) increase the numbers of herds, and thereby the number of bighorn sheep; (4) develop and implement a genetic management plan to maintain genetic diversity; (5) monitor status and trends of bighorn sheep herds and their habitat; (6) research; and (7) providing information to the public.

Public Comments Solicited

We solicit written comments on the draft recovery plan described. All comments received by the date specified above will be considered in developing a final recovery plan.

Authority

The authority for this action is section 4(f) of the Endangered Species Act, 16 U.S.C. 1533(f).

Dated: June 4, 2003.

Steve Thompson,

Manager, California/Nevada Operations Office, Region 1 , U.S. Fish and Wildlife Service.

[FR Doc. 03–19315 Filed 7–29–03; 8:45 am]

BILLING CODE 4310–55–P

DEPARTMENT OF THE INTERIOR

Fish and Wildlife Service

Draft Environmental Assessment for the Management Plan for Endangered Fishes in the Yampa River Basin

AGENCY: Fish and Wildlife Service, Interior.

ACTION: Notice of document availability.

SUMMARY: The public is invited to comment on a draft Environmental Assessment for the Management Plan for Endangered Fishes in the Yampa River Basin. The Fish and Wildlife Service (Service) has prepared a draft Environmental Assessment under regulations implementing the National Environmental Policy Act of 1969 (NEPA). Council on Environmental Quality adopted regulations in 40 CFR 1501.3(b) state that an agency ''may prepare an environmental assessment on any action at any time in order to assist agency planning and decision making.'' The proposed action of the Service is to enter into a cooperative agreement with the States of Colorado and Wyoming to implement provisions of the Management Plan for Endangered Fishes in the Yampa River Basin. Future actions that may be undertaken pursuant to this management plan may be subject to additional NEPA documentation requirements on a case-by-case basis.

DATES: Written comments on this draft Environmental Assessment and Management Plan must be received by August 31, 2003. In lieu of or in addition to written comments, comments may be submitted at any of

the three public meetings to be held in August 2003. Public meetings are scheduled Monday, August 11, 2003, in Baggs, Wyoming; Tuesday, August 12, 2003, in Steamboat Springs, Colorado; and Wednesday, August 13, 2003, in Craig, Colorado. All meetings are scheduled from 7 p.m. to 9 p.m.

ADDRESSES: Public meetings will be held at the Little Snake River Valley Library, 105 2nd Street, Baggs, Wyoming; Centennial Hall, 124 10th Street, Steamboat Springs, Colorado; and Shadow Mountain Clubhouse, 1055 County Road 7, Craig, Colorado.

Copies of the draft Environmental Assessment and Management Plan are available online at *http://www.r6.fws.gov/crrip/yampa.htm* or at the following Yampa Valley locations—Bud Werner Memorial Library, 1289 Lincoln Avenue, Steamboat Springs, Colorado; Hayden Town Hall, 178 W. Jefferson Avenue, Hayden, Colorado; Moffat County Public Library, 570 Green Street, Craig, Colorado; Little Snake River Valley Library, 105 2nd Street, Baggs, Wyoming.

Copies of the draft Environmental Assessment and Management Plan, either printed and bound or on CD-ROM, also are available by request. Requests for copies and written comments may be sent to Dr. Robert Muth, Director, by postal mail at Upper Colorado River Endangered Fish Recovery Program, U.S. Fish and Wildlife Service, P.O. Box 25486, DFC, Denver, Colorado, 80225–0486; by fax at (303) 969–7327; or by e-mail at *ColoradoRiverRecovery@fws.gov.*

FOR FURTHER INFORMATION CONTACT: Dr. Robert Muth, Director, at telephone (303) 969–7322 (extension 268); Mr. Gerry Roehm, Instream Flow Coordinator (extension 272); Ms. Debra Felker, Information and Education Coordinator (extension 227); or at the postal and e-mail addresses above.

SUPPLEMENTARY INFORMATION: The Upper Colorado River Endangered Fish Recovery Program (Program) was established in 1988 by a cooperative agreement among the governors of Wyoming, Colorado, and Utah, Secretary of the Department of the Interior, and Administrator of the Western Area Power Administration for the purpose of recovering four endangered fish species endemic to the Colorado River Basin—the humpback chub (*Gila cypha*), bonytail (*Gila elegans*), Colorado pikeminnow (*Ptychocheilus lucius*), and razorback sucker (*Xyrauchen texanus*). In August 2002, the Service completed recovery goals for these species, which identify five threat factors that led to their decline. These factors, which include—(1) Destruction, modification, or curtailment of the species' habitat or range; (2) overutilization; (3) disease and predation; (4) inadequacy of existing regulatory mechanisms; and (5) other natural or manmade factors, must be removed or abated to ensure the species' recovery. The recovery goals specify that certain recovery actions be taken to achieve the demographic criteria necessary for the species' downlisting and eventual delisting. Flow modification, obstructions to fish passage, and the presence of competitive and predatory nonnative fishes are considered to present the most significant threats to recovery. Consistent with the recovery goals, Program participants developed a Management Plan for Endangered Fishes in the Yampa River Basin to facilitate recovery of listed fishes as water continues to be depleted from the river to serve the needs of the people of the Yampa Basin now and into the foreseeable future. This management plan identifies a package of recovery actions to be implemented in the Yampa River Basin, including instream flow augmentation, fish passage, and management of nonnative fish populations. The Service proposes to enter into a cooperative agreement to implement the plan. This Federal action requires that the Service fulfill the requirements of the NEPA, for which an Environmental Assessment has been prepared.

Dated: March 27, 2003.

Elliott N. Sutta,

Acting Regional Director, Denver, Colorado.

[FR Doc. 03–17696 Filed 7–29–03; 8:45 am]

BILLING CODE 4310–55–P

DEPARTMENT OF THE INTERIOR

Fish and Wildlife Service

Issuance of Permits

AGENCY: Fish and Wildlife Service, Interior.

ACTION: Notice of issuance of permits for marine mammals.

SUMMARY: The following permits were issued.

ADDRESSES: Documents and other information submitted with these applications are available for review, subject to the requirements of the Privacy Act and Freedom of Information Act, by any party who submits a written request for a copy of such documents to: U.S. Fish and Wildlife Service, Division of Management Authority, 4401 North Fairfax Drive, Room 700, Arlington, Virginia 22203; fax 703/358–2281.

FOR FURTHER INFORMATION CONTACT: Division of Management Authority, telephone 703/358–2104.

SUPPLEMENTARY INFORMATION: Notice is hereby given that on the dates below, as authorized by the provisions of the Marine Mammal Protection Act of 1972, as amended (16 U.S.C. 1361 *et seq.*), the Fish and Wildlife Service issued the requested permits subject to certain conditions set forth therein.

MARINE MAMMALS

Permit No.	Applicant	Receipt of application **Federal Register** notice	Permit issuance date
070056	John M. Gebbia	68 FR 20402, April 25, 2003	June 27, 2003.
070534	Walter P. Mays	68 FR 22409, April 28, 2003	June 27, 2003.

Dated: July 18, 2003.

Monica Farris,

Senior Permit Biologist, Branch of Permits, Division of Management Authority.

[FR Doc. 03–19414 Filed 7–29–03; 8:45 am]

BILLING CODE 4310–55–P

DEPARTMENT OF THE INTERIOR

Bureau of Land Management

[WO–350–1430–EU–24 1A]

OMB Approval Number 1004–0004; Information Collection Submitted to the Office of Management and Budget Under the Paperwork Reduction Act

The Bureau of Land Management (BLM) has sent a request to extend the current approved information collection to the Office of Management and Budget (OMB) under the provisions of the Paperwork Reduction Act of 1995 (44 U.S.C. 3501 *et seq.*). On July 11, 2002, the BLM published a notice in the **Federal Register** (67 FR 45984) requesting comment on this information collection. The comment period ended on September 9, 2002. BLM received no comments. You may obtain copies of the collection of information and related forms and explanatory material by contacting the BLM Information Collection Clearance Officer at the telephone number listed below.

The OMB must respond to this request within 60 days but may respond after 30 days. For maximum consideration your comments and suggestions on the requirement should be directed within 30 days to the Office of Management and Budget, Interior Department Desk Officer (1004–0004), at OMB–OIRA via facsimile to (202) 395–5806 or e-mail to *Ruth_Solomon@omb.eop.gov.* Please provide a copy of your comments to the Bureau Information Collection Clearance Office (WO–630), Bureau of Land Management, Eastern States Office, 7450 Boston Blvd., Springfield, Virginia 22153.

Nature of Comments: We specifically request your comments on the following:

1. Whether the collection of information is necessary for the proper functioning of the agency, including whether the information will have practical utility.

2. The accuracy of our estimates of the information collection burden, including the validity of the methodology and assumptions we use;

3. Ways to enhance the quality, utility and clarity of the information we collect; and

4. Ways to minimize the information collection burden on those who are to respond, including the use of appropriate automated, electronic, mechanical, or other forms of information technology.

Title: Desert-Land Entry (43 CFR 2520).

OMB Approval Number: 1004–0004.

Bureau Form Number: 2520–1.

Abstract: We use the information to determine if an individual is eligible to make a desert-land entry to reclaim, irrigate, and cultivate arid and semiarid public lands administered by the BLM in the Western States. The provisions of the Desert Land Act of March 3, 1877 as amended (43 U.S.C. 231, 321 *et seq.*), and the regulations in 43 CFR 2520 establish guidelines and procedures for the orderly and timely processing of applications for desert-land entries.

Frequency: Once.

Description of Respondents: Individuals, small businesses, and large corporations.

Estimated Completion Time: 2 hours.

Annual Response: 3.

Application Fee Per Response: $15.00.

Annual Burden Hours: 6.

Bureau Clearance Officer: Michael Schwartz, (202) 452–5033.

Dated: July 11, 2003.

Michael H. Schwartz,

Bureau of Land Management, Information Collection Clearance Officer.

[FR Doc. 03–19339 Filed 7–29–03; 8:45 am]

BILLING CODE 4310–84—M

DEPARTMENT OF THE INTERIOR

Bureau of Land Management

[WO–350–1430–ES–24 1A]

OMB Approval Number 1004–0012; Information Collection Submitted to the Office of Management and Budget Under the Paperwork Reduction Act

The Bureau of Land Management (BLM) has sent a request to extend the current approved information collection to the Office of Management and Budget (OMB) under the provisions of the Paperwork Reduction Act (44 U.S.C. 3501 *et seq.*). On July 11, 2002, the BLM published a notice in the **Federal Register** (67 FR 45986) requesting comment on this information collection. The comment period ended on September 9, 2002. The BLM received no comments. You may obtain copies of the collection of information and related forms and explanatory material by contacting the BLM Information Collection Clearance Officer at the telephone number listed below.

The OMB must respond to this request within 60 days but may respond after 30 days. For maximum consideration your comments and suggestions on the requirement should be directed within 30 days to the Office of Management and Budget, Interior Department Desk Officer (1004–0012), at OMB–OIRA via facsimile to (202) 395–5806 or e-mail to *Ruth Solomon@omb.eop.gov.* Please provide a copy of your comments to the Bureau Information Collection Clearance Officer (WO–630), Bureau of Land Management, Eastern States Office, 7450 Boston Blvd., Springfield, Virginia 22153.

Nature of Comments: We specifically request your comments on the following:

1. Whether the collection of information is necessary for the proper functioning of the agency, including whether the information will have practical utility;

2. The accuracy of our estimates of the information collection burden, including the validity of the methodology and assumptions we use;

3. Ways to enhance the quality, utility and clarity of the information we collect; and

4. Ways to minimize the information collection burden on those who are to respond, including the use of appropriate automated, electronic, mechanical, or other forms of information technology.

Title: Recreation and Public Purposes Act (43 CFR 2740).

OMB Approval Number: 1004–0012.

Bureau Form Number: 2740–1.

Abstract: We use the information to determine if States and local governments, and nonprofit corporations and associations are eligible to lease or purchase public lands administered by the BLM for recreational and public purposes under the terms of the Recreation and Purpose Act of June 14, 1926 (R&PP) as amended (43 U.S.C. 869 *et seq.*). The 43 CFR parts 2740 and 2912 provide guidelines and procedures to sell lease or sell certain public lands under the Act.

Frequency: Once.

Description of Respondents: States and local governments, and nonprofit corporations and associations.

Estimated Completion Time: 40 hours.

Annual Responses: 20.

Application Fee Per Response: $100.

Annual Burden Hours: 800.

Bureau Clearance Officer: Michael Schwartz, (202) 452–5033.

Dated: July 11, 2003.

Michael H. Schwartz,

Bureau of Land Management, Information Collection Clearance Officer.

[FR Doc. 03–19340 Filed 7–29–03; 8:45 am]

BILLING CODE 4310–84–M

DEPARTMENT OF THE INTERIOR

Bureau of Reclamation

Sacramento River Water Reliability Study

AGENCY: Bureau of Reclamation, Interior.

ACTION: Notice of intent to prepare an environmental impact statement/ environmental impact report (EIS/EIR) and notice of scoping meetings.

SUMMARY: Pursuant to the National Environmental Policy Act (NEPA) and the California Environmental Quality Act (CEQA), the Bureau of Reclamation (Reclamation) and the Placer County Water Agency (PCWA) propose to prepare a joint EIS/EIR for the Sacramento River Water Reliability Study (SRWRS). Reclamation is the Lead Federal Agency for NEPA and PCWA is Lead State Agency for CEQA. PCWA, Sacramento Suburban Water District (SSWD), and the cities of Roseville, and Sacramento are cost-sharing partners.

DATES: A series of public scoping meetings will be held to solicit public input on the alternatives, concerns, and issues to be addressed in the EIS/EIR as follows:

- Monday, September 15, 2003, 10 a.m. to 12 p.m., Sacramento, CA.
- Monday, September 15, 2003, 6 p.m. to 8 p.m., Sacramento, CA.
- Wednesday, September 17, 2003, 6 p.m. to 8 p.m., Willows, CA.
- Monday, September 22, 2003, 6 p.m. to 8 p.m., Yuba City, CA.
- Tuesday, September 23, 2003, 6 p.m. to 8 p.m., Stockton, CA.
- Wednesday, September 24, 2003, 6 p.m. to 8 p.m., Rocklin, CA.

Written comments on the scope of the EIS/EIR may be mailed to Reclamation or PCWA at the addresses below by Monday, October 12, 2003.

ADDRESSES: The meeting locations are:

- In Sacramento, Best Western Expo Inn, 1413 Howe Avenue, Expo Room.
- In Willows, Memorial Hall, 525 West Sycamore.
- In Yuba City, Sutter County Veterans Hall, 1425 Veterans Memorial Drive.
- In Stockton, Radisson Hotel, Delta IV Room, 2323 Grand Canal Blvd., Stockton, CA 95207.
- In Rocklin, Rocklin City Council Chambers, 3970 Rocklin Road, Rocklin, CA 95677.

Written comments on the scope of the EIS/EIR should be sent to: Ms. Mona Jefferies-Soniea, Bureau of Reclamation, 2800 Cottage Way, MP–700, Sacramento, CA 95825 or Mr. Steve Yaeger, c/o Ms. Darcy Granieri, Placer County Water Agency, P.O. Box 6570, Auburn, CA 95604–6570.

FOR FURTHER INFORMATION CONTACT: Ms. Jefferies-Soniea at the above address, at 916–978–5068, or via fax at 916–978–5094 or e-mail at *mjefferies-soniea@mp.usbr.gov;* or Mr. Yaeger at the above address or at 530–823–4962. Additional information is available online at *http://www.usbr.gov/mp/srwrs.* If special assistance is required, please call Ms. Sammie Cervantes, Reclamation, at 915–978–5104, TDD 916–978–5608, or via e-mail at *scervantes@mp.usbr.gov* no less than 5 working days prior to the meetings.

SUPPLEMENTARY INFORMATION: The SRWRS cost-sharing partners have identified their long-term needs for additional water supplies to meet growing water supply demands and reliability objectives in their respective service areas. The goal of the SRWRS is to develop a water supply plan that is consistent with the Water Forum Agreement (April 24, 2000) objectives of pursuing a Sacramento River diversion to meet water supply needs of the Placer-Sacramento region and promoting ecosystem preservation along the lower American River. The project location is the greater Sacramento metropolitan area, encompassing portions of southern Sutter County, northern Sacramento County, and western and southern Placer County.

Project Description

To meet the water supply needs of the cost-sharing partners, the SRWRS will identify a package of water supply infrastructure components, including new or expanded diversion(s) from the Sacramento, Feather, or American Rivers, and new or expanded water treatment and pumping facilities, storage tanks, and major transmission and distribution pipelines.

The SRWRS will include a feasibility study and an EIS/EIR for identified water supply alternatives as the basis for seeking necessary biological opinions and permits from the responsible resource agencies to allow execution of necessary agreements and construction of the recommended water supply infrastructure. Development of the SRWRS will be consistent with the following principles:

- Satisfying requirements stipulated in Public Law 106–554, the congressional authorizing legislation for this study, to complete a feasibility study for a Sacramento River diversion that is consistent with the Water Forum Agreement and includes the following components: (1) Development of a range of reasonable options, (2) an environmental evaluation, and (3) consultation with Federal and state resource management agencies regarding potential impacts and mitigation measures. Furthermore, the Congress requires the SRWRS to be developed in coordination with CALFED.
- Observing existing applicable laws, regulations, water rights, contracts and legal agreements, and Federal planning guidelines, including, but not limited to, NEPA, ''Economic and Environmental Principles and Guidelines for Water and Related Land Resources Implementation Studies,'' guidelines, CEQA, California Water Laws, obligations of the cost-sharing partners in their charters, and as defined in California laws.
- Minimizing overall impact on the environment to the extent feasible, being cost-effective, and complementing and enhancing the overall reliability of the Placer-Sacramento region's water supply system through increased interconnectivity and source redundancy.

The SRWRS plan will be consistent with the Water Forum Agreement in pursuing a Sacramento River diversion to accomplish the following objectives envisioned in the agreement: (1) Meeting the needs of planned future growth within the Placer-Sacramento region, (2) maintaining a reliable water supply while reducing diversions of surface water from the American River in future dry years to preserve the river ecosystem, and (3) enhancing groundwater conjunctive management to help sustain the quality and availability of groundwater for the future.

Project Alternatives

The proposed project (Elkhorn Diversion alternative) encompasses constructing a joint diversion from the Sacramento River and treatment facilities to serve the cost-sharing partners. The diversion facility would consist of expanding the existing Elkhorn Diversion owned by the Natomas Mutual Water Company (NMWC) on the east bank of the Sacramento River, upstream of the mouth of the American River at approximately river mile 73.3, or constructing a new diversion near the existing Elkhorn Diversion. Water

treatment, storage, and pumping facilities would be located near the river. Also, a transmission line would connect to the west end of the existing Cooperative Transmission Pipeline/Northridge Transmission Pipeline in Antelope to serve SSWD, and an extension of that line would be built north to the service areas of Roseville and PCWA. A separate transmission line would extend south to connect to Sacramento's existing distribution system.

The five alternatives currently under consideration in the SRWRS include the No Project/No Action Alternative and four additional alternatives. For these four alternatives, the partners may share facilities to a greater or lesser degree.

- The No Project/No Action Alternative would include only currently approved and permitted surface water resources for the cost-sharing partners. To meet projected water supply demands, the cost-sharing partners would reallocate available surface water and groundwater resources between municipal and industrial (M&I) and agricultural uses (PCWA only), and among different wholesale and retail areas.
- A Sankey Diversion alternative assumes that PCWA, SSWD, and Roseville would divert water from the Sacramento River near the confluence of the Sacramento River and the Natomas Cross Canal and build separate treatment, storage, and transmission facilities to meet their needs. This diversion would be located at or near the second diversion that NMWC is developing under its CALFED-supported diversion consolidation effort. Sacramento would use groundwater to meet projected unmet demand or would divert separately from the Sacramento River at the Elkhorn site, and construct its own treatment and transmission facilities to serve its needs.
- A Feather River alternative assumes that PCWA, SSWD, and Roseville would divert water from the Feather River and build separate treatment, storage, and transmission facilities to meet their needs. Sacramento would use groundwater to meet projected unmet demand or would divert separately from the Sacramento River at the Elkhorn site, and construct its own treatment and transmission facilities to serve its needs.
- An American River Pump Station alternative assumes that PCWA would expand its American River Pump Station near Auburn and construct new treatment and transmission facilities to serve its needs. SSWD would divert from the existing San Juan Water District (SJWD) diversion facilities at Folsom Dam. Roseville would increase use of groundwater to satisfy its needs in this alternative, but not have any additional surface water diversions. Sacramento would use groundwater to meet projected unmet demand or would divert separately from the Sacramento River at the Elkhorn site, and construct its own treatment and transmission facilities to serve its needs.
- A Folsom Dam alternative assumes that PCWA and SSWD would use the existing or expanded diversion, treatment, and transmission facilities of SJWD at Folsom Dam. Roseville would increase use of groundwater to satisfy its needs in this alternative, but not have any additional surface water diversions. Sacramento would use groundwater to meet projected unmet demand or would divert separately from the Sacramento River at the Elkhorn site, and construct its own treatment and transmission facilities to serve its needs.

Changes in Entitlements

Implementing a Sacramento River diversion for the cost-sharing partners would require a change in the point of diversion for PCWA's Central Valley Project contract and for Sacramento's Sacramento River water right permit, and an exchange agreement between PCWA and Reclamation for Roseville and SSWD diversions under their contract entitlements from PCWA's Middle Fork Project.

Water Delivery Quantities

The additional water supplies considered in the SRWRS for each cost-sharing partner include: (1) Additional water supply of up to 35,000 acre-feet for PCWA's M&I demand with a treatment capacity of 65 million gallons per day (mgd), (2) additional water supply of up to 29,000 acre-feet in Water Forum average, drier, and driest years for SSWD's M&I demand and groundwater stabilization program with a treatment capacity of 15 mgd, (3) additional water supply of up to 7,100 acre-feet for Roseville's M&I demand with a treatment capacity of 10 mgd, and (4) additional water supply of up to 58,000 acre-feet (see note below) with a water treatment capacity of 165 mgd for Sacramento's M&I demand.

Note on Sacramento's additional diversion: The Water Forum Agreement does not establish a volumetric limitation for Sacramento's total diversion, and the estimated additional water supply to meet its projected demand is about 58,000 acre-feet, based on the difference between the demand and the projected average diversion for Sacramento that could be realized in 2020 level of development using then-existing diversion facilities on the American and Sacramento rivers. (The 2030 level of statewide demand projection is currently under development by California Department of Water Resources.) However, Sacramento could divert up to 81,800 acre-feet under its water rights on the Sacramento River at the Elkhorn site by reducing the diversion under its Sacramento River water rights at its existing Sacramento River Water Treatment Plant downstream of the confluence with the American River.

Indian Trust Assets

There are Indian Trust Assets located in Placer County, held in trust by the United States for the United Auburn Indian Community of the Auburn Rancheria. Direct association between these assets and the proposed action are unknown at this time. There are no assets located in the greater Sacramento metropolitan area, southern Sutter County, or northern Sacramento County.

Written comments, including names and home addresses of respondents, will be made available for public review. Individual respondents may request that their home address be withheld from public disclosure, which will be honored to the extent allowable by law. There may be circumstances in which respondents' identity may also be withheld from public disclosure, as allowable by law. If you wish to have your name and/or address withheld, you must state this prominently at the beginning of your comment. All submissions from organizations or businesses, and from individuals identifying themselves as representatives or officials of organizations or businesses, will be made available for public disclosure in their entirety.

Dated: July 2, 2003.

Robert Eckart,

Chief, Environmental Compliance Branch, Mid-Pacific Region.

[FR Doc. 03–19307 Filed 7–29–03; 8:45 am]

BILLING CODE 4310–MN–P

INTERNATIONAL TRADE COMMISSION

[Inv. No. 337–TA–495]

Certain Breath Test Systems for the Detection of Gastrointestinal Disorders and Components Thereof; Notice of Investigation

AGENCY: U.S. International Trade Commission.

ACTION: Institution of investigation pursuant to 19 U.S.C. 1337.

SUMMARY: Notice is hereby given that a complaint was filed with the U.S. International Trade Commission on June 24, 2003, under section 337 of the Tariff Act of 1930, as amended, 19 U.S.C. 1337, on behalf of Meretek Diagnostics, Inc. of Lafayette, Colorado, and Medquest PTY, Ltd. of Perth, Australia. Supplements to the complaint were filed on July 11, 2003, and July 18, 2003. The complaint, as supplemented, alleges violations of section 337 in the importation into the United States, the sale for importation, and the sale within the United States after importation of certain breath test systems for the detection of gastrointestinal disorders and components thereof by reason of infringement of claims 1, 2, 3, and 5 of U.S. Patent No. 4,830,010. The complaint further alleges that an industry in the United States exists as required by subsection (a)(2) of section 337.

The complainant requests that the Commission institute an investigation and, after the investigation, issue a permanent exclusion order and permanent cease and desist orders.

ADDRESSES: The complaint and supplements, except for any confidential information contained therein, are available for inspection during official business hours (8:45 a.m. to 5:15 p.m.) in the Office of the Secretary, U.S. International Trade Commission, 500 E Street, SW., Room 112, Washington, DC 20436, telephone 202–205–2000. Hearing impaired individuals are advised that information on this matter can be obtained by contacting the Commission's ADD terminal on 202–205–1810. Persons with mobility impairments who will need special assistance in gaining access to the Commission should contact the Office of the Secretary at 202–205–2000. General information concerning the Commission may also be obtained by accessing its Internet server at *http://www.usitc.gov.* The public record for this investigation may be viewed on the Commission's electronic docket (EDIS) at *http://edis.usitc.gov*.

FOR FURTHER INFORMATION CONTACT: David O. Lloyd, Esq., Office of Unfair Import Investigations, U.S. International Trade Commission, telephone 202–205–2576.

Authority: The authority for institution of this investigation is contained in section 337 of the Tariff Act of 1930, as amended, and in section 210.10 of the Commission's Rules of Practice and Procedure, 19 CFR 210.10 (2003).

Scope of Investigation: Having considered the complaint, the U.S. International Trade Commission, on July 22, 2003, *Ordered* That—

(1) Pursuant to subsection (b) of section 337 of the Tariff Act of 1930, as amended, an investigation be instituted to determine whether there is a violation of subsection (a)(1)(B) of section 337 in the importation into the United States, the sale for importation, or the sale within the United States after importation of certain breath test systems for the detection of gastrointestinal disorders or components thereof by reason of infringement of claims 1, 2, 3, or 5 of U.S. Patent No. 4,830,010 and whether an industry in the United States exists as required by subsection (a)(2) of section 337.

(2) For the purpose of the investigation so instituted, the following are hereby named as parties upon which this notice of investigation shall be served:

(a) The complainants are—

Meretek Diagnostics, Inc., 2655 Crescent Dr., Ste. C, Lafayette, CO 80026.

Medquest PTY, Ltd., 59 Ellesmere St., Mount Hawthorn, Perth, Western Australia.

(b) The respondents are the following companies alleged to be in violation of section 337, and are the parties upon which the complaint is to be served:

Oridion Systems, Ltd., 7 HaMarpe St., Har Hotzvim Science Based Industrial Park, POB 45025, 91450 Jerusalem, Israel.

Oridion Medical 1987 Ltd., 7 HaMarpe St., Har Hotzvim Science Based Industrial Park, POB 45025, 91450 Jerusalem, Israel.

Oridion BreathID Ltd., 7 HaMarpe St., Har Hotzvim Science Based Industrial Park, POB 45025, 91450 Jerusalem, Israel.

Oridion BreathID Inc., 21 Highland Circle, Needham, MA 02494.

(c) David O. Lloyd, Esq., Office of Unfair Import Investigations, U.S. International Trade Commission, 500 E Street, SW., Room 401, Washington, DC 20436, who shall be the Commission investigative attorney, party to this investigation; and

(3) For the investigation so instituted, the Honorable Paul J. Luckern is designated as the presiding administrative law judge.

Responses to the complaint and the notice of investigation must be submitted by the named respondents in accordance with section 210.13 of the Commission's Rules of Practice and Procedure, 19 CFR 210.13. Pursuant to 19 CFR 201.16(d) and 210.13(a), such responses will be considered by the Commission if received no later than 20 days after the date of service by the Commission of the complaint and the notice of investigation. Extensions of time for submitting responses to the complaint will not be granted unless good cause therefor is shown.

Failure of a respondent to file a timely response to each allegation in the complaint and in this notice may be deemed to constitute a waiver of the right to appear and contest the allegations of the complaint and to authorize the administrative law judge and the Commission, without further notice to that respondent, to find the facts to be as alleged in the complaint and this notice and to enter both an initial determination and a final determination containing such findings, and may result in the issuance of a limited exclusion order or a cease and desist order or both directed against that respondent.

Issued: July 24, 2003.

By order of the Commission.

Marilyn R. Abbott,

Secretary to the Commission.

[FR Doc. 03–19304 Filed 7–29–03; 8:45 am]

BILLING CODE 7020–02–P

DEPARTMENT OF JUSTICE

Office of Community Policing Services; Agency Information Collection Activities; Proposed Collection; Comments Requested

ACTION: 30-Day Notice of Information Collection Under Review; COPS Universal Hiring Program (UHP) and COPS in Schools (CIS) and Homeland Security Overtime Program Grant Applications.

The Department of Justice (DOJ), Office of Community Policing Services (COPS) has submitted the following information collection request to the Office of Management and Budget (OMB) for review and approval in accordance with the Paperwork Reduction Act of 1995. The proposed information collection is published to obtain comments from the public and affected agencies. This proposed information collection was previously published in the **Federal Register** Volume 67, Number 219, page 68885 on November 13, 2002, allowing for a 60 day comment period.

The purpose of this notice is to allow an additional 30 days for public comment until August 29, 2003. This process is conducted in accordance with 5 CFR 1320.10.

Written comments and/or suggestions regarding the item(s) contained in each notice, especially regarding the estimated public burden and associated response time, should be directed to the Office of Management and Budget, Office of Information and Regulatory Affairs, Attention: Department of Justice Desk Officer, Washington, DC 20530.

Written comments and suggestions from the public and affected agencies concerning the proposed collection of information should address one or more of the following four points:

(1) Evaluate whether the proposed collection of information is necessary for the proper performance of the function of the agency, including whether the information will have practical utility;

(2) Evaluate the accuracy of the agency's estimate of the burden of the proposed collection of information, including the validity of the methodology and assumptions used;

(3) Enhance the quality, utility, and clarity of the information to be collected; and

(4) Minimize the burden of the collection of information on those who are to respond, including through the use of appropriate automated, electronic, mechanical, or other technological collection techniques or other forms of information technology, *e.g.*, permitting electronic submission of responses.

Overview of This Information

(1) *Type of information collection:* Revision to a currently approved collection.

(2) *The title of the form/collection:* Universal Hiring Program and COPS in Schools and Homeland Security Overtime Program Grant Applications.

(3) *The agency form number, if any, and the applicable component of the Department sponsoring the collection:* Form number: none. Sponsoring component: Office of Community Oriented Policing Services, United States Department of Justice.

(4) *Affected public who will be asked or required to respond, as well as a brief abstract:* Primary: State, local and tribal governments. Other: none. The COPS Office requests OMB approval of a revision to a currently approved collection. The Universal Hiring Program (UHP), COPS in Schools (CIS) program, and Homeland Security Overtime Program (HSOP) all promote the practice of community policing and use essentially the same application, with only minor differences in the types of questions asked due to the different focuses of the programs. The UHP and CIS programs allow law enforcement agencies to supplement their current law enforcement forces or establish a new ''start-up'' municipal law enforcement agency. CIS grantees are required to place any officer positions awarded in the local schools for at least 75% of their normal duty shift. HSOP permits applicants to supplement their current overtime budget for homeland security training sessions and other law enforcement activities that are designed to help prevent acts of terrorism.

(5) *An estimate of the total number of respondents and the amount of time estimated for an average respondent to respond/reply:* An estimated 6,300 respondents will submit applications for either the UHP, CIS, or HSOP program. COPS estimates it will take respondents approximately 5 hours to complete their applications.

(6) *An estimate of the total public burden (in hours) associated with the collection:* The total public burden is estimated at 31,500 annual burden hours for this combined application kit.

FOR FURTHER INFORMATION CONTACT: Brenda E. Dyer, Deputy Clearance Officer, United States Department of Justice, Justice Management Division, Policy and Planning Staff, Patrick Henry Building, Suite 1600, 601 D Street NW., Washington, DC 20530.

Dated: July 24, 2003.

Brenda E. Dyer,

Deputy Clearance Officer, Department of Justice.

[FR Doc. 03–19293 Filed 7–29–03; 8:45 am]

BILLING CODE 4410–AT–P

DEPARTMENT OF JUSTICE

Executive Office for United States Attorneys; Agency Information Collection Activities: Proposed Collection; Comments Requested

ACTION: 60-day notice of information collection under review: Office of Legal Education Nomination/Confirmation Form.

The Department of Justice (DOJ), Executive Office for United States Attorneys, (EOUSA,) has submitted the following information collection request to the Office of Management and Budget (OMB) for review and approval in accordance with the Paperwork Reduction Act of 1995. The proposed information collection is published to obtain comments from the public and affected agencies. Comments are encouraged and will be accepted for ''sixty days'' until September 29, 2003. This process is conducted in accordance with 5 CFR 1320.10.

If you have comments especially on the estimated public burden or associated response time, suggestions, or need a copy of the proposed information collection instrument with instructions or additional information, please contact Michele Zozom, (202) 616–6969, Executive Office for United States Attorneys, U.S. Department of Justice, 600 E Street, NW., Washington, DC 20531.

Written comments and suggestions from the public and affected agencies concerning the proposed collection of information are encouraged. Your comments should address one or more of the following four points:

(1) Evaluate whether the proposed collection of information is necessary for the proper performance of the functions of the agency, including whether the information will have practical utility;

(2) Evaluate the accuracy of the agencies estimate of the burden of the proposed collection of information, including the validity of the methodology and assumptions used;

(3) Enhance the quality, utility, and clarity of the information to be collected; and

(4) Minimize the burden of the collection of information on those who are to respond, including through the use of appropriate automated, electronic, mechanical, or other technological collection techniques or other forms of information technology, *e.g.*, permitting electronic submission of responses.

Overview of this information collection:

(1) *Type of information collection:* Existing collection in use without an OMB control number.

(2) *The title of the form/collection:* Office of Legal Education Nomination Form.

(3) *The agency form number, if any, and the applicable component of the Department sponsoring the collection:* DOJ Form Number, none. Office of Legal Education, Executive Office for United States Attorneys, Department of Justice.

(4) *Affected public who will be asked or required to respond, as well as a brief abstract:* Respondents will be current and potential users of agency training services. Respondents may represent Federal agencies, as well as State, local, and tribal governments. The Executive Office for United States Attorneys will use the collected information to select class participants, arrange for transportation and reserve rooms; have an address to contact the participant, and an emergency contact.

(5) *An estimate of the total number of respondents and the amount of time*

estimated for an average respondent to respond/reply: It is estimated that there will be 2,140 responses annually. It is estimated that each form will take 5 minutes to complete.

(6) *An estimate of the total public burden (in hours) associated with the collection:* An estimate of the total hour burden to conduct this survey is 1,750 hours.

If additional information is required contact: Brenda E. Dyer, Deputy Clearance Officer, Policy and Planning Staff, Justice Management Division, United States Department of Justice, Patrick Henry Building, Suite 1600, 601 D Street NW., Washington, DC 20530.

Dated: July 24, 2003.

Brenda E. Dyer,

Deputy Clearance Officer, Department of Justice.

[FR Doc. 03–19295 Filed 7–29–03; 8:45 am]

BILLING CODE 4410–07–P

DEPARTMENT OF JUSTICE

Bureau of Alcohol, Tobacco, Firearms and Explosives

Agency Information Collection Activities: Proposed Collection; Comments Requested

ACTION: 60-day notice of information collection under review: State and Local Training Registration Request.

The Department of Justice (DOJ), Bureau of Alcohol, Tobacco, Firearms and Explosives (ATF), has submitted the following information collection request to the Office of Management and Budget (OMB) for review and approval in accordance with the Paperwork Reduction Act of 1995. The proposed information collection is published to obtain comments from the public and affected agencies. Comments are encouraged and will be accepted for ''sixty days'' until September 29, 2003. This process is conducted in accordance with 5 CFR 1320.10.

If you have comments especially on the estimated public burden or associated response time, suggestions, or need a copy of the proposed information collection instrument with instructions or additional information, please contact Don Robinson, Chief, State and Local Training Branch, 800 K Street, NW., Suite 600, Washington, DC 20091.

Request written comments and suggestions from the public and affected agencies concerning the proposed collection of information are encouraged. Your comments should address one or more of the following four points:

(1) Evaluate whether the proposed collection of information is necessary for the proper performance of the functions of the agency, including whether the information will have practical utility;

(2) Evaluate the accuracy of the agencies estimate of the burden of the proposed collection of information, including the validity of the methodology and assumptions used;

(3) Enhance the quality, utility, and clarity of the information to be collected; and

(4) Minimize the burden of the collection of information on those who are to respond, including through the use of appropriate automated, electronic, mechanical, or other technological collection techniques or other forms of information technology, *e.g.*, permitting electronic submission of responses.

Overview of this information collection:

(1) *Type of Information Collection:* Extension of a currently approved collection.

(2) *Title of the Form/Collection:* State and Local Training Registration Request.

(3) *Agency form number, if any, and the applicable component of the Department of Justice sponsoring the collection:* Form Number: ATF F 6400.1. Bureau of Alcohol, Tobacco, Firearms and Explosives.

(4) *Affected public who will be asked or required to respond, as well as a brief abstract:* Primary: State, local, or Tribal Government. Other: None. The Bureau of Alcohol, Tobacco, Firearms and Explosives provides arson and explosives investigative techniques training to State and local investigators. The registration request form will be used by prospective students.

(5) *An estimate of the total number of respondents and the amount of time estimated for an average respondent to respond:* It is estimated that 500 respondents will complete a 6 minute form.

(6) *An estimate of the total public burden (in hours) associated with the collection:* There are 50 estimated total annual burden hours associated with this collection.

If additional information is required contact: Brenda E. Dyer, Deputy Clearance Officer, Information Management and Security Staff, Justice Management Division, Department of Justice, Patrick Henry Building, Suite 1600, 601 D Street NW., Washington, DC 20530.

Dated: July 24, 2003.

Brenda E. Dyer,

Deputy Clearance Officer, Department of Justice.

[FR Doc. 03–19294 Filed 7–29–03; 8:45 am]

BILLING CODE 4410–FB–P

DEPARTMENT OF LABOR

Office of the Secretary

Colombian Trade Union Training Program; Correction

AGENCY: Bureau of International Labor Affairs, Department of Labor.

ACTION: Correction.

SUMMARY: In notice document 03–16545 beginning on page 39111 in the issue of Tuesday, July 1, 2003, make the following corrections:

1. On page 39111 in the third column, the closing date for receipt of applications is listed as Friday, August 8, 2003. This should be changed to Friday, August 15, 2003.

2. On page 39112 in the third column, replace the last paragraph of Section II.A. with the following paragraph, ''Please note that to be eligible, grant applicants classified under the Internal Revenue Code as a 501(c)(4) entity (*see* 26 U.S.C. 501(c)(4)), may not engage in lobbying activities. According to the Lobbying Disclosure Act of 1995, as amended by 2 U.S.C. 1611, an organization, as described in section 501(c)(4) of the Internal Revenue Code of 1986, that engages in lobbying activities shall not be eligible for the receipt of federal funds constituting an award, grant, or loan.''

3. On page 39112 in the third column, paragraph 2 of Section II.B., add the following sentence, to the end of the paragraph, ''The application should include the name, address, telephone and fax numbers, and e-mail address (if applicable) of a key contact person at the applicant's organization in case questions should arise.''

4. On page 39113 in the first column, paragraph 2 of Section II.C., the date ''Friday, August 8, 2003'' should be changed to ''Friday, August 15, 2003.''

5. On page 39113 in the first column, paragraph 2 of Section II.C., the phrase ''[Enter Date]'' should be changed to ''the closing date'' (the replacement occurs in two different places in the paragraph).

Signed at Washington, DC, this 22nd day of July 2003.

Lawrence J. Kuss,

Grant Officer.

[FR Doc. 03–19322 Filed 7–29–03; 8:45 am]

BILLING CODE 4510–28–P

DEPARTMENT OF LABOR

Office of the Secretary

Developing a Serbian Labor Inspectorate for the 21st Century; Correction

AGENCY: Bureau of International Labor Affairs, Department of Labor.

ACTION: Correction.

SUMMARY: In notice document 03–16546 beginning on page 39132 in the issue of Tuesday, July 1, 2003, make the following corrections:

1. On page 39132 in the first column, the closing date for receipt of applications is listed as Friday, August 8, 2003. This should be changed to Friday, August 15, 2003.

2. On page 39132 in the third column, replace the last paragraph of Section II.A. with the following paragraph, ''Please note that to be eligible, grant applicants classified under the Internal Revenue Code as a 501(c)(4) entity (*see* 26 U.S.C. 501(c)(4)), may not engage in lobbying activities. According to the Lobbying Disclosure Act of 1995, as amended by 2 U.S.C. 1611, an organization, as described in section 501(c)(4) of the Internal Revenue Code of 1986, that engages in lobbying activities shall not be eligible for the receipt of federal funds constituting an award, grant, or loan.''

3. On page 39133 in the first column, paragraph 2 of Section II.B., add the following sentence, to the end of the paragraph, ''The application should include the name, address, telephone and fax numbers, and e-mail address (if applicable) of a key contact person at the applicant's organization in case questions should arise.''

4. On page 39133 in the second column, paragraph 2 of Section II.C., the date ''Friday, August 8, 2003'' should be changed to ''Friday, August 15, 2003.''

5. On page 39133 in the second column, paragraph 2 of Section II.C., the phrase ''[Enter Date]'' should be changed to ''the closing date'' (the replacement occurs in two different places in the paragraph).

Signed at Washington, DC, this 22nd day of July, 2003.

Lawrence J. Kuss,

Grant Officer.

[FR Doc. 03–19323 Filed 7–29–03; 8:45 am]

BILLING CODE 4510–28–P

DEPARTMENT OF LABOR

Occupational Safety and Health Administration

[Docket No. ICR–1218–0190(2003)

Standards on Electrical Protective Equipment (29 CFR 1910.137) and Electric Power Generation, Transmission, and Distribution (29 CFR 1910.269); Extension of the Office of Management and Budget's Approval of Information Collection (Paperwork) Requirements

AGENCY: Occupational Safety and Health Administration (OSHA), Labor.

ACTION: Request for comment.

SUMMARY: OSHA requests comment concerning its proposed extension of the information collection requirements specified by its standards on Electrical Protective Equipment (29 CFR 1910.137) and Electric Power Generation, Transmission, and Distribution (29 CFR 1910.269).

The collections of information are needed to help employers ensure that electrical protective equipment is maintained in a safe, reliable condition and employees have received the training required by § 1910.269. The information will also be provided to OSHA compliance officers during inspections.

DATES: Comments must be submitted by the following dates:

Hard Copy: Your comments must be submitted (postmarked or received) by September 29, 2003.

Facsimile and electronic transmission: Your comments must be received by September 29, 2003.

ADDRESSES:

I. Submission of Comments

Regular mail, express delivery, hand-delivery, and messenger service: Submit your comments and attachments to the OSHA Docket Office, Docket No. ICR 1218–0190 (2003), Room N–2625, U.S. Department of Labor, 200 Constitution Avenue, NW., Washington, DC 20210. OSHA Docket Office and Department of Labor hours of operation are 8:15 a.m. to 4:45 p.m., e.s.t.

Facsimile: If your comments, including any attachments, are 10 pages or fewer, you may fax them to the OSHA Docket Office at (202) 693–1648. You must include the docket number, ICR 1218–0199 (2003), in your comments.

Electronic: You may submit comments, but not attachments, through the Internet at *http://ecomments.osha.gov/.*

You may submit comments in response to this document by (1) hard copy, (2) FAX transmission (facsimile), or (3) electronically through the OSHA Web page. Please note you cannot attach materials such as studies or journal articles to electronic comments. If you have additional materials, you must submit three copies of them to the OSHA Docket Office at the address above. The additional materials must clearly identify your electronic comments by name, date, subject and docket number so we can attach them to your comments. Because of security-related problems there may be a significant delay in the receipt of comments by regular mail. Please contact the OSHA Docket Office at (202) 693–2350 for information about security procedures concerning the delivery of materials by express delivery, hand delivery, and messenger service.

FOR FURTHER INFORMATION CONTACT: Theda Kenney, Directorate of Standards and Guidance, OSHA, U.S. Department of Labor, Room N–3609, 200 Constitution Avenue, NW., Washington, DC 20210; telephone (202) 693–2222.

SUPPLEMENTARY INFORMATION:

I. Background

The Department of Labor, as part of its continuing effort to reduce paperwork and respondent (*i.e.* employer) burden, conducts a preclearance consultation program to provide the public with an opportunity to comment on proposed and continuing information collection requirements in accordance with the Paperwork Reduction Act of 1995 (44 U.S.C. 3506(c)(2)(A)) (PRA–95). This program ensures that information is in the desired format, reporting burden (time and costs) is minimized, collection instruments are understandable, and OSHA's estimate of the information collection burden is correct.

Under § 1910.137(b)(2)(xii), employers must certify that the electrical protective equipment used by their employees passed the tests specified in paragraphs (b)(2)(viii), (b)(2)(ix), and (b)(2)(xi) of the standard. The certification must identify the equipment that passed the tests and the dates of the tests. This provision helps ensure that electrical protective equipment is reliable and safe for employee use and will provide adequate protection against electric shock. In addition, certification helps OSHA to determine if employers are in compliance with the equipment-testing requirements of the standard.

II. Obtaining Copies of the Supporting Statement for the Information Collection Request

The Supporting Statement for the Information Collection Request (ICR) is available for downloading from OSHA's Web site at *www.osha.gov.* The complete ICR, containing the OMB–83–I Form, Supporting Statement, and attachments, is available for inspection and copying in the OSHA Docket Office, at the address listed above. A printed copy of the ICR can be obtained by contacting Theda Kenney at (202) 693–2222.

Section 1910.269(a)(2)(vii) requires employers to certify that each employee received the training specified in paragraph (a)(2) of the standard. Employers must provide certification after an employee demonstrates proficiency in the work practices involved.

The training conducted under paragraph (a)(2) of the standard ensures that: Employees are familiar with the safety-related work practices, safety procedures, and other procedures, as well as any additional safety requirements in the standard, that pertain to their respective job assignments; employees are familiar with any other safety practices, including applicable emergency procedures (such as pole top and manhole rescue), addressed specifically by this standard that relate to their work and are necessary for their safety; and qualified employees have the skills and techniques necessary to distinguish exposed live parts from other parts of electric equipment, can determine the nominal voltage of the exposed live parts, know the minimum approach distances specified by the standard for voltages when exposed to them, and understand the proper use of special precautionary techniques, personal protective equipment, insulating and shielding materials, and insulated tools for working on or near exposed and energized parts of electric equipment.

Employees must receive additional training or retraining if: The supervision and annual inspections required by the standard indicate that they are not complying with the required safety-related work practices; new technology or equipment, or revised procedures, require the use of safety-related work practices that differ from their usual safety practices; and they use safety-related work practices that are different than their usual safety practices while performing job duties.

The training requirements of this standard inform employees of the safety hazards of electrical exposure and provide them with the understanding required to minimize these safety hazards. In addition, employees receive proper training in safety-related work practices, safety procedures, and other safety requirements specified in the standard. The required training, therefore, provides information to employees that enables them to recognize how and where electrical and other hazardous exposures occur, and what steps to take, including work practices, to limit such exposure. The certification requirement specified by paragraph (a)(2)(vii) of the standard helps employers monitor the training their employees received and helps OSHA determine if employers provided the required training to their employees.

II. Special Issues for Comment

OSHA has a particular interest in comments on the following issues:

- Whether the proposed information collection requirements are necessary for the proper performance of the Agency's functions to protect workers, including whether the information is useful;
- The accuracy of OSHA's estimate of the burden (time and costs) of the information collection requirements, including the validity of the methodology and assumptions used;
- The quality, utility, and clarity of the information collected; and
- Ways to minimize the burden on employers who must comply; for example, by using automated or other technological information collection and transmission techniques.

III. Proposed Actions

OSHA proposes to extend the Office of Management and Budget's (OMB) approval of the information collection requirements specified by the standards on Electrical Protective Equipment (29 CFR 1910.137) and Electric Power Generation, Transmission, and Distribution (29 CFR 1910.269). The Agency will summarize the comments submitted in response to this notice, and will include this summary in its request to OMB to extend the approval of these information collection requirements.

Type of Review: Extension of a currently-approved information collection requirement.

Title: Electrical Protective Equipment (29 CFR 1910.137) and Electric Power Generation, Transmission, and Distribution (29 CFR 1910.269).

OMB Number: 1218–0190.

Affected Public: Business or other for-profit; not-for-profit institutions; State, local or tribal government; Federal Government.

Number of Respondents: 12,195.

Frequency of Recordkeeping: On occasion; semi-annually; annually.

Average Time per Response: Varies from one minute (.02 hour) to 15 minutes (.25 hour).

Total Annual Hours Requested: 22,685.

IV. Authority and Signature

John L. Henshaw, Assistant Secretary of Labor for Occupational Safety and Health, directed the preparation of this notice. The authority for this notice is the Paperwork Reduction Act of 1995 (44 U.S.C. 3506), and Secretary of Labor's Order No. 5–2002 (67 FR 65008).

Signed at Washington, DC on July 25, 2003.

John L. Henshaw,

Assistant Secretary of Labor.

[FR Doc. 03–19345 Filed 7–29–03; 8:45 am]

BILLING CODE 4510–26–M

DEPARTMENT OF LABOR

Occupational Safety and Health Administration

[Docket No. ICR–1218–0108 (2003)]

Standard on Ethylene Oxide (EtO) (29 CFR 1910.1047); Extension of the Office of Management and Budget's (OMB) Approval of Information–Collection (Paperwork) Requirements

AGENCY: Occupational Safety and Health Administration (OSHA); Labor.

ACTION: Request for comment.

SUMMARY: OSHA requests comment concerning its proposed extension of the information-collection requirements contained in the Ethylene Oxide Standard (the ''EtO Standard'') (29 CFR 1910.1047).

DATES: Comments must be submitted by the following dates:

Hard Copy: Your comments must be submitted (postmarked or received) by September 29, 2003.

Facsimile and electronic transmission: Your comments must be received by September 29, 2003.

ADDRESSES:

I. Submission of Comments

Regular mail, express delivery, hand-delivery, and messenger service: Submit your comments and attachments to the OSHA Docket Office, Docket No. ICR 1218–0108 (2003), Room N–2625, U.S. Department of Labor, 200 Constitution Avenue, NW., Washington, DC 20210. OSHA Docket Office and Department of Labor hours of operation are 8:15 a.m. to 4:45 p.m., est.

Facsimile: If your comments, including any attachments, are 10 pages or fewer, you may fax them to the OSHA Docket Office at (202) 693–648. You must include the docket number, ICR 1218–0108 (2003), in your comments.

Electronic: You may submit comments, but not attachments, through the Internet at *http://ecomments.osha.gov/.*

You may submit comments in response to this document by (1) hard copy, (2) FAX transmission (facsimile), or (3) electronically through the OSHA web page. Please not you cannot attach materials such as studies or journal articles to electronic comments. if you have additional materials, you must submit three copies of them to the OSHA Docket Office at the address above. The additional materials must clearly identify your electronic comments by name, date, subject and docket number so we can attach them to your comments. Because of security-related problems there may be a significant delay in the receipt of comments by regular mail. Please contact the OSHA Docket office at (202) 693–2350 for information about security procedures concerning the delivery of materials by express delivery, hand delivery and messenger service.

II. Obtaining Copies of the Information Collection Request

The Supporting Statement of the Information Collection Request (ICR) is available for downloading form OSHA's web site at *www.osha.gov.* The complete ICR, containing the OMB83–I Form, Supporting Statement, and attachments, is available for inspection and copying in the OSHA Docket Office, at the address listed above. A printed copy of the ICR can be obtained by contacting Todd Owen at (202) 693–2222.

FOR FURTHER INFORMATION CONTACT: Todd Owen, Directorate of Standards and Guidance, OSHA, U.S. Department of Labor, Room N–3609, 200 Constitution Avenue, NW., Washington, DC 20210; telephone (202) 693–2222.

SUPPLEMENTARY INFORMATION:

I. Background

The Department of Labor, as part of its continuing effort to reduce paperwork and Respondent (*i.e.,* employer) burden, conducts a preclearance consultation program to provide the public with an opportunity to comment on proposed and continuing information-collection requirements in accordance with the Paperwork Reduction Act of 1995 (PRA–95) (44 U.S.C. 3506(c)(2)(A)). This program ensures that information is in the desired format, reporting burden (time and costs) is minimal, collection instruments clearly understood, and OSHA's estimate of the information burden is correct. The Occupational Safety and Health Act of 1970 (the Act) authorizes information collection by employers as necessary or appropriate for enforcement of the Act of for developing information regarding the causes and prevention of occupational injuries, illnesses, and accidents (29 U.S.C. 657).

The information-collection requirements specified in the EtO Standard protect employees from the adverse health effects that may result from their exposure to EtO. The major information-collection requirements of the EtO Standard include notifying employees of their EtO exposures, implementing a written compliance program, providing examining physicians with specific information, ensuring that employees receive a copy of their medical-examination results, maintaining employees' exposure-monitoring and medical records for specific periods, and providing access to these records by OSHA, the National Institute for Occupational Safety and Health, the affected employees, and their authorized representatives.

II. Special Issues for Comment

OSHA has a particular interest in comments on the following issues:

Whether the proposed information-collection requirements are necessary for the proper performance of the Agency's functions to protect workers, including whether the information is useful;

- The accuracy of OSHA's estimate of the burden (time and costs) of the information-collection requirements, including the validity of the methodology and assumptions used;
- The quality, utility, and clarity of the information collected; and
- Ways to minimize the burden on employers who must comply; for example, by using automated or other technological information collection and transmission techniques.

III. Proposed Actions

OSHA proposes to decrease the existing burden-hour estimate, and to extend OMB's approval, of the collection-of-information requirements contained in the EtO Standard. The Agency is decreasing its previous estimate of 49,200 hours to 43,991 hours. This 5,209 hour decrease mainly results from the 313 new hospitals identified in the previous ICR completing one time activities such as initial exposure-monitoring and initial employee medical examinations. The Agency will summarize the comments submitted in response to this notice, and will include this summary in its request to OMB to extend the approval of these information-collection requirements.

Type of Review: Extension of currently approved information-collection requirement.

Title: Ethylene Oxide Standard (29 CFR 1910.1047).

OMB Number: 1218–0108.

Affected Public: Business or other for-profit; Federal government, state, local or tribal government.

Number of Respondents: 5,667.

Frequency: On occasion.

Total Responses: 232,564.

Average Time per Response: Varies from 5 minutes to provide information to the examining physician to 2 hours for employees to receive medical examinations.

Estimated Total Burden Hours: 43,991.

Estimated Cost (Operation and Maintenance): $6,595,597.

IV. Authority and Signature

John L. Henshaw, Assistant Secretary of Labor for Occupational Safety and Health, directed the preparation of this notice. The authority for this notice is the Paperwork Reduction Act of 1995 (44 U.S.C. 3506) and Secretary of Labor's Order No. 5–2002 (67 FR 65008).

Signed at Washington, DC, on July 25, 2003.

John L. Henshaw,

Assistant Secretary of Labor.

[FR Doc. 03–19346 Filed 7–29–03; 8:45 am]

BILLING CODE 4510–26–M

NATIONAL AERONAUTICS AND SPACE ADMINISTRATION

[Notice (03–086)]

NASA Advisory Council, Biological and Physical Research Advisory Committee Audio Teleconference

AGENCY: National Aeronautics and Space Administration.

ACTION: Notice of meeting.

SUMMARY: In accordance with the Federal Advisory Committee Act, Public Law 92–463, as amended, the National Aeronautics and Space Administration announces a meeting of the NASA Advisory Council, Biological and Physical Research Advisory Committee.

DATES: Thursday, August 14, 2003, from 11 a.m. until 1 p.m.

ADDRESSES: NASA Headquarters, 300 E Street SW., Room 8E26, Washington, DC 20546.

FOR FURTHER INFORMATION CONTACT: Dr. Bradley Carpenter, Code UG, National Aeronautics and Space Administration, Washington, DC 20546, 202/358–0826.

SUPPLEMENTARY INFORMATION: The meeting will be open to the public up to the seating capability of the meeting room. Due to the increased security at NASA facilities, any members of the public who wish to attend this meeting of the Biological and Physical Research Advisory Committee must provide their name, date and place of birth, citizenship, social security number, or passport and visa information (number, country of issuance and expiration), business address and phone number, if any. This information is to be provided at least 72 hours (11 a.m. EDT on August 11, 2003) prior to the date of the public meeting. Identification information is to be provided to Dr. Bradley Carpenter at 202/358–0826 or via e-mail at *bcarpenter@hq.nasa.gov.* Failure to timely provide such information may result in denial of attendance. Photo identification may be required for entry into the building. Persons with disabilities who require assistance should indicate this in their message. Due to limited availability of seating, members of the public will be admitted on a first-come, first-serve basis. News media wishing to attend the meeting should follow standard accreditation procedures. Members of the press who have questions about these procedures should contact the NASA Headquarters newsroom (202/358–1600). The agenda for the meeting is as follows:

- Performance Measures

It is imperative that the meeting be held on this date to accommodate the scheduling priorities of the key participants. Visitors will be requested to sign a visitor's register.

June W. Edwards,

Advisory Committee Management Officer, National Aeronautics and Space Administration.

[FR Doc. 03–19370 Filed 7–29–03; 8:45 am]

BILLING CODE 7510–01–P

NATIONAL AERONAUTICS AND SPACE ADMINISTRATION

[Notice (03–087)]

Notice of Prospective Patent License

AGENCY: National Aeronautics and Space Administration.

ACTION: Notice of Prospective Patent License.

SUMMARY: NASA hereby gives notice that the Keymaster Technologies, Inc., a Delaware corporation, has applied for an exclusive license to practice the inventions disclosed in NASA Case Nos. MFS–31898–1 entitled ''Methods for Identification and Verification Using Vacuum XRF System'' and MFS–31886–1 entitled Methods for Identification and Verification Using Digital Equivalent Data System.'' Written objections to the prospective grant of a license should be sent to Mr. James J. McGroary, Patent Counsel/LS01, Marshall Space Flight Center, Huntsville, AL 35812. NASA has not yet made a determination to grant the requested license and may deny the requested license even if no objections are submitted within the comment period.

DATES: Responses to this notice must be received by August 14, 2003.

FOR FURTHER INFORMATION CONTACT: Sammy A. Nabors, Technology Transfer Department/CD30, Marshall Space Flight Center, Huntsville, AL 35812, telephone (256) 544–5226.

Dated: July 17, 2003.

Robert M. Stephens,

Deputy General Counsel.

[FR Doc. 03–19369 Filed 7–29–03; 8:45 am]

BILLING CODE 7510–01–P

NATIONAL AERONAUTICS AND SPACE ADMINISTRATION

[Notice: (03–085)]

Availability for Comment; Draft Test Protocol for Detecting Possible Biohazards in Martian Samples Returned to Earth

AGENCY: National Aeronautics and Space Administration (NASA).

ACTION: Availability for comment.

SUMMARY: NASA has prepared a draft protocol for the testing and evaluation of samples that may be returned from Mars by future missions in its Mars exploration program. This protocol is designed to provide a model method whereby such samples can be tested for possible biohazards that could be present if life exists on Mars. The protocol has been prepared as a draft to guide the development of both a final protocol to accomplish biohazard and life-detection testing, and to aid in the eventual design of the facility or facilities that will be required to accomplish that testing. Public comment on this draft protocol is sought to provide for refinement of the draft and to provide information for future NASA planning efforts.

A Mars sample return mission is not currently scheduled or funded by NASA, but is being considered as one option in planning future pathways for the exploration of Mars. The draft protocol is a pre-decisional document with respect to planning for a future sample return mission.

This notice informs the public of the availability of the draft protocol for electronic distribution, and solicits public comment.

During the comment period, an electronic version (.pdf) of the NASA Conference Publication, ''A Draft Test Protocol for Detecting Possible Biohazards in Martian Samples Returned to Earth,'' NASA/CP–2002–211842, is available via internet at *http://spacescience.nasa.gov/admin/pubs/marssamples/index.htm*, and a limited number of print copies (one per addressee until the supply is exhausted) is available by writing to the address below.

DATES: Interested parties are invited to submit comments on this document in writing on or before November 28, 2003, to assure full consideration during future planning for Mars exploration missions involving surface or subsurface sample return missions.

ADDRESSES: Written comments should be addressed to Dr. John D. Rummel, NASA Headquarters, Code S, Washington, DC 20546–0001. Comments may also be sent by electronic mail to: *marssamples@hq.nasa.gov*.

FOR FURTHER INFORMATION CONTACT: Dr. John D. Rummel, Code S, NASA Headquarters, Washington, DC 20546–0001; 202–358–0702; electronic mail: *marssamples@hq.nasa.gov*.

John D. Rummel,

Planetary Protection Officer.

[FR Doc. 03–19287 Filed 7–29–03; 8:45 am]

BILLING CODE 7510–01–U

NATIONAL SCIENCE FOUNDATION

Notice of Plan for Collection of Meteorites Issued Under the Antarctic Conservation Act of 1978, as Amended

AGENCY: National Science Foundation.

ACTION: Notice of availability of a plan for collection of meteorites; invitation for comments.

SUMMARY: On March 31, 2003, the National Science Foundation (NSF) issued a final rule that authorized the collection of meteorites in Antarctica for scientific purposes only. These regulations implement Article 7 of the

Protocol on Environmental Protection to the Antarctic Treaty and are issued pursuant to Section 6 of the Antarctic Conservation Act, as amended by the Antarctic Science, Tourism and Conservation Act of 1996. The regulations require appropriate collection, handling, and curation of Antarctic meteorites to preserve their scientific value. Antarctic expeditions planning to collect meteorites in Antarctica are required to submit their plans for the collection, handling, and curation of the meteorites to the National Science Foundation. NSF is providing notice of availability of a meteorite collection plan and inviting comments on the plan.

FOR FURTHER INFORMATION CONTACT: Nadene G. Kennedy, Permit Office, Office of Polar Programs, Rm. 755, National Science Foundation, 4201 Wilson Boulevard, Arlington, VA 22230.

SUPPLEMENTARY INFORMATION: A meteorite collection plan has been received from Dr. Ralph Harvey of Case Western Reserve University. Interested parties are invited to submit written data, comments, or views with respect to this plan by August 14, 2003. This plan may be inspected by interested parties at the Permit Office, address listed above.

Nadene G. Kennedy,

Permit Officer,

[FR Doc. 03–19349 Filed 7–29–03; 8:45 am]

BILLING CODE 7555–01–M

NUCLEAR REGULATORY COMMISSION

Sunshine Act Meeting

DATE: Weeks of July 28, August 4, 11, 18, 25, September 1, 2003.

PLACE: Commissioners' Conference Room, 11555 Rockville Pike, Rockville, Maryland.

STATUS: Public and Closed.

MATTERS TO BE CONSIDERED:

Week of July 28, 2003

There are no meetings scheduled for the Week of July 28, 2003.

Week of August 4, 2003—Tentative

There are no meetings scheduled for the Week of August 4, 2003.

Week of August 11, 2003—Tentative

There are no meetings scheduled for the Week of August 11, 2003.

Week of August 18, 2003—Tentative

There are no meetings scheduled for the Week of August 18, 2003.

Week of August 25, 2003—Tentative

Wednesday, August 27, 2003

9:30 a.m. Briefing on License Renewal Program, Power Uprate Activities, and High Priority Activities (Public Meeting) (Contact: Ho Nieh, 301–415–1721).

This meeting will be webcast live at the Web address—*http://www.nrc.gov*

Week of September 1, 2003—Tentative

There are no meetings scheduled for the Week of September 1, 2003.

The schedule for Commission meetings is subject to change on short notice. To verify the status of meetings call (recording)—(301) 415–1292. Contact person for more information: David Louis Gamberoni (301) 415–1651.

The NRC Commission Meeting Schedule can be found on the Internet at: *http://www.nrc.gov/what-we-do/policy-making/schedule.html.*

This notice is distributed by mail to several hundred subscribers; if you no longer wish to receive it, or would like to be added to the distribution, please contact the Office of the Secretary, Washington, DC 20555 (301–415–1969). In addition, distribution of this meeting notice over the Internet system is available. If you are interested in receiving this Commission meeting schedule electronically, please send an electronic message to *dkw@nrc.gov.*

Dated: July 24, 2003.

D.L. Gamberoni,

Technical Coordinator, Office of the Secretary.

[FR Doc. 03–19486 Filed 7–28–03; 10:09 am]

BILLING CODE 7590–01–M

NUCLEAR REGULATORY COMMISSION

State of Wisconsin: Discontinuance of Certain Commission Regulatory Authority Within the State

AGENCY: Nuclear Regulatory Commission.

ACTION: Notice of agreement with the State of Wisconsin.

SUMMARY: On July 1, 2003, Dr. Nils J. Diaz, Chairman of the U.S. Nuclear Regulatory Commission (NRC) signed an Agreement and on July 3, 2003, Governor Jim Doyle of the State of Wisconsin signed the Agreement as authorized by Section 274b of the Atomic Energy Act, as amended (Act). The Agreement provides for the Commission to discontinue its regulatory authority over source, byproduct materials as defined in Section 11e.(1) of the Act and special nuclear materials (in quantities not sufficient to form a critical mass) in the State of Wisconsin, and for Wisconsin to assume the regulatory authority. Under the Agreement, a person in Wisconsin possessing these materials is exempt from certain Commission regulations. The exemptions have been previously published in the **Federal Register** and are codified in the Commission's regulations as 10 CFR part 150. The Agreement is published here as required by Section 274e of the Act.

FOR FURTHER INFORMATION CONTACT: Lloyd A. Bolling, Office of State and Tribal Programs, U.S. Nuclear Regulatory Commission, Washington, DC 20555–0001. Telephone (301) 415–2327 or e-mail *lab@nrc.gov.*

The draft Agreement was published in the **Federal Register** for comment once a week for four consecutive weeks (*see, e.g.* 68 FR 17090, April 8, 2003) as required by the Act. The public comment period ended on May 8, 2003. A total of two comment letters were received and were considered by the NRC staff. After considering the comments, the request for an Agreement by the Governor of Wisconsin, the supporting documentation submitted with the request for an Agreement, and its interactions with the staff of the Wisconsin Department of Health and Family Services, Division of Public Health, the NRC staff completed an assessment of the Wisconsin program. Based on the staff's assessment, the Commission determined on June 30, 2003, that the proposed Wisconsin program for the control of radiation hazards is adequate to protect public health and safety, and that it is compatible with the Commission's program.

The NRC maintains an Agency-wide Documents Access and Management System (ADAMS), which provides text and image files of NRC's public documents. The documents may be accessed through the NRC's Public Electronic Reading Room on the Internet at *http://www.nrc.gov/reading-rm/adams.html.* If you do not have access to ADAMS or if there are problems in accessing the documents located in ADAMS, contact the NRC Public Document Room (PDR) reference staff at 1–800–397–4209, 301–415–4737, or by e-mail to *pdr@nrc.gov.*

Copies of the comment analysis by the NRC staff, the staff assessment, and the Commission's decision are also available for public inspection in the NRC's Public Document Room—ADAMS Accession Numbers: ML031530264 and ML031810191. Copies of these documents may be

viewed at the NRC website at, *http://www.nrc.gov/reading-rm/doc-collections/commission/secys/2003/secy2003–0096/2003–0096scy.html* and, *http://www.nrc.gov/reading-rm/doc-collections/commission/srm/2003/2003–0096srm.html.*

Dated at Rockville, Maryland, this 22nd day of July, 2003.

For the Nuclear Regulatory Commission.

Annette L. Vietti-Cook,

Secretary of the Commission.

Attachment—Agreement Between the United States Nuclear Regulatory Commission and the State of Wisconsin for Discontinuance of Certain Commission Regulatory Authority and Responsibility Within the State Pursuant to Section 274 of the Atomic Energy Act of 1954, as Amended

Whereas, the United States Nuclear Regulatory Commission (hereinafter referred to as the Commission) is authorized under Section 274 of the Atomic Energy Act of 1954, as amended (hereinafter referred to as the Act), to enter into Agreements with the Governor of any State providing for discontinuance of the regulatory authority of the Commission within the State under Chapters 6, 7, and 8, and Section 161 of the Act with respect to byproduct materials as defined in Sections 11e. (1) and (2) of the Act, source materials, and special nuclear materials in quantities not sufficient to form a critical mass; and,

Whereas, the Governor of the State of Wisconsin is authorized under s. 254.335 (1), Wisconsin Statutes, to enter into this Agreement with the Commission; and,

Whereas, the Governor of the State of Wisconsin certified on August 21, 2002, that the State of Wisconsin (hereinafter referred to as the State) has a program for the control of radiation hazards adequate to protect public health and safety with respect to the materials within the State covered by this Agreement, and that the State desires to assume regulatory authority for such materials; and,

Whereas, the Commission found on June 30, 2003 that the program of the State for the regulation of the materials covered by this Agreement is compatible with the Commission's program for the regulation of such materials and is adequate to protect public health and safety; and,

Whereas, the State and the Commission recognize the desirability and importance of cooperation between the Commission and the State in the formulation of standards for protection against hazards of radiation and in assuring that State and Commission programs for protection against hazards of radiation will be coordinated and compatible; and,

Whereas, the Commission and the State recognize the desirability of the reciprocal recognition of licenses, and of the granting of limited exemptions from licensing of those materials subject to this Agreement; and,

Whereas, this Agreement is entered into pursuant to the provisions of the Act: Now, Therefore, It is hereby agreed between the Commission and the Governor of the State, acting on behalf of the State, as follows:

Article I

Subject to the exceptions provided in Articles II, IV, and V, the Commission shall discontinue, as of the effective date of this Agreement, the regulatory authority of the Commission in the State under Chapters 6, 7, and 8, and Section 161 of the Act with respect to the following materials:

A. Byproduct materials as defined in Section 11e. (1) of the Act;

B. Source materials;

C. Special nuclear materials in quantities not sufficient to form a critical mass.

Article II

This Agreement does not provide for discontinuance of any authority and the Commission shall retain authority and responsibility with respect to:

A. The regulation of the construction and operation of any production or utilization facility or any uranium enrichment facility;

B. The regulation of the export from or import into the United States of byproduct, source, or special nuclear material, or of any production or utilization facility;

C. The regulation of the disposal into the ocean or sea of byproduct, source, or special nuclear material wastes as defined in the regulations or orders of the Commission;

D. The regulation of the disposal of such other byproduct, source, or special nuclear material as the Commission from time to time determines by regulation or order should, because of the hazards or potential hazards thereof, not be so disposed without a license from the Commission;

E. The evaluation of radiation safety information on sealed sources or devices containing byproduct, source, or special nuclear materials and the registration of the sealed sources or devices for distribution, as provided for in regulations or orders of the Commission;

F. The regulation of the land disposal of byproduct, source, or special nuclear material waste received from other persons;

G. The extraction or concentration of source material from source material ore and the management and disposal of the resulting byproduct material.

Article III

With the exception of those activities identified in Article II, paragraphs A through D, this Agreement may be amended, upon application by the State and approval by the Commission, to include the additional areas specified in Article II, paragraphs E, F and G, whereby the State can exert regulatory authority and responsibility with respect to those activities and materials.

Article IV

Notwithstanding this Agreement, the Commission may from time to time by rule, regulation, or order, require that the manufacturer, processor, or producer of any equipment, device, commodity, or other product containing source, byproduct, or special nuclear material shall not transfer possession or control of such product except pursuant to a license or an exemption from licensing issued by the Commission.

Article V

This Agreement shall not affect the authority of the Commission under subsection 161b or 161i of the Act to issue rules, regulations, or orders to protect the common defense and security, to protect restricted data, or to guard against the loss or diversion of special nuclear material.

Article VI

The Commission will cooperate with the State and other Agreement States in the formulation of standards and regulatory programs of the State and the Commission for protection against hazards of radiation and to assure that Commission and State programs for protection against hazards of radiation will be coordinated and compatible. The State agrees to cooperate with the Commission and other Agreement States in the formulation of standards and regulatory programs of the State and the Commission for protection against hazards of radiation and will assure that the State's program will continue to be compatible with the program of the Commission for the regulation of materials covered by this Agreement.

The State and the Commission agree to keep each other informed of proposed changes in their respective rules and regulations, and to provide each other the opportunity for early and substantive contribution to the proposed changes.

The State and the Commission agree to keep each other informed of events, accidents, and licensee performance that may have generic implication or otherwise be of regulatory interest.

Article VII

The Commission and the State agree that it is desirable to provide reciprocal recognition of licenses for the materials listed in Article I licensed by the other party or by any other Agreement state. Accordingly, the Commission and the State agree to develop appropriate rules, regulations, and procedures by which such reciprocity will be accorded.

Article VIII

The Commission, upon its own initiative after reasonable notice and opportunity for hearing to the State, or upon request of the Governor of the State, may terminate or suspend all or part of this Agreement and reassert the licensing and regulatory authority vested in it under the Act if the Commission finds that (1) such termination or suspension is required to protect public health and safety, or (2) the State has not complied with one or more of the requirements of Section 274 of the Act. The Commission may also, pursuant to Section 274j of the Act, temporarily suspend all or part of this Agreement if, in the judgement of the Commission, an emergency situation exists requiring immediate action to protect public health and safety and the State has failed to take necessary steps. The Commission shall periodically review this Agreement and actions taken by the State under this Agreement to ensure compliance with Section 274 of the Act which requires a State program to be adequate to protect public health and safety with respect to the

materials covered by the Agreement and to be compatible with the Commission's program.

Article IX

This Agreement shall become effective on August 11, 2003, and shall remain in effect unless and until such time as it is terminated pursuant to Article VIII.

Dated at Rockville, Maryland, in triplicate, this 1st day of July, 2003.

For the United States Nuclear Regulatory Commission.

Nils J. Diaz,
Chairman.

Dated at Madison, Wisconsin, in triplicate, this 3rd day of July, 2003.

For the State of Wisconsin.

Jim Doyle,
Governor.

[FR Doc. 03–19319 Filed 7–29–03; 8:45 am]

BILLING CODE 7590–01–P

SECURITIES AND EXCHANGE COMMISSION

Proposed Collection; Comment Request

Upon Written Request; Copies Available From: Securities and Exchange Commission, Office of Filings and Information Services, Washington, DC 20549.

Extension:
Form S–2, OMB Control No. 3235–0072 and SEC File No. 270–060.

Notice is hereby given that pursuant to the Paperwork Reduction Act of 1995 (44 U.S.C. 3501 *et seq.*) the Securities and Exchange Commission (''Commission'') is soliciting comments on the collection of information summarized below. The Commission plans to submit this existing collection of information to the Office of Management and Budget for approval.

Form S–2 (OMB Control No. 3235–0072; SEC File No. 270–060) is used by certain issuers to register securities under the Securities Act of 1933. The Form S–2 provides investors with the necessary information to make investment decisions regarding securities offered to the public. The likely respondents will be public companies. The information collected must be filed with the Commission and is publicly available. Form S–2 takes approximately 470 burden hours to prepare and is filed by 101 respondents for a total of 47,470 burden hours. It is estimated that 25% of the 47,470 total burden hours (11,868 hours) is prepared by the company. The remaining 75% of the burden hours is attributed to outside cost.

Written comments are invited on: (a) Whether this proposed collection of information is necessary for the performance of the functions of the agency, including whether the information will have practical utility; (b) the accuracy of the agency's estimate of the burden of the collection of information; (c) ways to enhance the quality, utility, and clarity of the information collected; and (d) ways to minimize the burden of the collection of information on respondents, including through the use of automated collection techniques or other forms of information technology. Consideration will be given to comments and suggestions submitted in writing within 60 days of this publication.

Please direct your written comment to Kenneth A. Fogash, Acting Associate Executive Director/CIO, Office of Information Technology, Securities and Exchange Commission, 450 Fifth Street NW., Washington, DC 20549.

Dated: July 22, 2003.

J. Lynn Taylor,

Assistant Secretary.

[FR Doc. 03–19331 Filed 7–29–03; 8:45 am]

BILLING CODE 8010–01–P

SECURITIES AND EXCHANGE COMMISSION

[Release No. 35–27702]

Filings Under the Public Utility Holding Company Act of 1935, As Amended (''Act'')

July 24, 2003.

Notice is hereby given that the following filing(s) has/have been made with the Commission pursuant to provisions of the Act and rules promulgated under the Act. All interested persons are referred to the application(s) and/or declaration(s) for complete statements of the proposed transaction(s) summarized below. The application(s) and/or declaration(s) and any amendment(s) is/are available for public inspection through the Commission's Branch of Public Reference.

Interested persons wishing to comment or request a hearing on the application(s) and/or declaration(s) should submit their views in writing by August 18, 2003, to the Secretary, Securities and Exchange Commission, Washington, DC 20549–0609, and serve a copy on the relevant applicant(s) and/or declarant(s) at the address(es) specified below. Proof of service (by affidavit or, in the case of an attorney at law, by certificate) should be filed with the request. Any request for hearing should identify specifically the issues of facts or law that are disputed. A person who so requests will be notified of any hearing, if ordered, and will receive a copy of any notice or order issued in the matter. After August 18, 2003, the application(s) and/or declaration(s), as filed or as amended, may be granted and/or permitted to become effective.

Entergy Mississippi, Inc. (70–9757)

Entergy Mississippi, Inc. (''EM''), 308 Pearl Street, Jackson, Mississippi 39201, an electric utility subsidiary of Entergy Corporation, a public utility holding company registered under the Act, has filed a post effective amendment to an application-declaration previously filed under sections 6(a), 7, 9(a), 10, and 12(d) of the Act and rules 44 and 53 under the Act.

By order dated December 26, 2000 (HCAR No. 27317) (''2000 Order''), EM was authorized, among other things, to issue and sell up to $540 million of EM's first mortgage bonds (''Bonds'') and/or EM's debentures (''Debentures'') through December 31, 2003 (''Authorization Period'') with fees and commissions associated with the sale of Bonds or Debentures not to exceed 2% of the principle amount to be sold. By order dated October, 2, 2002 (HCAR No. 27527) (''2002 Order''), EM was authorized to increase the amount of fees and commissions associated with the sale of Bonds or Debentures to 3.25% of the principle amount to be sold.

EM now proposes to increase the aggregate limit of Bonds and/or Debentures it may issue to $740 million through the Authorization Period under the same terms and conditions as those granted in the 2000 Order and the 2002 Order. EM states that the use of proceeds from the additional issuance will be used to prefund certain series of near-term maturing debt and refund certain series of longer-term maturing debt early.

For the Commission by the Division of Investment Management, pursuant to delegated authority.

J. Lynn Taylor,

Assistant Secretary.

[FR Doc. 03–19328 Filed 7–29–03; 8:45 am]

BILLING CODE 8010–01–P

SECURITIES AND EXCHANGE COMMISSION

[Release No. 34–48219; File No. SR–Amex–2003–51]

Self-Regulatory Organizations; Notice of Filing and Immediate Effectiveness of Proposed Rule Change by the American Stock Exchange LLC Relating to Option Fee Reductions

July 23, 2003.

Pursuant to Section 19(b)(1) of the Securities Exchange Act of 1934 (''Act'')[1] and Rule 19b–4 thereunder,[2] notice is hereby given that on May 29, 2003, the American Stock Exchange LLC (''Amex'' or ''Exchange'') submitted to the Securities and Exchange Commission (''Commission'') the proposed rule change as described in Items I, II, and III below, which Items have been prepared by the Exchange. On July 3, 2003, the Exchange filed Amendment No. 1 to the proposed rule change.[3] The Commission is publishing this notice to solicit comments on the proposed rule change from interested persons.

I. Self-Regulatory Organization's Statement of the Terms of Substance of the Proposed Rule Change

The Exchange proposes to modify its options fee schedule by eliminating the options fee for specialist and registered options traders (''ROTs'') transactions in their allocated options resulting from broker-dealer Auto-Ex trades. In addition, this proposal also seeks an increase of $0.06 per option trade in the current options fee rebate for QQQ option trades by specialists, ROTs and non-member broker-dealers in connection with accommodation trades as well as trades that are part of reversals and conversions, dividend spreads, box spreads and butterfly spreads. The text of the proposed rule change is available at the Amex and at the Commission.

II. Self-Regulatory Organization's Statement of the Purpose of, and Statutory Basis for, the Proposed Rule Change

In its filing with the Commission, the Amex included statements concerning the purpose of and basis for the proposed rule change and discussed any comments it received on the proposed rule change. The text of these statements may be examined at the places specified in Item IV below. The Amex has prepared summaries, set forth in sections A, B, and C below, of the most significant aspects of such statements.

A. Self-Regulatory Organization's Statement of the Purpose of, and the Statutory Basis for, the Proposed Rule Change

1. Purpose

Specialist Fee Rebate. The Amex proposes to eliminate options fees for specialist and ROT transactions in their allocated options resulting from broker-dealer trades, including trades of away market makers,[4] in connection with the Exchange's Broker-Dealer Auto-Ex Program.[5] Specialists and ROTs are currently subject to fees in connection with executing Broker-Dealer Auto-Ex orders of $0.36 for equity options, $0.36 plus any applicable licensing fee for ETF options and $0.31 plus any applicable licensing fee for index options.[6]

The Exchange recently increased a number of member fees to better align its fees with the actual cost of delivering services as well as to reduce subsidies of these services. As a result, specialists have seen an increase in their fees for transactions executed at the Amex. This change to the Exchange's option fee structure better reflects the cost to the Exchange of operating the options floor. However, consistent with assuring the continued economic vitality of the Exchange, the Exchange believes the fee specialists and ROTs pay for executing broker-dealer orders in connection with the Broker-Dealer Auto-Ex Program should be eliminated. The option fees eliminated for specialists and ROTs executing Broker-Dealer Auto-Ex orders consist of the options transaction fee, the options comparison fee, the options floor brokerage fee and the options licensing fee (if applicable).[7] The elimination of these fees amounts to $0.36 for equity options, $0.36 plus any applicable options licensing fee for ETF options and $0.31 plus any applicable options licensing fee for index options. In this manner, the Exchange believes that it can better contribute to the continued success of the options floor and the Broker-Dealer Auto-Ex Program. The Exchange further believes that the proposal will provide specialists and ROTs with an incentive to attract away market maker order flow to the Exchange.

Options Fee Rebate Increase for QQQ Options. The Commission in June 2002 approved an Exchange proposal providing for an options fee rebate for accommodation trades[8] as well as trades entered into as part of a reversal and conversion,[9] dividend spread[10] and box spread[11] so that the increase in fees of $0.12 per contract side were reimbursed.[12] The Exchange in this proposal seeks to increase for QQQ option trades the rebate from $0.12 per contract side to $0.18 per contract side as well as to include the ''butterfly spread''[13] as an additional strategy subject to the rebate.

The Exchange believes that in connection with the trading of QQQ options, the increase in the options fee rebate should encourage specialists and

[1] 15 U.S.C. 78s(b)(1).

[2] 17 CFR 240.19b–4.

[3] The Exchange submitted a new Form 19b–4, which replaces and supersedes the original filing in its entirety.

[4] An ''away market maker'' is a member of another national securities exchange registered as a market maker in an options class(es).

[5] On June 21, 2002, the Exchange filed with the Commission a proposal to permit broker-dealer orders to be executed through Auto-Ex. *See* Securities Exchange Act Release No. 46479 (September 10, 2002), 67 FR 58654 (September 17, 2002).

[6] Broker-dealer orders executed through Auto-Ex are subject to a $0.50 options transaction fee as well as an options comparison fee and options floor brokerage fee so that the total fee for broker-dealer Auto-Ex trades designated as broker-dealer or firm is $0.57. *See* Securities Exchange Act Release No. 47216 (January 17, 2003), 68 FR 5059 (January 31, 2003).

[7] The options marketing fee of $0.40 per contract on specialist and ROT transactions is only imposed on transactions involving customer orders from firms accepting payment for order flow. Accordingly, the options marketing fee does not apply to transactions of specialists and ROTs in connection with executing Broker-Dealer Auto-Ex orders. *See* Securities Exchange Act Release No. 48053 (June 17, 2003), 68 FR 37880 (June 25, 2003).

[8] An ''accommodation'' or ''cabinet'' trade refers to trades in listed options on the Exchange that are worthless and not actively traded. The Exchange's procedure for engaging in accommodation or cabinet trades is set forth in Amex Rule 959.

[9] A ''conversion'' is a strategy in which a long put and a short call with the same strike price and expiration date are combined with long underlying stock to lock in a nearly riskless profit. A ''reversal'' is a strategy in which a short put and long call with the same strike price and expiration date are combined with short stock to lock in a nearly riskless profit.

[10] A ''dividend spread'' is any trade done within a defined time frame in which a dividend arbitrage can be achieved between any two deep-in-the-money options.

[11] A ''box spread'' is a spread strategy that involves a long call and short put at one strike price as well as a short call and long put at another strike price. This is a synthetic long stock position at one strike price and a synthetic short stock position at another strike price.

[12] *See* Securities Exchange Act Release No. 46026 (June 4, 2002), 67 FR 40034 (June 11, 2002). Pursuant to this order, the Exchange began providing the options fee rebate in December 2001. *See also* Securities Exchange Act Release No. 45783 (April 18, 2002), 67 FR 20851 (April 26, 2002).

[13] A ''butterfly spread'' is an option strategy that has both limited risk and limited profit potential, constructed by combining a bull spread and a bear spread having the same expiration date for all options. Three strike prices are involved, with the lower two strikes being utilized in the bull spread and the higher two strikes in the bear spread. The strategy may be established with either puts or calls.

ROTs to provide liquidity by keeping fees low for these special types of trades and option strategies. In addition, the Exchange believes that the increase in the options fee rebate will help to attract greater order flow to the floor of the Exchange by making our fee structure more competitive with the other options exchanges.

In order to collect the options fee rebate, within thirty calendar days of the particular transaction date, a Fee Reimbursement Form must be completed and submitted to the Exchange. Upon acceptance, the Exchange will deliver to that member's clearing firm a reimbursement check in the amount of the transaction, clearance and brokerage fees (a total of $0.18) charged on QQQ option contracts executed pursuant to an accommodation trade or one of the strategies described above.

2. Basis

The Exchange believes the proposed rule change is consistent with Section 6(b) of the Act,[14] in general, and with Section 6(b)(4) [15] of the Act in particular, in that it provides for the equitable allocation of reasonable dues, fees, and other charges among its members.

B. Self-Regulatory Organization's Statement on Burden on Competition

The Exchange does not believe that the proposed rule change, as amended, will impose any burden on competition.

C. Self-Regulatory Organization's Statement on Comments on the Proposed Rule Change Received From Members, Participants or Others

No written comments were solicited or received with respect to the proposed rule change.

III. Date of Effectiveness of the Proposed Rule Change and Timing for Commission Action

The foregoing rule change has become effective immediately because it has been designated as a fee change pursuant to Section 19(b)(3)(A)(ii) of the Act [16] and Rule 19b–4(f)(2) [17] thereunder. At any time within 60 days of the filing of Amendment No. 1 to the proposed rule change, the Commission may summarily abrogate such rule change if it appears to the Commission that such action is necessary or appropriate in the public interest, for the protection of investors, or otherwise in the furtherance of the purposes of the Act.

IV. Solicitation of Comments

Interested persons are invited to submit written data, views and arguments concerning the foregoing, including whether the proposal, as amended, is consistent with the Act. Persons making written submissions should file six copies thereof with the Secretary, Securities and Exchange Commission, 450 Fifth Street, NW., Washington, DC 20549. Copies of the submission, all subsequent amendments, all written statements with respect to the proposed rule change that are filed with the Commission, and all written communications relating to the proposed rule change between the Commission and any person, other than those that may be withheld from the public in accordance with the provisions of 5 U.S.C. 552, will be available for inspection and copying in the Commission's Public Reference Room. Copies of such filing will also be available for inspection and copying at the principal office of the Amex. All submissions should refer to the File No. SR–Amex–2003–51 and should be submitted by August 20, 2003.

For the Commission by the Division of Market Regulation, pursuant to delegated authority.[18]

J. Lynn Taylor,

Assistant Secretary.

[FR Doc. 03–19290 Filed 7–29–03; 8:45 am]

BILLING CODE 8010–01–P

[14] *See* 15 U.S.C. 78f(b).

[15] *See* 15 U.S.C. 78f(b)(4).

[16] 15 U.S.C. 78(s)(b)(3)(A)(ii).

[17] 17 CFR 240.19b–4(f)(2).

[18] 17 CFR 200.30–3(a)(12).

SECURITIES AND EXCHANGE COMMISSION

[Release No. 34–48221; File No. SR–DTC–2001–13]

Self-Regulatory Organizations; The Depository Trust Company; Notice of Filing of a Proposed Rule Change Amending The Depository Trust Company's Policy Statement on the Admission of Non-U.S. Entities as Direct Depository Participants

July 23, 2003.

Pursuant to Section 19(b)(1) of the Securities Exchange Act of 1934 (''Act''),[1] notice is hereby given that on July 23, 2001, The Depository Trust Company (''DTC'') filed with the Securities and Exchange Commission (''Commission'') the proposed rule change as described in Items I, II, and III below, which items have been prepared primarily by DTC. The Commission is publishing this notice to solicit comments on the proposed rule change from interested persons.

I. Self-Regulatory Organization's Statement of the Terms of Substance of the Proposed Rule Change

DTC is proposing to amend its Policy Statement on the Admission of Non-U.S. Entities as Direct Depository Participants (''Policy Statement'') to eliminate the requirement that the foreign entity deposit with or pledge to DTC special collateral having a value (after the imposition of specified haircuts) equal to 50% of the entity's net debit cap (''special collateral requirement'').[2]

II. Self-Regulatory Organization's Statement of the Purpose of, and Statutory Basis for, the Proposed Rule Change

In its filing with the Commission, DTC included statements concerning the purpose of and basis for the proposed rule change and discussed any comments it received on the proposed rule change. The text of these statements may be examined at the place specified in Item IV below. DTC has prepared summaries, set forth in sections (A), (B), and (C) below, of the most significant aspects of such statements.[3]

(A) Self-Regulatory Organization's Statement of the Purpose of, and Statutory Basis for, the Proposed Rule Change

The Policy Statement was adopted by DTC to establish admissions criteria that would permit a well-qualified foreign entity to obtain direct access to DTC's services without requiring the foreign entity to obtain financial guarantees.[4] The Policy Statement contains a number of requirements that are designed to address the unique risks posed by the admission of foreign entities. Under the proposed rule change, all of these requirements, except for the special collateral requirement, would be retained.

The special collateral requirement provides that except for U.S. Treasury

[1] 15 U.S.C. 78s(b)(1).

[2] A copy of the text of DTC's proposed rule change and attachment is available at the Commission's Public Reference Room or through DTC.

[3] The Commission has modified parts of these statements.

[4] DTC's Policy Statement on its admission criteria for non-U.S. entities was first temporarily approved on May 9, 1997. Securities Exchange Act Release No. 38600 (May 9, 1997), 62 FR 27086. Since then, the non-U.S. admission criteria have been temporarily approved several times. Securities Exchange Act Release Nos. 40064 (June 3, 1998), 63 FR 31818; 41466 (May 28, 1999), 64 FR 30077; 42865 (May 30, 2000), 65 FR 36188; and 44470 (June 22, 2001), 66 FR 34972.

securities, securities posted as special collateral receives a haircut of 50% of their market value. Most importantly, the foreign entity does not receive credit for this special collateral in DTC's collateral monitor; that is, any net debit or collateral needs have to be supported by the value of other, non-special collateral (including securities received by the participant reflecting DTC's customary haircuts).

DTC's collateral monitor systematically prevents a participant from accruing a net debit that exceeds the value of the collateral in its account by blocking any transaction that would have that effect. For this purpose, collateral includes: (1) The participant's deposit to the participants fund, (2) the value of securities in the participant's account that it has designated as collateral, and (3) the value of securities that are the subject of deliveries from other participants. The collateral value attributed to securities is equal to their market value minus a ''haircut'' determined by DTC. DTC believes that the collateral monitor and its other risk management controls and procedures applicable to all participants, together with the other requirements of the Policy Statement, adequately limit DTC's exposure in the event of the failure to settle and insolvency of a foreign participant, without the need for the special collateral requirement.

DTC believes that the proposed rule change is consistent with the requirements of the Act and the rules and regulations thereunder applicable to DTC since the proposed rule change will eliminate an unnecessary barrier to admission as participants by well-qualified foreign entities.

(B) Self-Regulatory Organization's Statement on Burden on Competition

DTC perceives no adverse impact on competition by reason of the proposed rule change.

(C) Self-Regulatory Organization's Statement on Comments on the Proposed Rule Change Received From Members, Participants, or Others

DTC has not sought or received comments on the proposed rule change.

III. Date of Effectiveness of the Proposed Rule Change and Timing for Commission Action

Within thirty-five days of the date of publication of this notice in the **Federal Register** or within such longer period (i) as the Commission may designate up to ninety days of such date if it finds such longer period to be appropriate and publishes its reasons for so finding or (ii) as to which the self-regulatory organization consents, the Commission will:

(A) By order approve such proposed rule change or

(B) Institute proceedings to determine whether the proposed rule change should be disapproved.

IV. Solicitation of Comments

Interested persons are invited to submit written data, views, and arguments concerning the foregoing, including whether the proposed rule change is consistent with the Act. Persons making written submissions should file six copies thereof with the Secretary, Securities and Exchange Commission, 450 Fifth Street NW., Washington, DC 20549–0609. Comments may also be submitted electronically at the following e-mail address: *rule-comments@sec.gov.* All comment letters should refer to File No. SR–DTC–2001–13. This file number should be included on the subject line if e-mail is used. To help us process and review comments more efficiently, comments should be sent in hardcopy or by e-mail but not by both methods. Copies of the submission, all subsequent amendments, all written statements with respect to the proposed rule change that are filed with the Commission, and all written communications relating to the proposed rule change between the Commission and any person, other than those that may be withheld from the public in accordance with the provisions of 5 U.S.C. 552, will be available for inspection and copying in the Commission's Public Reference Section, 450 Fifth Street NW., Washington, DC 20549. Copies of such filing will also be available for inspection and copying at the principal office of DTC. All submissions should refer to the File No. SR–DTC–2001–13 and should be submitted by August 20 2003.

For the Commission by the Division of Market Regulation, pursuant to delegated authority.[5]

J. Lynn Taylor,

Assistant Secretary.

[FR Doc. 03–19330 Filed 7–29–03; 8:45 am]

BILLING CODE 8010–01–P

[5] 17 CFR 200.30–3(a)(12).

SECURITIES AND EXCHANGE COMMISSION

[Release No. 34–48220; File No. SR–GSCC–2002–03]

Self-Regulatory Organizations; Government Securities Clearing Corporation; Notice of Filing of Proposed Rule Change Relating to the Revision of the Comparison-Only Membership Application Approval Process

July 23, 2003.

Pursuant to Section 19(b)(1) of the Securities Exchange Act of 1934 (''Act''),[1] notice is hereby given that on May 22, 2002, Government Securities Clearing Corporation (''GSCC'')[2] filed with the Securities and Exchange Commission (''Commission'') and on June 25, 2002, amended the proposed rule change as described in Items I, II, and III below, which items have been prepared primarily by GSCC. The Commission is publishing this notice to solicit comments on the proposed rule change from interested parties.

I. Self-Regulatory Organization's Statement of the Terms of Substance of the Proposed Rule Change

The proposed rule change would allow GSCC's management to approve or reject comparison-only membership applications.

II. Self-Regulatory Organization's Statement of the Purpose of, and Statutory Basis for, the Proposed Rule Change

In its filing with the Commission, GSCC included statements concerning the purpose of and basis for the proposed rule change and discussed any comments it received on the proposed rule change. The text of these statements may be examined at the places specified in Item IV below. GSCC has prepared summaries, set forth in sections (A), (B),

[1] 15 U.S.C. 78s(b)(1).

[2] On January 1, 2003, MBS Clearing Corporation (''MBSCC'') was merged into the Government Securities Clearing Corporation (''GSCC'') under New York law, and GSCC was renamed the Fixed Income Clearing Corporation (''FICC''). The functions previously performed by GSCC are now performed by the Government Securities Division (''GSD'') of FICC, and the functions previously performed by MBSCC are now performed by the Mortgage-Backed Securities Division (''MBSD'') of FICC. The GSD succeeded to the GSCC proposed rule change upon the merger of MBSCC and GSCC. To avoid confusion and maintain consistency with the Notice, in this Order, we will continue to refer to GSCC instead of the GSD of FICC. Securities Exchange Act Release No. 47015 (December 17, 2002), 67 FR 78531 [File Nos. SR–GSCC–2002–09 and SR–MBSCC–2002–01].

and (C) below, of the most significant aspects of these statements.[3]

(A) Self-Regulatory Organization's Statement of the Purpose of, and Statutory Basis for, the Proposed Rule Change

In the beginning of 2002, GSCC implemented various rule changes that effectuated GSCC's new governance structure resulting from the integration of GSCC with The Depository Trust & Clearing Corporation.[4] As part of the new structure, the newly formed GSCC/MBSCC Membership and Risk Management Committee (''Committee'') was given the authority to approve or reject comparison-only and netting membership applications. Upon further review, GSCC has determined that it would be more appropriate for GSCC management to approve or reject applications for comparison-only membership.[5]

The proposed rule change will permit GSCC to effectively balance the interests involved in the membership approval process, including the need for a prudent review of membership applicants as well as the need to admit members on a timely basis. This goal is most appropriately met by having management approve GSCC comparison-only membership applicants.[6] GSCC believes that, given the difference in the level of risk posed by the two types of GSCC membership applicants, only applications to become members of GSCC's netting service should require the Committee's review and approval.[7]

GSCC will activate membership for qualified applicants upon completion of the requisite financial and/or other operational reviews and upon receipt of all membership documentation as is provided in GSCC's rules. In addition, management will provide the Committee with a listing of comparison-only firms being considered for approval by management prior to activating any firm's comparison-only membership.

Consistent with these changes and in order to clarify relevant terms for members, GSCC is also expanding the current definition of ''Corporation'' in its Rules. Going forward, ''Corporation'' will also mean ''Management,'' unless otherwise indicated, and these terms will be used interchangeably.

The proposed rule change is consistent with the requirements of Section 17A of the Act[8] and the rules and regulations thereunder applicable to GSCC because it involves a change in GSCC's governance structure that will streamline GSCC's membership application process. In doing so, it will allow GSCC to prudently and more appropriately assess the risk posed by a particular applicant and will allow GSCC to review and approve applicants in a timelier manner.

(B) Self-Regulatory Organization's Statement on Burden on Competition

GSCC does not believe that the proposed rule change will have any impact or impose any burden on competition.

(C) Self-Regulatory Organization's Statement on Comments on the Proposed Rule Change Received From Members, Participants or Others

Written comments relating to the proposed rule change have not yet been solicited or received. GSCC will notify the Commission of any written comments received by GSCC.

III. Date of Effectiveness of the Proposed Rule Change and Timing for Commission Action

Within thirty-five days of the date of publication of this notice in the **Federal Register** or within such longer period (i) As the Commission may designate up to ninety days of such date if it finds such longer period to be appropriate and publishes its reasons for so finding or (ii) as to which the self-regulatory organization consents, the Commission will:

(A) By order approve such proposed rule change or

(B) Institute proceedings to determine whether the proposed rule change should be disapproved.

IV. Solicitation of Comments

Interested persons are invited to submit written data, views, and arguments concerning the foregoing, including whether the proposed rule change is consistent with the Act. Persons making written submissions should file six copies thereof with the Secretary, Securities and Exchange Commission, 450 Fifth Street, NW., Washington, DC 20549–0609. Comments may also be submitted electronically at the following e-mail address: *rule-comments@sec.gov.* All comment letters should refer to File No. SR–GSCC–2002–03. This file number should be included on the subject line if e-mail is used. To help us process and review comments more efficiently, comments should be sent in hardcopy or by e-mail but not by both methods. Copies of the submission, all subsequent amendments, all written statements with respect to the proposed rule change that are filed with the Commission, and all written communications relating to the proposed rule change between the Commission and any person, other than those that may be withheld from the public in accordance with the provisions of 5 U.S.C. 552, will be available for inspection and copying in the Commission's Public Reference Section, 450 Fifth Street, NW., Washington, DC 20549. Copies of such filing also will be available for inspection and copying at the principal office of GSCC. All submissions should refer to File No. SR–GSCC–2002–03 and should be submitted by August 20, 2003.

For the Commission by the Division of Market Regulation, pursuant to delegated authority.[9]

J. Lynn Taylor,

Assistant Secretary.

[FR Doc. 03–19329 Filed 7–29–03; 8:45 am]

BILLING CODE 8010–01–P

[3] The Commission has modified the text of the summaries prepared by GSCC.

[4] Securities Exchange Act Release No. 45378 (January 31, 2002), 67 FR 6064 [File No. SR–GSCC–2001–13].

[5] The Committee voted to delegate the authority to approve comparison-only membership applicants to management during its March 7, 2002 meeting. The purpose of this rule filing is to allow GSCC's to implement this change. The term ''comparison-only member'' means a member that is a member only of the comparison system.

[6] This is consistent with the process currently employed by the National Securities Clearing Corporation (''NSCC''). The President of NSCC, or a Managing Director of NSCC Risk Management, may authorize a Vice President of NSCC Risk Management to approve non-guaranteed service applicants that meet membership requirements. The NSCC Membership and Risk Management Committee receives a list showing the name of each approved non-guaranteed service member.

[7] GSCC's netting service provides for GSCC's guarantee of settlement. GSCC's comparison-only service does not do so.

[8] 15 U.S.C. 78q–1.

[9] 17 CFR 200.30–3(a)(12).

SECURITIES AND EXCHANGE COMMISSION

[Release No. 34–48215; File No. SR–NASD–2003–75]

Self-Regulatory Organizations; Notice of Filing and Immediate Effectiveness of Proposed Rule Change and Amendment Nos. 1 and 2 Thereto by the National Association of Securities Dealers, Inc. Relating to Requests for Underwriting Activity Reports

July 23, 2003.

Pursuant to Section 19(b)(1) of the Securities Exchange Act of 1934 (''Act''),[1] and Rule 19b–4 thereunder,[2]

[1] 15 U.S.C. 78s(b)(1).

[2] 17 CFR 240.19b–4.

notice is hereby given that on April 29, 2003, the National Association of Securities Dealers, Inc. (''NASD'') submitted to the Securities and Exchange Commission (''SEC'' or ''Commission'') the proposed rule change as described in Items I, II and III below, which Items have been prepared by NASD. On May 28, 2003, NASD submitted Amendment No. 1 to the proposed rule change.[3] On July 9, 2003, NASD submitted Amendment No. 2 to the proposed rule change.[4] NASD has designated the proposed rule change as concerned solely with administration of the self regulatory organization under Section 19(b)(3)(A)(iii) of the Act[5] and Rule 19b–4(f)(3) thereunder,[6] which renders the proposed rule change effective upon filing with the Commission.[7] The Commission is publishing this notice to solicit comments on the proposed rule change from interested persons.

I. Self-Regulatory Organization's Statement of the Terms of Substance of the Proposed Rule Change

NASD is proposing to amend NASD Rules to require members to submit requests for Underwriting Activity Reports (''UARs'') to the Market Regulation Department rather than the Corporate Finance Department. NASD is also proposing to amend NASD Rule 0120 to change the definition of ''NASD.'' The text of the proposed rule change is set forth below. Proposed new language is in *italics*; proposed deletions are in [brackets].

* * * * *

0120. Definitions

When used in these Rules, unless the context otherwise requires:

(a) through (i) No Change.

(j) ''NASD''

The term ''NASD'' means, *collectively, NASD Inc., NASD Regulation, Nasdaq, and NASD Dispute Resolution* [NASD, Inc].

(k) through (q) No Change.

* * * * *

2710. Corporate Financing Rule—Underwriting Terms and Arrangements

(a) No Change.

(b) Filing Requirements

(1) General

No member or person associated with a member shall participate in any manner in any public offering of securities subject to this Rule, Rule 2720 or Rule 2810 unless documents and information as specified herein relating to the offering have been filed with and reviewed by *NASD* [the Association].

(2) Means of Filing

Documents or information required by this Rule to be filed with NASD [the Association][*] shall be considered to be filed only upon receipt by its Corporate Financing Department.*

(3) Confidential Treatment

NASD [The Association] shall accord confidential treatment to all documents and information filed pursuant to this Rule and shall utilize such documents and information solely for the purpose of review to determine compliance with the provisions of applicable *NASD* [Association] Rules or for other regulatory purposes deemed appropriate by *NASD* [the Association].

(4) Requirement for Filing

(A) Unless filed by the issuer, the managing underwriter, or another member, a member that anticipates participating in a public offering of securities subject to this Rule shall file with *NASD* [the Association] the documents and information with respect to the offering specified in subparagraphs (5) and (6) below no later than one business day after the filing of any of such documents:

(i) through (iv) No Change.

(B) No offering of securities subject to this Rule shall commence unless:

(i) The documents and information specified in subparagraphs (5) and (6) below have been filed with and reviewed by *NASD* [the Association]; and

(ii) *NASD* [the Association] has provided an opinion that it has no objections to the proposed underwriting and other terms and arrangements or an opinion that the proposed underwriting and other terms and arrangements are unfair and unreasonable. If *NASD's* [the Association's] opinion states that the proposed underwriting and other terms and arrangements are unfair and unreasonable, the member may file modifications to the proposed underwriting and other terms and arrangements for further review.

(C) Any member acting as a managing underwriter or in a similar capacity that has been informed of an opinion by *NASD* [the Association], or a determination by the appropriate standing committee of the Board of Governors, that the proposed underwriting terms and arrangements of a proposed offering are unfair or unreasonable, and the proposed terms and arrangements have not been modified to conform to the standards of fairness and reasonableness, shall notify all other members proposing to participate in the offering of that opinion or determination at a time sufficiently prior to the effective date of the offering or the commencement of sales so the other members will have an opportunity as a result of specific notice to comply with their obligation not to participate in any way in the distribution of a public offering containing arrangements, terms and conditions *that* [which] are unfair or unreasonable.

(5) Documents To Be Filed

(A) The following documents relating to all proposed public offerings of securities that are required to be filed under subparagraph (b)(4) above shall be filed with *NASD* [the Association] for review:

(i) No Change.

(ii) Three copies of any proposed underwriting agreement, agreement among underwriters, selected dealers agreement, agency agreement, purchase agreement, letter of intent, consulting agreement, partnership agreement, underwriter's warrant agreement, escrow agreement, and any other document *that* [which] describes the underwriting or other arrangements in connection with or related to the distribution, and the terms and conditions relating thereto; and any other information or documents *that* [which] may be material to or part of the said arrangements, terms and conditions and *that* [which] may have a bearing on *NASD's* [the Association's] review;

(iii) No Change.

[3] See letter dated May 28, 2003, from Stephanie Dumont, Associate General Counsel, Office of General Counsel, Regulatory Policy and Oversight, NASD, to Katherine A. England, Assistant Director, Division of Market Regulation (''Division''), Commission (''Amendment No. 1''). In Amendment No. 1, NASD amended the proposal to redefine the term ''NASD'' in the proposed rule text and to revise and clarify its discussion of the purpose of the proposed rule change. The changes to the purpose section were subsequently amended by Amendment No. 2.

[4] See letter dated July 7, 2003, from Stephanie Dumont, Associate General Counsel, Office of General Counsel, Regulatory Policy and Oversight, NASD, to Katherine A. England, Assistant Director, Division, Commission (''Amendment No. 2''). In Amendment No. 2, NASD amended the proposal to include additional amendments to the proposed rule text by, in part, deleting references to NASD Regulation, Inc., and to revise and clarify its discussion of the purpose of the proposed rule change.

[5] 15 U.S.C. 78s(b)(3)(A)(iii).

[6] 17 CFR 240.19b–4(f)(3).

[7] For purposes of calculating the 60-day period within which the Commission may summarily abrogate the proposed rule change under Section 19(b)(3)(C) of the Act, the Commission considers the period to commence on July 9, 2003, the date NASD filed Amendment No. 2. See 15 U.S.C. 78s(b)(3)(C).

* This Department is located at 9509 Key West Avenue, Rockville, Maryland 20850.

(iv) Three copies of the final registration statement declared effective by the Commission or equivalent final offering document and a list of the members of the underwriting syndicate, if not indicated therein, and one copy of the executed form of the final underwriting documents and any other document submitted to *NASD* [the Association] for review.

(B) All documents that are filed with the Commission through the Commission's Electronic Data Gathering and Retrieval System shall be treated as filed with *NASD* [the Association].

(6) Information Required To Be Filed

(A) Any person filing documents that are required to be filed under paragraph (b)(4) above shall provide the following information with respect to the offering through *NASD's* [the Association's] electronic filing system:

(i) through (v) No Change.

(vi) A detailed explanation and any documents related to the modification of any item of underwriting compensation subsequent to the review and approval of such compensation by *NASD* [the Association]; and

(vii) Any other information required by *NASD's* [the Association's] electronic filing system.

(B) Any person filing documents pursuant to subparagraph (b)(5) above shall notify *NASD* [the Association] through its electronic filing system that the offering has been declared effective or approved by the Commission or other agency no later than one business day following such declaration or approval or that the offering has been withdrawn or abandoned within three business days following the withdrawal or decision to abandon the offering.

(7) Offerings Exempt From Filing

Notwithstanding the provisions of subparagraph (1) above, documents and information related to the following public offerings need not be filed with *NASD* [the Association] for review, unless subject to the provisions of Rule 2720. However, it shall be deemed a violation of this Rule or Rule 2810, for a member to participate in any way in such public offerings if the underwriting or other arrangements in connection with the offering are not in compliance with this Rule or Rule 2810, as applicable:

(A) through (G) No Change.

(8) No Change.

(9) Offerings Required To Be Filed

Documents and information relating to all other public offerings including, but not limited to, the following must be filed with *NASD* [the Association] for review:

(A) through (J) No Change.

(10) Request for Underwriting Activity Report

Notwithstanding the availability of an exemption from filing under subparagraph (b)(7) of this Rule, a member acting as a manager (or in a similar capacity) of a distribution of a publicly traded subject [security] or reference security that is subject to SEC Rule 101 or an ''actively-traded'' security under SEC Rule 101 (except for a security listed on a national securities exchange) shall submit a request to the *Market Regulation* [Corporate Financing] Department for an Underwriting Activity Report with respect to the subject security and/or reference security in order to facilitate compliance with SEC Rules 101, 103, or 104, and other distribution-related *NASD* Rules [of the Association]. The request shall be submitted at the time a registration statement or similar offering document is filed with the *Corporate Financing* Department, the SEC, or other regulatory agency or, if not filed with any regulatory agency, at least two (2) business days prior to the commencement of the restricted period under SEC Rule 101. The request shall include a copy of the registration statement or similar offering document (if not previously submitted pursuant to subparagraph (b)(5) of this Rule). If no member is acting as managing underwriter of such distribution, each member that is a distribution participant or an affiliated purchaser shall submit a request for an Underwriting Activity Report, unless another member has assumed responsibility for compliance with this subparagraph. For purposes of subparagraphs (b)*(10)* [(11)] and *(11)* [(12)], SEC Rules 100, 101, 103, and 104 are rules of the Commission adopted under Regulation M and the following terms shall have the meanings as defined in SEC Rule 100: ''distribution,'' ''distribution participant,'' ''reference security,'' ''restricted period,'' and ''subject security.''

(11) Submission of Pricing Information

A member acting as a manager (or in a similar capacity) of a distribution of securities that are listed on a national securities exchange and considered a subject security or reference security that is subject to SEC Rule 101 or an ''actively-traded'' security under SEC Rule 101 or a distribution of any other securities that are considered ''actively-traded'' under SEC Rule 101 shall provide written notice to the Market Regulation Department [of NASD Regulation, Inc.], no later than the close of business the day the offering terminates, that includes the date and time of the pricing of the offering, the offering price, and the time the offering terminated, which notice may be submitted on the Underwriting Activity Report.

(c) Underwriting Compensation and Arrangements

(1) through (2) No Change.

(3) Items of Compensation

(A) No Change.

(B) Expenses customarily borne by an issuer, such as printing costs; SEC, ''blue sky'' and other registration fees; *NASD* [Association] filing fees; and accountant's fees, shall be excluded from underwriter's compensation whether or not paid through an underwriter.

(4) Determination of Whether Compensation Is Received in Connection With the Offering

(A) All items of value received or to be received by the underwriter and related persons during the twelve (12) month period immediately preceding the filing of the registration statement or similar document, and at the time of and subsequent to the public offering, will be examined to determine whether such items of value are underwriting compensation in connection with the offering and, if received during the six (6) month period immediately preceding the filing of the registration statement or similar document, will be presumed to be underwriting compensation received in connection with the offering, provided, however, that such presumption may be rebutted on the basis of information satisfactory to *NASD* [the Association] to support a finding that the receipt of an item is not in connection with the offering and shall not include cash discounts or commissions received in connection with a prior distribution of the issuer's securities.

(B) through (D) No Change.

(E) Notwithstanding the provisions of subparagraph (3)(A)(vi) above, financial consulting and advisory fees may be excluded from underwriting compensation upon a finding by *NASD* [the Association], on the basis of information satisfactory to it, that an ongoing relationship between the issuer and the underwriter and related person has been established at least twelve (12) months prior to the filing of the registration statement or similar document or that the relationship, if established subsequent to that time, was not entered into in connection with the offering, and that actual services have been or will be rendered *that* [which]

were not or will not be in connection with or related to the offering.

(5) Valuation of Non-Cash Compensation

For purposes of determining the value to be assigned to securities received as underwriting compensation, the following criteria and procedures shall be applied:

(A) No underwriter and related person may receive a security or a warrant for a security as compensation in connection with the distribution of a public offering that is different than the security to be offered to the public unless the security received as compensation has a bona fide independent market, provided, however, that:

(i) In exceptional and unusual circumstances, upon good cause shown, such arrangement may be permitted by *NASD* [the Association]; and

(ii) No Change.

(B) through (D) No Change.

(6) Unreasonable Terms and Arrangements

(A) No member or person associated with a member shall participate in any manner in a public offering of securities after any arrangement proposed in connection with the public offering, or the terms and conditions relating thereto, has been determined to be unfair or unreasonable pursuant to this Rule or inconsistent with any By-Law or any Rule or regulation of *NASD* [the Association].

(B) Without limiting the foregoing, the following terms and arrangements, when proposed in connection with the distribution of a public offering of securities, shall be unfair and unreasonable:

(i) through (iv) No Change.

(v) Any ''tail fee'' arrangement granted to the underwriter and related persons that has a duration of more than two (2) years from the date the member's services are terminated, in the event that the offering is not completed in accordance with the agreement between the issuer and the underwriter and the issuer subsequently consummates a similar transaction, except that a member may demonstrate on the basis of information satisfactory to *NASD* [the Association] that an arrangement of more than two (2) years is not unfair or unreasonable under the circumstances.

(vi) through (xv) No Change.

(C) No Change.

(7) through (8) No Change.

(d) Exemptions. Pursuant to the Rule 9600 Series, *NASD* [the Association] may exempt a member or person associated with a member from the provisions of this Rule for good cause shown.

* * * * *

4200. Definitions

(a) For purposes of the Rule 4000 Series, unless the context requires otherwise:

(1) through (29) No Change.

(30) ''Normal unit of trading'' means 100 shares of a security unless, with respect to a particular security, *NASD* [the Association] determines that a normal unit of trading shall constitute other than 100 shares. If a normal unit of trading is other than 100 shares, a special identifier shall be appended to the issuer's Nasdaq symbol.

(31) through (36) No Change.

(37) ''Underwriting Activity Report'' is a report provided by the *Market Regulation Department* [Corporate Financing Department of NASD Regulation, Inc.] in connection with a distribution of securities subject to SEC Rule 101 pursuant to Rule 2710(b)(11) and includes forms that are submitted by members to comply with their notification obligations under Rules 4614, 4619, and 4623.

(b) No Change.

* * * * *

6540. Requirements Applicable to Market Makers

(a) Market-maker participation in the OTCBB is voluntary and open to any *NASD* [Association] member firm that satisfies the financial/operational requirements applicable to member firms engaged in over-the-counter market making; subscribes to Level 3 Nasdaq Workstation service; and demonstrates compliance with (or qualifies for an exception from) SEC Rule 15c2–11 at the time of initiating (or resuming) the quotation of any OTCBB-eligible security in the Service. Rule 6740 sets forth the procedure for demonstrating compliance with SEC Rule 15c2–11.

(b) through (c) No Change.

(d) OTCBB-eligible securities that meet the frequency of quotation requirement for the so called ''piggyback'' exception in SEC Rule 15c2–11(f)(3)(i) are identified in the Service as ''active'' securities. A member can commence market making in any active security by registering as a market maker through a Nasdaq Workstation at the firm. In all other instances, a member must follow the procedure contained in this Rule to become qualified as a market maker in a particular OTCBB-eligible security.*

* No change to text of footnote.

(1) Permissible Quotation Entries

(A) through (C) No Change.

(D) Any member that intends to be a distribution participant in a distribution of securities subject to SEC Rule 101, or is an affiliated purchaser in such distribution, and is entering quotations in an OTCBB-eligible security that is the subject security or reference security of such distribution shall, unless another member has assumed responsibility for compliance with this paragraph:

(i) and (ii) No Change.

(iii) Provide written notice to the Corporate Financing Department [of NASD Regulation, Inc.] of its intention to impose a penalty bid or to conduct syndicate covering transactions pursuant to SEC Rule 104 prior to imposing the penalty bid or engaging in the first syndicate covering transaction. Such notice shall include information as to the date the penalty bid or first syndicate covering transaction will occur; and

(iv) Provide written notice to the Market Regulation Department [of NASD Regulation, Inc.] by the close of business on the day the offering terminates that includes the date and time of the pricing of the offering, the offering price, and the time the offering terminated.

(E) The written notice required by subparagraphs *(d)*[(b)](1)(D)(i), (iii) and (iv) of this Rule may be submitted on the Underwriting Activity Report provided by the *Market Regulation Department.* [Corporate Financing Department of NASD Regulation, Inc.]

(F) For purposes of subparagraph *(d)*[(b)](1)(D), SEC Rules 100, 101, 103 and 104 are rules of the Commission adopted under Regulation M and the following terms shall have the meanings as defined in SEC Rule 100: ''affiliated purchaser,'' ''distribution,'' ''distribution participant,'' ''penalty bid,'' ''reference security,'' ''restricted period,'' ''stabilizing,'' ''subject security,'' and ''syndicate covering transaction.''

(2) Impermissible Quotation Entries

(A) No Change.

(B) No member or person associated with a member shall enter into the Service a priced bid and/or offer, an unpriced indication of interest (including ''bid wanted'' or ''offer wanted'' indications), or a bid or offer accompanied by a modifier to reflect unsolicited customer interest in any security of an issuer that does not make filings with the [Securities and Exchange] Commission through the Electronic Data Gathering, Analysis, and Retrieval (''EDGAR'') system (or in

paper format, if specifically permitted by Commission Rules) unless the member:

(i) Notifies *NASD* [the Association] of the issuer of the security's schedule for the filing of all periodic reports or financial reports required pursuant to the Act or regulatory authority, respectively, and the identity of the regulatory authority with which such reports are filed, or ensures that such notice is provided; and

(ii) Provides to *NASD* [the Association] the issuer's periodic reports required pursuant to the Act, or the issuer's financial reports required by regulatory authority, prior to the expiration of the grace period described in Rule 6530(a)(3), or ensures that the required periodic reports are provided to *NASD* [the Association] within that time period.

(3) No Change.

(4) More Than One Trading Location

In cases where a market maker has more than one trading location, a fifth character, geographic indicator shall be appended to the market maker's identifier for that security. Indicators are established by *NASD* [the Association] and published from time to time in the Nasdaq/CQS symbol directory.

(5) No Change.

(e) No Change.

* * * * *

II. Self-Regulatory Organization's Statement of the Purpose of, and Statutory Basis for, the Proposed Rule Change

In its filing with the Commission, NASD included statements concerning the purpose of and basis for the proposed rule change and discussed any comments it received on the proposed rule change. The text of these statements may be examined at the places specified in Item IV below. NASD has prepared summaries, set forth in Sections A, B, and C below, of the most significant aspects of such statements.

A. Self-Regulatory Organization's Statement of the Purpose of, and Statutory Basis for, the Proposed Rule Change

1. Purpose

NASD Rules currently require a member acting as the lead manager of a distribution of a publicly traded security that is subject to SEC Rule 101 of Regulation M to submit a request for a UAR to the Corporate Financing Department. A UAR, among other things, provides information to members to assist them in complying with the restricted periods of SEC Rule 101. A member must request a UAR at the time a registration statement or similar offering document is filed with the Corporate Financing Department, the Commission, or other regulatory agency or, if not filed with any regulatory agency, at least two business days prior to the commencement of the restricted period under SEC Rule 101.

Since June 2002, NASD staff has asked that members submit their requests for UARs to the Market Regulation Department rather than the Corporate Financing Department. NASD staff believes that the Market Regulation Department is better suited to handle member UAR requests because the Market Regulation Department has more timely access to market information. Accordingly, NASD staff is proposing amendments to NASD Rules to require that members submit a request for a UAR to the Market Regulation Department instead of the Corporate Financing Department. NASD represents that the proposed rule change would not affect the substantive content of UAR requests, the manner in which a request can be submitted (*e.g.*, via mail, e-mail, or fax), or the time period associated with a request.

Finally, NASD no longer refers to itself or its subsidiary, NASD Regulation, Inc., using their full corporate names, ''the Association,'' ''the NASD'' or ''NASD Regulation, Inc.'' Instead, NASD uses ''NASD'' unless otherwise appropriate for corporate or regulatory reasons. Accordingly, NASD proposes to replace several references to ''the Association'' and ''the NASD'' in the text of the proposed rule change with ''NASD'' and to delete several references to ''NASD Regulation, Inc.'' Although NASD is proposing to delete the name ''NASD Regulation, Inc.,'' NASD represents that NASD Regulation, Inc. will continue to perform the functions described in the rule.[8]

2. Statutory Basis

NASD believes that the proposed rule change is consistent with the provisions of Section 15A(b)(6) of the Act,[9] which requires, among other things, that NASD rules be designed to prevent fraudulent and manipulative acts and practices, to promote just and equitable principles of trade, and, in general, to protect investors and the public interest. NASD believes that the proposed rule change will improve processing of UAR requests by NASD.

[8] *See* Amendment No. 2, *supra* note 4.

[9] 15 U.S.C. 78*o*–3(b)(6).

B. Self-Regulatory Organization's Statement on Burden on Competition

NASD does not believe that the proposed rule change will result in any burden on competition that is not necessary or appropriate in furtherance of the purposes of the Act, as amended.

C. Self-Regulatory Organization's Statement on Comments on the Proposed Rule Change Received From Members, Participants, or Others

Written comments were neither solicited nor received.

III. Date of Effectiveness of the Proposed Rule Change and Timing for Commission Action

NASD has designated the proposed rule change as administrative under Section 19(b)(3)(A) of the Act[10] and subparagraph (f)(3) of Rule 19b–4 thereunder,[11] which renders the proposal effective upon filing with the Commission. At any time within 60 days of the filing, the Commission may summarily abrogate this proposed rule change if it appears to the Commission that such action is necessary or appropriate in the public interest, for the protection of investors, or otherwise in furtherance of the purposes of the Act.[12]

IV. Solicitation of Comments

Interested persons are invited to submit written data, views, and arguments concerning the foregoing, including whether the proposed rule change, as amended, is consistent with the Act. Persons making written submissions should file six copies thereof with the Secretary, Securities and Exchange Commission, 450 Fifth Street, NW., Washington, DC 20549–0609. Copies of the submission, all subsequent amendments, all written statements with respect to the proposed rule change that are filed with the Commission, and all written communications relating to the proposed rule change between the Commission and any person, other than those that may be withheld from the public in accordance with the provisions of 5 U.S.C. 552, will be available for inspection and copying in the Commission's Public Reference Room. Copies of such filing will also be available for inspection and copying at

[10] 15 U.S.C. 78s(b)(3)(A).

[11] 17 CFR 240.19b–4(f)(3).

[12] For purposes of calculating the 60-day period within which the Commission may summarily abrogate the proposed rule change under Section 19(b)(3)(C) of the Act, the Commission considers the period to commence on July 9, 2003, the date NASD filed Amendment No. 2. See 15 U.S.C. 78s(b)(3)(C).

the principal office of the NASD. All submissions should refer to file number SR–NASD–2003–75 and should be submitted by August 20, 2003.

For the Commission, by the Division of Market Regulation, pursuant to delegated authority.[13]

J. Lynn Taylor,

Assistant Secretary.

[FR Doc. 03–19291 Filed 7–29–03; 8:45 am]

BILLING CODE 8010–01–P

[13] 17 CFR 200.30–3(a)(12).

DEPARTMENT OF STATE

[Public Notice 4426]

Culturally Significant Objects Imported for Exhibition Determinations: ''The Circle of Bliss: Buddhist Meditational Art''

AGENCY: Department of State.

ACTION: Notice.

SUMMARY: Notice is hereby given of the following determinations: Pursuant to the authority vested in me by the Act of October 19, 1965 (79 Stat. 985; 22 U.S.C. 2459), Executive Order 12047 of March 27, 1978, the Foreign Affairs Reform and Restructuring Act of 1998 (112 Stat. 2681, *et seq.*; 22 U.S.C. 6501 note, *et seq.*), Delegation of Authority No. 234 of October 1, 1999, Delegation of Authority No. 236 of October 19, 1999, as amended, and Delegation of Authority No. 257 of April 15, 2003 [68 FR 19875], I hereby determine that the objects to be included in the exhibition ''The Circle of Bliss: Buddhist Meditational Art,'' imported from abroad for temporary exhibition within the United States, are of cultural significance. The objects are imported pursuant to loan agreements with the foreign owners. I also determine that the exhibition or display of the exhibit objects at the Los Angeles County Museum of Art, Los Angles, CA, from on or about October 5, 2003, to on or about January 4, 2004 and the Columbus Museum of Art, Columbus, OH, from on or about February 8, 2004, to on or about May 9, 2004, and at possible additional venues yet to be determined, is in the national interest. Public Notice of these Determinations is ordered to be published in the **Federal Register**.

FOR FURTHER INFORMATION CONTACT: For further information, including a list of the exhibit objects, contact Julianne Simpson, Attorney-Adviser, Office of the Legal Adviser, U.S. Department of State, (telephone: 202/619–6529). The address is U.S. Department of State, SA–44, 301 4th Street SW., Room 700, Washington, DC 20547–0001.

Dated: July 22, 2003.

C. Miller Crouch,

Principal Deputy Assistant Secretary for Educational and Cultural Affairs, Department of State.

[FR Doc. 03–19433 Filed 7–29–03; 8:45 am]

BILLING CODE 4710–08–P

DEPARTMENT OF STATE

[Public Notice 4427]

Culturally Significant Objects Imported for Exhibition; Determinations: ''El Greco''

AGENCY: Department of State.

ACTION: Notice.

SUMMARY: Notice is hereby given of the following determinations: Pursuant to the authority vested in me by the Act of October 19, 1965 (79 Stat. 985; 22 U.S.C. 2459), Executive Order 12047 of March 27, 1978, the Foreign Affairs Reform and Restructuring Act of 1998 (112 Stat. 2681, *et seq.*; 22 U.S.C. 6501 note, *et seq.*), Delegation of Authority No. 234 of October 1, 1999, and Delegation of Authority No. 236 of October 19, 1999, as amended, and Delegation of Authority No. 257 of April 15, 2003 [68 FR 19875], I hereby determine that the objects to be included in the exhibition ''El Greco,'' imported from abroad for temporary exhibition within the United States, are of cultural significance. The objects are imported pursuant to a loan agreement with the foreign owners. I also determine that the exhibition or display of the exhibit objects at The Metropolitan Museum of Art, New York, NY from on or about September 29, 2003 to on or about January 11, 2004, and at possible additional venues yet to be determined, is in the national interest. Public Notice of these Determinations is ordered to be published in the **Federal Register**.

FOR FURTHER INFORMATION CONTACT: For further information, including a list of the exhibit objects, contact Carol B. Epstein, Attorney-Adviser, Office of the Legal Adviser, U.S. Department of State, (telephone: 202/619–6981). The address is U.S. Department of State, SA–44, 301 4th Street, SW., Room 700, Washington, DC 20547–0001.

Dated: July 25, 2003.

C. Miller Crouch,

Principal Deputy Assistant Secretary for Educational and Cultural Affairs, Department of State.

[FR Doc. 03–19419 Filed 7–29–03; 8:45 am]

BILLING CODE 4710–08–P

DEPARTMENT OF STATE

[Public Notice 4425]

Culturally Significant Objects Imported for Exhibition Determinations: ''The Heart of Spain''

AGENCY: Department of State.

ACTION: Notice.

SUMMARY: Notice is hereby given of the following determinations: Pursuant to the authority vested in me by the Act of October 19, 1965 (79 Stat. 985; 22 U.S.C. 2459), Executive Order 12047 of March 27, 1978, the Foreign Affairs Reform and Restructuring Act of 1998 (112 Stat. 2681, *et seq.*; 22 U.S.C. 6501 note, *et seq.*), Delegation of Authority No. 234 of October 1, 1999, Delegation of Authority No. 236 of October 19, 1999, as amended, and Delegation of Authority No. 257 of April 15, 2003 [68 FR 19875], I hereby determine that the objects to be included in the exhibition ''The Heart of Spain,'' imported from abroad for temporary exhibition within the United States, are of cultural significance. The objects are imported pursuant to loan agreements with the foreign owners. I also determine that the exhibition or display of the exhibit objects at the Alexandria Museum of Art, Alexandria, LA, from on or about September 1, 2003, to on or about November 30, 2003, and at possible additional venues yet to be determined, is in the national interest. Public Notice of these Determinations is ordered to be published in the **Federal Register**.

FOR FURTHER INFORMATION CONTACT: For further information, including a list of the exhibit objects, contact Julianne Simpson, Attorney-Adviser, Office of the Legal Adviser, U.S. Department of State, (telephone: 202/619–6529). The address is U.S. Department of State, SA–44, 301 4th Street, SW., Room 700, Washington, DC 20547–0001.

Dated: July 22, 2003.

C. Miller Crouch,

Principal Deputy Assistant Secretary for Educational and Cultural Affairs, Department of State.

[FR Doc. 03–19432 Filed 7–29–03; 8:45 am]

BILLING CODE 4710–08–P

DEPARTMENT OF STATE

[Public Notice: 4423]

United States-Egypt Science and Technology Joint Board; Public Announcement of a Science and Technology Program for Competitive Grants To Support International, Collaborative Projects in Science and Technology Between U.S. and Egyptian Cooperators

August 4, 2003.

AGENCY: U.S. Department of State.

ACTION: Notice.

EFFECTIVE DATE: August 4, 2003.

FOR FURTHER INFORMATION, CONTACT: Joan Mahoney, Program Administrator, U.S.—Egypt Science and Technology Grants Program, U.S. Embassy, Cairo/ECPO, Unit 64900, Box 6, APO AE 09839–4900; phone: 011–(20–2) 797–2925; fax: 011–(20–2) 797–3150; E-mail: *mahoneyjm@state.gov*.

The 2003 Program Announcement, including proposal guidelines, will be available starting August 4, 2003 on the Joint Board Web site: *www.usembassy.egnet.net/usegypt/joint-st.htm*.

SUPPLEMENTARY INFORMATION: Authority: This program is established under 22 U.S.C. 2656d and the Agreement for Scientific and Technological Cooperation between the Government of the United States of America and the Government of the Arab Republic of Egypt. A solicitation for this program will begin August 4, 2003. This program will provide modest grants for successfully competitive proposals for binational collaborative projects and other activities submitted by U.S. and Egyptian experts. Projects must help the United States and Egypt utilize science and apply technology by providing opportunities to exchange ideas, information, skills, and techniques, and to collaborate on scientific and technological endeavors of mutual interest and benefit. Proposals which fully meet the submission requirements as outlined in the Program Announcement will receive peer reviews. Proposals considered for funding in Fiscal Year 2004 must be postmarked by November 4, 2003. All proposals will be considered; however, special consideration will be given to proposals that address priority areas defined/approved by the Joint Board. These include priorities in the areas of information technology, environmental technologies, biotechnology, energy, standards and metrology, and manufacturing technologies. More information on these priorities and copies of the Program Announcement/Application may be obtained by request.

Dated: July 25, 2003.

Kay Anske,

Director, Office of Science and Technology Cooperation, Bureau of Oceans and International Environmental and Scientific Affairs and, Chair, U.S.–Egypt S&T Joint Board, Department of State.

[FR Doc. 03–19428 Filed 7–29–03; 8:45 am]

BILLING CODE 4710–09–P

DEPARTMENT OF STATE

[Public Notice: 4424]

United States-Egypt Science and Technology Joint Board; Public Announcement of a Science and Technology Program for Competitive Grants to Support Junior Scientist Development Visits by U.S. and Egyptian Scientists

August 11, 2003.

AGENCY: Department of State.

ACTION: Notice.

EFFECTIVE DATE: August 11, 2003.

FOR FURTHER INFORMATION, CONTACT: Joan Mahoney, Program Administrator, U.S.—Egypt Science and Technology Grants Program, U.S. Embassy, Cairo/ECPO, Unit 64900, Box 6, APO AE 09839–4900; phone: 011-(20–2) 797–2925; fax: 011–(202) 797–3150; E-mail: *mahoneyjm@state.gov*

The 2003 Program guidelines for Junior Scientist Development visits will be available starting August 11, 2003 on the Joint Board web site: *http://www.usembassy.egnet.net/usegypt/joint-st.htm*.

SUPPLEMENTARY INFORMATION:

Authority: This program is established under 22 U.S.C. 2656d and the Agreement for Scientific and Technological Cooperation between the Government of the United States of America and the Government of the Arab Republic of Egypt.

A solicitation for this program will begin August 11, 2003. This program will provide modest grants for successfully competitive proposals for development visits by Junior American Scientists to Egypt; and Junior Egyptian Scientists to the United States.

Applicants must be scientists who have received their PhD within the past ten years or for U.S. applicants only may be currently enrolled in a PhD program. Proposals considered for funding must be postmarked by October 28, 2003. All proposals, which fully meet the submission requirements, will be considered; however, special consideration will be given to proposals in the areas of Biotechnology, Standards and Metrology, Environmental Technologies, Energy, Manufacturing Technologies and Information Technology. More information on these priorities and copies of the Program Announcement/Application may be obtained upon request.

Dated: July 25, 2003.

Kay Anske,

Director, Office of Science and Technology Cooperation, Bureau of Oceans and International Environmental and Scientific Affairs, and Chair, U.S.—Egypt S&T Joint Board, Department of State.

[FR Doc. 03–19431 Filed 7–29–03; 8:45 am]

BILLING CODE 4710–09–P

DEPARTMENT OF STATE

[Public Notice 4428]

Bureau of Nonproliferation; Imposition of Nonproliferation Measures on an Entity in China, Including a Ban on U.S. Government Procurement

AGENCY: Bureau of Nonproliferation, Department of State.

ACTION: Notice.

SUMMARY: The U.S Government has determined that a foreign entity has engaged in missile technology proliferation activities that require the imposition of measures pursuant to Executive Order 12938 of November 14, 1994, as amended by Executive Order 13094 of July 28, 1998.

EFFECTIVE DATE: July 30, 2003.

FOR FURTHER INFORMATION CONTACT: On general issues: Vann H. Van Diepen, Office of Chemical, Biological, and Missile Nonproliferation, Bureau of Nonproliferation, Department of State, (202–647–1142). On import ban issues: Rochelle Stern, Chief, Policy Planning and Program Management, Office of Foreign Assets Control, Department of the Treasury, (202–622–2500). On U.S. Government procurement ban issues: Gladys Gines, Office of the Procurement Executive, Department of State, (703–516–1691).

SUPPLEMENTARY INFORMATION: Pursuant to the authorities vested in the President by the Constitution and the laws of the United States of America, including the International Emergency Economic Powers Act (50 U.S.C. 1701 *et seq.*) (IEEPA), the National Emergencies Act (50 U.S.C. 1601 *et seq.*), the Arms Export Control Act (22 U.S.C. 2751 *et seq.*), and section 301 of title 3, United States Code, and Executive Order 12938 of November 14, 1994, as amended, the U.S. Government determined on July 21, 2003, that the following Chinese person has engaged in proliferation activities

that require the imposition of measures pursuant to sections 4(b), 4(c), and 4(d) of Executive Order 12938: China Precision Machinery Import/Export Corporation (CPMIEC)

Accordingly, pursuant to the provisions of Executive Order 12938, the following measures are imposed on this entity, its subunits, and successors:

1. All departments and agencies of the United States Government shall not procure or enter into any contract for the procurement of any goods, technology, or services from these entities including the termination of existing contracts;

2. All departments and agencies of the United States Government shall not provide any assistance to these entities, and shall not obligate further funds for such purposes;

3. The Secretary of the Treasury shall prohibit the importation into the United States of any goods, technology, or services produced or provided by these entities, other than information or informational materials within the meaning of section 203(b)(3) of the International Emergency Economic Powers Act (50 U.S.C. 1702(b)(3)).

These measures shall be implemented by the responsible departments and agencies as provided in Executive Order 12938.

In addition, pursuant to section 126.7(a)(1) of the International Traffic in Arms Regulations, it is deemed that suspending the above-named entity from participating in any activities subject to Section 38 of the Arms Export Control Act would be in furtherance of the national security and foreign policy of the United States.

Therefore, until further notice, the Department of State is hereby suspending all licenses and other approvals for: (a) Exports and other transfers of defense articles and defense services from the United States; (b) transfers of U.S.-origin defense articles and defense services from foreign destinations; and (c) temporary import of defense articles to or from the above-named entity.

Moreover, it is the policy of the United States to deny licenses and other approvals for exports and temporary imports of defense articles and defense services destined for this entity.

Dated: July 24, 2003.

Susan F. Burk,

Acting Assistant Secretary of State for Nonproliferation, Department of State.

[FR Doc. 03–19417 Filed 7–29–03; 8:45 am]

BILLING CODE 4710–25–U

DEPARTMENT OF STATE

[Public Notice 4422]

Notice of Receipt of Application for Presidential Permit for the Construction of a New International Border Crossing

Notice is hereby given that the Department of State has received an application from the Maine Department of Transportation for a Presidential Permit seeking authorization for the construction, operation and maintenance of an international bridge between Calais, Maine and St. Stephen, New Brunswick, Canada. The proposed four lane bridge would be located approximately 1.5 miles from the existing Milltown international crossing.

The Department's jurisdiction with respect to this application is based upon Executive Order 11423, dated August 16, 1968, as amended, and the International Bridge Act of 1972, (33 U.S.C. 535 *et seq.*).

As required by E.O. 11423, the Department is circulating this application to concerned agencies for comment.

Interested persons may submit their views regarding this application in writing by September 10, 2003 to Ms. Evelyn Wheeler, Economic Officer, Office of Canadian Affairs, Room 3917, Department of State, 2201 C St. NW., Washington, DC 20520.

The application and related documents made part of the record to be considered by the Department of State in connection with this application are available for review in the Office of Canadian Affairs during normal business hours throughout the comment period.

Any questions related to this notice may be addressed to Ms. Wheeler at the above address or by fax at (202) 647–4088.

Dated: July 25, 2003.

Terry A. Breese,

Director, Office of Canadian Affairs, Department of State.

[FR Doc. 03–19427 Filed 7–29–03; 8:45 am]

BILLING CODE 4710–29–P

DEPARTMENT OF TRANSPORTATION

Federal Aviation Administration

Advisory Circular; Turbine Engine Continued Rotation and Rotor Locking

AGENCY: Federal Aviation Administration, DOT.

ACTION: Notice of availability of advisory circular.

SUMMARY: The Federal Aviation Administration (FAA) announces the availability of Advisory Circular (AC) Number 33.74/92–1A, Turbine Engine Continued Rotation and Rotor Locking.

DATES: The Engine and Propeller Directorate, Aircraft Certification Service, issued AC 33.74/92–1A on July 23, 2003.

FOR FURTHER INFORMATION CONTACT: Marc Bouthillier, Engine and Propeller Standards Staff, ANE–110, 12 New England Executive Park, Burlington, MA 01803; telephone: (781) 238–7120; fax: (781) 238–7199; e–mail: *marc.bouthillier@faa.gov*. The subject AC is available on the Internet at the following address: *http://www.airweb.faa.gov/rgl.*

SUPPLEMENTARY INFORMATION: The FAA published a notice in the **Federal Register** on July 23, 2002 (67 FR 48246) to announce the availability of the proposed AC and invite interested parties to comment.

Background

This AC provides guidance and acceptable methods, but not the only methods, that may be used to demonstrate compliance with the continued rotation and rotor locking requirements of §§ 33.74 and 33.92.

(Authority: 49 U.S.C. 106(g), 40113, 44701–44702, 44704.)

Issued in Burlington, Massachusetts, on July 23, 2003.

Francis A. Favara,

Assistant Manager, Engine and Propeller Directorate, Aircraft Certification Service.

[FR Doc. 03–19407 Filed 7–29–03; 8:45 am]

BILLING CODE 4910–13–M

DEPARTMENT OF TRANSPORTATION

Federal Aviation Administration

Agency Information Collection Activities Under OMB Review

AGENCY: Federal Aviation Administration (FAA), DOT.

ACTION: Notice.

SUMMARY: In compliance with the Paperwork Reduction Act of 1995 (44 U.S.C. 3501 *et seq.*), this notice announces that the Information Collection Requests (ICR) abstracted below have been forwarded to the Office of Management and Budget (OMB) for extension of the currently approved collections. The ICR describes the nature of the information collections and the expected burden. The **Federal**

Register notices with a 60-day comment period soliciting comments on the following collections of information were published on April 17, 2003 on page 19066.

DATES: Comments must be submitted on or before August 29, 2003.

FOR FURTHER INFORMATION CONTACT: Judy Street on (202) 267–9895.

SUPPLEMENTARY INFORMATION:

Federal Aviation Administration (FAA)

1. Title: Type Certification Procedures for Changed Products.

Type of Request: Extension of a currently approved collection.

OMB Control Number: 2120–0657.

Forms(s): N/A

Affected Public: A total of 2,558 applicants.

Abstract: This collection requires that applicants comply with the latest regulations in effect on the date of application for amended Type Certificates or Supplemental Type Certificates for aeronautical products. They now may incur an additional incremental administrative cost to determine the level of significance of the product change.

Estimated Annual Burden Hours: An estimated 18,815 hours annually.

2. Title: Noise Certification Standards for Subsonic Jet Airplanes and Subsonic Transport Category Large Airplanes.

Type of Request: Extension of a currently approved collection.

OMB Control Number: 2120–0659.

Forms(s) N/A.

Affected Public: A total of 10 applicants.

Abstract: Sections A36.5.2 and A36.5.2.5 of the Federal Aviation Administration (FAA) noise certificate standards for subsonic jet airplanes and subsonic transport category large airplanes (14 CFR part 36) contain information collection requirements. The information collected is needed for the applicant's noise certification compliance report in order to demonstrate compliance with part 36.

Estimated Annual Burden Hours: An estimated 1,350 hours annually.

3. Title: Flight Operational Quality Assurance (FOQA) Program.

Type of Request: Extension of a currently approved collection.

OMB Control Number: 2120–0660.

Forms(s): N/A.

Affected Public: A total of 30 air carriers.

Abstract: FOQA is a voluntary program for the routine collection and analysis of digital flight data from airplane operations. The purpose is to enable early corrective action for potential threats to safety. This NPRM codifies protection from punitive enforcement action based on FOQA information, and requires participating air carriers to provide aggregate FOQA data to the FAA.

Estimated Annual Burden Hours: An estimated 360 hours annually.

ADDRESSES: Send comments to the Office of Information and Regulatory Affairs, Office of Management and Budget, 725 17th NW., Washington, DC 20503, Attention FAA Desk Officer.

Comments are invited on: Whether the proposed collection of information is necessary for the proper performance of the function of the Department, including whether the information will have practical utility; the accuracy of the Department's estimates of the burden of the proposed information collection; ways to enhance the quality, utility and clarity of the information to be collected; and ways to minimize the burden of the collection of information on responders, including the use of automated collection techniques or other forms of information technology.

Issued in Washington, DC, on July 22, 2003.

Judith D. Street,

FAA Information Collection Clearance Officer, Standards and Information Division, APF–100.

[FR Doc. 03–19400 Filed 7–29–03; 8:45 am]

BILLING CODE 4910–13–P

DEPARTMENT OF TRANSPORTATION

Federal Aviation Administration

Environmental Impact Statement: Philadelphia International Airport Runway 17–35 Extension Project, Philadelphia, PA

AGENCY: Federal Aviation Administration (FAA), DOT.

ACTION: Notice of Intent.

SUMMARY: The FAA is issuing this notice to advise the public that an Environmental Impact Statement (EIS) will be prepared for the Philadelphia International Airport Runway 17–35 Extension Project. In 2002, although the Philadelphia International Airport (PHL or the Airport) was the 12th busiest airport in the United States in terms of the annual number of aircraft operations (departures and arrivals), it was the 5th most delayed airport in the country. The FAA has also identified PHL as a ''pacing'' airport—an airport that contributes to delays throughout the national airports system. An airfield modeling and capacity/delay analysis performed during the Airport's on-going Master Plan Update process determined that the average annual delay in 2000 at PHL was nearly 10 minutes per aircraft operation. This level of delay has not abated significantly since that time. Without improvements, the Master Plan Update forecasts that this average annual delay would increase to nearly 20 minutes per operations by 2010. Furthermore, it was determined that one of the major causes of the delay is inadequate airfield capacity because of the current configuration of the airfield. As a result, the City of Philadelphia is proposing major improvements to the Airport to increase airfield capacity at PHL in order to reduce existing and forecast delays. The FAA has concurred that a capacity and delay problem exists at PHL and that projects for alleviating this problem are subject to the preparation of an EIS under the National Environmental Policy Act (NEPA). The City proposes two projects to address immediate and long-term needs. One project, known as the Runway 17–35 Extension Project (the Runway 17–35 Project), which is the subject of this Notice of Intent, would provide a more immediate delay reduction for several years by extending the length of Runway 17–35. The second project, referred to as the Capacity Enhancement Program, is a major airfield redevelopment project that would provide greater relief from delay over a much longer period and is the subject of a separate Notice of Intent. The FAA, as lead federal agency, at the City of Philadelphia's request, has opted to prepare a separate EIS for each project because the Runway 17–35 Project will address the short-term need for delay reduction at PHL while the Capacity Enhancement Program will provide more comprehensive and longer-term delay reduction. The FAA will prepare the EISs concurrently and will take into account the potential cumulative impacts of each project, but a separate Public Scoping Meeting will be held for the Capacity Enhancement Program.

The U.S. Secretary of Transportation has chosen these proposed improvements as one of thirteen high priority transportation projects for expedited environmental review under Executive Order 13274, *Environmental Stewardship and Transportation Infrastructure Project Review.* The FAA and the environmental review agencies will be collaborating to undertake environmental streamlining and stewardship on both the Capacity Enhancement Program and the Runway 17–35 Project.

FOR FURTHER INFORMATION CONTACT: James B. Byers, Environmental Specialist, Federal Aviation

Administration, Harrisburg Airports District Office, 3905 Hartzdale Drive, Suite 508, Camp Hill, PA 17011. Telephone (717) 730–2833.

SUPPLEMENTARY INFORMATION: The FAA, in cooperation with the City of Philadelphia Department of Aviation, will prepare an EIS for the proposed project. The EIS for the Runway 17–35 Project will address a range of alternatives that would reduce existing and forecasted delays at PHL, including a No Build Alternative, a build alternative that would extend Runway 17–35 to the north by 600 feet and to the south by 440 feet, to a total length of 6,500 feet, as well as a range of other alternatives such as demand management alternatives and alternatives that are not within the jurisdiction of PHL or FAA, such as greater use of regional airports or other transportation modes. The EIS will also evaluate alternatives identified during the Scoping process that would reduce existing and forecasted delays at PHL. The FAA intends to use the preparation of this EIS to comply with Section 106 of the National Historic Preservation Act of 1966, as amended and any other applicable laws having public involvement requirements. Comments addressing this issue should be addressed to the listed contact person.

The FAA intends to conduct a Scoping process to gather input from all interested parties to help identify any issues of concern associated with the proposed project. In addition to this notice, Federal, State, and local agencies, which have jurisdiction by law or have special expertise with respect to any potential environmental impacts associated with the proposed project, will be notified by letter of an Agency Scoping Meeting to be held on August 19, 2003 from 8:30 a.m. to 4 p.m. at the Airport Executive Offices in Terminal E at the Philadelphia International Airport in Philadelphia, Pennsylvania. To notify the general public of the Scoping process, a legal notice will be placed in newspapers having general circulation in the project area describing proposed project. The newspaper notice will notify the public that a Scoping Meeting will be held to gain their input concerning the proposed project. The public scoping meeting is scheduled for 5 p.m. to 9 p.m. on August 12, 2003 at the Sheraton Suites and Four Points, Philadelphia Airport Complex, 4101 Island Avenue in Philadelphia, Pennsylvania. The format of the meeting will be an open house with project information displayed and representatives from the FAA and the Airport available to answer questions. A formal presentation will be held at 6 p.m. and repeated at 8 p.m. Written and oral comments will be accepted at each of the meetings. The public comment period on this initial Scoping phase of the EIS will end on September 3, 2003. Written comments will be accepted if postmarked on or before September 3, 2003 and should be sent to the address above.

The purpose of the Scoping Meeting is to receive comments from the public and answer questions regarding the scope and process related to the EIS.

Issued on: July 21, 2003.

James White,

Acting Manager, Airports Division, Eastern Region.

[FR Doc. 03–19402 Filed 7–29–03; 8:45 am]

BILLING CODE 4910–13–M

DEPARTMENT OF TRANSPORTATION

Federal Aviation Administration

Environmental Impact Statement: Philadelphia International Airport Capacity Enhancement Program, Philadelphia, PA

AGENCY: Federal Aviation Administration (FAA), DOT.

ACTION: Notice of Intent.

SUMMARY: The FAA is issuing this notice to advise the public that an Environmental Impact Statement (EIS) will be prepared for the Philadelphia International Airport Capacity Enhancement Program (Capacity Enhancement Program). In 2002, although the Philadelphia International Airport (PHL or the Airport) was the 12th busiest airport in the United States in terms of the annual number of aircraft operations (departures and arrivals), it was the 5th most delayed airport in the country. The FAA has also identified PHL as a ''pacing'' airport—an airport that contributes to delays throughout the national airports system. An airfield modeling and capacity/delay analysis performed during the Airport's on-going Master Plan Update process determined that the average annual delay in 2000 at PHL was nearly 10 minutes per aircraft operation. This level of delay has not abated significantly since that time. Without improvements, the Master Plan Update forecasts that this average annual delay would increase to nearly 20 minutes per operation by 2010. Furthermore, it was determined that one of the major causes of the delay is inadequate airfield capacity because of the current configuration of the airfield. As a result, the City of Philadelphia is proposing major improvements to increase airfield capacity at the Airport to reduce existing and forecast delays. The FAA has concurred that a capacity and delay problem exists at PHL and that projects for alleviating this problem are subject to the preparation of an EIS under the National Environmental Policy Act (NEPA). The City proposes two projects to address immediate and long-term needs. One project, known as the Runway 17–35 Extension Project (the Runway 17–35 Project) would provide a more immediate delay reduction for several years by extending the length of Runway 17–35 and is the subject of a separate Notice of Intent. The second project, referred to as the Capacity Enhancement Program, which is the subject of this Notice of Intent, is a major airfield redevelopment project that would provide greater relief from delay over a much longer period. The FAA, as lead federal agency, at the City of Philadelphia's request, has opted to prepare a separate EIS for each project because the Runway 17–35 Project will address the need for delay reduction at PHL in the short term while the Capacity Enhancement Program will provide a more comprehensive and longer-term delay reduction. The EISs will be prepared concurrently, but a separate Public Scoping Meeting will be held for the Runway 17–35 Project. The U.S. Secretary of Transportation has chosen these proposed improvements as one of thirteen high priority transportation projects for expedited environmental review under Executive Order 13274, Environmental Stewardship and Transportation Infrastructure Project Review. The FAA and the environmental review agencies will be collaborating to undertake environmental streamlining and stewardship on both the Capacity Enhancement Program and the Runway 17–35 Project.

FOR FURTHER INFORMATION CONTACT: James B. Byers, Environmental Specialist, Federal Aviation Administration, Harrisburg Airports District Office, 3905 Hartzdale Drive, Suite 508, Camp Hill, PA 17011. Telephone (717) 730–2833.

SUPPLEMENTARY INFORMATION: The FAA, in cooperation with the City of Philadelphia Department of Aviation, will prepare an EIS for the proposed project. The EIS for the Capacity Enhancement Program will address a range of alternatives that would reduce existing and forecasted delays at PHL, including demand management alternatives and alternatives that are not within the jurisdiction of PHL or FAA, such as greater use of regional airports or other transportation modes. Within

this range, the alternatives being considered for the Capacity Enhancement Program are the No Build Alternative and two build alternatives developed in the Master Plan Update: the Parallel Concept and Diagonal Concept, both which increase airfield capacity at PHL. The EIS will also evaluate alternatives identified during the Scoping process that would reduce existing and forecasted delays at PHL. The Parallel Concept is an expansion of the existing runway configuration that would be completed in two phases. It involves extending two of the four existing runways and constructing a new runway, as well as other changes to make the airfield more efficient in this configuration and minor changes to gate facilities and around the existing terminal complex. The Diagonal Concept would also be phased and would ultimately provide four parallel runways in a northwest-southeast configuration that would be capable of supporting four independent arrival or departure streams in good weather conditions and two independent arrival streams plus two independent departure streams in poor weather conditions. The Diagonal Concept involves other changes to the airfield to accommodate the new configuration and ultimately, the construction of new centerfield terminals to replace the existing terminals.

The FAA intends to use the preparation of this EIS to comply with section 106 of the National Historic Preservation Act of 1966, as amended, and any other applicable laws having public involvement requirements. Comments addressing this issue should be addressed to the listed contact person.

The FAA intends to conduct a Scoping process to gather input from all interested parties to help identify any issues of concern associated with the proposed project. In additional to this notice, Federal, state, and local agencies, which have jurisdiction by law or have special expertise with respect to any potential environmental impacts associated with the proposed project, will be notified by letter of an Agency Scoping Meeting to be held on August 19, 2003 from 8:30 a.m. to 4 p.m. at the Airport Executive Offices of the Philadelphia International Airport in Terminal E in Philadelphia, Pennsylvania.

To notify the general public of the Scoping process, a legal notice will be placed in newspapers having general circulation in the project area describing the proposed project. The newspaper notice will notify the public that Scoping Meetings will be held to gain their input concerning the proposed project. The Public Scoping Meetings are scheduled for the evenings of August 18, 19, 20, 2003 from 5 p.m. to 9 p.m. at locations in the project area. The format of the meetings will be an open house with project information displayed and representatives from the FAA and the Airport available to answer questions. A formal presentation will be held at 6 p.m. and repeated at 8 p.m. written and oral comments will be accepted at each of the meetings. The public comment period on this initial Scoping phase of the EIS will end on September 3, 2003. The purpose of the Scoping Meetings is to receive input from the public and answer questions regarding the scope and process related to the EIS.

Issued in Jamaica, New York, July 21, 2003.

James White,

Acting Manager, Airports Division, Eastern Region.

[FR Doc. 03–19401 Filed 7–29–03; 8:45 am]

BILLING CODE 4910–13–M

DEPARTMENT OF TRANSPORTATION

Federal Aviation Administration

Standard Content and Format for the Installation Instructions and Limitations Required by TSO–C127a, Rotorcraft, Transport Airplane, and Normal and Utility Airplane Seating Systems

AGENCY: Federal Aviation Administration (FAA), DOT.

ACTION: Notice of availability and requests for public comments.

SUMMARY: This notice announces the availability of and request comments on a draft policy memorandum. The draft policy memorandum recommends a standardized content and format for the installation instructions and limitations required by Technical Standard Order (TSO)—C127a, Rotorcraft, Transport Airplane, and Normal and Utility Airplane Seating Systems.

DATES: All comments must be received on or before August 28, 2003.

ADDRESSES: Send all comments on the draft policy memorandum to: Federal Aviation Administration, Aircraft Certification Service, Room 815, 800 Independence Avenue, SW., Washington, DC 20591. ATTN: Mr. Hal Jensen, AIR–120. Or, deliver comments to: Federal Aviation Administration, Room 815, 800 Independence Avenue, SW., Washington, DC 20591.

FOR FURTHER INFORMATION CONTACT: Mr. Hal Jensen, Aerospace Engineer, Federal Aviation Administration, Aircraft Certification Service, Aircraft Engineering Division, Technical Programs Branch, AIR–120, Room 815, 800 Independence Avenue, SW., Washington, DC 20591; Telephone (202) 267–8807; fax: (202) 267–5340; e-mail *hal.jensen@faa.gov.*

SUPPLEMENTARY INFORMATION:

Comments Invited

Interested persons are invited to comment on the draft policy memorandum listed in this notice by submitting such written data, views, or arguments as they desire to the above specified address. Comments received on the draft policy memorandum may be examined, before and after the comment closing date, in Room 815, FAA Headquarters Building, 800 Independence Avenue, SW., Washington, DC 20591, weekdays except Federal holidays, between 8:30 a.m. and 4:30 p.m. All communications received on or before the closing date for comments specified above will be considered by the Director of the Aircraft Certification Service before issuing the final policy.

Background

In 2000, the FAA and industry formed a team to explore ways to streamline certifying airplane seats. Since that first effort the team developed a plan that included reestablishing the TSOs for seats as a valid design approval and to the extent possible, maximize their content toward meeting the applicable airworthiness standards. The team determined that using standardized installation instructions and limitations (IIL) for TSO–C127a will help when TSO holders provide complete IILs that clearly define issues about the TSO installation. When using an IIL, the person(s) approving the installation needs only to determine the installed TSO article is correct. The proposed policy also recommends the use of a standardized format designed to help the person(s) approving the installation to understand the instructions.

How To Obtain Copies

A copy of the draft policy memorandum may be obtained via the Internet at, *http://www.airweb.faa.gov/RGL,* or by contacting the person listed in the section titled **FOR FURTHER INFORMATION CONTACT.**

Issued in Washington, DC, on July 25, 2003.

David W. Hempe,

Manager, Aircraft Engineering Division, Aircraft Certification Service.

[FR Doc. 03–19409 Filed 7–29–03; 8:45 am]

BILLING CODE 4910–13–M

DEPARTMENT OF TRANSPORTATION

Federal Motor Carrier Safety Administration

[Docket Nos. FMCSA–98–4334, FMCSA–2000–7918, FMCSA–2001–9258, FMCSA–2001–9561]

Qualification of Drivers; Exemption Applications; Vision

AGENCY: Federal Motor Carrier Safety Administration (FMCSA), DOT.

ACTION: Notice of renewal of exemption; request for comments.

SUMMARY: This notice publishes the FMCSA decision to renew the exemptions from the vision requirement in the Federal Motor Carrier Safety Regulations for 24 individuals. The FMCSA has statutory authority to exempt individuals from vision standards if the exemptions granted will not compromise safety. The agency has concluded that granting these exemptions will provide a level of safety that will equal or exceed the level of safety maintained without the exemptions for these commercial motor vehicle (CMV) drivers.

DATES: This decision is effective August 8, 2003. Comments from interested persons should be submitted by August 29, 2003.

ADDRESSES: You may submit comments identified by DOT DMS Docket Numbers FMCSA–98–4334, FMCSA–2000–7918, FMCSA–2001–9258, and FMCSA–2001–9561 by any of the following methods:

- *Web Site: http://dms.dot.gov*. Follow the instructions for submitting comments on the DOT electronic docket site.
- *Fax:* 1–202–493–2251.
- *Mail:* Docket Management Facility; U.S. Department of Transportation, 400 Seventh Street, SW., Nassif Building, Room PL–401, Washington, DC 20590–0001.
- *Hand Delivery:* Room Pl–401 on the plaza level of the Nassif Building, 400 Seventh Street, SW., Washington, DC between 9 a.m. and 5 p.m/, Monday through Friday, except Federal Holidays.
- *Federal eRulemaking Portal:* Go to *http://www.regulations.gov.* Follow the on-line instructions for submitting comments.

Instructions: All submissions must include the agency name and docket numbers for this notice. For detailed instructions on submitting comments and additional information on the rulemaking process, *see* the Public Participation heading of the Supplementary Information section of this document. Note that all comments received will be posted without change to *http://dms.dot.gov*, including any personal information provided. Please see the Privacy Act heading under Regulatory Notices.

Docket: For access to the docket to read background documents or comments received, go to *http://dms.dot.gov* at any time or to Room PL–401 on the plaza level of the Nassif Building, 400 Seventh Street, SW., Washington, DC, between 9 a.m. and 5 p.m., Monday through Friday, except Federal Holidays.

FOR FURTHER INFORMATION CONTACT: Ms. Sandra Zywokarte, Office of Bus and Truck Standards and Operations, (202) 366–2987, FMCSA, Department of Transportation, 400 Seventh Street, SW., Washington, DC 20590–0001. Office hours are from 7:45 a.m. to 4:15 p.m., e.t., Monday through Friday, except Federal holidays.

SUPPLEMENTARY INFORMATION: *Public Participation:* The DMS is available 24 hours each day, 365 days each year. You can get electronic submission and retrieval help guidelines under the ''help'' section of the DMS web site. If you want us to notify you that we received your comments, please include a self-addressed, stamped envelope or postcard or print the acknowledgment page that appears after submitting comments on-line.

Privacy Act: Anyone is able to search the electronic form of all comments received into any of our dockets by the name of the individual submitting the comment (or signing the comment, if submitted on behalf of an association, business, labor union, *etc.*). You may review the Department of Transportation's complete Privacy Act Statement in the **Federal Register** published on April 11, 2000 (Volume 65, Number 70; Pages 19477–78) or you may visit *http://dms.dot.gov*.

Exemption Decision

Under 49 U.S.C. 31315 and 31136(e), the FMCSA may renew an exemption from the vision requirement in 49 CFR 391.41(b)(10), which applies to drivers of CMVs in interstate commerce, for a 2-year period if it finds ''such exemption would likely achieve a level of safety that is equivalent to, or greater than, the level that would be achieved absent such exemption.'' The procedures for requesting an exemption (including renewals) are set out in 49 CFR part 381. This notice addresses 24 individuals who have requested renewal of their exemptions in a timely manner. The FMCSA has evaluated these 24 applications for renewal on their merits and decided to extend each exemption for a renewable 2-year period. They are:

Roger D. Anderson
Joey E. Buice
Ronald D. Danberry
Paul W. Dawson
Lois E. De Souza
Tomie L. Estes
Jay E. Finney
Steven A. Garrity
Chester L. Gray
Waylon E. Hall
Larry M. Hawkins
Britt D. Hazelwood
Steve L. Hopkins
Jeffery M. Kimsey
Richard L. Leonard
Gerald L. Phelps, Jr.
Thomas G. Raymond
Tim M. Seavy
Kim L. Seibel
Randy D. Stanley
Lee T. Taylor
James M. Tayman, Sr.
Wesley E. Turner
John C. Young

These exemptions are extended subject to the following conditions: (1) That each individual have a physical exam every year (a) by an ophthalmologist or optometrist who attests that the vision in the better eye continues to meet the standard in 49 CFR 391.41(b)(10), and (b) by a medical examiner who attests that the individual is otherwise physically qualified under 49 CFR 391.41; (2) that each individual provide a copy of the ophthalmologist's or optometrist's report to the medical examiner at the time of the annual medical examination; and (3) that each individual provide a copy of the annual medical certification to the employer for retention in the driver's qualification file and retain a copy of the certification on his/her person while driving for presentation to a duly authorized Federal, State, or local enforcement official. Each exemption will be valid for 2 years unless rescinded earlier by the FMCSA. The exemption will be rescinded if: (1) The person fails to comply with the terms and conditions of the exemption; (2) the exemption has resulted in a lower level of safety than was maintained before it was granted; or (3) continuation of the exemption would not be consistent with the goals and objectives of 49 U.S.C. 31315 and 31136(e).

Basis for Renewing Exemptions

Under 49 U.S.C. 31315(b)(1), an exemption may be granted for no longer than 2 years from its approval date and may be renewed upon application for additional 2-year periods. In accordance with 49 U.S.C. 31315 and 31136(e), each

of the 24 applicants has satisfied the entry conditions for obtaining an exemption from the vision requirements (63 FR 66226, 64 FR 16517, 66 FR 41656, 65 FR 66286, 66 FR 13825, 66 FR 17743, 66 FR 33990, 66 FR 30502, 66 FR 41654). Each of these 24 applicants has requested timely renewal of the exemption and has submitted evidence showing that the vision in the better eye continues to meet the standard specified at 49 CFR 391.41(b)(10) and that the vision impairment is stable. In addition, a review of each record of safety while driving with the respective vision deficiencies over the past 2 years indicates each applicant continues to meet the vision exemption standards. These factors provide an adequate basis for predicting each driver's ability to continue to drive safely in interstate commerce. Therefore, the FMCSA concludes that extending the exemption for each renewal applicant for a period of 2 years is likely to achieve a level of safety equal to that existing without the exemption.

Comments

The FMCSA will review comments received at any time concerning a particular driver's safety record and determine if the continuation of the exemption is consistent with the requirements at 49 U.S.C. 31315 and 31136(e). However, the FMCSA requests that interested parties with specific data concerning the safety records of these drivers submit comments by August 29, 2003.

In the past the FMCSA has received comments from Advocates for Highway and Auto Safety (Advocates) expressing continued opposition to the FMCSA's procedures for renewing exemptions from the vision requirement in 49 CFR 391.41(b)(10). Specifically, Advocates object to the agency's extension of the exemptions without any opportunity for public comment prior to the decision to renew, and reliance on a summary statement of evidence to make its decision to extend the exemption of each driver.

The issues raised by Advocates were addressed at length in 66 FR 17994 (April 4, 2001). The FMCSA continues to find its exemption process appropriate to the statutory and regulatory requirements.

Issued on: July 24, 2003.

Pamela M. Pelcovits,

Acting Associate Administrator, Policy and Program Development.

[FR Doc. 03–19410 Filed 7–29–03; 8:45 am]

BILLING CODE 4910–EX–P

DEPARTMENT OF TRANSPORTATION

Research and Special Programs Administration

[Docket No. RSPA–03–14793; Notice No. 03–9]

Safety Advisory: Improper Marking of Compressed Gas Cylinders

AGENCY: Research and Special Programs Administration (RSPA), DOT.

ACTION: Safety advisory notice.

SUMMARY: This is to notify the public that we (''RSPA'') have obtained information concerning high-pressure compressed gas cylinders that appear to have been requalified improperly by Sooner Cylinder Service, Inc. (''Sooner''), 1032 SE 25th Street, Oklahoma City, OK 73129. Based on our review of Sooner's records, Sooner has marked, certified and returned to service an undetermined number of high-pressure DOT specification and exemption cylinders as having been being properly tested in accordance with the Hazardous Materials Regulations (HMR), when it appears that the cylinders were hydrostatically retested using equipment that was not verified to be accurate as required. In addition, it appears that some cylinders were marked, certified, and returned to service when they may have been required to be removed from service and condemned.

A hydrostatic retest and visual inspection, conducted as prescribed in the HMR, are used to verify the structural integrity of a cylinder. If the hydrostatic retest and visual inspection are not performed in accordance with the HMR, a cylinder with compromised structural integrity may be returned to service when it is required to be condemned. Extensive property damage, serious personal injury, or death may result from rupture of a cylinder. Cylinders that have not been retested in accordance with the HMR may not be charged or filled with compressed gas or other hazardous material and offered for transportation in commerce.

FOR FURTHER INFORMATION CONTACT: Billy C. Hines, Jr., Chief, Southwest Region, Office of Hazardous Materials Enforcement, Research and Special Programs Administration, U.S. Department of Transportation, 2320 La Branch Street, Room 2100, Houston, TX 77004. Telephone: (713) 718–3950, Fax: (713) 718–3952.

SUPPLEMENTARY INFORMATION: The Hazardous Materials Regulations (HMR), 49 CFR parts 171–180, prescribe requirements for the periodic retesting and requalification of cylinders used to transport compressed gases and acetylene. In order to perform hydrostatic retesting of compressed gas cylinders and visual inspections of acetylene cylinders, a person (including a company) must obtain an approval and Requalifier Identification Number (RIN) from RSPA. 49 CFR 180.205(b), 107.805. RSPA issued RIN C762 to Sooner on February 28, 1994, which was renewed on April 8, 1999, authorizing Sooner to requalify high-pressure cylinders and acetylene cylinders.

Based on our investigation, RSPA has concluded that, over the past three years, Sooner has marked, certified and returned to service an undetermined number of high-pressure cylinders as having been properly tested in accordance with the HMR when retesting was performed on test equipment that was not verified to be accurate as required. RSPA also suspects that Sooner may have returned to service cylinders that should have been condemned and the DOT specification or exemption marking removed or obliterated. The high-pressure cylinders in question are stamped with Sooner's RIN C762 in the following pattern:

C 7
M Y
26

M is the month of retest (*e.g.*, 01, 02, etc), and Y is the last two digits of the year of the retest (*e.g.*, 01, 02, 03).

All high-pressure cylinders that have been marked and certified as having been hydrostatically tested by Sooner since August 2000 may pose a safety risk to the public and should not be considered safe for use in hazardous materials service until retested by a DOT-authorized facility. This advisory notice does not include any DOT specification 8 or 8AL acetylene cylinders marked and certified by Sooner during this time period.

Anyone who has a high-pressure cylinder that has been hydrostatically tested by Sooner between August 2000 and July 2003, and has not had the cylinder tested by a DOT-authorized facility since then, should consider the cylinder unsafe and not fill it with a hazardous material unless the cylinder is first properly retested by a DOT-authorized retest facility. Cylinders described in this safety advisory that are filled with an atmospheric gas should be vented or otherwise safely discharged, and then taken to a DOT-authorized cylinder retest facility for proper retest to determine compliance with the HMR and their suitability for continuing service. Cylinders described in this

safety advisory that are filled with a material other than an atmospheric gas should not be vented, but instead should be safely discharged, and then taken to a DOT-authorized cylinder retest facility for proper retest to determine compliance with the HMR and their suitability for continuing service. Mr. Billy C. Hines, Jr., Chief, Southwest Region, can provide a list of authorized retest facilities in your area, or you may obtain the list at the following Web site: *http://hazmat.dot.gov.* Under no circumstance should a cylinder described in this safety advisory be filled, refilled or used for its intended purpose until it is reinspected and retested by a DOT-authorized retest facility.

RSPA requests that any person possessing a cylinder described in this safety advisory telephone or provide a facsimile to Mr. Hines with the following information for each cylinder: (1) The cylinder manufacturer's name, (2) the serial number of the cylinder, (3) the DOT specification or exemption information for the cylinder, and (4) the month and year of the last marked retest by Sooner Cylinder Service, Inc.

Issued in Washington, DC on July 24, 2003.

Robert A. McGuire,

Associate Administrator for Hazardous Materials Safety.

[FR Doc. 03–19371 Filed 7–29–03; 8:45 am]

BILLING CODE 4910–60–P

DEPARTMENT OF TRANSPORTATION

Surface Transportation Board

[STB Docket No. AB–57 (Sub–No. 53X)]

Soo Line Railroad Company—Abandonment Exemption—in Racine County, WI

Soo Line Railroad Company (Soo) has filed a notice of exemption under 49 CFR 1152 subpart F—*Exempt Abandonments and Discontinuances of Service and Trackage Rights* to abandon approximately 7.5 miles of its line of railroad between milepost 18.43±(near Kansasville) and milepost 25.93±(in Burlington), in Racine County, WI. The line traverses United States Postal Service Zip Codes 53139 and 53105.

Soo has certified that: (1) No local traffic has moved over the line for at least 2 years; (2) all overhead traffic has been rerouted over other lines; (3) no formal complaint filed by a user of rail service on the line (or by a state or local government entity acting on behalf of such user) regarding cessation of service over the line either is pending with the Surface Transportation Board (Board) or with any U.S. District Court or has been decided in favor of complainant within the 2-year period; and (4) the requirements at 49 CFR 1105.7 (environmental reports), 49 CFR 1105.8 (historic reports), 49 CFR 1105.12 (newspaper publication), and 49 CFR 1152.50(d)(1) (notice to governmental agencies) have been met.

As a condition to this exemption, any employee adversely affected by the abandonment shall be protected under *Oregon Short Line R. Co.—Abandonment—Goshen,* 360 I.C.C. 91 (1979). To address whether this condition adequately protects affected employees, a petition for partial revocation under 49 U.S.C. 10502(d) must be filed. Provided no formal expression of intent to file an offer of financial assistance (OFA) has been received, this exemption will be effective on August 29, 2003, unless stayed pending reconsideration. Petitions to stay that do not involve environmental issues,[1] formal expressions of intent to file an OFA under 49 CFR 1152.27(c)(2),[2] and trail use/rail banking requests under 49 CFR 1152.29 must be filed by August 11, 2003. Petitions to reopen or requests for public use conditions under 49 CFR 1152.28 must be filed by August 19, 2003, with the Surface Transportation Board, 1925 K Street, NW., Washington, DC 20423–0001.

A copy of any petition filed with the Board should be sent to Soo's representative: Diane P. Gerth, Esq., Leonard, Street and Deinard Professional Association, 150 South Fifth St., Suite 2300, Minneapolis, MN 55402.

If the verified notice contains false or misleading information, the exemption is void *ab initio.*

Soo has filed an environmental report which addresses the abandonment's effects, if any, on the environment and historic resources. SEA will issue an environmental assessment (EA) by August 4, 2003. Interested persons may obtain a copy of the EA by writing to SEA (Room 500, Surface Transportation Board, Washington, DC 20423–0001) or by calling SEA, at (202) 565–1539. [Assistance for the hearing impaired is available through the Federal Information Relay Service (FIRS) at 1–800–877–8339.] Comments on environmental and historic preservation matters must be filed within 15 days after the EA becomes available to the public.

Environmental, historic preservation, public use, or trail use/rail banking conditions will be imposed, where appropriate, in a subsequent decision.

Pursuant to the provisions of 49 CFR 1152.29(e)(2), Soo shall file a notice of consummation with the Board to signify that it has exercised the authority granted and fully abandoned the line. If consummation has not been effected by Soo's filing of a notice of consummation by July 30, 2004, and there are no legal or regulatory barriers to consummation, the authority to abandon will automatically expire.

Board decisions and notices are available on our Web site at: *http://www.stb.dot.gov.*

Decided: July 23, 2003.

By the Board, David M. Konschnik, Director, Office of Proceedings.

Vernon A. Williams,

Secretary.

[FR Doc. 03–19332 Filed 7–29–03; 8:45 am]

BILLING CODE 4915–00–P

[1] The Board will grant a stay if an informed decision on environmental issues (whether raised by a party or by the Board's Section of Environmental Analysis (SEA) in its independent investigation) cannot be made before the exemption's effective date. *See Exemption of Out-of-Service Rail Lines,* 5 I.C.C.2d 377 (1989). Any request for a stay should be filed as soon as possible so that the Board may take appropriate action before the exemption's effective date.

[2] Each OFA must be accompanied by the filing fee, which currently is set at $1,100. *See* 49 CFR 1002.2(f)(25).

DEPARTMENT OF THE TREASURY

Submission for OMB Review; Comment Request

July 17, 2003.

The Department of the Treasury has submitted the following public information collection requirement(s) to OMB for review and clearance under the Paperwork Reduction Act of 1995, Pub. L. 104–13. Copies of the submission(s) may be obtained by calling the Treasury Bureau Clearance Officer listed. Comments regarding this information collection should be addressed to the OMB reviewer listed and to the Treasury Department Clearance Officer, Department of the Treasury, Room 11000, 1750 Pennsylvania Avenue, NW., Washington, DC 20220.

Dates: Written comments should be received on or before August 29, 2003 to be assured of consideration.

Internal Revenue Service (IRS)

OMB Number: 1545–0228.

Form Number: IRS Form 6252.

Type of Review: Extension.

Title: Installment Sale Income.

Description: Information is needed to figure and report an installment sale for a casual or incidental sale of personal property, and a sale of real property by

someone not in the business of selling real estate. Data is used to determine whether the installment sale has been properly reported and the correct amount of profit is included in income on the taxpayer's return.

Respondents: Business or other for-profit, individuals or households, not-for-profit institutions, Farms.

Estimated Number of Respondents/Recordkeepers: 782,848.

Estimated Burden Hours Per Respondent/Recordkeeper:

Recordkeeping—1 hr., 18 min.
Learning about the law or the form—24 min.
Preparing the form—1 hr., 0 min.
Copying, assembling, and sending the form to the IRS—20 min.

Frequency of Response: Annually.

Estimated Total Reporting/Recordkeeping Burden: 2,395,515 hours.

OMB Number: 1545–1826.

Form Number: IRS Form 8876.

Type of Review: Extension.

Title: Excise Tax on Structured Settlement Factoring Transactions.

Description: Form 8876 is used to report structured settlement transactions and pay the applicable excise tax.

Respondents: Business or other for-profit, Individuals or households.

Estimated Number of Respondents/Recordkeepers: 100.

Estimated Burden Hours Per Respondent/Recordkeeper:

Recordkeeping—3 hr., 6 min.
Learning about the law or the form—1 hr., 12 min.
Preparing and sending the form to the IRS—1 hr., 17 min.

Frequency of Response: On occasion.

Estimated Total Reporting/Recordkeeping Burden: 560 hours.

OMB Number: 1545–1833.

Revenue Procedure Number: Revenue Procedure 2003–37.

Type of Review: Extension.

Title: Documentation Provisions for Certain Taxpayers Using the Fair Market Value Method of Interest Expense Apportionment.

Description: Revenue Procedure 2003–37 describes documentation and information a taxpayer that uses the fair market value method of apportionment of interest expense may prepare and make available to the Service upon request in order to establish the fair market value of the taxpayer's assets to the satisfaction of the Commissioner as required by section 1.861–9T(g)(1)(iii). It also sets forth the procedures to be followed in the case of elections to use the fair market value method.

Respondents: Business or other for-profit.

Estimated Number of Respondents/Recordkeepers: 125.

Estimated Burden Hours Per Respondent/Recordkeeper: 5 hours.

Frequency of Response: On occasion.

Estimated Total Reporting/Recordkeeping Burden: 625 hours.

OMB Number: 1545–1834.

Revenue Procedure Number: Revenue Procedure 2003–39.

Type of Review: Extension.

Title: Section 1031 LKE (Like-Kind Exchanges) Auto Leasing Programs.

Description: Revenue Procedure 2003–39 provides safe harbors for certain aspects of the qualification under section 1031 of certain exchanges of property pursuant to LKE Programs for federal income tax purposes.

Respondents: Business or other for-profit.

Estimated Number of Respondents: 8,600.

Estimated Burden Hours Per Respondent: 1 hour.

Frequency of Response: On occasion.

Estimated Total Reporting Burden: 8,600 hours.

Clearance Officer: Glenn Kirkland, (202) 622–3428, Internal Revenue Service, Room 6411–03, 1111 Constitution Avenue, NW., Washington, DC 20224.

OMB Reviewer: Joseph F. Lackey, Jr., (202) 395–7316, Office of Management and Budget, Room 10235, New Executive Office Building, Washington, DC 20503.

Mary A. Able,

Departmental Reports Management Officer.

[FR Doc. 03–19288 Filed 7–29–03; 8:45 am]

BILLING CODE 4830–01–P

DEPARTMENT OF THE TREASURY

Internal Revenue Service

Quarterly Publication of Individuals, Who Have Chosen To Expatriate, as Required by Section 6039G

AGENCY: Internal Revenue Service (IRS), Treasury.

ACTION: Notice.

SUMMARY: This notice is provided in accordance with IRC section 6039G, as amended, by the Health Insurance Portability and Accountability Act (HIPPA) of 1996. This listing contains the name of each individual losing United States citizenship (within the meaning of section 877(a)) with respect to whom the Secretary received information during the quarter ending June 30, 2003.

Abegunde, Sunday Felix
Agusta, Corrado Claudio
Albury, Mary
Allison, Kevin Andrew
Andersen, Mary Ann
Angelicoussis, Maria
Ballard, Archibald Curtis
Barkema, Murray Richard
Barrios, Mali Miyashita-Trece
Barsamian, Lucy George
Basombrio, Miguel Angel Manuel
Becsey, Nadja Katerina
Beker, April Thomas
Beldi, Mario Aldo
Bergic, Doris Leonore
Birchard, Ronald William Thomas
Blackwood, Graeme C
Bogen, Linda Astrid
Bonnet, Christilla Marie
Bonney, Young Suk
Bonte-Friedheim, Michael Fritz Herbert
Boone, Geoffrey Lynn
Brandt, Tatyana Victoria
Brathen, Helen Elaine
Briquet, Beatrice Norton
Broman, David Nathanael
Bry, Daniela Lang
Burrows, Susan Teresa
Carr-Harris, Marianna Catherine
Castiglioni, Anthony Peter
Castiglioni, Attila Imre
Chan, Daisy Fook May
Charles, Elmore
Chen, William
Chen, Daisy
Chi, Patrick
Chiang, Peng-Kuen
Christensen, Allan Conrad
Christensen, Erik J
Christiano, Eugene Richard
Coulter, Gertraud
Cressman, Jerry Ann
Cronrath, Wolfgang Ernst
Dahinden, Max Christoph
Dale, Amy Lee
De Coninck Bigbie, John Eric
De Hoog, Gertruida J
De Hoog, Jan
De La Valette, Michael Parisot
De Rham, Christophe Bernard Olivier
de Seze, Amelie
Deichmann, Nicholas Carl
Devi, Lila Smaranam
Ding, Jian
Dohmen, Martina
Dorrance IV, John Thompson
Du Preez, Cecilia Karin Margareta
Edis, Jamie Edward
Edwards, Benjamin Franklin
Evans Jr., Charles Lee
Fabricant, Arthur E
Feldman, Jerome Edwin
Fretwell, Stanley Cecil
Fretwell, Carol Janeen
Fries, Marianne Ursula
Froelicher, Martin Andreas Otto
Fure, Kari-Ann Hatch
Georgulas, Nikos
Gering, Claudia Annamarie Elizabeth
Gomez, Eduardo X
Goodwin, Deann Marie
Guibert, Florence Gabrielle
Hagemann, Peter Hans

Hahl, Cindy Maria
Halvorson, David Travis
Hammel, Nilguen Sabiha
Hayes, Mari
Hediger, Margrit
Herrle, Klaus
Hickman, Jeanette Yvonne
Hofmann, Suzel De Jean
Holowesko, Stephen Geoffrey
Hosking, John Geir
Hussey, Marc J
Hyde, Diana W
Hyde, Geoffrey L
Illner, Walter
Islar, Roland Roger
Jaecklin, Stefan Andri
Jen-Tung Liu, James Alexander
Jeong, Munjae
Jobes, Carmen M.
Johnson, Joyce Marie
Jung, Young Hwa
Justesen, Abigail Esther
Karlsson, Mikael Marlies
Keller, George Andreas
Kerr, Eldon John
Kilmurry, Kathleen Joan
Kirschenbaum, Lester
Kline, Geoffrey Murdoch
Korff, Tawyna Lynn
Krag, Stephen Rosenstjerne
Kristensen, Elizabeth Edna Suzuki
Kusenbach, Patricia Ann
La Bagh, Damion Vincent
Lamotte, Mattias Ivan
Landen, Serge Max
Langoux, Camillia Marie Olivia
Lazzara, John
Levin II, Eric John
Lewis, Christopher Gene
Licht, Jeffrey Nicholas
Lindberg, Ronald Charles
Liu, Jialin
Luckett, Dwight Harreld
Luckyn-Malone, Phoebe Elizabeth Laura
Manosso, Marcos
Manousek, Claudia E
Manousek, Wolfgang
Markoulis, Jon Angelo
Martin, Caroline Genevieve
Mattson, Sara Maria
Maynard, Michael Sven
McCarthy, Erin Moira
McIver, Robert David Fraser
McCarville, Dennis Charles
McGraw Swearinger, Andrew
McKnight, Vanessa Patrice
Melzer, Marc Lawrence
Menuhin, Jeremy Louis Eugene
Meyer, Fredrik Carsten
Mileski, Stephen William
Miller, Martina Charlotte
Miller Jr., Thomas Denelle
Mitchell, Aaron Ferderal
Moltedo, Gabriele Corto
Monime, Armand
Moore, Sheila Sarah
Muller, Barbara Betty
Nagant de Deuxchaisnes, Didier C.
Nash, Kenneth H
Nash, Helen M
Neumann, David Michael
Newton, Warren Arthur
O'Reilly, Kevin Joseph
Ortiz, Marco A
Paek(nee Choi), Jung Sook
Pascoe, Ricardo Andres
Pedrazzini, Jean Pierre
Peterson, Arvid Curt
Phipps(nee Sternberg), Diana Frances
Piemontese, David Stefano
Poon, Stella Fong-Man
Poujol, Irene Florence
Pracht, Elizabeth Anne
Price, Nathaniel Clayton
Rechucher, George E
Reed, Sandra Shaw
Reinsurance Limited, Imagine International
Riggs, Marlene Sonja
Riscanu, Dragos
Ritter, Robert
Rix, Petra Simon
Rothbarth, Eric Walter
Roudette, Tanya Solina
Rutledge, Robert Frank
Saari, Thor
Saint-Brisson de Araujo Castro, Luiz Augusto
Schlaich, Michael Jon
Searcy, Carren Reyene Margarete
Segal, Erich Wolf
Sevini, Perla Bruna
Smith, Sydney Lanier
Spieler, Penelope
Stensrod, Solveig Berg
Straub, Helga Erika
Striker, Edward Franklin
Sturge, Joan Claire
Suchet, Bonnie Lee
Sweet, Astri Ingrid
Takao, Sunao
Thomas, James Lewis
Trejos, Emilia Maria
Turner, Walter Vernon
Turner, James Allen
Van Bruggen, Ariena H. C.
Van Der Pers-King, Bonnie M
Van Veen, Astrid Renata
Varne, Lloyd
Vea Gabrielsen, Ingrid Marie
Velay, Valentine
Viermetz, Kurt F
Watt, David Forbes
Watt Jr., David Stanley
Wendlandt, Gerhart Stephan
Wenzel, Celine Neumann
Whiteleather, Gerald Kerr
Wieler, Aram Tobias
Wilkinson, Barbara Elizabeth
Wilkinson, Thomas Patrick
Williams, Diana Kathryn
Williams, Ariadne Noel
Young, Christopher Joseph
Yu, Jun Okuyama
Zane 3rd, Lewis Earl
Zimmerman, Rita Charlotte
Zimmerman, John Ernest
Zimmerman, Fiona Diane

Dated: July 21, 2003.

Tracy Harmon,

Acting Team Manager—Examination Operation, Philadelphia Compliance Services.

[FR Doc. 03–19368 Filed 7–29–03; 8:45 am]

BILLING CODE 4830–01–P

DEPARTMENT OF THE TREASURY

Internal Revenue Service

Open Meeting of the Taxpayer Advocacy Panel Earned Income Tax Credit Issue Committee

AGENCY: Internal Revenue Service (IRS) Treasury.

ACTION: Notice.

SUMMARY: An open meeting of the Taxpayer Advocacy Panel Earned Income Tax Credit issue committee will be conducted in Atlanta, Georgia to discuss various IRS issues. The public is invited to make oral comments.

DATES: The meeting will be held Wednesday, August 27, 2003.

FOR FURTHER INFORMATION CONTACT: Mrs. Marisa Knispel at telephone number 888–912–1227 (toll-free), or 718–488–3557 (non toll-free).

SUPPLEMENTARY INFORMATION: Notice is hereby given pursuant to Section 10(a)(2) of the Federal Advisory Committee Act, 5 U.S.C. App. (1988) that an open meeting of the Taxpayer Advocacy Panel Earned Income Tax Credit Issue Committee will be held Wednesday, August 27, 2003 from 1 p.m. to 4 p.m. EDT in Atlanta, GA. The public is invited to make oral comments. Individual comments will be limited to 5 minutes. Notification of intent to attend the meeting must be made with Marisa Knispel. Mrs. Knispel may be reached at telephone number 888–912–1227 or 718–488–3557, or, write Marisa Knispel at; TAP Office, 10 MetroTech Center, 625 Fulton Street, Brooklyn, NY 11201, or post your comments to the Web site: *http://www.improveirs.org.*

The agenda will include the following: Various IRS issues.

Dated: July 25, 2003.

Deryle J. Temple,

Director, Taxpayer Advocacy Panel.

[FR Doc. 03–19411 Filed 7–29–03; 8:45 am]

BILLING CODE 4830–01–P

DEPARTMENT OF THE TREASURY

Internal Revenue Service

Open Meeting of the Small Business/Self Employed—Schedule C Non-Filers Committee of the Taxpayer Advocacy Panel

AGENCY: Internal Revenue Service (IRS) Treasury.

ACTION: Notice.

SUMMARY: An open meeting of the Small Business/Self Employed—Schedule C Non-Filers Committee of the Taxpayer Advocacy Panel will be conducted (via teleconference). The TAP will be discussing issues pertaining to increasing compliance and lessoning the burden for Small Business/Self Employed individuals. Recommendations for IRS systemic changes will be developed.

DATES: The meeting will be held Tuesday, August 19, 2003.

FOR FURTHER INFORMATION CONTACT: Mary O'Brien at 1–888–912–1227, or 206–220–6096.

SUPPLEMENTARY INFORMATION: Notice is hereby given pursuant to Section 10(a)(2) of the Federal Advisory Committee Act, 5 U.S.C. App. (1988) that an open meeting of the Small Business/Self Employed—Schedule C Non-Filers Committee of the Taxpayer Advocacy Panel will be held Tuesday, August 19, 2003 from 11 a.m. EST to 12:30 p.m. EST via a telephone conference call. The public is invited to make oral comments. Individual comments will be limited to 5 minutes. If you would like to have the TAP consider a written statement, please call 1–888–912–1227 or 206–220–6096, or write to Mary O'Brien, TAP Office, 915 2nd Avenue, MS W–406, Seattle, WA 98174. Due to limited conference lines, notification of intent to participate in the telephone conference call meeting must be made with Mary O'Brien. Ms O'Brien can be reached at 1–888–912–1227 or 206–220–6096.

The agenda will include the following: Various IRS issues.

Dated: July 25, 2003.

Deryle J. Temple,

Director, Taxpayer Advocacy Panel.

[FR Doc. 03–19413 Filed 7–29–03; 8:45 am]

BILLING CODE 4830–01–P

DEPARTMENT OF THE TREASURY

Internal Revenue Service

Open Meeting of the Area 7 Taxpayer Advocacy Panel (Including the State of California)

AGENCY: Internal Revenue Service (IRS), Treasury.

ACTION: Notice.

SUMMARY: An open meeting of the Area 7 Taxpayer Advocacy Panel will be conducted (via teleconference). The Taxpayer Advocacy Panel (TAP) is soliciting public comments, ideas, and suggestions on improving customer service at the Internal Revenue Service. The TAP will use citizen input to make recommendations to the Internal Revenue Service.

DATES: The meeting will be held Monday, August 18, 2003.

FOR FURTHER INFORMATION CONTACT: Mary Peterson O'Brien at 1–888–912–1227 or 206–220–6098.

SUPPLEMENTARY INFORMATION: Notice is hereby given pursuant to section 10(a)(2) of the Federal Advisory Committee Act, 5 U.S.C. App. (1988), that an open meeting of the Area 7 Taxpayer Advocacy Panel will be held Monday, August 18, 2003, from 8 a.m. Pacific time to 9 a.m. Pacific time via a telephone conference call. The public is invited to make oral comments. Individual comments will be limited to 5 minutes. If you would like to have the TAP consider a written statement, please call 1–888–912–1227 or 206–220–6098, or write to Mary Peterson O'Brien, TAP Office, 915 2nd Avenue, MS W–406, Seattle, WA 98174. Due to limited conference lines, notification of intent to participate in the telephone conference call meeting must be made with Mary Peterson O'Brien. Ms. O'Brien can be reached at 1–888–912–1227 or 206–220–6098.

The agenda will include the following: Various IRS issues.

Dated: July 25, 2003.

Deryle J. Temple,

Director, Taxpayer Advocacy Panel.

[FR Doc. 03–19416 Filed 7–29–03; 8:45 am]

BILLING CODE 4830–01–M

DEPARTMENT OF THE TREASURY

Internal Revenue Service

Open Meeting of the Area 3 Taxpayer Advocacy Panel (Including the States of Florida, Georgia, Alabama, Mississippi, Louisiana, Arkansas, and Tennessee)

AGENCY: Internal Revenue Service (IRS), Treasury.

ACTION: Notice.

SUMMARY: An open meeting of the Area 3 Taxpayer Advocacy Panel will be conducted (via teleconference). The Taxpayer Advocacy Panel is soliciting public comments, ideas, and suggestions on improving customer service at the Internal Revenue Service.

DATES: The meeting will be held Friday, August 22, 2003, from 11 a.m. e.d.t. to 12:30 p.m. e.d.t.

FOR FURTHER INFORMATION CONTACT: Sallie Chavez at 1–888–912–1227 or 954–423–7979.

SUPPLEMENTARY INFORMATION: Notice is hereby given pursuant to section 10(a)(2) of the Federal Advisory Committee Act, 5 U.S.C. App. (1988), that an open meeting of the Area 3 Taxpayer Advocacy Panel will be held Friday, August 22, 2003, from 11 a.m. e.s.t. to 12:30 p.m. e.s.t. via a telephone conference call. Individual comments will be limited to 5 minutes. If you would like to have the TAP consider a written statement, please call 1–888–912–1227 or 954–423–7979, or write Sallie Chavez, TAP Office, 1000 South Pine Island Rd., Suite 340, Plantation, FL 33324. Due to limited conference lines, notification of intent to participate in the telephone conference call meeting must be made with Sallie Chavez. Ms. Chavez can be reached at 1–888–912–1227 or 954–423–7979. The agenda will include the following: various IRS issues.

Dated: July 25, 2003.

Deryle J. Temple,

Director, Taxpayer Advocacy Panel.

[FR Doc. 03–19418 Filed 7–29–03; 8:45 am]

BILLING CODE 4830–01–P

Federal Register

Wednesday,
July 30, 2003

Part II

Department of Housing and Urban Development

24 CFR Part 200
Distribution of Tax Credit Proceeds; Interim Rule

DEPARTMENT OF HOUSING AND URBAN DEVELOPMENT

24 CFR Part 200

[Docket No. FR–4792–I–01]

RIN 2502–AH91

Distribution of Tax Credit Proceeds

AGENCY: Office of the Assistant Secretary for Housing-Federal Housing Commissioner, HUD.

ACTION: Interim rule.

SUMMARY: This interim rule amends the Department's regulations with respect to funding for project completion. The current regulations require that funds provided by the mortgagor must be disbursed in full for project work, material, and incidental charges and expenses before any disbursement of the mortgage proceeds. An exception is made for federal, state, or local government or instrumentality grants or loans. These grants or loans need not be fully disbursed before the disbursement of mortgage proceeds, upon approval of the Assistant Secretary for Housing-Federal Housing Commissioner. This interim rule adds to the exception. This rule provides that the mortgagor's equity from the sale of low-income housing tax credits or historic tax credits, or both, need not be fully disbursed before the distribution of mortgage proceeds.

DATES: *Effective date:* August 29, 2003.

Comment Due Date: September 29, 2003.

ADDRESSES: Interested persons are invited to submit comments regarding this rule to the Regulations Division, Office of General Counsel, Room 10276, Department of Housing and Urban Development, 451 Seventh Street, SW., Washington, DC 20410–0500. Communications should refer to the above docket number and title. Facsimile (Fax) comments are not acceptable. A copy of each communication submitted will be available for public inspection and copying between 7:30 a.m. and 5:30 p.m. weekdays at the above address.

FOR FURTHER INFORMATION CONTACT: Michael McCullough, Director, Office of Multifamily Development, Office of the Deputy Assistant Secretary for Multifamily Housing, Room 6148, Department of Housing and Urban Development, 451 Seventh Street, SW., Washington, DC 20410–8000. Telephone (202) 708–1142, ext. 5426 (this is not a toll-free number). Hearing- or speech-impaired persons may access this number by calling the Federal Information Relay Service at 1–800–877–8339 (this is a toll-free number).

SUPPLEMENTARY INFORMATION:

I. Background

The Department's regulations at 24 CFR 200.54 describe the project funding completion requirements with respect to FHA insured multifamily projects. Paragraph (a) of § 200.54 states that funds provided by the mortgagor must be disbursed in full for project work, material, and incidental charges and expenses before disbursement of any mortgage proceeds. The existing regulations at § 200.54(b) provide that, with the approval of the Assistant Secretary for Housing-Federal Housing Commissioner, funds provided by a grant or loan to the mortgagor from a governmental agency do not have to be fully disbursed to complete a project before disbursement of the mortgage proceeds. A grant or loan from a federal agency does not include the proceeds from the sale of low-income housing tax credits or historic tax credits. Historic tax credit proceeds are generated from the financing of the preservation of historic properties that receive special tax treatment under the Internal Revenue Code. Syndication involves sale of historic properties to investors who share in the tax benefits that accrue to each investor in proportion to his/her investment in the property. The investors' cash investment is used to fund the preservation costs (*i.e.*, the cost of rehabilitating an historic property).

Tax credits are usually syndicated and sold to investors. The proceeds from the sale of low-income housing tax credits often amount to between forty and fifty percent of the cost of construction of the project. Because of the large amount of equity resulting in a substantially reduced mortgage, rents can be fixed at levels that may make them affordable to very low-income families. Historic tax credits are given for up to twenty percent of the cost of rehabilitation of a qualified historic building, thus encouraging the rehabilitation and preservation of historic buildings.

Investors in Ginnie Mae securities anticipate a date certain for initial distribution of mortgage proceeds. If the mortgagor's equity is substantial and it must be fully distributed before distribution of mortgage proceeds, as is currently required, then the distribution of mortgage proceeds will not begin until months after the date of closing. With delayed distribution of mortgage proceeds, the borrower would have to pay extension fees to the Ginnie Mae investor. These extension fees can be expensive. By allowing the pro-rata distribution of the required borrower equity and of the mortgage proceeds, this rule helps to meet the Secretary's goal of simplifying the use of tax credits with the FHA mortgage insurance programs.

To mitigate the effects of the delayed distribution of mortgage proceeds, the Assistant Secretary for Housing has issued over a dozen waivers this year to permit the pro-rata distribution of tax credits equity and the FHA mortgage insurance proceeds. The availability of funds for completion of the project is assured because the borrower equity, including tax credit proceeds, and the FHA mortgage proceeds, are placed into the lender's escrow account from which advances of the mortgage proceeds may be made only with the approval of the Multifamily Hub or Multifamily Program Center. If the borrower defaults and the lender files a claim for insurance benefits, all funds remaining in the lender's escrow are used to offset the claim.

II. This Interim Rule

This interim rule would amend 24 CFR 200.54(b) to allow the proceeds from syndication of low-income housing tax credits and historic tax credits to be treated in the same manner as loan or grant funding provided through federal, state, or local government agencies. This amendment eliminates the need for a waiver of the regulation as obtained in the past, thereby eliminating the additional cost to the project resulting from the delays associated with receiving a waiver of the regulation. As amended, § 200.54(b) reads as follows:

(b) Low-income housing tax credit syndication proceeds, historic tax credit syndication proceeds, or funds provided by a grant or loan from a federal, state, or local governmental agency or instrumentality under requirements of this section need not be fully disbursed before the disbursement of mortgage proceeds, where approved by the Commissioner in accordance with terms, conditions, and standards established by the Commissioner.

III. Findings and Certifications

Justification for Interim Rulemaking

In general, HUD publishes a rule for public comment before issuing a rule for effect, in accordance with its own regulations on rulemaking at 24 CFR part 10. Part 10, however, does provide for exceptions from that general rule where HUD finds good cause to omit advance notice and public participation. The good cause requirement is satisfied when the prior public procedure is ''impracticable, unnecessary, or contrary to the public interest'' (24 CFR part 10).

HUD finds that good cause exists to publish this interim rule for effect without first soliciting public comment, in that prior public procedure is contrary to the public interest. The reason for HUD's determination is that this rule eliminates the need for projects funded with tax credits to seek a waiver from HUD to allow mortgage proceeds to be disbursed before the distribution of the mortgagor's equity from the sale of low-income housing tax credits or historic tax credits. This change will result in savings in time and money for projects funded with tax credits, thereby making rents more affordable in these projects.

Executive Order 12866, Regulatory Planning and Review

The Office of Management and Budget (OMB) reviewed this rule under Executive Order 12866 (entitled ''Regulatory Planning and Review''). OMB determined that this rule is a ''significant regulatory action'' as defined in section (3)(f) of the Order (although not an economically significant regulatory action under the Order). Any changes made to this rule as a result of that review are identified in the docket file, which is available for public inspection in the Regulations Division, Room 10276, 451 Seventh Street, SW., Washington, DC 20410–0500.

Environmental Review

A Finding of No Significant Impact with respect to the environment for this rule has been made in accordance with HUD regulations at 24 CFR part 50, which implement section 102(2)(C) of the National Environmental Policy Act of 1969. The Finding of No Significant Impact is available for public inspection between 7:30 a.m. and 5:30 p.m. weekdays in the office of the Rules Docket Clerk, Office of the General Counsel, Department of Housing and Urban Development, Room 10276, 451 Seventh Street, SW., Washington, DC 20410–0500.

Unfunded Mandates Reform Act

The Unfunded Mandates Reform Act of 1995 (2 U.S.C. 1531–1538) establishes requirements for federal agencies to assess the effects of their regulatory actions on state, local, and tribal governments and the private sector. This interim rule does not impose a federal mandate that will result in expenditure by state, local, or tribal governments, within the meaning of the Unfunded Mandates Reform Act of 1995.

Regulatory Flexibility Act

The Secretary, in accordance with the Regulatory Flexibility Act (5 U.S.C. 605(b)), has reviewed this rule before publication and by approving it certifies that this rule does not have a significant economic impact on a substantial number of small entities. There are no anti-competitive discriminatory aspects of the rule with regard to small entities, and there are no unusual procedures that would need to be complied with by small entities. Although HUD has determined that this interim rule will not have a significant economic impact on a substantial number of small entities, HUD welcomes comments regarding any less burdensome alternatives to this rule that will meet HUD's objectives as described in this preamble.

Executive Order 13132, Federalism

Executive Order 13132 (entitled ''Federalism'') prohibits an agency from publishing any rule that has federalism implications if the rule either imposes substantial direct compliance costs on state and local governments and is not required by statute, or the rule preempts state law, unless the agency meets the consultation and funding requirements of section 6 of the Order. This interim rule does not have federalism implications and will not impose substantial direct compliance costs on state and local governments nor preempt state law within the meaning of the Order.

Catalog of Federal Domestic Assistance

The Catalog of Federal Domestic Assistance numbers for 24 CFR part 200 are 14.135 and 14.139.

List of Subjects in 24 CFR Part 200

Administrative practice and procedure, Claims, Equal employment opportunity, Fair housing, Housing standards, Lead poisoning, Loan programs-housing and community development, Manufactured homes, Mortgage insurance, Reporting and recordkeeping requirements.

■ Accordingly, for the reasons described in the preamble, HUD amends 24 CFR part 200 to read as follows:

PART 200—INTRODUCTION TO FHA PROGRAMS

■ 1. The authority citation for 24 CFR part 200 continues to read as follows:

Authority: 12 U.S.C. 1702–1715z–21; 42 U.S.C. 3535 (d).

■ 2. Amend § 200.54 by revising paragraph (b) to read as follows:

§ 200.54 Project completion funding.

* * * * *

(b) Low-income housing tax credit syndication proceeds, historic tax credit syndication proceeds, or funds provided by a grant or loan from a federal, state, or local governmental agency or instrumentality under requirements of this section need not be fully disbursed before the disbursement of mortgage proceeds, where approved by the Commissioner in accordance with terms, conditions, and standards established by the Commissioner.

Dated: June 30, 2003.

John C. Weicher,

Assistant Secretary for Housing-Federal Housing Commissioner.

[FR Doc. 03–19286 Filed 7–29–03; 8:45 am]

BILLING CODE 4210–27–P

Federal Register

Wednesday,
July 30, 2003

Part III

The President

Proclamation 7693—Parents' Day, 2003

Executive Order 13309—Amendments to Executive Order 12994, and Renaming the President's Committee on Mental Retardation as the President's Committee for People with Intellectual Disabilities

Executive Order 13310—Blocking Property of the Government of Burma and Prohibiting Certain Transactions

Federal Register
Vol. 68, No. 146
Wednesday, July 30, 2003

Presidential Documents

Title 3—

The President

Proclamation 7693 of July 25, 2003

Parents' Day, 2003

By the President of the United States of America

A Proclamation

Children are a daily reminder of the blessings and responsibilities of life and a source of joy, pride, and fulfillment. Parents, stepparents, adoptive parents, and foster parents have the important responsibility of providing for, protecting, nurturing, teaching, and loving their children. On Parents' Day, we honor America's mothers and fathers and celebrate the values that bind families from one generation to the next and help define us as a Nation.

As a child's first teachers, parents are the most influential and effective instructors in a child's life. Through their words, actions, and sacrifices, parents are living examples for children. Young boys and girls watch their parents closely and imitate their behavior. Parents play a critical role in instilling responsibility, integrity, and other life lessons that shape the lives of America's future leaders.

My Administration is committed to supporting our Nation's families. We are working with faith-based and community organizations to promote healthy marriages, responsible parenting, and education. And we are committed to fully funding and supporting the Promoting Safe and Stable Families Program, which helps strengthen family bonds, promote adoption, and provide help for vulnerable children across our country.

Volunteer service is one way parents can spend time with their children while encouraging them to learn the value of helping others. The USA Freedom Corps' ''How I Spent My Summer'' initiative includes volunteer opportunities where parents and children can work together to meet the needs of their communities. This initiative offers ideas such as collecting food for local food banks or school supplies for children in need. In addition, families can volunteer at one of our Nation's parks or recreation areas creating trails, assisting with archeological digs, or building and restoring houses. Teaching by example, parents can help their children become responsible citizens.

Parenting is one of the most rewarding and challenging endeavors in life. On this special day, we recognize the hard work and compassion of America's parents and celebrate the mothers and fathers who are positive role models for their children. I encourage parents to spend more time reading, talking, and volunteering with their children. I also urge parents to share the joys and wisdom of parenthood with new families in their communities and those planning families for the future.

NOW, THEREFORE, I, GEORGE W. BUSH, President of the United States of America, by virtue of the authority vested in me by the Constitution and laws of the United States and consistent with Public Law 103–362, as amended, do hereby proclaim Sunday, July 27, 2003, as Parents' Day. I encourage all Americans to express their respect and appreciation to parents everywhere for their contributions to their children, families, communities, and our Nation. I also call upon citizens to observe this day with appropriate programs, ceremonies, and activities.

IN WITNESS WHEREOF, I have hereunto set my hand this twenty-fifth day of July, in the year of our Lord two thousand three, and of the Independence of the United States of America the two hundred and twenty-eighth.

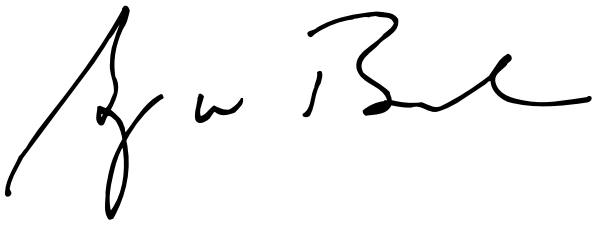

[FR Doc. 03–19571
Filed 7–29–03; 8:57 am]
Billing code 3195–01–P

Presidential Documents

Executive Order 13309 of July 25, 2003

Amendments to Executive Order 12994, and Renaming the President's Committee on Mental Retardation as the President's Committee for People with Intellectual Disabilities

By the authority vested in me as President by the Constitution and the laws of the United States of America, and in order to change the name of the ''President's Committee on Mental Retardation'' to the ''President's Committee for People with Intellectual Disabilities'' (the ''Committee'') and expand the membership of the Committee, it is hereby ordered as follows:

Section 1. The President's Committee on Mental Retardation is hereby renamed the President's Committee for People with Intellectual Disabilities.

Sec. 2. Executive Order 12994 of March 21, 1996, is hereby amended by deleting the words ''mental retardation'' and inserting the words ''intellectual disabilities'' in lieu thereof throughout the text of that order, except in the title, the first line of the preamble, and section 1 of that order.

Sec. 3. Section 1 of Executive Order 12994 is amended by deleting the words ''(the ''Committee'')'' and adding after ''responsibilities,'' the words ''and renamed the President's Committee for People with Intellectual Disabilities (the ''Committee''),''.

Sec. 4. Section 2 of Executive Order 12994 is amended by inserting after ''(5) The Secretary of Housing and Urban Development;'' the following: ''(6) The Secretary of Commerce; (7) The Secretary of Transportation; (8) The Secretary of the Interior; (9) The Secretary of Homeland Security;'' and renumbering former subsections (6) through (9) as subsections (10) through (13).

Sec. 5. The Committee is continued until September 30, 2005.

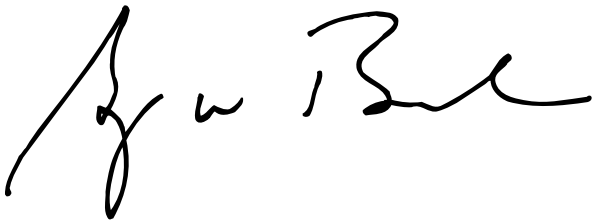

THE WHITE HOUSE,
July 25, 2003.

[FR Doc. 03–19572
Filed 7–29–03; 8:57 am]
Billing code 3195–01–P

Presidential Documents

Executive Order 13310 of July 28, 2003

Blocking Property of the Government of Burma and Prohibiting Certain Transactions

By the authority vested in me as President by the Constitution and the laws of the United States of America, including the International Emergency Economic Powers Act (50 U.S.C. 1701 *et seq.*) (IEEPA), the National Emergencies Act (50 U.S.C. 1601 *et seq.*), the Burmese Freedom and Democracy Act of 2003 (July 28, 2003), and section 301 of title 3, United States Code, and in order to take additional steps with respect to the Government of Burma's continued repression of the democratic opposition in Burma and with respect to the national emergency declared in Executive Order 13047 of May 20, 1997;

I, GEORGE W. BUSH, President of the United States of America, hereby order:

Section 1. Except to the extent provided in section 203(b)(1), (3), and (4) of IEEPA (50 U.S.C. 1702(b)(1), (3), and (4)), the Trade Sanctions Reform and Export Enhancement Act of 2000 (title IX, PublicLaw 106–387) (TSRA), or regulations, orders, directives, or licenses that may be issued pursuant to this order, and notwithstanding any contract entered into or any license or permit granted prior to the effective date of this order, all property and interests in property of the following persons that are in the United States, that hereafter come within the United States, or that are or hereafter come within the possession or control of United States persons, including their overseas branches, are blocked and may not be transferred, paid, exported, withdrawn, or otherwise dealt in:

(a) the persons listed in the Annex attached and made a part of this order; and

(b) any person determined by the Secretary of the Treasury, in consultation with the Secretary of State,

(i) to be a senior official of the Government of Burma, the State Peace and Development Council of Burma, the Union Solidarity and Development Association of Burma, or any successor entity to any of the foregoing; or

(ii) to be owned or controlled by, or acting or purporting to act for or on behalf of, directly or indirectly, any person whose property and interests in property are blocked pursuant to this order.

Sec. 2. Except to the extent provided in section 203(b) of IEEPA (50 U.S.C. 1702(b)), the TSRA, or regulations, orders, directives, or licenses that may be issued pursuant to this order, and notwithstanding any contract entered into or any license or permit granted prior to the effective date of this order, the following are prohibited:

(a) the exportation or reexportation, directly or indirectly, to Burma of any financial services either (i) from the United States or (ii) by a United States person, wherever located; and

(b) any approval, financing, facilitation, or guarantee by a United States person, wherever located, of a transaction by a foreign person where the transaction by that foreign person would be prohibited by this order if performed by a United States person or within the United States;

Sec. 3. Beginning 30 days after the effective date of this order, and except to the extent provided in section 8 of this order and in regulations, orders,

directives, or licenses that may be issued pursuant to this order, and notwithstanding any contract entered into or any license or permit granted prior to 30 days after the effective date of this order, the importation into the United States of any article that is a product of Burma is hereby prohibited.

Sec. 4. (a) Any transaction by a United States person or within the United States that evades or avoids, has the purpose of evading or avoiding, or attempts to violate any of the prohibitions set forth in this order is prohibited.

(b) Any conspiracy formed to violate any of the prohibitions set forth in this order is prohibited.

Sec. 5. For purposes of this order:

(a) the term ''person'' means an individual or entity;

(b) the term ''entity'' means a partnership, association, trust, joint venture, corporation, group, subgroup, or other organization;

(c) the term ''United States person'' means any United States citizen, permanent resident alien, entity organized under the laws of the United States or any jurisdiction within the United States (including foreign branches), or any person in the United States; and

(d) the term ''Government of Burma'' means the Government of Burma (sometimes referred to as Myanmar), its agencies, instrumentalities and controlled entities, and the Central Bank of Burma.

Sec. 6. I hereby determine that the making of donations of the type specified in section 203(b)(2) of IEEPA (50 U.S.C. 1702(b)(2)) by or to persons whose property and interests in property are blocked pursuant to section 1 of this order would seriously impair my ability to deal with the national emergency declared in Executive Order 13047, and hereby prohibit such donations as provided by section 1 of this order.

Sec. 7. For those persons whose property and interests in property are blocked pursuant to section 1 of this order who might have a constitutional presence in the United States, I find that because of the ability to transfer funds or other assets instantaneously, prior notice to such persons of measures to be taken pursuant to this order would render these measures ineffectual. I therefore determine that for these measures to be effective in addressing the national emergency declared in Executive Order 13047, there need be no prior notice of a listing or determination made pursuant to this order.

Sec. 8. Determining that such a waiver is in the national interest of the United States, I hereby waive the prohibitions described in section 3 of the Burmese Freedom and Democracy Act of 2003 with respect to any and all articles that are a product of Burma to the extent that prohibiting the importation of such articles would conflict with the international obligations of the United States under the Vienna Convention on Diplomatic Relations, the Vienna Convention on Consular Relations, the United Nations Headquarters Agreement, and other legal instruments providing equivalent privileges and immunities.

Sec. 9. The Secretary of the Treasury, in consultation with the Secretary of State, is hereby authorized to take such actions, including the promulgation of rules and regulations, and to employ all powers granted to the President by IEEPA and sections 3(a) and 4 of the Burmese Freedom and Democracy Act of 2003, other than the authority to make the determinations and certification to the Congress that Burma has met the conditions described in 3(a)(3) of the Act, as may be necessary to carry out the purposes of this order. The Secretary of the Treasury may redelegate any of these functions to other officers and agencies of the United States Government consistent with applicable law. The Secretary of State is authorized to exercise the functions and authorities conferred upon the President by section 3(b) of the Burmese Freedom and Democracy Act of 2003 and to redelegate these functions and authorities consistent with applicable law. All agencies of the United States Government are hereby directed to take all appropriate measures within their authority to carry out the provisions of this order.

Sec. 10. The Secretary of the Treasury, in consultation with the Secretary of State, is authorized to determine, subsequent to the issuance of this order, that circumstances no longer warrant inclusion of a person in the Annex to this order and that the property and interests in property of that person are therefore no longer blocked pursuant to section 1 of this order.

Sec. 11. Nothing in this order is intended to affect the continued effectiveness of any rules, regulations, orders, licenses, or other forms of administrative action issued, taken, or continued in effect heretofore or hereafter under 31 C.F.R. chapter V, except as expressly terminated, modified, or suspended by or pursuant to this order.

Sec. 12. Sections 1 through 7 of Executive Order 13047 are hereby revoked to the extent they are inconsistent with this order. All delegations, rules, regulations, orders, licenses, and other forms of administrative action made, issued, or otherwise taken under Executive Order 13047, not inconsistent with section 3 of this order and not revoked administratively, shall remain in full force and effect under this order until amended, modified, or terminated by proper authority. The revocation of any provision of Executive Order 13047 pursuant to this section shall not affect any violation of any rules, regulations, orders, licenses, or other forms of administrative action under that order during the period that such provision of that order was in effect.

Sec. 13. All provisions of this order other than section 3 shall not apply to any activity, or any transaction incident to an activity, undertaken pursuant to an agreement, or pursuant to the exercise of rights under such an agreement, that was entered into by a United States person with the Government of Burma or a nongovernmental entity in Burma prior to 12:01 a.m. eastern daylight time on May 21, 1997.

Sec. 14. This order is not intended to, and does not, create any right or benefit, substantive or procedural, enforceable at law or in equity by any party against the United States, its departments, agencies, instrumentalities, or entities, its officers or employees, or any other person.

Sec. 15. This order is effective on 12:01 a.m. eastern daylight time on July 29, 2003.

Sec. 16. This order shall be transmitted to the Congress and published in the **Federal Register**.

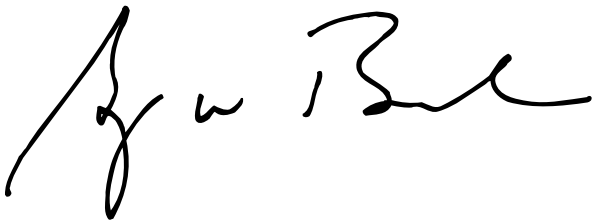

THE WHITE HOUSE,
July 28, 2003.

Billing code 3195–01–P

Annex

The State Peace and Development Council of Burma

Myanma Foreign Trade Bank (a.k.a. Myanmar Foreign Trade Bank)

Myanma Investment and Commercial Bank (a.k.a. MICB; a.k.a. Myanmar Investment and Commercial Bank)

Myanma Economic Bank (a.k.a. Myanmar Economic Bank)

[FR Doc. 03–19573
Filed 7–29–03; 8:57 am]
Billing code 3110–01–M

Reader Aids

Federal Register

Vol. 68, No. 146

Wednesday, July 30, 2003

CUSTOMER SERVICE AND INFORMATION

Federal Register/Code of Federal Regulations	
General Information, indexes and other finding aids	**202–741–6000**
Laws	**741–6000**
Presidential Documents	
Executive orders and proclamations	**741–6000**
The United States Government Manual	**741–6000**
Other Services	
Electronic and on-line services (voice)	**741–6020**
Privacy Act Compilation	**741–6064**
Public Laws Update Service (numbers, dates, etc.)	**741–6043**
TTY for the deaf-and-hard-of-hearing	**741–6086**

ELECTRONIC RESEARCH

World Wide Web

Full text of the daily Federal Register, CFR and other publications is located at: **http://www.access.gpo.gov/nara**

Federal Register information and research tools, including Public Inspection List, indexes, and links to GPO Access are located at: **http://www.archives.gov/federal__register/**

E-mail

FEDREGTOC-L (Federal Register Table of Contents LISTSERV) is an open e-mail service that provides subscribers with a digital form of the Federal Register Table of Contents. The digital form of the Federal Register Table of Contents includes HTML and PDF links to the full text of each document.

To join or leave, go to **http://listserv.access.gpo.gov** and select *Online mailing list archives, FEDREGTOC-L, Join or leave the list (or change settings);* then follow the instructions.

PENS (Public Law Electronic Notification Service) is an e-mail service that notifies subscribers of recently enacted laws.

To subscribe, go to **http://listserv.gsa.gov/archives/publaws-l.html** and select *Join or leave the list* (or change settings); then follow the instructions.

FEDREGTOC-L and **PENS** are mailing lists only. We cannot respond to specific inquiries.

Reference questions. Send questions and comments about the Federal Register system to: **info@fedreg.nara.gov**

The Federal Register staff cannot interpret specific documents or regulations.

FEDERAL REGISTER PAGES AND DATE, JULY

39005–39446 1
39447–39804 2
39805–40114 3
40115–40468 7
40469–40750 8
40751–41050 9
41041–41218 10
41219–41518 11
41519–41680 14
41681–41900 15
41901–42240 16
42241–42562 17
42563–42942 18
42943–43284 21
43285–43454 22
43455–43612 23
43613–43900 24
43901–44190 25
44191–44450 28
44451–44608 29
44609–44856 30

CFR PARTS AFFECTED DURING JULY

At the end of each month, the Office of the Federal Register publishes separately a List of CFR Sections Affected (LSA), which lists parts and sections affected by documents published since the revision date of each title.

3 CFR

Proclamations:
7688 39793
7689 39795
7690 40115
7691 43455
7692 44449
7693 44849

Executive Orders:
12994 (Amended by 13309) 44851
13047 (Amended by 13310) 44853
13309 44851
13310 44853

Administrative Orders:
Presidential Determinations:
No. 2003–27 of June 30, 2003 41219

4 CFR

Proposed Rules:
27 41742
28 41742
29 41742

5 CFR

2600 41681

Proposed Rules:
595 44489

6 CFR

Proposed Rules:
25 41420

7 CFR

54 39805
278 41051
279 41051
301 .....43285, 43286, 43613
400 43457
407 43457
457 43457
652 40751
718 39447
920 44191
925 41683
948 40117
989 .....41686, 42943
993 .....40754, 43614
999 43614
1405 39447
1487 42563

Proposed Rules:
301 40534
331 43660
373 40541
457 44668
868 42644
905 44237
922 43975
923 43975
924 43975
930 43978
948 .....43031, 44239
958 40815
987 44241
991 44244
1150 39861
1580 39478
2903 41751
3015 41947
3019 41947
3020 41947

8 CFR

103 43901
212 43901
214 43901
245 43901
248 43901
299 43901

9 CFR

53 42565
77 43618

Proposed Rules:
60 40541
130 .....40817, 43661

10 CFR

50 40469
72 42570
95 41221

Proposed Rules:
2 40026
20 40026
21 40026
34 41757
50 .....40026, 41963, 43673, 44672
51 40026
52 40026
72 .....40026, 42646
73 40026
140 40026
170 40026
Ch. II 40553
Ch. III 40553
Ch. X 40553

12 CFR

201 41054
225 .....39807, 41901
910 39810
913 39810

Proposed Rules:
Ch. 7 39863
613 44490
701 39866
745 39868
900 39027
932 39027
955 39027

13 CFR

121.....39448

Proposed Rules:

120.....40553
121.....40820, 43981

14 CFR

21.....43883
23.....40757
25.....40478, 43287
36.....43883
39 .....39449, 39815, 40478, 40481, 40483, 40484, 40487, 40759, 41055, 41056, 41059, 41063, 41210, 41519, 41521, 41861, 41901, 41903, 41906, 42241, 42242, 42244, 42573, 42577, 42578, 42580, 42581, 42583, 42948, 42950, 42952, 42954, 42956, 42957, 42958, 43260, 43621, 44196, 44197, 44385, 44609, 44610
71 .....40761, 40762, 40763, 40764, 40765, 41691, 41692, 41693, 41694, 41695, 41696, 42246, 42962, 43292, 43293, 43477, 43921, 44199, 44200, 44201, 44202, 44451, 44452, 44453, 44454
73.....42963
91.....41212, 43883
93.....41212
95.....44611
97 .....41523, 41525, 44203, 44205
119.....41214
121 .....41214, 42874, 42832
125.....42832
129.....42874
135.....41214, 42832
330.....44455
382.....40488
399.....43882

Proposed Rules:

21.....43885
23.....42315
39 .....39483, 39485, 39870, 40573, 40821, 40823, 40827, 40829, 40831, 40834, 41760, 41762, 41967, 41968, 41970, 41972, 41973, 41977, 42317, 42647, 43033, 43040, 43042, 43045, 43681, 43683, 43686, 43688, 43690, 43693, 43695, 43698, 44252, 44491, 44493, 44495, 44497, 44672
61.....43885
65.....43885
71 .....39238, 42322, 43340, 44255
77.....43885
107.....43885
109.....43885
119.....40206
121.....40206, 43885
125.....42323
135 .....40206, 42323, 43885
145.....40206, 43885
154.....43885
204.....44675
1275.....43982

15 CFR

30.....42534
50.....42585
80.....42585
922.....39005, 43922
2016.....43922

Proposed Rules:

930.....40207

16 CFR

Proposed Rules:

460.....41872

17 CFR

4.....42964
30.....39006, 40498
275.....42247
279.....42247

Proposed Rules:

1.....40835

18 CFR

101.....40500
141.....40500
201.....40500
260.....40500
352.....40500
357.....40500

Proposed Rules:

141.....40340
260.....40340
284.....40207
357.....40340
375.....40340

19 CFR

10.....43624
24.....43624
101.....42586, 42587
102.....43630
111.....43624
122.....42587
133.....43635

Proposed Rule:

4.....43574
101.....42650
103.....43574
113.....43574
122.....43574
123.....43574
192.....43574

20 CFR

218.....39009
220.....39009
225.....39009
404.....40119
416.....40119

Proposed Rules:

404.....40213
416.....40213

21 CFR

101 .....39831, 41434, 44207
510.....41065, 42250
520 .....41065, 42967, 42968, 43293, 43925
522 .....42250, 42589, 42968
524.....42250, 42969
556.....42589
558.....41066, 42589
862.....40125
884.....44414
1300.....41222
1301.....41222
1304.....41222
1305.....41222
1307.....41222

Proposed Rules:

101.....41507
131.....39873
348.....42324
600.....44678
606.....44678
610.....44678
640.....44678
1301.....40576

22 CFR

41.....40127
126.....44613

Proposed Rules:

303.....39490

23 CFR

Proposed Rules:

945.....43888

24 CFR

200.....44844

Proposed Rules:

1000.....42651
3282.....42327, 43987

25 CFR

11.....44614

Proposed Rules:

Ch. I.....39038, 42651

26 CFR

1 .....39011, 39012, 39452, 39453, 40129, 40130, 40510, 40766, 41067, 41230, 41417, 41906, 42251, 42254, 42590, 42970, 44616
20.....40130, 42593
25.....40130, 42593
301.....40768, 41073
602 .....39012, 41067, 41230, 41906, 42254, 44616

Proposed Rules:

1 .....39498, 40218, 40224, 40579, 40581, 40583, 40848, 41087, 42476, 42652, 43047, 43055, 43058, 43059, 44499, 44689
31.....42329
301 .....39498, 40849, 40850, 40857, 41089, 41090

27 CFR

4.....39454
9.....39833
40.....43294
275.....43294

Proposed Rules:

4.....39500
24.....39500

28 CFR

2.....41527, 41696

29 CFR

102.....39836
1952.....43457
1956.....43457
4022.....41714
4044.....41714

Proposed Rules:

35.....41512
1625.....41542
1627.....41542
1926.....39877, 39880

30 CFR

75.....40132
250 .....41077, 41861, 43295
913.....40138
917 .....41911, 42266, 42274
920.....42277
934.....40142
938.....40147
943.....40154
948.....40157

Proposed Rules:

70.....39881
75.....39881
90.....39881
250.....40585, 41090
254.....40585
917.....41980
934.....40225
935.....43063
946.....40227

31 CFR

50.....41250
348.....41266

Proposed Rules:

103.....39039

32 CFR

9.....39374
10.....39379
11.....39381
12.....39387
13.....39389
14.....39391
15.....39394
16.....39395
17.....39397
199.....43299
701.....43461

33 CFR

2.....42595
26 .....39353, 41913, 42595
62.....42595
64.....42595
95.....42595
100 .....40167, 42282, 42595
101.....39240, 41914
102.....39240, 41914
103.....39284, 41914
104.....39292, 41915
105.....39315, 41916
106.....39338, 41916
110.....42285
117 .....41716, 41917, 41918, 41920, 42282, 43303, 43305, 43306
120.....42595
160.....39292, 41915
161.....39353, 41913
164.....39353, 41913
165 .....39013, 39015, 39017, 39292, 39353, 39455, 40024, 40168, 40169, 40170, 40173, 40174, 40176, 40770, 40772, 41078, 41081, 41268, 41269, 41531, 41716, 41719, 41721, 41722, 41913, 41915, 41920, 41922, 42282, 42285, 42287, 42289, 42595, 43308, 43309, 43637, 43926, 44209, 44458, 44618

Proposed Rules:

100.....40615
110.....39503
117 .....42331, 43066, 44506
147.....40229
151.....44691

165 .....40231, 40859, 41091, 41764, 41982, 41984, 43700, 44256, 44696, 44706

34 CFR

263.....43639

36 CFR

Proposed Rules:
7.....43068
99.....44420
219.....41864
294.....41864, 41865

37 CFR

1.....41532
260.....39837

38 CFR

3.....42602
17.....43927
21.....42977
Proposed Rules:
17.....44507

39 CFR

111.....40774
Proposed Rules:
111.....43989

40 CFR

51.....39842, 44620
52 .....39457, 40520, 40528, 40782, 40786, 40789, 41083, 42172, 42978, 42981, 43312, 43316, 43462, 44620, 44631
62.....40531
63.....42603
70.....40528
80.....39018
81.....40789, 43316
82 .....41925, 42884, 43786, 43930
131.....40428
136.....43272
180 .....39428, 39435, 39460, 39462, 39846, 40178, 40791, 40803, 41271, 41535, 41927, 43465, 44635, 44640
261 .....43939, 44652, 44659
271.....42605, 43326
279.....44659
300.....41273
Proposed Rules:
19.....39882
27.....39882
30.....43824
31.....43824
33.....43824
35.....43824
40.....43824
51.....39888
52 .....39041, 39506, 40233, 40617, 40861, 40864, 40865, 41987, 42174, 42653, 42657, 43069, 43341, 43481, 44714, 44715
62.....40618
70.....40617, 40871
81 .....42657, 43341, 44715
82.....43991
136.....41988
180.....41989
271.....42662
300 .....44259, 44265, 44270

41 CFR

Proposed Rules:
105-55.....42170
105-56.....41093
105-550.....41274
105-570.....41290
301–50.....40618

42 CFR

411.....43940
412.....41860
489.....43940
Proposed Rules:
405.....43995
406.....43998
411.....43995
424.....44000

43 CFR

10.....39853

44 CFR

64.....39019
65 .....39021, 44460, 44461
67 .....39023, 44463, 44465, 44466

Proposed Rules:
67 .....39042, 39044, 39046, 44509, 44516

46 CFR

2.....39292, 41915
7.....42595
28.....42595
31.....39292, 41915
71.....39292, 41915
91.....39292, 41915
115.....39292, 41915
126.....39292, 41915
176.....39292, 41915
401.....43470
530.....43326

47 CFR

0.....39471
1.....42984
21.....42984, 43002
22.....42290, 42984
24.....42984
25.....43645, 43942
27.....42984
32.....38641
52.....43003, 43009
54 .....38642, 39471, 41936, 43472
64 .....40184, 41942, 43010, 44144
68.....44144
69.....43327
73 .....38643, 40185, 40186, 40187, 41284, 41724, 42608, 42609, 42984, 43329, 43645, 43646
74.....41284
80.....42984
90.....42296, 42984
95.....42984
101 .....42610, 42984, 43942
Proposed Rules:
1.....40876, 44003
2.....44011
15.....44011
22.....44003
52.....43070
54.....41996, 42333
73 .....40237, 42662, 42663, 42664, 42665, 42666, 43702, 43703, 43704, 43705, 44273
90.....42337, 44003

48 CFR

Ch. 1.....43854, 43875
Ch. 10.....39854, 42717
1.....43855
2.....43857
5.....43855, 43859
7.....43859
10.....43859
11.....43857
14.....43855
19.....43855, 43873
22.....43855, 43863
23.....43857, 43868
31.....43863, 43871
36.....43855
37.....43863
39.....43872
52 .....43855, 43863, 43868, 43873
53.....43855
207.....43331
217.....43332
501.....41286
538.....41286
552.....41286
1801.....43333
1811.....43333
1823.....43333
1851.....43333
1852.....43333
Proposed Rules:
15.....40466
30.....40104
31.....40466
52.....40104

49 CFR

40.....43946
71.....43334, 43336
214.....44388
512.....44209
541.....39471
571 .....43964, 43972, 44468
575.....43339
587.....44468
Proposed Rules:
192.....41768
219.....44276
390.....42339
391.....42339, 43889
393.....43891
395.....43893
396.....43893
571.....43895
583.....43899

50 CFR

17 .....39624, 40076, 43647
20.....43010
21.....43010
92.....43010
223.....41942
229.....41725
300.....39024
600.....42613
648 .....40808, 41945, 43974, 44232
660 .....40187, 41085, 42643, 43473
679 .....40811, 40812, 41085, 41086, 41946, 43030, 43479, 43480, 44473, 44665, 44666
Proposed Rules:
16.....43482
17 .....39507, 39892, 42666, 43706
18.....44020
20.....42546
223.....44722
229.....40888
600 .....40892, 42360, 42668, 42669, 42670, 43072, 44277
635.....41103, 41769
648.....41535, 42671
660.....44518
679.....43342, 43483
697 .....39048, 42360, 43074

REMINDERS

The items in this list were editorially compiled as an aid to Federal Register users. Inclusion or exclusion from this list has no legal significance.

RULES GOING INTO EFFECT JULY 30, 2003

COMMERCE DEPARTMENT

Patent and Trademark Office

Patents:

Application records; electronic maintenance; published 6-30-03

ENVIRONMENTAL PROTECTION AGENCY

Pesticides; tolerances in food, animal feeds, and raw agricultural commodities:

Bacillus subtilis var. amyloliquefaciens (strain FZB24); published 7-30-03

Boscalid; published 7-30-03

Solid wastes:

Hazardous waste; identification and listing—

Exclusions; published 7-30-03

FEDERAL COMMUNICATIONS COMMISSION

Frequency allocations and radio treaty matters:

4.9 GHz band transferred from Federal government use; published 6-30-03

HOMELAND SECURITY DEPARTMENT

Coast Guard

Drawbridge operations:

Virginia; published 7-16-03

Ports and waterways safety:

Lake Michigan—

Navy Pier, Chicago, IL; regulated navigation area, safety zone, and anchorage areas; published 7-17-03

INTERIOR DEPARTMENT

Indian Affairs Bureau

Law and order on Indian reservations:

Paiute-Shoshone Indian Tribe of Fallon Reservation and Colony, NV; Court of Indian Offenses removed; published 7-30-03

LABOR DEPARTMENT

Veterans Employment and Training Service

Services to veterans; Funding formats for grants to states; published 6-30-03

STATE DEPARTMENT

International Traffic in Arms regulations:

Rwanda; partial lifting of embargo; published 7-30-03

TRANSPORTATION DEPARTMENT

Federal Aviation Administration

Airworthiness directives:

Rolls-Royce plc; published 6-25-03

COMMENTS DUE NEXT WEEK

AGRICULTURE DEPARTMENT

Animal and Plant Health Inspection Service

Exportation and importation of animals and animal products:

Cattle from Mexico; importation into U.S. prohibited due to tuberculosis; comments due by 8-4-03; published 6-3-03 [FR 03-13838]

AGRICULTURE DEPARTMENT

Forest Service

State and private forestry assistance:

Forest Land Enhancement Program; comments due by 8-8-03; published 6-9-03 [FR 03-14259]

AGRICULTURE DEPARTMENT

Grain Inspection, Packers and Stockyards Administration

Wheat; U.S. standards; comments due by 8-4-03; published 6-4-03 [FR 03-13772]

AGRICULTURE DEPARTMENT

Natural Resources Conservation Service

Support activities:

Technical service provider assistance; comments due by 8-8-03; published 7-9-03 [FR 03-17260]

COMMERCE DEPARTMENT

National Oceanic and Atmospheric Administration

Endangered Species Act; interagency cooperation:

National Fire Plan; implementation; comments due by 8-4-03; published 6-5-03 [FR 03-14108]

Fishery conservation and management:

Atlantic highly migratory species—

Atlantic bluefin tuna; comments due by 8-8-03; published 7-10-03 [FR 03-17521]

Atlantic swordfish; comments due by 8-4-03; published 6-20-03 [FR 03-15690]

Swordfish and bluefin tuna; comments due by 8-4-03; published 7-15-03 [FR 03-17867]

Magnuson-Stevens Act provisions—

Domestic fisheries; exempted fishing permit applications; comments due by 8-4-03; published 7-18-03 [FR 03-18339]

Domestic fisheries; exempted fishing permit applications; comments due by 8-4-03; published 7-18-03 [FR 03-18341]

Domestic fisheries; exempted fishing permit applications; comments due by 8-4-03; published 7-18-03 [FR 03-18342]

Domestic fisheries; exempted fishing permit applications; comments due by 8-5-03; published 7-21-03 [FR 03-18488]

COMMERCE DEPARTMENT

National Oceanic and Atmospheric Administration

Fishery conservation and management:

West Coast States and Western Pacific fisheries—

Pacific whiting; comments due by 8-4-03; published 7-18-03 [FR 03-18164]

DEFENSE DEPARTMENT

Acquisition regulations:

Follow-on production contracts for products developed pursuant to prototype projects; comments due by 8-4-03; published 6-3-03 [FR 03-13536]

Federal Acquisition Regulation (FAR):

Deferred compensation and postretirement benefits other than pensions; comments due by 8-4-03; published 6-3-03 [FR 03-13859]

Unsolicited proposals; comments due by 8-4-03; published 6-3-03 [FR 03-13860]

ENERGY DEPARTMENT

Federal Energy Regulatory Commission

Electric utilities (Federal Power Act), natural gas companies (Natural Gas Act), and oil pipeline companies (Interstate Commerce Act):

Quarterly financial reporting requirements and annual reports revisions; comments due by 8-6-03; published 7-7-03 [FR 03-16811]

Natural Gas Policy Act:

Blanket sales certificates; comments due by 8-6-03; published 7-7-03 [FR 03-16820]

ENERGY DEPARTMENT

Federal Energy Regulatory Commission

Practice and procedure:

Cash management programs; documentation requirements; comments due by 8-7-03; published 7-8-03 [FR 03-16819]

ENVIRONMENTAL PROTECTION AGENCY

Air pollution control:

State operating permits programs—

Texas; comments due by 8-8-03; published 7-9-03 [FR 03-17338]

Air programs:

Stratospheric ozone protection—

Ozone-depleting substance; substitutes list; comments due by 8-4-03; published 6-3-03 [FR 03-13254]

ENVIRONMENTAL PROTECTION AGENCY

Air programs; approval and promulgation; State plans for designated facilities and pollutants:

Iowa; comments due by 8-7-03; published 7-8-03 [FR 03-17101]

ENVIRONMENTAL PROTECTION AGENCY

Air programs; approval and promulgation; State plans for designated facilities and pollutants:

Iowa; comments due by 8-7-03; published 7-8-03 [FR 03-17102]

ENVIRONMENTAL PROTECTION AGENCY

Air quality implementation plans:

Preparation, adoption, and submittal—

Regional haze rule; Western States and Indian tribes; mobile source provisions; comments due by 8-4-03; published 7-3-03 [FR 03-16922]

ENVIRONMENTAL PROTECTION AGENCY
Air quality implementation plans:
Preparation, adoption, and submittal—
Regional haze rule; Western States and Indian tribes; mobile source provisions; comments due by 8-4-03; published 7-3-03 [FR 03-16923]
Air quality implementation plans; approval and promulgation; various States:
California; comments due by 8-6-03; published 7-7-03 [FR 03-16926]

ENVIRONMENTAL PROTECTION AGENCY
Air quality implementation plans; approval and promulgation; various States:
Georgia; comments due by 8-8-03; published 7-9-03 [FR 03-17204]

ENVIRONMENTAL PROTECTION AGENCY
Air quality implementation plans; approval and promulgation; various States:
Georgia; comments due by 8-8-03; published 7-9-03 [FR 03-17205]
Maryland; comments due by 8-8-03; published 7-9-03 [FR 03-17340]

ENVIRONMENTAL PROTECTION AGENCY
Air quality implementation plans; approval and promulgation; various States:
Nebraska; comments due by 8-7-03; published 7-8-03 [FR 03-17098]

ENVIRONMENTAL PROTECTION AGENCY
Air quality implementation plans; approval and promulgation; various States:
Nebraska; comments due by 8-7-03; published 7-8-03 [FR 03-17099]
Texas; comments due by 8-8-03; published 7-9-03 [FR 03-17339]
Civil monetary penalties; inflation adjustment; comments due by 8-4-03; published 7-3-03 [FR 03-16925]
Human testing; standards and criteria; comments due by 8-5-03; published 5-7-03 [FR 03-11002]

ENVIRONMENTAL PROTECTION AGENCY
Pesticides; tolerances in food, animal feeds, and raw agricultural commodities:
Thymol and eucalyptus oil; comments due by 8-5-03; published 6-6-03 [FR 03-14198]

ENVIRONMENTAL PROTECTION AGENCY
Solid wastes:
Hazardous waste; identification and listing—
Exclusions; comments due by 8-4-03; published 6-18-03 [FR 03-15361]

FEDERAL COMMUNICATIONS COMMISSION
Frequency allocations and radio treaty matters:
76-81 GHz frequency and frequency bands above 95 GHz reallocation; domestic and international consistency realignment; comments due by 8-4-03; published 6-3-03 [FR 03-13780]
Practice and procedure:
Wireless telecommunications services—
Communications facilities and historic properties; nationwide programmatic agreement; comments due by 8-8-03; published 7-9-03 [FR 03-17415]
Radio frequency devices:
Broadband power line systems; comments due by 8-6-03; published 5-23-03 [FR 03-12914]

GENERAL SERVICES ADMINISTRATION
Federal Acquisition Regulation (FAR):
Deferred compensation and postretirement benefits other than pensions; comments due by 8-4-03; published 6-3-03 [FR 03-13859]
Unsolicited proposals; comments due by 8-4-03; published 6-3-03 [FR 03-13860]

GOVERNMENT ETHICS OFFICE
Organization and procedures:
Statutory gift acceptance authority; comments due by 8-4-03; published 5-5-03 [FR 03-11043]

HEALTH AND HUMAN SERVICES DEPARTMENT
Food and Drug Administration
Human drugs:
Opthalmic products (OTC); final monograph; technical amendment; comments due by 8-4-03; published 6-3-03 [FR 03-13827]

HOMELAND SECURITY DEPARTMENT
Coast Guard
Ports and waterways safety:
Beverly Harbor, MA; safety zone; comments due by 8-8-03; published 7-9-03 [FR 03-17367]

INTERIOR DEPARTMENT
Fish and Wildlife Service
Endangered and threatened species:
Critical habitat designations—
Braun's rock-cress; comments due by 8-4-03; published 6-3-03 [FR 03-13509]
Endangered Species Act; interagency cooperation:
National Fire Plan; implementation; comments due by 8-4-03; published 6-5-03 [FR 03-14108]
Importation, exportation, and transportation of wildlife:
Injurious wildlife—
Black carp; comments due by 8-4-03; published 6-4-03 [FR 03-13996]

INTERIOR DEPARTMENT
Surface Mining Reclamation and Enforcement Office
Permanent program and abandoned mine land reclamation plan submissions:
North Dakota; comments due by 8-6-03; published 7-7-03 [FR 03-17084]
Virginia; comments due by 8-6-03; published 7-7-03 [FR 03-17083]

JUSTICE DEPARTMENT
Prisons Bureau
Inmate control, custody, care, etc.:
Release transportation regulations; clarification; comments due by 8-8-03; published 6-9-03 [FR 03-14380]

NATIONAL AERONAUTICS AND SPACE ADMINISTRATION
Federal Acquisition Regulation (FAR):
Deferred compensation and postretirement benefits other than pensions; comments due by 8-4-03; published 6-3-03 [FR 03-13859]
Unsolicited proposals; comments due by 8-4-03; published 6-3-03 [FR 03-13860]

NUCLEAR REGULATORY COMMISSION
Radioactive material; packaging and transportation:
Safe transportation regulations; public meeting; comments due by 8-8-03; published 6-26-03 [FR 03-16175]

RAILROAD RETIREMENT BOARD
Railroad Retirement Act:
Disability earnings determinations; comments due by 8-8-03; published 6-9-03 [FR 03-14273]

SMALL BUSINESS ADMINISTRATION
Business loans:
Certified Development Company Loan Program changes; comments due by 8-7-03; published 7-8-03 [FR 03-16862]
Small business size standards:
Nonmanufacturer rule; waivers—
Ammunition (except small arms); comments due by 8-8-03; published 7-25-03 [FR 03-18986]

TRANSPORTATION DEPARTMENT
Federal Aviation Administration
Aircraft products, parts, and materials; false and misleading statements; comments due by 8-4-03; published 5-5-03 [FR 03-10946]
Airworthiness directives:
Boeing; comments due by 8-4-03; published 6-18-03 [FR 03-15324]
Bombardier; comments due by 8-8-03; published 7-9-03 [FR 03-17319]
Cessna; comments due by 8-8-03; published 5-15-03 [FR 03-12113]
Dornier; comments due by 8-8-03; published 7-9-03 [FR 03-17314]
Eurocopter Deutschland GmbH; comments due by 8-4-03; published 6-5-03 [FR 03-14136]

TRANSPORTATION DEPARTMENT
Federal Aviation Administration
Airworthiness directives:
Eurocopter France; comments due by 8-4-03; published 6-3-03 [FR 03-13654]

TRANSPORTATION DEPARTMENT

Federal Aviation Administration

Airworthiness directives:

Eurocopter France; comments due by 8-4-03; published 6-5-03 [FR 03-14134]

International Aero Engines; comments due by 8-4-03; published 6-5-03 [FR 03-14133]

TRANSPORTATION DEPARTMENT

Federal Aviation Administration

Airworthiness directives:

Learjet; comments due by 8-4-03; published 6-18-03 [FR 03-15339]

McDonnell Douglas; comments due by 8-4-03; published 6-18-03 [FR 03-15333]

Mitsubishi Heavy Industries, Ltd.; comments due by 8-5-03; published 6-4-03 [FR 03-13980]

TRANSPORTATION DEPARTMENT

Federal Aviation Administration

Airworthiness directives:

New Piper Aircraft, Inc.; correction; comments due by 8-8-03; published 7-21-03 [FR C3-13650]

TRANSPORTATION DEPARTMENT

Federal Aviation Administration

Airworthiness directives:

Pilatus Aircraft Ltd; comments due by 8-4-03; published 7-3-03 [FR 03-16844]

TRANSPORTATION DEPARTMENT

Federal Aviation Administration

Airworthiness directives:

Piper Aircraft, Inc.; comments due by 8-8-03; published 6-4-03 [FR 03-13650]

TRANSPORTATION DEPARTMENT

Federal Aviation Administration

Airworthiness directives:

Pratt & Whitney Canada; comments due by 8-5-03; published 6-6-03 [FR 03-14276]

Raytheon; comments due by 8-4-03; published 6-4-03 [FR 03-13979]

TRANSPORTATION DEPARTMENT

Federal Aviation Administration

Airworthiness directives:

Rolls-Royce plc; comments due by 8-4-03; published 6-4-03 [FR 03-13973]

TRANSPORTATION DEPARTMENT

Federal Aviation Administration

Airworthiness standards:

Special conditions—

CenTex Aerospace, Inc.; Raytheon/Beech Model 58 airplane; comments due by 8-8-03; published 7-9-03 [FR 03-17249]

TRANSPORTATION DEPARTMENT

Federal Aviation Administration

Class E airspace; comments due by 8-4-03; published 6-4-03 [FR 03-14070]

TRANSPORTATION DEPARTMENT

National Highway Traffic Safety Administration

Motor vehicle safety standards:

Child restraint systems—-

Improved test dummies, updated test procedures, and extended child restraints standards for children up to 65 pounds; comments due by 8-8-03; published 6-24-03 [FR 03-14425]

TRANSPORTATION DEPARTMENT

National Highway Traffic Safety Administration

Motor vehicle safety standards:

Vehicle compatibility and roll over mitigation; safety reports availability; comments due by 8-4-03; published 6-18-03 [FR 03-15239]

TREASURY DEPARTMENT

Foreign Assets Control Office

Global terrorism; sanctions regulations; comments due by 8-5-03; published 6-6-03 [FR 03-14251]

TREASURY DEPARTMENT

Fiscal Service

Financial Management Service:

Automated Clearing House; Federal agency participation; comments due by 8-4-03; published 6-5-03 [FR 03-13833]

TREASURY DEPARTMENT

Internal Revenue Service

Income taxes:

Property transferees; liabilities assumed in certain transactions; comments due by 8-4-03; published 5-6-03 [FR 03-11212]

Securities and commodities; statutory valuation requirements; safe harbor; comments due by 8-4-03; published 5-5-03 [FR 03-11047]

Separate return limitation years; loss carryovers waiver; cross-reference; comments due by 8-5-03; published 5-7-03 [FR 03-11210]

VETERANS AFFAIRS DEPARTMENT

Board of Veterans Appeals:

Appeals regulations and rules of practice—

Representative services withdrawal; notice procedures; comments due by 8-4-03; published 6-3-03 [FR 03-13797]

LIST OF PUBLIC LAWS

This is a continuing list of public bills from the current session of Congress which have become Federal laws. It may be used in conjunction with ''P L U S'' (Public Laws Update Service) on 202–741–6043. This list is also available online at *http://www.nara.gov/fedreg/plawcurr.html*.

The text of laws is not published in the **Federal Register** but may be ordered in ''slip law'' (individual pamphlet) form from the Superintendent of Documents, U.S. Government Printing Office, Washington, DC 20402 (phone, 202–512–1808). The text will also be made available on the Internet from GPO Access at *http://www.access.gpo.gov/nara/nara005.html*. Some laws may not yet be available.

H.R. 2330/P.L. 108–61

Burmese Freedom and Democracy Act of 2003 (July 28, 2003; 117 Stat. 864)

Last List July 21, 2003

Public Laws Electronic Notification Service (PENS)

PENS is a free electronic mail notification service of newly enacted public laws. To subscribe, go to *http://listserv.gsa.gov/archives/publaws-l.html*

Note: This service is strictly for E-mail notification of new laws. The text of laws is not available through this service. **PENS** cannot respond to specific inquiries sent to this address.