AUTHENTICATED U.S. GOVERNMENT INFORMATION GPO

Federal Register

12–29–03 Monday
Vol. 68 No. 248 Dec. 29, 2003

Pages 74829–75106

The **FEDERAL REGISTER** (ISSN 0097–6326) is published daily, Monday through Friday, except official holidays, by the Office of the Federal Register, National Archives and Records Administration, Washington, DC 20408, under the Federal Register Act (44 U.S.C. Ch. 15) and the regulations of the Administrative Committee of the Federal Register (1 CFR Ch. I). The Superintendent of Documents, U.S. Government Printing Office, Washington, DC 20402 is the exclusive distributor of the official edition. Periodicals postage is paid at Washington, DC.

The **FEDERAL REGISTER** provides a uniform system for making available to the public regulations and legal notices issued by Federal agencies. These include Presidential proclamations and Executive Orders, Federal agency documents having general applicability and legal effect, documents required to be published by act of Congress, and other Federal agency documents of public interest.

Documents are on file for public inspection in the Office of the Federal Register the day before they are published, unless the issuing agency requests earlier filing. For a list of documents currently on file for public inspection, see *http://www.nara.gov/fedreg.*

The seal of the National Archives and Records Administration authenticates the Federal Register as the official serial publication established under the Federal Register Act. Under 44 U.S.C. 1507, the contents of the **Federal Register** shall be judicially noticed.

The **Federal Register** is published in paper and on 24x microfiche. It is also available online at no charge as one of the databases on GPO Access, a service of the U.S. Government Printing Office.

The online edition of the **Federal Register** *www.access.gpo.gov/nara,* available through GPO Access, is issued under the authority of the Administrative Committee of the Federal Register as the official legal equivalent of the paper and microfiche editions (44 U.S.C. 4101 and 1 CFR 5.10). It is updated by 6 a.m. each day the **Federal Register** is published and includes both text and graphics from Volume 59, Number 1 (January 2, 1994) forward.

For more information about GPO Access, contact the GPO Access User Support Team, call toll free 1-888-293-6498; DC area 202-512-1530; fax at 202-512-1262; or via email at *gpoaccess@gpo.gov.* The Support Team is available between 7:00 a.m. and 9:00 p.m. Eastern Time, Monday–Friday, except official holidays.

The annual subscription price for the **Federal Register** paper edition is $699, or $764 for a combined **Federal Register, Federal Register** Index and List of CFR Sections Affected (LSA) subscription; the microfiche edition of the **Federal Register** including the **Federal Register** Index and LSA is $264. Six month subscriptions are available for one-half the annual rate. The charge for individual copies in paper form is $10.00 for each issue, or $10.00 for each group of pages as actually bound; or $2.00 for each issue in microfiche form. All prices include regular domestic postage and handling. International customers please add 40% for foreign handling. Remit check or money order, made payable to the Superintendent of Documents, or charge to your GPO Deposit Account, VISA, MasterCard, American Express, or Discover. Mail to: New Orders, Superintendent of Documents, P.O. Box 371954, Pittsburgh, PA 15250-7954; or call toll free 1-866-512-1800, DC area 202-512-1800; or go to the U.S. Government Online Bookstore site, *bookstore@gpo.gov.*

There are no restrictions on the republication of material appearing in the **Federal Register.**

How To Cite This Publication: Use the volume number and the page number. Example: 68 FR 12345.

Postmaster: Send address changes to the Superintendent of Documents, Federal Register, U.S. Government Printing Office, Washington DC 20402, along with the entire mailing label from the last issue received.

SUBSCRIPTIONS AND COPIES

PUBLIC

Subscriptions:

Paper or fiche	**202–512–1800**
Assistance with public subscriptions	**202–512–1806**

General online information **202–512–1530; 1–888–293–6498**

Single copies/back copies:

Paper or fiche	**202–512–1800**
Assistance with public single copies	**1–866–512–1800 (Toll-Free)**

FEDERAL AGENCIES

Subscriptions:

Paper or fiche	**202–741–6005**
Assistance with Federal agency subscriptions	**202–741–6005**

What's NEW!

Federal Register Table of Contents via e-mail

Subscribe to FEDREGTOC, to receive the **Federal Register** Table of Contents in your e-mail every day.

If you get the HTML version, you can click directly to any document in the issue.

To subscribe, go to **http://listserv.access.gpo.gov** and select:

Online mailing list archives
FEDREGTOC-L
Join or leave the list

Then follow the instructions.

What's NEW!

Regulations.gov, the award-winning Federal eRulemaking Portal

Regulations.gov is the one-stop U.S. Government web site that makes it easy to participate in the regulatory process.

Try this fast and reliable resource to find all rules published in the *Federal Register* that are currently open for public comment. Submit comments to agencies by filling out a simple web form, or use available email addresses and web sites.

The Regulations.gov e-democracy initiative is brought to you by NARA, GPO, EPA and their eRulemaking partners.

Visit the web site at: **http://www.regulations.gov**

Printed on recycled paper.

Contents

Federal Register

Vol. 68, No. 248

Monday, December 29, 2003

Agricultural Marketing Service
PROPOSED RULES
Milk marketing orders:
Pacific Northwest et al., 74874

Agricultural Research Service
NOTICES
Meetings:
Dietary Guidelines Advisory Committee, 74941–74942

Agriculture Department
See Agricultural Marketing Service
See Agricultural Research Service
See Food and Nutrition Service

Army Department
See Engineers Corps

Arts and Humanities, National Foundation
See National Foundation on the Arts and the Humanities

Blind or Severely Disabled, Committee for Purchase From People Who Are
See Committee for Purchase From People Who Are Blind or Severely Disabled

Centers for Disease Control and Prevention
NOTICES
Grants and cooperative agreements; availability, etc.:
Human immunodeficiency virus (HIV)—
Capacity building assistance to improve delivery and effectiveness of HIV prevention services for racial/ethnic minority populations; correction, 74962
Meetings:
Disease, Disability, and Injury Prevention and Control Special Emphasis Panels, 74962–74963
Scientific Counselors Board, 74963

Coast Guard
RULES
Ports and waterways safety:
Gulf Intracoastal Waterway, Louisa, LA; safety zone, 74861–74863
Suisun Bay, CA; security zones, 74863–74866

Commerce Department
See National Oceanic and Atmospheric Administration

Committee for Purchase From People Who Are Blind or Severely Disabled
NOTICES
Procurement list; additions and deletions, 74942–74943

Committee for the Implementation of Textile Agreements
NOTICES
Bilateral textile consultations:
China, 74944–74949

Consumer Product Safety Commission
PROPOSED RULES
Federal Hazardous Substances Act:
Baby bath seats; requirements, 74878–74892

Defense Department
See Engineers Corps
RULES
Various CFR parts removed, 74860–74861
NOTICES
Mandatory Declassification Review requests; address list, 74949

Education Department
NOTICES
Agency information collection activities; proposals, submissions, and approvals, 74950–74951

Employment and Training Administration
NOTICES
Adjustment assistance:
AK Steel Corp., 74972
American Suessen Corp., 74972
Control Engineering Co. et al., 74972
Descartes Systems (USA) LLC, 74972–74973
Exfo Gnubi Products Group, Inc., et al., 74973
Fishing Vessels—
Bad Betty, 74973
Gentry Mills, Inc., et al., 74973–74976
Martens Manufacturing, LLC, 74976
Nortel Networks Corp. et al., 74976
TCI Machinery, Inc., et al., 74976–74982

Employment Standards Administration
NOTICES
Minimum wages for Federal and federally-assisted construction; general wage determination decisions, 74982–74983

Energy Department
See Federal Energy Regulatory Commission
NOTICES
Radioactive waste:
Caliente rail corridor selected as preferred corridor for Yucca Mountain, NV, geologic repository, 74951–74952

Engineers Corps
NOTICES
Environmental statements; notice of intent:
Yucaipa, San Bernardino County, CA; Wilson Creek/Oak Glen Creek Feasibility Study, 74949–74950

Environmental Protection Agency
RULES
Air pollutants, hazardous; national emission standards:
Miscellaneous coating manufacturing
Correction, 75032
Air pollution control:
State operating permit programs—
California, 74871–74873
Air programs; approval and promulgation; State plans for designated facilities and pollutants:
Pennsylvania, 74868–74871
Air quality implementation plans; approval and promulgation; various States:
Tennessee, 74866–74868

PROPOSED RULES
Air pollution control:
State operating permit programs—
California, 74907
Air quality planning purposes; designation of areas:
Various States; correction, 75032
Solid wates:
Recyclable hazardous secondary materials identified as not discarded; definition revisions, 74907–74908
Water pollution; effluent guidelines for point source categories:
Concentrated aquatic animal production facilities, 75067–75105
NOTICES
Superfund; response and remedial actions, proposed settlements, etc.:
Old Colony Railroad Site, MA, 74960
T.H. Agriculture & Nutrition Co. Site, GA, 74960–74961

Federal Aviation Administration
PROPOSED RULES
Airworthiness directives:
AeroSpace Technologies of Australia Pty Ltd., 74874–74877

Federal Energy Regulatory Commission
NOTICES
Hydroelectric applications, 74958–74960
Meetings:
Florida Gas Transmission Co.; technical conference, 74960
Applications, hearings, determinations, etc.:
Californians for Renewable Energy, Inc., et al., 74952
CenterPoint Energy Gas Transmission Co., 74953
Chandeleur Pipe Line Co., 74953
Columbia Gas Transmission Corp., 74953–74954
Columbia Gulf Transmission Co., 74954
Kinder Morgan Interstate Gas Transmission LLC, 74954–74955
Midwest Independent Transmission System Operator, Inc., 74955
NewCorp Resources Electric Cooperative, Inc., 74955–74956
Northern Border Pipeline Co., 74956
Northern Natural Gas Co., 74956
Pacific Gas & Electric Co., 74956
Southwest Gas Storage Co., 74956–74957
Transcontinental Gas Pipe Line Corp., 74957–74958
Tuscarora Gas Tranmission Co., 74958

Federal Maritime Commission
NOTICES
Investigations, hearings, petitions, etc.:
National Customs Brokers & Forwarders Association of America, Inc., 74961

Federal Railroad Administration
NOTICES
Agency information collection activities; proposals, submissions, and approvals, 75020–75021

Federal Reserve System
RULES
Home mortgage disclosure (Regulation C):
Depository institutions; asset-size exemption threshold adjustment; staff commentary, 74829–74833
NOTICES
Banks and bank holding companies:
Formations, acquisitions, and mergers, 74961–74962

Fish and Wildlife Service
NOTICES
Meetings:
Service Regulations Committee, 74964–74965

Food and Nutrition Service
NOTICES
Meetings:
Dietary Guidelines Advisory Committee, 74941–74942

General Services Administration
NOTICES
Agency information collection activities; proposals, submissions, and approvals, 74962

Health and Human Services Department
See Centers for Disease Control and Prevention
See National Institutes of Health
NOTICES
Meetings:
Dietary Guidelines Advisory Committee, 74941–74942

Homeland Security Department
See Coast Guard

Housing and Urban Development Department
NOTICES
Grants and cooperative agreements; availability, etc.:
Facilities to assist homeless—
Excess and surplus Federal property, 74964

Interior Department
See Fish and Wildlife Service
See Land Management Bureau
See Minerals Management Service
See Surface Mining Reclamation and Enforcement Office
NOTICES
Meetings:
Exxon Valdez Oil Spill Trustee Council, 74964

Internal Revenue Service
RULES
Income taxes:
Substitute payments; information statements, 74847–74848
Procedure and administration:
Attorney's fees and other costs based upon qualified offers; awards, 74848–74855
NOTICES
Income taxes:
IRS e-file Program; new transmitter encryption options added; non-encrypted options to be discontinued, 75022–75023
Meetings:
Taxpayer Advocacy Panels, 75023–75024

International Trade Commission
NOTICES
Import investigations:
Ceramic station post insulators from—
Japan, 74970

Judicial Conference of the United States
NOTICES
Meetings:
Judicial Conference Advisory Committee on—
Civil Procedure Rules, 74970

Justice Department
See Prisons Bureau

RULES
DNA identification system:
DNA Analysis Backlog Elimination Act of 2000; implementation—
Qualifying Federal offenses for purposes of DNA sample collection; DNA sample collection, analysis, and indexing, 74855–74859
NOTICES
Pollution control; consent judgments:
Gallagher, William J., 74970–74971
Grant, Erwin, et al., 74971
Ponderosa Fibres of America, Inc., et al., 74971

Labor Department
See Employment and Training Administration
See Employment Standards Administration
See Mine Safety and Health Administration

Land Management Bureau
NOTICES
Meetings:
Canyons of the Ancients National Monument Advisory Committee, 74965
Withdrawal and reservation of lands:
Nevada, 74965–74968

Minerals Management Service
NOTICES
Agency information collection activities; proposals, submissions, and approvals, 74968–74970

Mine Safety and Health Administration
NOTICES
Safety standard petitions:
Kingwood Mining Co., LLC, et al, 74983

National Aeronautics and Space Administration
NOTICES
Meetings:
Advisory Council
Planetary Protection Advisory Committee, 74983–74984
Aerospace Safety Advisory Panel, 74984
Aviation Safety Reporting System Subcommittee, 74984

National Archives and Records Administration
NOTICES
Agency information collection activities; proposals, submissions, and approvals, 74984–74986

National Foundation on the Arts and the Humanities
NOTICES
Meetings; Sunshine Act, 74986

National Highway Traffic Safety Administration
PROPOSED RULES
Fuel economy standards:
Corporate Average Fuel Economy Program, 74908–74931
Corporate Average Fuel Economy Program; product plan information request, 74931–74939

National Institutes of Health
NOTICES
Meetings:
National Heart, Lung, and Blood Institute, 74963
National Institute of Child Health and Human Development, 74964
National Institute on Drug Abuse, 74963–74964

National Oceanic and Atmospheric Administration
PROPOSED RULES
Fishery conservation and management:
Northeastern United States fisheries—
Multispecies fishery, 74939–74940
NOTICES
Agency information collection activities; proposals, submissions, and approvals, 74943–74944

Nuclear Regulatory Commission
NOTICES
Regulatory guides; issuance, availability, and withdrawal, 74989
Applications, hearings, determinations, etc.:
Envirocare of Utah, Inc., 74986–74988
Radiac Research Corp., 74988–74989

Prisons Bureau
RULES
Inmate control, custody, care, etc.:
Religious beliefs and practices, 74859–74860
PROPOSED RULES
Inmate control, custody, care, etc.:
Psychiatric treatment and medication; adminstrative safeguards, 74892–74893

Securities and Exchange Commission
RULES
Financial reporting matters:
Management's discussion and analysis of financial condition and results of operations; guidance, 75055–75065
Securities:
Registered transfer agents; recordkeeping requirements, 75049–75054
NOTICES
Meetings; Sunshine Act, 74989
Self-regulatory organizations; proposed rule changes:
American Stock Exchange, LLC, 74989–74991
Chicago Board Options Exchange, Inc., 74991–75007
International Securities Exchange, Inc., 75007–75008
New York Stock Exchange, Inc., 75008–75010
Pacific Exchange, Inc., 75010–75011
Pacific Stock Exchange, Inc., 75011–75012
Philadelphia Stock Exchange, Inc., 75012–75013
Stock Clearing Corp. of Philadelphia, 75013–75014

Small Business Administration
RULES
Small business size standards:
Information technology value added resellers, 74833–74842
Testing laboratories, 74842–74847

State Department
NOTICES
Grants and cooperative agreements; availability, etc.:
Middle East Partnership Initiative, 75014–75018
Organization, functions, and authority delegations:
Jones, Richard H.; nonimmigrants; port-of-entry special registration, fingerprinting, and photographing; exceptions, 75018–75019
Kennedy, Patrick J.; nonimmigrants; port-of-entry special registration, fingerprinting, and photographing; special exemptions, 75019

Surface Mining Reclamation and Enforcement Office
PROPOSED RULES
Surface coal mining and reclamation operations:
Ownership and control of mining operations; definitions, permit requirements, enforcement actions, etc., 75035–75048

Surface Transportation Board
NOTICES
Rail carriers:
Cost recovery procedures—
Adjustment factor, 75021
Railroad services abandonment:
Venice, IL, 75021–75022

Textile Agreements Implementation Committee
See Committee for the Implementation of Textile Agreements

Transportation Department
See Federal Aviation Administration
See Federal Railroad Administration
See National Highway Traffic Safety Administration
See Surface Transportation Board
NOTICES
Aviation proceedings:
Agreements filed; weekly receipts, 75019
Certificates of public convenience and necessity and foreign air carrier permits; weekly applications, 75019

Treasury Department
See Internal Revenue Service

Veterans Affairs Department
PROPOSED RULES
Federal claims collection standards; collection, compromise, suspension, temination, and referral of debts owed to VA, 74893–74907
NOTICES
Meetings:
Medical Research Service Merit Review Committee, 75024
Women Veterans Advisory Committee, 75024–75025
Privacy Act:
Systems of records, 75025–75032

Separate Parts In This Issue

Part II
Interior Department, Surface Mining Reclamation and Enforcement Office, 75035–75048

Part III
Securities and Exchange Commission, 75049–75054

Part IV
Securities and Exchange Commission, 75055–75065

Part V
Environmental Protection Agency, 75067–75105

Reader Aids

Consult the Reader Aids section at the end of this issue for phone numbers, online resources, finding aids, reminders, and notice of recently enacted public laws.

To subscribe to the Federal Register Table of Contents LISTSERV electronic mailing list, go to http://listserv.access.gpo.gov and select Online mailing list archives, FEDREGTOC-L, Join or leave the list (or change settings); then follow the instructions.

CFR PARTS AFFECTED IN THIS ISSUE

A cumulative list of the parts affected this month can be found in the Reader Aids section at the end of this issue.

7 CFR

Proposed Rules:

1124 74874
1131 74874

12 CFR

203 74829

13 CFR

121 (2 documents) 74833, 74842

14 CFR

Proposed Rules:

39 74874

16 CFR

Proposed Rules:

1500 74878

17 CFR

211 75056
231 75056
240 75050
241 75056

26 CFR

1 74847
301 74848

28 CFR

28 74855
548 74859

Proposed Rules:

549 74892

30 CFR

Proposed Rules:

701 75036
773 75036
774 75036
778 75036
843 75036
847 75036

32 CFR

341 74860
342 74860
348 74860
350 74860
353 74860
363 74860
364 74860
365 74860
366 74860
367A 74860
368 74860
369 74860
370 74860
373 74860
376 74860
377 74860
380 74860
381 74860
382 74860
384 74860
385 74860
386 74860
387 74860
391 74860
394 74860
396 74860
399 74860

33 CFR

165 (2 documents) 74861, 74863

38 CFR

Proposed Rules:

1 74893
2 74893

40 CFR

52 74866
62 74868
63 75033
70 74871

Proposed Rules:

70 74907
81 75033
260 74907
261 74907
451 75068

49 CFR

Proposed Rules:

533 (2 documents) 74908, 74931

50 CFR

Proposed Rules:

648 74939

Rules and Regulations

Federal Register
Vol. 68, No. 248
Monday, December 29, 2003

This section of the FEDERAL REGISTER contains regulatory documents having general applicability and legal effect, most of which are keyed to and codified in the Code of Federal Regulations, which is published under 50 titles pursuant to 44 U.S.C. 1510.

The Code of Federal Regulations is sold by the Superintendent of Documents. Prices of new books are listed in the first FEDERAL REGISTER issue of each week.

FEDERAL RESERVE SYSTEM

12 CFR Part 203

[Regulation C; Docket No. R–1178]

Home Mortgage Disclosure

AGENCY: Board of Governors of the Federal Reserve System.

ACTION: Final rule; staff commentary.

SUMMARY: The Board is publishing a final rule amending Regulation C (Home Mortgage Disclosure) and the staff commentary that interprets the requirements of Regulation C. The regulation and staff commentary are amended to conform them to changes in the Standards for Defining Metropolitan and Micropolitan Statistical Areas published by the U.S. Office of Management and Budget (OMB) in December 2000. The staff commentary also is amended to increase the asset-size exemption threshold for depository institutions based on the annual percentage change in the Consumer Price Index for Urban Wage Earners and Clerical Workers. The adjustment from $32 million to $33 million reflects the increase of that index by 2.30 percent during the twelve-month period ending in November 2003. Thus, depository institutions with assets of $33 million or less as of December 31, 2003, are exempt from data collection in 2004.

DATES: Effective January 1, 2004.

FOR FURTHER INFORMATION CONTACT: John C. Wood or Kathleen C. Ryan, Counsels, or Dan S. Sokolov, Senior Attorney, Division of Consumer and Community Affairs, at (202) 452–3667; for users of Telecommunications Device for the Deaf (TDD) only, contact (202) 263–4869.

SUPPLEMENTARY INFORMATION: The Home Mortgage Disclosure Act (HMDA; 12 U.S.C. 2801 *et seq.*) requires most mortgage lenders located in metropolitan areas to collect data about their housing-related lending activity. Annually, lenders must report that data to their federal supervisory agencies and make the data available to the public. The Board's Regulation C (12 CFR part 203) implements HMDA.

Metropolitan Statistical Areas

The Board is making revisions to Regulation C to conform it to OMB's Standards for Defining Metropolitan and Micropolitan Areas issued in December 2000 under the Metropolitan Area program (the 2000 Standards). 65 FR 82228 (December 27, 2000). The purpose of the Metropolitan Area program is to provide nationally consistent definitions for the federal government to use in collecting, tabulating, and publishing statistics for a set of geographic areas.

Regulation C has incorporated OMB's definitions of a Metropolitan Statistical Area (MSA) and a Primary Metropolitan Statistical Area (PMSA) for determining coverage under HMDA, reporting property location, providing disclosures and reports of lending activity, and posting notices about the availability of HMDA data. OMB's 1990 standards defined an MSA as an urbanized area with at least 50,000 population. *See, e.g.*, 63 FR 70526, 70531 (December 21, 1998). Large MSAs of 1 million or more population were called Consolidated Metropolitan Statistical Areas (CMSAs); CMSAs were subdivided into two or more PMSAs (generally a county or group of counties with at least 100,000 population). Regulation C provided that the relevant geographic unit was the PMSA; if the lender or the property was located in an MSA that was not large enough to be a CMSA, then the MSA was the applicable geographic unit. CMSAs were not used under HMDA.

The 2000 standards supersede OMB's 1990 standards, necessitating a change to Regulation C. Although the 2000 standards retain the concept of an MSA as an urbanized area of 50,000 or more population, the standards no longer designate areas as CMSAs and PMSAs. Instead, the 2000 standards provide that a large MSA (with a population of at least 2.5 million) is divided into ''Metropolitan Divisions.'' Each Metropolitan Division consists of one or more counties that represent an employment center within an MSA.

In June 2003, OMB released the list of MSAs and Metropolitan Divisions, Micropolitan Statistical Areas, and Combined Statistical Areas, based on the application of the 2000 standards to data from the 2000 Census. Each MSA and Metropolitan Division is assigned a 5-digit number (previously, all MSAs and PMSAs were assigned 4-digit numbers). OMB Bulletin No. 03–04, June 6, 2003. In July 2003, the FFIEC instructed lenders to use the newly released MSAs and Metropolitan Divisions for collecting and reporting HMDA data beginning January 1, 2004. *See http://www.ffiec.gov/hmda/pdf/spec2004.pdf.* Regulation C refers to the MSA and the PMSA for determining coverage under HMDA, reporting property location, providing disclosures and reports of lending activity, and posting notices about the availability of HMDA data. The MSA, and in the case of large MSAs, the Metropolitan Division, are the geographic units most analogous to MSAs and PMSAs under the 1990 standards. Thus, their use minimizes any disruption in HMDA data caused by the changes to OMB standards.

The revisions to Regulation C formalize the FFIEC's July 2003 guidance. The regulation, Appendix A, and the staff commentary are amended to use the terms ''MSA'' and ''Metropolitan Division.'' Additionally, references to obsolete Census materials have been deleted from Appendix A.

Asset Threshold

Provisions of the Economic Growth and Regulatory Paperwork Reduction Act of 1996 (codified at 12 U.S.C. 2808(b)) amended HMDA to expand the exemption for small depository institutions. Prior to 1997, HMDA exempted depository institutions with assets totaling $10 million or less, as of the preceding year-end. The statutory amendment increased the asset-size exemption threshold by requiring a one-time adjustment of the $10 million figure based on the percentage by which the Consumer Price Index for Urban Wage Earners and Clerical Workers (CPIW) for 1996 exceeded the CPIW for 1975, and provided for annual adjustments thereafter based on the annual percentage increase in the CPIW. The one-time adjustment increased the exemption threshold to $28 million for 1997 data collection.

Section 203.2(e)(1)(i) of Regulation C provides that the Board will adjust the threshold based on the year-to-year change in the average of the CPIW, not

seasonally adjusted, for each twelve-month period ending in November, rounded to the nearest million. Pursuant to this section, the Board raised the threshold to $29 million for 1998 data collection, raised it to $30 million for 1999 data collection, and kept it at that level for data collection in 2000. The Board raised the threshold to $31 million for data collection in 2001 and to $32 million for data collection in 2002; the Board kept the threshold at $32 million in 2003.

During the period ending November 2003, the CPIW increased by 2.30 percent. As a result, the exemption threshold is raised to $33 million. Thus, depository institutions with assets of $33 million or less as of December 31, 2003, are exempt from data collection in 2004. An institution's exemption from collecting data in 2004 does not affect its responsibility to report the data it was required to collect in 2003.

Final Rule

Under the Administrative Procedure Act, notice and opportunity for public comment are not required if the Board finds that notice and public comment are unnecessary. 5 U.S.C. 553(b)(3)(B). The amendments in this notice are technical. The Board is amending various provisions of the regulation and commentary to conform them to the current OMB standards that are analogous to standards used previously under HMDA. Comment 2(e)–2 to section 203.2 of the regulation is amended to implement the increase in the exemption threshold. This amendment merely applies the formula established by Regulation C for determining adjustments to the exemption threshold. For these reasons, the Board has determined that publishing a notice of proposed rulemaking and providing opportunity for public comment are unnecessary. Therefore, the amendments are adopted in final form.

List of Subjects in 12 CFR Part 203

Banks, Banking, Federal Reserve System, Mortgages, Reporting and recordkeeping requirements.

■ For the reasons set forth in the preamble, the Board amends 12 CFR part 203 as follows:

PART 203—HOME MORTGAGE DISCLOSURE (REGULATION C)

■ 1. The authority citation for part 203 continues to read as follows:

Authority: 12 U.S.C. 2801–2810.

■ 2. Section 203.2 is amended by revising paragraphs (c)(2), (e)(1)(ii), (e)(2)(ii), and (j).

§ 203.2 Definitions.

* * * * *

(c) * * *

* * * * *

(2) Any office of a for-profit mortgage-lending institution (other than a bank, savings association, or credit union) that takes applications from the public for home purchase loans, home improvement loans, or refinancings. A for-profit mortgage-lending institution is also deemed to have a branch office in an MSA or in a Metropolitan Division, if, in the preceding calendar year, it received applications for, originated, or purchased five or more home purchase loans, home improvement loans, or refinancings related to property located in that MSA or Metropolitan Division, respectively.

* * * * *

(e) * * *

(1) * * *

(ii) On the preceding December 31, had a home or branch office in an MSA;

* * * * *

(2) a for-profit mortgage-lending institution (other than a bank, savings association, or credit union) that:

* * * * *

(ii) On the preceding December 31, had a home or branch office in an MSA; and

* * * * *

(j)(1) Metropolitan Statistical Area or MSA means a metropolitan statistical area as defined by the U.S. Office of Management and Budget.

(2) Metropolitan Division or MD means a metropolitan division of an MSA, as defined by the U.S. Office of Management and Budget.

* * * * *

■ 3. Section 203.4 is amended by revising paragraphs (a)(9) and (e).

§ 203.4 Compilation of loan data.

(a) * * *

(9) The location of the property to which the loan or application relates, by MSA or by Metropolitan Division, by state, by county, and by census tract, if the institution has a home or branch office in that MSA or Metropolitan Division.

* * * * *

(e) *Data reporting for banks and savings associations that are required to report data on small business, small farm, and community development lending under CRA.* Banks and savings associations that are required to report data on small business, small farm, and community development lending under regulations that implement the Community Reinvestment Act of 1977 (12 U.S.C. 2901 *et seq.*) shall also collect the location of property located outside MSAs and Metropolitan Divisions in which the institution has a home or branch office, or outside any MSA.

■ 4. Section 203.5 is amended by revising paragraphs (b)(3)(i) and (ii), (c), (e), and (f):

§ 203.5 Disclosure and reporting.

* * * * *

(b) * * *

(3) In addition, an institution shall either:

(i) Make its disclosure statement available to the public, within ten business days of receiving it, in at least one branch office in each other MSA and each other Metropolitan Division where the institution has offices (the disclosure statement need only contain data relating to the MSA or Metropolitan Division where the branch is located); or

(ii) Post the address for sending written requests in the lobby of each branch office in other MSAs and Metropolitan Divisions where the institution has offices; and mail or deliver a copy of the disclosure statement within fifteen calendar days of receiving a written request (the disclosure statement need only contain data relating to the MSA or Metropolitan Division for which the request is made). Including the address in the general notice required under paragraph (e) of this section satisfies this requirement.

* * * * *

(c) *Public disclosure of modified loan/application register.* A financial institution shall make its loan/application register available to the public after removing the following information regarding each entry: the application or loan number, the date that the application was received, and the date action was taken. An institution shall make its modified register available following the calendar year for which the data are compiled, by March 31 for a request received on or before March 1, and within thirty calendar days for a request received after March 1. The modified register need only contain data relating to the MSA or Metropolitan Division for which the request is made.

* * * * *

(e) *Notice of availability.* A financial institution shall post a general notice about the availability of its HMDA data in the lobby of its home office and of each branch office located in an MSA and Metropolitan Division. An institution shall provide promptly upon request the location of the institution's offices where the statement is available

for inspection and copying, or it may include the location in the lobby notice.

(f) *Loan aggregation and central data depositories.* Using the loan data submitted by financial institutions, the FFIEC will produce reports for individual institutions and reports of aggregate data for each MSA and Metropolitan Divison, showing lending patterns by property location, age of housing stock, and income level, sex, ethnicity, and race. These reports will be available to the public at central data depositories located in each MSA and Metropolitan Division. A listing of central data depositories can be obtained from the Federal Financial Institutions Examination Council, Washington, DC 20006.

■ 5. Appendix A to Part 203 is amended by:

■ a. Revising Paragraph I.A.6.c. introductory text.

■ b. Revising Paragraph I.C

■ c. Revising Paragraphs I.C.1., 3., 4., 5., and 6.

■ d. Revising the Loan/Application Register.

Appendix A to Part 203—Form and Instructions for Completion of HMDA Loan/Application Register

I. * * *

A. * * *

6. * * *

* * * * *

Code 3—Not applicable

* * * * *

c. Use Code 3 if the property to which the loan relates is a multifamily dwelling; is not located in an MSA; or is located in an MSA or an MD in which your institution has neither a home nor a branch office. Alternatively, at your institution's option, you may report the actual occupancy status, using Code 1 or 2 as applicable.

* * * * *

C. Property Location. Except as otherwise provided, enter in these columns the applicable codes for the MSA, or the MD if the MSA is divided into MDs, state, county, and census tract to indicate the location of the property to which a loan relates.

1. *MSA or Metropolitan Division.* For each loan or loan application, enter the MSA, or the MD number if the MSA is divided into MDs. MSA and MD boundaries are defined by OMB; use the boundaries that were in effect on January 1 of the calendar year for which you are reporting. A listing of MSAs and MDs is available from your supervisory agency or the FFIEC.

* * * * *

3. *Census Tract.* Indicate the census tract where the property is located. Notwithstanding paragraph 6, if the property is located in a county with a population of 30,000 or less in the 2000 Census, enter ''NA'' (even if the population has increased above 30,000 since 2000), or enter the census tract number. County population data can be obtained from the U.S. Census Bureau.

4. *Census Tract Number.* For the census tract number, consult the resources provided by the U.S. Census Bureau or the FFIEC.

5. *Property Located Outside MSAs or Metropolitan Divisions.* For loans on property located outside the MSAs and MDs in which an institution has a home or branch office, or for property located outside of any MSA or MD, the institution may choose one of the following two options. Under option one, the institution may enter the MSA or MD, state and county codes and the census tract number; and if the property is not located in any MSA or MD, it may enter ''NA'' in the MSA or MD column. (Codes exist for all states and counties and numbers exist for all census tracts.) Under this first option, the codes and census tract number must accurately identify the property location. Under the second option, which is not available if paragraph 6 applies, an institution may enter ''NA'' in all four columns, whether or not the codes or numbers exist for the property location.

6. *Data Reporting for Banks and Savings Associations Required to Report Data on Small Business, Small Farm, and Community Development Lending Under the CRA Regulations.* If your institution is a bank or savings association that is required to report data under the regulations that implement the CRA, you must enter the property location on your HMDA/LAR even if the property is outside the MSAs or MDs in which you have a home or branch office, or is not located in any MSA.

* * * * *

BILLING CODE 6210–01–P

LOAN/APPLICATION REGISTER Page___of___

Name of Reporting Institution _____ City, State, ZIP _____

All columns (except Reasons for Denial) must be completed for each entry. See the instructions for details.

Form FR HMDA–LAR

Reporter's Identification Number _____ Agency Code ___

Application or Loan Information								Action Taken		Property Location				Applicant Information A = Applicant CA = Co-Applicant									Other Data		
														Ethnicity		Race		Sex							
Application or Loan Number	Date Application Received (mm/dd/ccyy)	Loan Type	Property Type	Purpose	Owner Occupancy	Loan Amount in Thousands	Preapproval	Type	Date (mm/dd/ccyy)	Five-Digit MSA/MD Number	Two-Digit State Code	Three-Digit County Code	Six-Digit Census Tract	A	CA	A	CA	A	CA	Gross Annual Income in thousands	Type of Purchaser of Loan	Reasons for Denial (optional)	Rate Spread	HOEPA Status	Lien Status
Example of Loan Originated Following Preapproval																									
LB-687439	01/15/2004	1	1	1	1	65	1	1	02/22/2004	47894	51	059	421985	2	5	35	8	1	5	24	7		NA	2	1
Example of Preapproval Request Denied																									
567890432 1-123409876 5	06/01/2004	1	1	1	1	125	1	7	06/20/2004	NA	NA	NA	NA	2	2	3	2	1	2	40	0	1,3	NA	2	1
Example of Application Denied Following Preapproval																									
0123456789-987654321 0	03/20/2004	1	1	1	1	50	1	3	04/30/2004	11500	01	015	0021.00	1	1	5	3	2	1	30	0	4,5	NA	2	1

BILLING CODE 6210–01–C

3. In Supplement I to part 203:

a. Under section 203.2 Definitions, *2(c) Branch Office,* paragraphs 2. and 3. are revised.

b. Under section 203.2 Definitions, *2(e) Financial Institution,* paragraph 2. is revised.

c. Under section 203.2 Definitions, a new paragraph title *2(j) Metropolitan Statistical Areas and Metropolitan Divisions* is added, and a new paragraph 1. is added.

d. Under section 203.4 Compilation of Loan Data, *4(a)(9) Property Location,* paragraph 3. is revised.

e. Under section 203.5 Disclosure and Reporting, *5(a) Reporting to Agency,* paragraphs 4. and 8. are revised.

Supplement I to Part 203—Staff Commentary

Section 203.2 Definitions

* * * * *

2(c) *Branch office.*

* * * * *

2. *Depository institution.* A branch of a depository institution does not include a loan-production office, the office of an affiliate, or the office of a third party such as a loan broker. (But see Appendix A, paragraph I.C.6, which requires certain depository institutions to report property location even for properties located outside those MSAs or Metropolitan Divisions in which the institution has a home or branch office.)

3. *Nondepository institution.* For a nondepository institution, ''branch office'' does not include the office of an affiliate or other third party such as a loan broker. (But note that certain nondepository institutions must report property location even in MSAs or Metropolitan Divisions where they do not have a physical location.)

* * * * *

2(e) Financial Institution

* * * * *

2. *Adjustment of exemption threshold for depository institutions.* For data collection in 2004, the asset-size exemption threshold is $33 million. Depository institutions with assets at or below $33 million are exempt from collecting data for 2004.

* * * * *

2(j) Metropolitan Statistical Areas and Metropolitan Divisions

1. *Use of terms ''Metropolitan Statistical Area'' and ''Metropolitan Division.''* The U.S. Office of Management and Budget defines Metropolitan Statistical Areas and Metropolitan Divisions to provide nationally consistent definitions for collecting, tabulating, and publishing Federal statistics for a set of geographic areas. OMB divides every Metropolitan Statistical Area (MSA) with a population of 2.5 million or more into Metropolitan Divisions (MDs); MSAs with populations under 2.5 million population are not so divided. 67 FR 82228 (December 27, 2000). For all purposes under Regulation C, if an MSA is divided by OMB into MDs, the appropriate geographic unit to be used is the MD; if an MSA is not so divided by OMB into MDs, the appropriate geographic unit to be used is the MSA.

* * * * *

Section 203.4 Compilation of Loan Data

* * * * *

4(a)(9) Property location.

* * * * *

3. *Property location—loans purchased from another institution.* The requirement to report the property location by census tract in an MSA or Metropolitan Division where the institution has a home or branch office applies not only to loan applications and originations but also to loans purchased from another institution. This includes loans purchased from an institution that did not have a home or branch office in that MSA or Metropolitan Division and did not collect the property-location information.

* * * * *

Section 203.5 Disclosure and Reporting

5(a) Reporting to Agency

* * * * *

4. *Options for collection.* An institution may collect data on separate registers at different branches, or on separate registers for different loan types (such as for home purchase or home improvement loans, or for loans on multifamily dwellings). Entries need not be grouped on the register by MSA or Metropolitan Division, or chronologically, or by census tract numbers, or in any other particular order.

* * * * *

8. *Transmittal sheet—revisions or deletions.* If a data submission involves revisions or deletions of previously submitted data, it must state the total of all line entries contained in that submission, including both those representing revisions or deletions of previously submitted entries, and those that are being resubmitted unchanged or are being submitted for the first time. Depository institutions must provide a list of the MSAs or Metropolitan Divisions in which they have home or branch offices.

* * * * *

By order of the Board of Governors of the Federal Reserve System, acting through the Director of the Division of Consumer and Community Affairs under delegated authority, December 18, 2003.

Jennifer J. Johnson,

Secretary of the Board.

[FR Doc. 03–31694 Filed 12–24–03; 8:45 am]

BILLING CODE 6210–01–P

SMALL BUSINESS ADMINISTRATION

13 CFR Part 121

RIN 3245–AE80

Small Business Size Standards; Information Technology Value Added Reseller

AGENCY: U.S. Small Business Administration (SBA).

ACTION: Final rule.

SUMMARY: The U.S. Small Business Administration (SBA) is establishing a new industry category and size standard of 150 employees for Information Technology Value Added Resellers under the industry of Other Computer Related Services, North American Industry Classification System industry code 541519. This industry category and size standard is being established to better apply small business eligibility requirements under Federal contracts that combine substantial services with the acquisition of computer hardware and software.

DATES: This rule is effective on January 28, 2004.

FOR FURTHER INFORMATION CONTACT: Gary Jackson, Assistant Administrator for Size Standards, at (202) 205–6464 or *sizestandards@sba.gov.*

SUPPLEMENTARY INFORMATION: On July 24, 2002, the SBA proposed to establish a size standard for businesses described as Information Technology Value Added Resellers (ITVAR) (67 FR 48419). Under the North American Industry Classification System (NAICS), value added resellers are classified in the Wholesale Trade Sector along with merchant wholesalers, distributors, drop shippers, brokers, and agents. For purposes of Federal contracting, a wholesale trade firm that provides supplies to the Federal Government that it did not manufacturer is small if it, including its affiliates, has not more than 500 employees. The SBA proposed to retain the 500 employee size standard applicable to value added resellers and other wholesale trade nonmanufacturers for the proposed industry category of ITVARs.

In response to a large number of comments objecting to the 500 employee size standard for ITVAR, the SBA reassessed its decision to retain the nonmanufacturer size standard for this new industry category. As described below, the SBA has decided to establish a size standard of 150 employees for ITVARs. This decision is based on a review of the comments received to the proposed rule and an analysis of the characteristics of firms in the computer services and wholesale trade industries that are engaged in providing services along with information technology (IT) equipment. Below is a discussion of the comments received on the proposed rule and the size standard analysis.

Discussion of Comments

The SBA received 291 timely comments on the proposed rule. Two hundred and seventy six comments

(94.8%) opposed the 500 employee size standard for ITVAR. Twelve comments (4.1%) supported the proposed size standard. The remaining three comments either supported a higher size standard or addressed other issues related to the proposed rule.

Comments Opposing the Proposal

More than three-fourths of the 276 comments that strongly objected to the proposed ITVAR size standard submitted an identical or very similar comment. These comments stated that the average size of an ITVAR is 15 employees and 88% have 100 or fewer employees, based on data from the SBA and from a survey conducted by Computer News Reseller titled ''State of the Market 2002 Research.'' Based on these facts, the comments contended that a 500 employee size standard is inconsistent with the Small Business Act and the foundation of the SBA. These comments further recommended that SBA also adopt a 100 employee size standard for nonmanufacturers under the industry of Computer and Computer Peripheral Equipment and Software Merchant Wholesalers, NAICS 423430 (formally NAICS 421430).

The other comments opposing the proposed ITVAR size standard cited similar data on ITVARs to argue that businesses with up to 500 employees are not small businesses in this industry and provided additional reasons for their position. Many of these comments argued that smaller IT businesses are not competitive against businesses with several hundred employees. Although smaller ITVARs may be competitive in terms of quality and service, the low margins in the industry make them uncompetitive with larger resellers. Under the proposed size standard, they argued that Federal agencies would tend to award contracts to the larger small businesses at the expense of much smaller businesses. Several comments considered a 500 employee ITVAR to be dominant in this field, and therefore, does not meet the Small Business Act's statutory definition of a small business which excludes dominant businesses as small (*see* 15 U.S.C. 632(a)(1)). Several comments also criticized the 500 employee size standard as merely an attempt to help Federal agencies to achieve their small business goals.

Comments Supporting the Proposal

The 12 comments supporting the proposed ITVAR size standard gave several reasons for their position. Many of these comments noted that many firms outgrow the $21 million receipts-based IT industry size standards because a sizable proportion of receipts on Federal contracts are for the purchase of hardware and software from manufacturers rather than strictly for services performed by ITVAR firms. Related to this point, one comment stated that the proposed ITVAR size standard allows larger small businesses to continue to operate in an industry category after they outgrow other IT industry size standards. Another comment supported the proposed size standard by comparing the activities of value added resellers with small businesses that function as an order processing or clearing house for the resale of computer and related products. The comment contended that small businesses that provide staff involved in engineering, re-configuration, systems integration, and turnkey operations must have a large number of employees to perform these functions and to grow to compete with large businesses. One of the supporting comments also recommended adding a receipts-size standard of $50 million with the proposed 500 employee size standard to prevent large businesses from qualifying as small.

Comments on establishing an ITVAR Industry Category

The SBA received seven comments on the issue of establishing an industry category for ITVAR. All seven commented in support of the new category. Three of these were from comments that opposed the 500 employee size standard. One comment recommended changing the proposed service percentage range of 15% to 50% of contract value in the ITVAR definition to a range of 0% to 100% since contracts exclusively for hardware also include an implicit services component that contractors will provide to their customers.

The SBA's Response to Comments

The SBA agrees that 500 employees is not an appropriate size standard for ITVARs. As the comments pointed out, a large number of firms engaged in this activity are much smaller than 500 employees. A business can enter into the ITVAR industry at a relatively small size and grow into a highly competitive business well before it reaches 500 employees. The reasons given for comments in support of the proposed size standard support focused on being eligible as small businesses for large-sized contracts after firms have grown beyond the $21 million computer services size standard.

While the SBA agrees that a size standard lower than 500 employees should be adopted, it does not agree that 100 employees is the appropriate size standard. The reasons provided by those comments focused on the average employee size of ITVARs and the percent of ITVARs with 100 or fewer employees. As described more fully below, the SBA considers several industry characteristics to assess a size standard for an industry. Average firm size is one industry factor, which is compared to the average size firm in other industries. The percent of industry firms at various sizes is not used. This factor is not as useful as other industry characteristics in assessing a size standard. The statistic is overwhelmingly driven by the concentration of firms with only a few employees. These firms have much turnover and account for an insignificant proportion of industry employment and receipts. For example, ITVARs with less than five employees comprise 71% of industry firms but account for between 6% to 7% of industry employment and sales. A more useful measure to assess the economic significance of firms of varying sizes in an industry is the distribution of industry receipts by firm size. Data on this characteristic is discussed in the size standard analysis below.

Based on a review of ITVAR industry characteristics, the SBA is adopting a 150 employee size standard, which it believes more sufficiently considers the overall characteristics of the types of firms engage in ITVAR activities. In addition, 150 employees is equivalent to the average number of employees of firms under the $21 million size standard for computer services (NAICS 5415 industry group). Since firms in these industries also act as ITVARs, the SBA believes that it is beneficial to firms in these industries to have a consistent size standard, even though the size standard measures differ. As discussed as options in the proposed rule, the SBA considered proposing the $21 million receipts size standard and an employee equivalent of 150 employees. An employee size standard is considered a better measure of the size of ITVARs operation than receipts since a substantial proportion of their receipts merely reflect the dollar value of equipment and software sold.

The SBA does not agree with the comment recommending changing the percentage of services that must be present in an ITVAR contract range from 0% to 100%. It is unlikely that a contract for computer equipment would later include a significant amount of services. As explained in the proposed rule, the purpose of the ITVAR industry category is to treat computer contracts with a meaningful amount of computer services, but where the majority of

contract dollars consists as equipment, in the same manner as other computer services contracts. Removing the requirement for a specific percentage of services defeats the purpose of the rule and would unintentionally change the size standards applicable to nonmanufacturers of computer equipment and for computer services.

Size Standards Methodology: Congress granted the SBA discretion to establish detailed size standards (15 U.S.C. 632(a)(2)). The SBA's Standard Operating Procedure (SOP) 90 01 3, ''Size Determination Program'' (available on SBA's Web site at *http:/ www.sba.gov/library/soproom.html*) sets out four categories for establishing and evaluating size standards: (1) The structure of the industry and its various economic characteristics; (2) the SBA program objectives and the impact of different size standards on these programs; (3) whether a size standard successfully excludes those businesses which are dominant in the industry; and (4) other factors if applicable. Other factors, including the impact on other agencies' programs, may come to the attention of the SBA during the public comment period or from the SBA's own research on the industry. No formula or weighting has been adopted so that the factors may be evaluated in the context of a specific industry. Below is a discussion of the SBA's analysis of the economic characteristics of an industry, the impact of a size standard on SBA programs, and the evaluation of whether a firm at or below a size standard could be considered dominant in the industry under review.

Industry Analysis: Section 3(a)(3) of the Small Business Act (15 U.S.C. 632 (a)(3)), requires that size standards vary by industry to the extent necessary to reflect differing industry characteristics. SBA has two ''base'' or ''anchor'' size standards that apply to most industries—500 employees for manufacturing industries and $6 million in average annual receipts for nonmanufacturing industries. SBA established 500 employees as the anchor size standard for the manufacturing industries at SBA's inception in 1953 and shortly thereafter established a $1 million average annual receipts size standard for the nonmanufacturing industries. The receipts-based anchor size standard for the nonmanufacturing industries was adjusted periodically for inflation so that, currently, the anchor size standard is $6 million. Anchor size standards are presumed to be appropriate for an industry unless its characteristics indicate that larger firms have a much greater significance within that industry than the ''typical industry.''

When evaluating a size standard, the characteristics of the specific industry under review are compared to the characteristics of a group of industries, referred to as a comparison group. A comparison group is a large number of industries grouped together to represent the typical industry. It can be comprised of all industries, all manufacturing industries, all industries with receipt-based size standards, or some other logical grouping.

If the characteristics of a specific industry are similar to the average characteristics of the comparison group, then the anchor size standard is considered appropriate for the industry. If the specific industry's characteristics are significantly different from the characteristics of the comparison group, a size standard higher or, in rare cases, lower than the anchor size standard may be considered appropriate. The larger the differences between the specific industry's characteristics and the comparison group's characteristics, the larger the difference between the appropriate industry size standard and the anchor size standard. SBA will consider adopting a size standard below the anchor size standard only when (1) all or most of the industry characteristics are significantly smaller than the average characteristics of the comparison group, or (2) other industry considerations strongly suggest that the anchor size standard would be an unreasonably high size standard for the industry under review.

The primary evaluation factors that the SBA considers in analyzing the structural characteristics of an industry are listed in 13 CFR 121.102 (a) and (b). Those factors include average firm size, distribution of firms by size, start-up costs, and industry competition. The analysis also examines the possible impact of a size standard revision on SBA's programs. The SBA generally considers these five factors to be the most important evaluation factors in establishing or revising a size standard for an industry. However, it will also consider and evaluate other information that it believes relevant to the decision on a size standard for a particular industry. Public comments submitted on proposed size standards are also an important source of additional information that the SBA closely reviews before making a final decision on a size standard. Below is a brief description of each of the five evaluation factors.

1. ''Average firm size'' is simply total industry receipts (or number of employees) divided by the number of firms in the industry. If the average firm size of an industry is significantly higher than the average firm size of a comparison industry group, this fact would be viewed as supporting a size standard higher than the anchor size standard. Conversely, if the industry's average firm size is similar to or significantly lower than that of the comparison industry group, it would be a basis to adopt the anchor size standard or, in rare cases, a lower size standard.

2. ''Distribution of firms by size'' is the proportion of industry receipts, employment, or other economic activity accounted for by firms of different sizes in an industry. If the preponderance of an industry's economic activity is by smaller firms, this tends to support adopting the anchor size standard. A size standard higher than the anchor size standard is supported for an industry in which the distribution of firms indicates that economic activity is concentrated among the largest firms in an industry. In this rule, SBA is comparing the size of firms within an industry to the size of firms in the comparison group at which predetermined percentages of receipts are generated by firms smaller than a particular size firm. For example, assume for the industry under review that 50% of total industry receipts are cumulatively generated by firms of 200 employees and less. This contrasts with the comparison group (composed of industries with the nonmanufacturing anchor size standard of $6 million) in which firms of 64 employees and less cumulatively generated 50% of total industry receipts. Viewed in isolation, the higher figure for the industry under review suggests that a size standard higher than the nonmanufacturing anchor size standard may be warranted. Other size distribution comparisons in the industry analysis include 40%, 60%, and 70%, as well as the 50% comparison discussed above.

3. ''Start-up costs'' affect a firm's initial size because entrants into an industry must have sufficient capital to start and maintain a viable business. To the extent that firms entering into one industry have greater financial requirements than firms in other industries, the SBA is justified in considering a higher size standard. In lieu of direct data on start-up costs, the SBA uses a proxy measure to assess the financial burden for entry-level firms. For this analysis, the SBA has calculated nonpayroll costs per establishment for each industry. This is derived by first calculating the percentage of receipts in an industry that is either retained or expended on costs other than payroll costs. (The

figure comprising the numerator of this percentage is mostly composed of capitalization costs, overhead costs, materials costs, and the costs of goods sold or inventoried.) This percentage is then applied to average establishment receipts to arrive at nonpayroll costs per establishment (an establishment is a business entity operating at a single location). An industry with a significantly higher level of nonpayroll costs per establishment than that of the comparison group is likely to have higher start-up costs, which would tend to support a size standard higher than the anchor size standard. Conversely, if the industry showed significantly lower nonpayroll costs per establishment when compared to the comparison group, the anchor size standard would be considered the appropriate size standard.

4. ''Industry competition'' is assessed by measuring the proportion or share of industry receipts obtained by firms that are among the largest firms in an industry. In this final rule, the SBA compares the proportion of industry receipts generated by the four largest firms in the industry—generally referred to as the ''four-firm concentration ratio''—with the average four-firm concentration ratio for industries in the comparison groups. If a significant proportion of economic activity within the industry is concentrated among a few relatively large producers, the SBA tends to set a size standard relatively higher than the anchor size standard in order to assist firms in a broader size range to compete with firms that are larger and more dominant in the industry. In general, however, the SBA does not consider this to be an important factor in assessing a size standard if the four-firm concentration ratio falls below 40% for an industry under review.

5. ''Impact of a size standard revision on the SBA programs'' refers to the possible impact a size standard change may have on the level of small business assistance. This assessment most often focuses on the proportion or share of Federal contract dollars awarded to small businesses in the industry in question. In general, the lower the share of Federal contract dollars awarded to small businesses in an industry which receives significant Federal contracting revenues, the greater is the justification for a size standard higher than the existing one.

Another factor to evaluate the impact of a proposed size standard on the SBA's programs is the volume of guaranteed loans within an industry and the size of firms obtaining those loans. This factor is sometimes examined to assess whether the current size standard may be restricting the level of financial assistance to firms in that industry. If small businesses receive significant amounts of assistance through these programs, or if the financial assistance is provided mainly to small businesses much lower than the size standard, a change to the size standard (especially if it is already above the anchor size standard) may not be necessary.

Evaluation of Industry Size Standard: The SBA reviewed data on firms in two industry categories to evaluate a size standard for ITVARs. Most ITVARs operate either in the Computer Systems Design and Related Services industry group (NAICS 5415) or in the Computer and Computer Peripheral Equipment and Software Merchant Wholesalers industry (NAICS 423430, formally code 421430). Instead of equally combining the data from these two industries, the SBA adjusted the data by the proportion of sales of firms that provide both services and equipment. Data from the U.S. Bureau of the Census show that firms in the Computer Systems Design and Related Services industry that provide both services and equipment generate 23% of total industry receipts (*see Sources of Receipts or Revenue,* 1997 Economic Census, Professional, Scientific, and Technical Services, Subject Series, EC975545–LS, U.S. Bureau of the Census, August 2000). In the Computer and Computer Peripheral Equipment and Software Merchant Wholesalers industry, firms providing both equipment and services (service contracts, installing computers, and sales of integrated systems) generate 14% of total industry sales from these and all other activities (*see Commodity Line Sales,* 1997 Economic Census Wholesale Trade, Subject Series, EC97W425–LS, U.S. Bureau of the Census, August 2000). The results of combining the two industries are evaluated using the SBA's size standards methodology described above.

The SBA is aware of ITVAR data from private sector sources. The SBA considered these data but decided not to use them for three reasons. First, it is unclear whether the private sector data collected include the receipts and employees of affiliates. Second, whether the data separately show the receipts and employees of all industry activities and from just ITVAR activities. These are key conceptual features of the Census Bureau data that the SBA relies upon to evaluate size standard. Without taking those factors into consideration, misleading data on firm size may be relied upon. Third, private sector data usually consist of a limited sample that tends to miss smaller sized firms. Given these uncertainties, the SBA decided to assess the Census Bureau data.

Tables 1 and 2 below show the structural characteristics for the derived ITVAR industry and for two size standards comparison groups. The first comparison group is comprised of all industries with a $6 million receipts-based size standard, referred to as the ''nonmanufacturing anchor group.'' A firm with $6 million in receipt size in these industries has, on average, 65 employees. SBA assumes that this size standard is appropriate for a nonmanufacturing industry. This is the most logical set of industries to group to assess whether the anchor size standard is appropriate. The second comparison group consists of the nonmanufacturing industries with the highest receipt-based size standards established by the SBA. The SBA refers to this comparison group as the ''nonmanufacturing higher-level size standard group.'' This group's size standards range from $21 million to $30 million. Firms within this size range average in size between 165 employees to 230 employees. If an industry's characteristics are significantly larger than those of the nonmanufacturing anchor group, the SBA will compare them to the characteristics of the higher-level size standards group. By doing so, the SBA can assess whether a size standard should be among the highest size standards or somewhere between the anchor size standard and the highest size standards.

Industry Structure Considerations: Table 1 lists three evaluation factors for the ITVAR industry and the two size standards comparison groups. These include two measures of average firm size and start-up costs (as measured by nonpayroll receipts per establishment), and the four-firm concentration ratio.

TABLE 1.—INDUSTRY CHARACTERISTICS OF THE ITVARS INDUSTRY, THE NONMANUFACTURING ANCHOR GROUP AND HIGHER-LEVEL SIZE STANDARD GROUP

Category	Average firm size		Start-up Costs		Four-firm concentration ratio (percentage)
	Receipts (millions)	Employees	Non-payroll receipts per establishment (millions)	Employee equivalent	
IT value added reseller	$3.47	14	$2.42	10	18.3
Nonmanufacturing anchor group	0.95	11	0.56	6	14.4
Higher-level size standard group	4.60	21	1.80	14	26.7

The average employment size of an ITVAR of 14 employees is about the same as for the nonmanufacturer anchor group level of 11 employees. In terms of average receipts size, ITVARs average receipts size are more than triple that of the nonmanufacturer anchor group's average receipts size. This difference reflects the larger proportion of equipment sales by ITVARs than by firms in other nonmanufacturing industries. Since the size standard under consideration is based on number of employees, the evaluation of this factor will not be based on average receipts size, but is shown for information. The average firm size of ITVARs is two-thirds of the higher size standards group's average employment firm size of 21 employees. Based on the ratio between the ITVAR's and the two comparison groups' average firm size, a size standard at or slightly above the nonmanufacturer level is supportable, or between 65 to 100 employees.

The nonpayroll receipts per establishment indicator is a measurement of entry barriers. Based on this measure, start-up costs for ITVARs are almost five times larger than those of the nonmanufacturer group and about one-third of the higher-level size standard group. As with the average firm size factor, the receipts levels are misleading when considering an employee size standard. To make this measure more useful, the receipts levels were adjusted by the sales per employee for each industry category to show what number of employees it would take, on average, to earn those levels of receipts. This conversion shows that ITVARs with 10 employees generate the estimated average nonpayroll receipts per establishment. This level falls in the middle between the employment sizes calculated for the nonmanufacturer anchor and higher size standards comparison groups, 6 and 14, employees, respectively. This industry characteristic supports a size standard between the nonmanufacturer anchor and higher size standard group levels, or between 100 to 125 employees.

The ITVAR industry's four-firm concentration ratio is estimated to be 18.3%. This is derived from a weighted average of the four-firm concentration ratios of 23% for the Computer and Computer Peripheral Equipment and Software Merchant Wholesalers industry (NAICS 423430, formally code 4421430) and 15.5% for the Computer Systems Design and Related Services industry group (NAICS 5415). A ratio of 18.3% indicates that a small number of businesses do not dominate this industry. As discussed earlier in the description of the size standards methodology, this is not an important factor in assessing a size standard when the four-firm concentration ratio is below 40%.

Table 2 below shows data on the distribution of receipts by firm employment size. For this factor, the SBA is evaluating the cumulative size of firm that accounts for predetermined percentages of total industry receipts (40%, 50%, 60%, and 70%). The table shows firms up to a specific employment size, along with all other smaller firms, account for a specific percentage of total industry receipts.

TABLE 2.—PERCENT OF RECEIPTS BY FIRM SIZE OF THE ITVARS INDUSTRY, THE NONMANUFACTURING ANCHOR GROUP, AND THE HIGHER-LEVEL SIZE STANDARD GROUP

[Number of employees]

Category	Size of firm at 40%	Size of firm at 50%	Size of firm at 60%	Size of firm at 70%
IT Value Added Reseller	250	1,000	>2,500	>2,500
Nonmanufacturing Anchor Group	35	64	130	307
Higher-level Size Standard Group	188	391	1,051	>2,500

The ITVAR industry consists of firms many times larger than firms in the nonmanufacturing anchor group. ITVARs with 250 employees and less obtained 40% of the industry's total receipts whereas firms of 35 employees and less in the nonmanufacturing anchor group obtained 40% of the industry's total receipts. For the other size distribution percentages, ITVARs more than 15 times the size of the firms in the nonmanufacturing anchor group. These data support an ITVAR size standard significantly above the anchor nonmanufacturing level of 65 employees.

Relative to the higher-level size standards group, ITVARs that obtained 40% of industry sales were approximately one-third larger than the size of firms that cumulatively obtained 40% of industry receipts in the higher-level size standard group (250 employees and 188 employees, respectively). The size of ITVARs is more than twice the size of firms for the higher-level size standard group at the 50% and 60% levels. At the 70% level, firms of at least 2,500 employees and less cumulatively captured that proportion of industries sales for the ITVAR industry and the higher-level size standard group. The analysis of

these distributions of receipts support a size standard no less than the highest employee-equivalent size standard of the higher-size standards group and up to about twice that level, or between 230 to 400 employees.

SBA Program Considerations: As part of the review of a size standard, the SBA reviews how a change might impact its programs. Most of the impact of a change to the ITVAR size standard will occur in Federal contracting. Data are not collected on Federal contracts designated as ITVAR contracts. These types of contracts are reported in several industry categories. For purposes of the ITVAR size standard analysis, the SBA sorted data by NAICS codes and the Federal Procurement Data Center's (FPDC) Product and Service (PCS) codes to assess small business participation in Federal contracting. Under the existing size standards, an ITVAR contract is classified under a NAICS manufacturing code since the majority of the dollar value of an ITVAR contract (as defined in the proposed rule) is for computer equipment. Some of these contracts, however, are also classified under a wholesale trade code, albeit improperly. The SBA examined contracts awarded during fiscal years 2001–02 in three NAICS industries—Electronic Computer Manufacturing (NAICS 334111), Other Computer Peripheral Equipment Manufacturing (NAICS 334119), and Computer and Computer Peripheral Equipment and Software (NAICS 421430). From these contracts, ITVAR contracts were identified as those that the contracting agency had also designated the services PSC of ''Automatic Data Processing and Telecommunication Services'' (PSC codes D301 through D399). The resulting list of contracts therefore consisted primarily of computer equipment but also require related services to be performed by the contractor.

The SBA recognizes that this set of Federal contracting data only approximates Federal ITVAR contracting. However, the types of contracts identified capture the types of activities described by the ITVAR size standard description. Also, the large volume of contracting identified by the SBA's approach ($925.7 million) is highly likely to capture significant trends in small business participation. For these two considerations, the SBA believes that data are sufficient to assist in evaluating an ITVAR size standard.

Table 3 shows the amount of estimated ITVAR Federal contracting for fiscal years 2001–02.

TABLE 3.—FEDERAL CONTRACTS FOR INFORMATION TECHNOLOGY VALUE ADDED RESELLERS, FISCAL YEARS 2001–02

Fiscal year	Actions			Dollars		
	Total	Small business	Percent	Total	Small business	Percent
2001	1,514	714	47.2	$405,048,000	$143,432,000	35.4
2002	1,790	937	52.3	$520,676,000	$137,987,000	26.5
2001–02	3,304	1,651	50.0	$925,724,000	$281,419,000	30.4

Source: SBA estimates from the Federal Procurement Data System, U.S. General Services Administration.

These data show small businesses obtaining half of ITVAR contact actions. These small business awards represent about 30% of the total dollar of contract awards. Compared to the share of total industry receipts, small ITVARs obtained 45.5% of total industry sales. This discrepancy between the small business shares suggests that small businesses as a group are less competitive in the Federal ITVAR market than in the private sector. The overall level of small ITVAR participation in Federal contracting does not support the need to lower the current 500 employee size standard.

The comments opposing the proposed 500 employee size standard, however, argued that many small businesses are not competitive against the larger small businesses that are hundreds of employees in size. The SBA examined this point in greater detail. The data show that larger small businesses, those between 200 to 500 employees, accounted for only one-fifth of the ITVAR contracts awarded to small businesses. Furthermore, most contracts identified as ITVAR contracts were full and open contracts. In terms of the dollar value of all Federal ITVAR contracts, the larger small businesses obtain 6.2% of contracts dollars, which is slightly below their estimated 8.7% share of total industry sales. Thus, it does not appear that a compelling argument exists that Federal ITVAR awards to small businesses are dominated by the larger small businesses.

The SBA believes that much of the concern about larger small businesses dominating small business awards are associated with contracts exclusively for IT equipment. The SBA is examining in a similar manner those Federal contracts and will assess the implications of its findings on the nonmanufacturer size standard.

The 7(a) Loan Guaranty Program is SBA's primary business loan program. Table 4 below summarizes the number and amount of 7(a) loans that SBA guaranteed to firms in the two industries comprising ITVARs over the past two fiscal years. The SBA does not identify firms below an industry level to more specifically identify ITVARs.

TABLE 4.—7(A) LOANS IN NAICS 421430 AND NAICS 5415

	FY 2001		FY 2002	
	No.	Amount	No.	Amount
7(a) Loans	227	$41,802,575	921	$139,293,461
Average Loan Size	184,152		151,242	

Source: SBA internal data base.

Small business eligibility for an SBA 7(a) guaranteed loan is based on the size standard of the primary industry of the applicant. For ITVARs that are primarily engaged in the Wholesale Trade Sector, the applicable size standard is 100 employees. For ITVARs primarily engaged in computer services, $21 million in average annual receipts is the applicable size standards. Computer services firms near the $21 million size standard average in size between 125 to 150 employees.

A review of the distribution of 7(a) loans by employment size of the firm shows that only 10 loans, amounting to $6.6 million, were made in fiscal years 2001–02 to firms of 100 or more employees. Moreover, all of these loans were to firms in the computer services industries, with only one loan to a computer wholesale trade firm of more than 50 employees. These loans represent only 1% of the number of loans and less than 4% of the dollar value of loans in the two ITVAR industries. This experience indicates the current size standards are not hindering access to this program for small ITVARs. Thus, no need exists to change the current size standards to broaden access to capital for small ITVARs.

Overview: Based on the above analysis, SBA is adopting a 150 employee size standard. All of the industry factors support a size standard lower than the current 500 employee size standard. The factor of distribution of receipts suggests a size standard in the range of 230 to 400 employees since the industry consists of larger-sized businesses that obtain more than half of industry receipts. The industry factors of average size firm and nonpayroll receipts per establishment support a size standard between 65 to 125 employees. The four-firm concentration ratio is a neutral factor. The assessment of program considerations does not indicate a size standard change from the current 500 employee size standard for Federal contracting or the 100 employee size standard for ITVAR in Wholesale Trade. In light of the comments strongly supporting a 100 employee size standard, the SBA believes the evaluation of the industry characteristics should give greater consideration to the smaller range of size standard levels supported by the data, or between the 65 to 230 employee levels. The SBA believes a 150 employee size standard is an appropriate balance between the available information on the industry and the strong view of the comments for a size standard significantly below 500 employees. In addition, 150 employees would be equivalent to a $21 million employee size standard applicable to Federal computer services contracts. Since many ITVARs provide primarily computer services, having a size standard at a similar level results in these firms being small for both computer service contracts and ITVAR contracts. The SBA believes this administrative consideration is both practical and desirable. It results in a common size standard for closely related activities and avoids complicating the size standards with a significantly different size standard level applicable to small businesses that operate in the two industry activities.

Dominant in Field of Operation: Section 3(a) of the Small Business Act defines a small concern as one that is (1) independently owned and operated, (2) not dominant in its field of operation, and (3) within detailed definitions or size standards established by the SBA Administrator. When the SBA evaluates a size standard, it considers whether a business concern at or below a size standard could be dominant in its field of operation.

For this assessment the SBA generally considers the market share of firms at the contemplated size standard, or other factors that may show whether a firm can exercise a major controlling influence on a national basis in which significant numbers of business concerns are engaged. The SBA has determined that no firm at or below a 150 employee size standard would dominate the ITVAR industry on a national basis. The average size firm meeting the size standard of 150 employees generates approximately 0.1% of total industry receipts. This level of market share effectively precludes any firm at or below the proposed size standard from controlling this industry.

Compliance With Executive Orders 12866, 12988, and 13132, the Paperwork Reduction Act (44 U.S.C. Ch. 35), and the Regulatory Flexibility Act (5 U.S.C. 601–612)

The Office of Management and Budget (OMB) has determined that the final rule is a ''significant'' regulatory action for purposes of Executive Order 12866. Size standards determine which businesses are eligible for Federal small business programs. This is not a major rule under the Congressional Review Act, 5 U.S.C. 800. For purposes of Executive Order 12988, the SBA has determined that this rule is drafted, to the extent practicable, in accordance with the standards set forth in that order. For purposes of Executive Order 13132, the SBA has determined that this rule does not have any federalism implications warranting the preparation of a Federalism Assessment. For the purpose of the Paperwork Reduction Act, 44 U.S.C. Ch. 35, the SBA has determined that this rule would not impose new reporting or record keeping requirements. Below is a regulatory impact a of this size standard change.

Regulatory Impact Analysis

1. Is there a need for the regulatory action?

The SBA is chartered to aid and assist small businesses through a variety of financial, procurement, business development, and advocacy programs. To effectively assist intended beneficiaries of these programs, the SBA must establish distinct definitions of which businesses are deemed small. The Small Business Act (15 U.S.C. 632(a)) delegates to the SBA Administrator the responsibility for establishing small business definitions. It also requires that small business definitions vary to reflect industry differences. Establishing an industry category and size standard for ITVARs more realistically applies small business eligibility requirements under Federal contracts that combine substantial services with the acquisition of computer hardware and software.

2. What are the potential benefits and costs of this regulatory action?

The most significant benefit to businesses obtaining small business status as a result of this rule is eligibility for Federal small business assistance programs. These include SBA's financial assistance programs and Federal procurement preference programs for small businesses, 8(a) firms, small disadvantaged businesses (SDB), and small businesses located in Historically Underutilized Business Zones (HUBZone). Through the assistance of these programs, small businesses may benefit by becoming more knowledgeable, stable, and competitive businesses.

The benefits of a new industry category and size standard would accrue to two groups. First, small businesses competing for ITVAR Federal procurements that contain requirements more similar to industry practices. Second, Federal agencies that will be able to more easily classify IT contracts that combine equipment purchases and services.

Newly defined small businesses would benefit from the SBA's financial programs, in particular its 7(a) Guaranteed Loan Program. Currently, an ITVAR primarily engaged in wholesale trade qualifies for these loans if they

have 100 or fewer employees. This final rule would expand eligibility to about 60 additional firms. Since over the last two years only one loan was guaranteed to a computer wholesaler with more than 50 employees, it is unlikely that this rule would expand the use of the 7(a) Program.

Newly defined small businesses would also benefit from the SBA's economic injury disaster loan program. Since this program is contingent upon the occurrence and severity of a disaster, no meaningful estimate of benefits can be projected.

The SBA estimates that 192 currently defined small businesses (those firms that qualify as a nonmanufacturer under a 500 employee size standard) would lose small business status and not be eligible businesses for Federal small business procurement preference programs. The benefits of the rule in Federal contracting will be in terms of clarifying requirements on Federal contracts combining IT supplies and services and increasing Federal procurement opportunities for small businesses that are much smaller than 500 employees. It is uncertain how much additional contracting may go to the small businesses with 150 or fewer employees. The SBA expects many of the Federal contracts obtained by ITVARs between 151 to 500 employees would be awarded to the smaller small businesses. This is estimated to be between $10 million to $25 million annually.

This rule is not expected to increase administrative costs to the Federal Government associated with bidders for Federal small business procurement programs, additional firms seeking SBA guaranteed lending programs, and firms eligible for enrollment in SBA's PRO-Net data base program. For the limited number of businesses affected by this rule, it is unlikely to materially change the costs associated with compliance and verification of small business status and protests of small business status, since mechanisms are currently in place to handle these administrative requirements.

The costs to the Federal Government may be higher on some Federal contracts as a result of this rule. With a more appropriate contract requirement for IT value added service, Federal agencies may choose to set aside more contracts for competition among small businesses rather than using full and open competition. The movement from unrestricted to set aside is likely to result in competition among fewer bidders for a contract. The additional costs associated with fewer bidders, however, are likely to be minor since, as a matter of policy, procurements may be set aside for small businesses or under the 8(a) and HUBZone Programs only if awards are expected to be made at fair and reasonable prices.

The final size standard may have distributional effects among currently defined small businesses and the newly defined small businesses. Although the actual outcome of the gains and losses among these small businesses cannot be estimated with certainty, it is likely that a transfer of some Federal contracts from small businesses above 150 employees to those under 150 employees. An analysis of Federal ITVAR contracts for fiscal years 2001–02 showed about $57 million was awarded to small ITVARs of about 200 employees to 500 employees. Of these contracts, $23 million was awarded under the 8(a) Program to firms within that size range. If contracting officers continued with about the same level of 8(a) contracting and decided to set-aside additional ITVAR contracts, $10 million to $25 million annually could be shifted from small ITVARs above 150 employees to those with less than 150 employees.

The creation of an ITVAR industry category and size standard is consistent with SBA's statutory mandate to assist small businesses. This regulatory action promotes the Administration's objectives. One of the SBA's goals in support of the Administrator's objectives is to help individual small businesses succeed through fair and equitable access to capital and credit, government contracts, and management and technical assistance. Reviewing and modifying size standards when appropriate ensures that intended beneficiaries have access to small business programs designed to assist them. Size standards do not interfere with State, local, and tribal governments in the exercise of their government functions. In a few cases, State and local governments have voluntarily adopted the SBA's size standards for their programs to eliminate the need to establish an administrative mechanism for developing their own size standards.

Final Regulatory Flexibility Analysis

Under the Regulatory Flexibility Act (RFA), this rule may have a significant impact on a substantial number of small entities. Immediately below, the SBA sets forth a final regulatory flexibility analysis (FRFA) of this proposed rule addressing the reasons and objectives of the rule; the SBA's description and estimate of the number of small entities to which the rule will apply; the projected reporting, record keeping, and other compliance requirements of the rule; the relevant Federal rules which may duplicate overlap or conflict with the final rule; and alternatives considered by the SBA.

(1) What is reason for this action?

As discussed in the supplemental information, the purpose of this final rule is to establish more reasonable and eligibility requirements and size standard for Federal IT contracts that combine the acquisition of computer equipment and services. The adopted changes will better assist small ITVARs in obtaining Federal contracts.

(2) What is the objective and legal basis for the rule?

Section 3(a) of the Small Business Act (15 U.S.C. 632(a)) gives SBA the authority to establish and change size standards. Size standards are developed on an industry basis and vary by industry to reflect differing characteristics of firms in an industry or other appropriate factors regarding an industry. This rule establishes an industry category of ITVAR that SBA believes is necessary to appropriately apply its small business assistance program to small businesses in this category.

(3) What is SBA's description and estimate of the number of small entities to which the rule will apply?

SBA estimates that approximately 1,737 small businesses could receive assistance as a result of this proposed rule. In SBA's PRO-Net data base, 1,760 businesses indicated that they are wholesalers of IT equipment and are capable of providing some other services. All but 23 of these firms have 150 or fewer employees. It cannot be determined how many could actually meet the requirements of the ITVAR definition. Thus, the actual number of affected businesses is likely to be smaller. A few small computer manufacturers could be adversely affected by this rule since small business set-aside, 8(a), or HUBZone contracts classified under the ITVAR industry would not apply the nonmanufacturer rule. However, the SBA believes the impact would be minimal since the ITVAR contracts are most likely not currently being awarded to small manufacturers under these programs.

Description of Potential Benefits of the Rule: The most significant benefit to businesses obtaining small business status as a result of this rule is their eligibility for Federal small business assistance programs. These include SBA's financial assistance programs and Federal procurement preference

programs for small businesses, 8(a) firms, SDBs, and small businesses located in HUBZones.

In fiscal years 2001–02, $925.7 million were awarded in contracts that were primarily for IT equipment but also included services. Small businesses received $281.4 million. The SBA estimates that approximately $10 million to $25 million in additional Federal contracts could be awarded annually to smaller small businesses under the ITVAR 150 employee size standard. Most of these contracts would consist of a potential transfer from ITVARs with between 150 and 500 employees to small ITVARs with fewer than 150 employees. This does not represent the creation of new contracting activity by the Federal government, merely a possible reallocation or transfer to different sized firms.

The SBA does not believe any additional loans would be made under its 7(a) Guaranteed Loan Program as a result of changes the SBA is proposing in this rulemaking. ITVARs primarily engaged in wholesale trade are currently eligible for this program if they have 100 or fewer employees. In the last two years, only one 7(a) loan was made to wholesale trade firm with more than 50 employees.

Description of Potential Costs of the Rule: The changes in size standards as they affect Federal contracting are not expected to add any significant costs to the Federal Government. As a matter of policy, procurements may be set aside for small businesses or under the 8(a) and HUBZone Programs only if awards are expected to be made at reasonable prices. Although fewer small businesses will be competing for ITVAR contracts, the large number of small businesses should have little discernable impact on competition. Similarly, this rule should not result in any added costs associated with the 7(a) Program. The amount of lending authority SBA can make or guarantee is established by appropriation.

The competitive effects of size standard revisions differ from those normally associated with other regulations which typically burden smaller firms to a greater degree than larger firms in areas such as prices, costs, profits, growth, innovation and mergers. A change to a size standard is not anticipated to have any appreciable effect on any of these factors, although small businesses, 8(a) firms, or SDBs between 150 to 500 employees may be less successful in competing for some Federal procurement opportunities. On the other hand, with more realistic eligibility requirements, Federal agencies may increase the overall number of contracting opportunities available under these programs, and this could result in greater opportunities for businesses much smaller than the current size standard.

(4) Will this rule impose any additional reporting or record keeping requirements on small businesses?

This final rule does not impose any new information collection requirements which require OMB approval under the Paperwork Reduction Act of 1980, 44 U.S.C. 3501–3520. A new size standard does not impose any additional reporting, record keeping or compliance requirements on small entities. Changing size standards alters the access to SBA programs that assist small businesses, but does not impose a regulatory burden as they neither regulate nor control business behavior.

(5) What are the relevant Federal rules which may duplicate, overlap or conflict with the final rule?

This final rule overlaps rules of other Federal agencies that use the SBA's size standards to define a small business. Under section 3(a)(2)(c) of the Small Business Act, unless specifically authorized by statute, Federal agencies must use SBA's size standards to define a small business. In 1995, the SBA published in the **Federal Register** a list of statutory and regulatory size standards that identified the application of the SBA's size standards as well as other size standards used by Federal agencies (60 FR 57988–57991, dated November 24, 1995). The SBA is not aware of any Federal rule that would duplicate or conflict with establishing size standards.

(6) What alternatives did the SBA consider?

The SBA cannot estimate the impact of a size standard change on each and every Federal program that uses its size standards. In cases where an SBA size standard is not appropriate, the Small Business Act and the SBA's regulations allow Federal agencies to develop different size standards with the approval of the SBA Administrator (§ 121.902). For purposes of a regulatory flexibility analysis, agencies must consult with the SBA's Office of Advocacy when developing different size standards for their programs.

SBA considered revising its definition of a manufacturer. On April 1, 1999, the SBA published in the **Federal Register** a ''Request for Comments'' asking for comments on a modern definition of the term manufacturer and a new definition for ''Remanufacturer'' (64 FR 15708, dated April 1, 1999). The SBA received only six comments on this issue, none of which provided sufficient information to support a revision to the SBA's current manufacturer definition. After further review, the SBA now believes that establishing an ITVAR industry category is a more effective approach to addressing the size eligibility requirements of nonmanufacturers providing substantial services along with IT products on Federal contracts.

As discussed in the proposed rule, the SBA considered three other size standards along with its proposed 500 employee size standard. One of those alternatives was the 100 employee size standard advocated by many of the comments. As explained in this final rule, the SBA believes that available industry data and Federal contracting trends support a size standard much lower than the proposed 500 employee size standard but higher than 100 employees.

List of Subjects in 13 CFR Part 121

Administrative practice and procedure, Government procurement, Government property, Grant programs—business. Loan programs—business, Small businesses.

■ For the reasons set forth in the preamble, the SBA amends part 121 of title 13 of the Code of Federal Regulations as follows:

PART 121—SMALL BUSINESS SIZE REGULATIONS

Subpart A—Size Eligibility Provisions and Standards

■ 1. The authority citation of part 121 continues to read as follows:

Authority: 15 U.S.C. 632(a), 634(b)(6), 636(b), 637(a), 644(c) and 662(5) and sec. 304, Pub. L. 103–403, 108 Stat. 4175, 4188, Pub. L. 106–24, 113 Stat. 39.

■ 2. In § 121.201, in the table ''Small Business Size Standards by NAICS Industry,'' under the heading Subsector 541—Professional, Scientific, and Technical Services, revise the entry for 541519 to read as follows:

SMALL BUSINESS SIZE STANDARDS BY NAICS INDUSTRY

NAICS codes	NAICS U.S. industry title	Size standards in millions of dollars	Size standards in number of employees
*	* * * * *	*	*
	Subsector 541—Professional, Scientific and Technical Services		
*	* * * * *	*	*
541519	Other Computer Related Services	$21.0	.....
EXCEPT ...	Information Technology Value Added Resellers [18]	.....	[18]150

* * * * *

■ 3. In § 121.201, add footnote 18 at the end of the footnote section, under the table to read as follows:

Footnotes

* * * * *

18. NAICS code 541519—An Information Technology Value Added Reseller provides a total solution to information technology acquisitions by providing multi-vendor hardware and software along with significant services. Significant value added services consist of, but are not limited to, configuration consulting and design, systems integration, installation of multi-vendor computer equipment, customization of hardware or software, training, product technical support, maintenance, and end user support. For purposes of Government procurement, an information technology procurement classified under this industry category must consist of at least 15% and not more than 50% of value added services as measured by the total price less the cost of information technology hardware, computer software, and profit. If the contract consists of less than 15% of value added services, then it must be classified under a NAICS manufacturing industry. If the contract consists of more than 50% of value added services, then it must be classified under the NAICS industry that best describes the predominate service of the procurement. To qualify as an Information Technology Value Added Reseller for purposes of SBA assistance, other than for Government procurement, a concern must be primarily engaged in providing information technology equipment and computer software and provide value added services which account for at least 15% of its receipts but not more than 50% of its receipts.

Dated: September 24, 2003.

Hector V. Barreto,

Administrator

[FR Doc. 03–31795 Filed 12–24–03; 8:45 am]

BILLING CODE 8025–01–P

SMALL BUSINESS ADMINISTRATION

13 CFR Part 121

RIN 3245–AE78

Small Business Size Standards; Testing Laboratories

AGENCY: U.S. Small Business Administration (SBA).

ACTION: Final rule.

SUMMARY: The U.S. Small Business Administration (SBA) is adopting the proposed increase to the size standard for the Testing Laboratories industry (North American Industry Classification System (NAICS) code 541380) from $6 million to $10 million in average annual receipts. This action will better define the size of businesses in this industry that the SBA believes should be eligible for Federal small business assistance programs.

DATES: This rule is effective January 28, 2004.

FOR FURTHER INFORMATION CONTACT: Robert N. Ray, Office of Size Standards, at (202) 205–6618 or *sizestandards@sba.gov.*

SUPPLEMENTARY INFORMATION: On April 9, 2002, the SBA issued a proposed rule in the **Federal Register** (67 FR 17020) to increase the size standard for the Testing Laboratories industry (NAICS 541380) from $6 million to $10 million in average annual receipts (available at *http://www.sba.gov/size/indexwhatsnew.html*). The SBA proposed this size standard after receiving requests from testing laboratories to review the $6 million size standard for that industry in light of upgraded capacities and skills that Federal agencies have recently required among contractors that specialize in environmental and radiochemical testing. The requesting testing laboratories claimed that these minimum requirements have raised the costs of doing business in this industry, and reduced the pool of eligible small testing laboratories capable of satisfying these requirements. If this trend persists, they maintain, Federal agencies could be hampered in using Government preference programs designed to assist small testing laboratories.

Based on these concerns, the SBA conducted a review of this industry's size standard. In addition to reviewing patterns of Federal procurement in this industry, the SBA evaluated data on the industry structure. This review involved comparisons of average firm size, the size distribution of firms, measures of start-up costs and the degree of concentration of activity among very large firms in the industry. Based on its review of each evaluation factor, and the amount of participation of small testing laboratories in Federal Government procurement, the SBA concluded that the data supported a size standard in this industry of $10 million in average annual receipts. (For more detailed information on the reasons for proposing a $10 million size standard see the April 9, 2002, (67 FR 17020) proposed rule.) After careful consideration of the comments received on the proposed rule, the SBA has decided to adopt the proposed size standard of $10 million.

Discussion of Comments on the Proposed Rule

The SBA received 35 comments on the proposed rule after extending the comment period through September 30, 2002 (67 FR 56966, September 6, 2002). Of the 35 commentators, 21 supported the proposed increase, while 14 opposed it. Below is a summary of the major issues raised by the comments and the SBA's response.

Comments Supporting the Proposed Increase to $10 Million

The 21 comments in favor of the proposed rule raised a number of issues in support of a higher size standard. The most important issue discussed was the requirements contained in Federal contracts. Six commentators cited a pattern of increased Government requirements in recent years as leading to the result in which testing laboratories under the present size standard of $6 million often cannot adequately perform on a Federal contract. These Federal Government requirements for laboratory operations include: reporting requirements, quality assurance plans, emergency contingency plans, analytical requirements, electronic data deliverable requirements, audit requirements, management costs, health and safety requirements, regulatory requirements and insurance and liability requirements. In addition, radioactive and non-radioactive hazards often required testing by environmental radiochemistry laboratories that have the licenses, procedures, insurance protection, and approvals for both types of hazardous samples. Therefore, the general belief among these commentators is that large capital and labor expenses are required for a testing laboratory to be active as a successful Federal contractor. These commentators believed that the size standard should be raised so that more Federal contracts will be set aside for small businesses, and there will be a larger pool of small testing laboratories to compete for those contracts.

Three commentators cited a recent pattern of increasing consolidation in the industry as one or more very large testing laboratories have acquired a number of smaller testing laboratories, while competing testing laboratories have gone out of business. They claimed that this trend has resulted in greater concentration in the industry, and less ability for small testing laboratories to compete for Federal contracts.

Two commentators, both large firms, supported the higher size standard because they have found it difficult to find competent small testing laboratories to meet their Federal subcontracting goals under the present size standard. A higher size standard would immediately qualify more testing laboratories as small, while permitting additional small testing laboratories to expand in size and still be qualified as small.

Finally, two commentators believed that a higher size standard would allow them to expand. These commentators contended that the present size standard tends to frustrate growth and reduce competition.

Comments Opposing the Proposed Increase

The strongest criticism of the proposed increase focused on the claim that testing laboratories in the $6 million to $10 million size range are relatively successful and well capitalized compared to testing laboratories with less than $6 million in sales. Eight of the 14 commentators opposing the proposed change asserted that testing laboratories in this size range are too successful to be considered small. They indicated that these larger testing laboratories have lower costs than smaller testing laboratories due to higher volume. They also view larger laboratories as better able to target Federal contracts. A common observation is that testing laboratories in the $6 million to $10 million size range have larger facilities than smaller testing laboratories, and that Federal contracts are often awarded on the basis of individual facility qualifications. Four commentators believed that a higher size standard would give significant advantages to the large, single-site testing laboratories when competing for Federal contracts.

Commentators opposing the proposed change also generally believed that there is a stagnant market for Federal contracts and that increasing the size standard in such an environment would increase competition for Federal contracts. This additional competition would have a negative impact on testing laboratories that are presently under the $6 million size standard.

The comments opposing the proposed size standard also raised an issue regarding the performance of small testing laboratories on subcontracts awarded by large businesses in fulfillment of subcontracting goals on Federal contracts. They contended that small testing laboratories are very successful and competitive in obtaining subcontracts, and thus, a higher size standard was not needed. One comment provided data on such subcontracts awarded by several large businesses. These data indicated that small testing laboratories were able to achieve a higher proportion of subcontracts than Federal contracts.

Other commentators opposing the proposed change cited information in two key areas identified in the proposed rule as reasons supporting an increase in the size standard. First, three commentators noted that the trend toward consolidation in the industry was associated with one or more very large companies buying out smaller, less successful, testing laboratories. These commentators recognized that there has been a shakeup in the industry, with smaller testing laboratories often unsuccessfully competing with very large testing laboratories for Federal Government contracts. Second, three commentators also contended that recent Federal Government requirements have tended to reduce the pool of small testing laboratories that can effectively bid on Federal contracts. They viewed these developments as reasons for retaining the current size standard rather than supporting an increase.

Response to Significant Issues Raised by Comments

The SBA believes that the trends in the Testing Laboratories industry and the level of small business participation in Federal contracting support a size standard higher than $6 million and the adoption of the proposed $10 million size standard. Since the time of the proposed rule, Federal contracting data have become available for fiscal years (FY) 2001–02. These data show small testing laboratories have increased their level of participation in Federal contracting over previous years. Small testing laboratories obtained 23.1% of testing contract dollars in FY 2002, and 29.7% in FY 2001. However, these levels remain significantly below the small business share of 44% of total industry revenues. The SBA found in a detailed review of fiscal years 2001–02 Federal testing contracts that small testing laboratories are successful in obtaining contracts of varying sizes. However, the consistent discrepancy between the Federal and industry share does lend credence to the arguments advanced by the comments supporting the proposed size standard that Federal contract requirements have become more restrictive in recent years, and that this pattern favors larger, more heavily capitalized firms. The SBA also agrees with the view that the industry has become more concentrated over time with a much greater presence of very large testing laboratories. In 1997, $3.1 billion out of $6.4 billion in sales were generated by testing laboratories with more than $10 million in sales. This share, almost 50%, has probably increased significantly with the recent consolidation in the industry and the departure of small testing laboratories. The SBA believes that these patterns of more stringent contracting requirements and greater industry concentration support a higher size standard.

The SBA is aware that firms that are larger in size will often possess greater

capabilities than smaller firms. This pattern occurs in most industries. Regardless of where a size standard is established, there will be a variation in firm size and capabilities within the pool of eligible small businesses and this variation will generally favor larger firms in the distribution. However, Federal contract requirements vary from procurement to procurement, and there is no certainty that firms with less than $6 million in sales will be unable to compete with firms in the $6 million to $10 million range for most contracts. The SBA is concerned that small testing laboratories under the current $6 million size standard need to be able to grow to a larger size to capably handle Federal testing requirements and to develop a stronger competitive base before they grow beyond the size standard.

The SBA does not agree that subcontract awards to small testing laboratories should be used as a basis to retain the current size standard. Subcontract awards by industry activity on Federal contracts are not reported by large businesses. Without a systematic collection of testing subcontract data, the SBA is unable to adequately assess the implications of Federal subcontracting on the size standard. In addition, the SBA received comments from two large businesses supporting the proposed size standard because they were experiencing difficulty in finding capable small testing laboratories to satisfy their testing requirements. The SBA believes that the industry data offer an alternative to considering Federal subcontracting trends. These data reflect the amount of revenues obtained by testing laboratories from all sources. As discussed in this rule and the proposed rule, the SBA has concluded that data on the characteristics of testing laboratories support the proposed size standard.

Explanation of Revised and Updated Federal Contracting Data

Comments expressed a concern about the accuracy of the Federal procurement data discussed in the proposed rule. In table 3 of the proposed rule, a formatting error occurred that showed the Federal testing contract data in thousands of dollars instead of millions of dollars. The table below shows the correct data as well as the recently available contract data for fiscal years 2001–02.

SMALL BUSINESS PRIME CONTRACT AWARDS, FISCAL YEARS 1998–2002

[Data in millions of dollars]

Category	FY 1998	FY 1999	FY 2000	FY 2001	FY 2002
Testing laboratories awards	$861.6	$628.0	$84.7	$176.7	$233.7
Small testing laboratories awards	$44.1	$45.3	$42.1	$52.5	$54.0
Percent to small testing laboratories	5.1%	7.2%	49.7%	29.7%	23.1%

Source: Federal Procurement Data Center, U.S. General Services Administration.

Note: Data for FY 2000 for Testing Laboratories are not representative of most years due to deobligations of $135 million from procurements initiated in previous years.

The concerns regarding the Federal contracting data also questioned the overall quality of the testing contracts reported. While a certain degree of error exists with all large databases, the SBA believes the data collected by the Federal Procurement Data System (FPDS), the official database on Federal contract award information, satisfactorily reports the overall level of Federal testing contracts and the amount of contracting to various organizational categories. FPDS collects detailed information on all Federal contracts with a value of $25,000 or more. The table above shows data on Federal contracts for testing services as evidenced by the assignment of an industry code for the testing laboratories industry (NAICS 541380 and SIC 8734). For these contracts, testing comprises the predominate activity of the contract. The dollar amounts reported show that amount of funds obligated to a contract within a fiscal year. That is, for a contract that is more than 1 year in duration, the amount of funds spent in a fiscal year are reported rather than the entire anticipated dollar value of the contract in the year awarded. For indefinite delivery/indefinite quantity contracts, only amounts actually awarded through a task order are reported, not potential amounts. The SBA recognizes that testing may be included within other Federal contracts; however, no method exists to accurately identify those contracts. Further, testing would tend to comprise only a minor part of those contracts. The SBA does not believe that those contracts have a bearing on the size standard for testing laboratories.

Compliance With Executive Orders 12866, 12988, and 13132, the Paperwork Reduction Act (44 U.S.C. Ch. 35) and the Regulatory Flexibility Act (5 U.S.C. 601–612)

The Office of Management and Budget (OMB) has determined that this final rule is a significant regulatory action for purposes of Executive Order 12866. Size standards determine which businesses are eligible for Federal small business programs. This is not a major rule, however, under the Congressional Review Act, 5 U.S.C. 800. For the purpose of the Paperwork Reduction Act, 44 U.S.C. Ch. 35, the SBA has determined that this rule would not impose new reporting or record keeping requirements. For purposes of Executive Order 13132, the SBA has determined that this rule does not have any federalism implications warranting the preparation of a Federalism Assessment. For purposes of Executive Order 12988, the SBA has determined that this rule is drafted, to the extent practicable, in accordance with the standards set forth in that order. Our Regulatory Impact Analysis follows.

Regulatory Impact Analysis

1. Is there a need for the regulatory action?

The SBA is chartered to aid and assist small businesses through a variety of financial, procurement, business development, and advocacy programs. To effectively assist intended beneficiaries of these programs, the SBA must establish distinct definitions of which businesses are deemed small businesses. The Small Business Act (15 U.S.C. 632(a)) delegates to the SBA Administrator the responsibility for establishing small business definitions. It also requires that small business definitions vary to reflect industry differences (the Small Business Act is available at *http://www.sba.gov/library/lawroon.html*). The preamble of the proposed rule explained the approach the SBA follows when analyzing a size standard for a particular industry. Based on that analysis, and comments received on the proposed rule, the SBA believes

that a revision to the current size standard for testing laboratories is needed to better define small businesses in this industry.

2. What are the potential benefits and costs of this regulatory action?

The most significant benefit to businesses obtaining small business status as a result of this rule is eligibility for Federal small business assistance programs. Under this rule, 120 additional firms generating 9.9% of sales in this industry would obtain small business status and could be eligible for these programs. These programs include the SBA's financial assistance programs, economic injury disaster loans and Federal procurement preference programs for small businesses, 8(a) firms, small disadvantaged businesses (SDB), and small businesses located in Historically Underutilized Business Zones (HUBZones). Through the assistance of these programs, small businesses may benefit by becoming more knowledgeable, stable, and competitive businesses.

Other Federal agencies also use the SBA's size standards for their programs for a variety of regulatory and program purposes. The SBA does not have information on each of these uses sufficient to evaluate the impact of the size standard change. If an agency believes that a different size standard is appropriate for its programs, it must contact the SBA. If an agency is seeking to change size standards in a general rulemaking context, then the agency should contact the SBA's Office of Size Standards. (*See* 13 CFR 121.901–904. The SBA's regulations are available at *http://www.sba.gov/library/lawroon.html*.) If the agency is seeking to change size standards for the purposes of a Regulatory Flexibility Act (RFA) analysis then the SBA's Office of Advocacy should be contacted pursuant to the RFA (5 U.S.C. 603(a)), available at *http://www.sba.gov/advo/laws/regflex.html*). Section 601(3) of the RFA requires the agency to consult with the Office of Advocacy and provide an opportunity for public comment when using a different size standard for the RFA analysis.

The benefits of a size standard increase to a more appropriate level would affect three groups: (1) Businesses that benefit by gaining small business status from the proposed size standard and use small business assistance programs; (2) growing small businesses that may exceed the current size standard in the near future and who will retain small business status from the higher size standard; and (3) Federal agencies that award contracts under procurement programs that require small business status.

Newly defined small businesses could benefit from the SBA's 7(a) Guaranteed Loan Program. The SBA estimates that approximately $2 million in new Federal loan guarantees would be made to these newly defined small businesses. This represents approximately 9.9% of the annual average of $19 million in loans that were guaranteed by the SBA under this financial program to testing laboratories firms during fiscal years 1998–2002. Because of the size of the loan guarantees, most loans are made to small businesses well below the size standard. Thus, increasing the size standard will likely result in only a small increase in small business guaranteed loans to testing laboratories, and the $2 million estimated figure may overstate the actual impact.

The newly defined small businesses would also benefit from the SBA's Economic Injury Disaster Loan (EIDL) program. Since this program is contingent upon the occurrence and severity of a disaster, however, no meaningful estimate of benefits can be projected.

The SBA estimates that firms gaining small business status could potentially obtain Federal contracts worth an additional $42 million in sales. This represents 9.9% of approximately $424 million that the Federal Government awarded per year in this industry during fiscal years 1998–2002.

Federal agencies may benefit from the higher size standards if the newly defined and expanding small businesses compete for more set-aside procurements. The larger base of small businesses would likely increase competition and would lower the prices on set-aside procurements. A larger base of small businesses may create an incentive for Federal agencies to set aside more contracts, resulting in greater opportunities for all small businesses. Small business opportunities will be enhanced in full and open procurements as newly eligible firms gain experience in Federal contracting through set aside and other small business procurement preference programs. Large businesses with small business subcontracting goals may also benefit from a larger pool of small businesses by enabling them to better achieve their subcontracting goals at lower prices. No estimate of cost savings from these contracting decisions can be made, since data are not available to directly measure price or competitive trends on Federal contracts.

To the extent that up to 120 additional firms could become active in Federal Government small business programs, this may entail some additional administrative costs to the Federal Government associated with additional bidders for Federal procurements, additional firms seeking assistance from the SBA's guaranteed lending programs, and additional firms eligible for enrollment in the SBA's PRO-Net database program. Among businesses in this group seeking the SBA's assistance, there will be some additional costs associated with compliance, protests, and verification of small business status. These costs are likely to generate minimal incremental costs since mechanisms are currently in place to handle these administrative requirements.

The costs to the Federal Government may be higher on some Federal contracts. With a greater number of businesses defined as small, Federal agencies may choose to set aside more contracts for competition among small businesses rather than using full and open competition. The movement from full and open to set-aside contracting is likely to result in competition among fewer bidders for a contract. Also, higher costs may result if additional full and open contracts are awarded to HUBZone and SDB businesses as a result of a price evaluation preference. The additional costs associated with fewer bidders and price evaluation preferences, however, are likely to be minor since, as a matter of policy, procurements may be set aside for small businesses or reserved for the 8(a) and HUBZone programs, only if awards are expected to be made at fair and reasonable prices.

The new final size standard may have distributional effects among large and small businesses. Although the actual outcome of the gains and losses among small and large businesses cannot be estimated with certainty, several trends are likely to emerge. First, a transfer of some Federal contracts from large businesses to small businesses will probably occur. Large businesses may have fewer Federal contract opportunities if Federal agencies decide to set aside more Federal procurements for small businesses. Also, some Federal contracts may be awarded to HUBZone and SDB businesses instead of large businesses, since those two categories of small business are eligible for price evaluation adjustment for contracts competed on a full and open basis. Similarly, currently defined small businesses may obtain fewer Federal contacts due to the increased competition from more businesses defined as small. This transfer, however, may be offset by a greater number of

Federal procurements set-aside for all small businesses. The number of newly defined and expanding small businesses that are willing and able to sell to the Federal Government, however, would limit the potential transfer of contracts away from large and currently defined small businesses. The potential distributional impacts of these transfers may not be estimated with any degree of precision since the data on the size of business receiving a Federal contract are limited to identifying whether a business is small or other-than-small, without regard to the exact size of business.

The revision to current size standards for testing laboratories is consistent with the SBA's statutory mandate to assist small businesses. This regulatory action promotes the Administrator's objectives. One of the SBA's goals in support of the Administrator's objectives is to help individual small businesses succeed through fair and equitable access to capital and credit, Government contracts, and management and technical assistance. Reviewing, and modifying size standards when appropriate, ensures that intended beneficiaries have access to small business programs designed to assist them. Size standards do not interfere with State, local, and tribal governments in the exercise of their government functions. In a few cases, State and local governments have voluntarily adopted the SBA's size standards for their programs to eliminate the need to establish an administrative mechanism for developing their own size standards.

Final Regulatory Flexibility Analysis

Under the RFA, this rule may have a significant impact on a substantial number of small entities. As described in the regulatory impact analysis, this rule may impact small entities seeking SBA 7(a) Guaranteed Loans or Economic Injury Disaster Loans as well as the Federal Government's procurement preference programs.

The size standard may also affect small businesses participating in the programs of other agencies that use the SBA size standards. As a practical matter, however, the SBA cannot estimate the impact of a size standard change on each and every Federal program that uses its size standards. No comments were received that identified a program or regulation that would be adversely affected by the proposed size standard. In cases where an SBA size standard is not appropriate, the Small Business Act and the SBA's regulations allow Federal agencies to develop different size standards with the approval of the SBA Administrator (15 U.S.C. 632(a)(2)(c) and 13 CFR 121.902). If the agency is seeking to change size standards for the purposes of an RFA analysis, then the SBA's Office of Advocacy should be contacted pursuant to the RFA).

Immediately below, the SBA sets forth a final regulatory flexibility analysis (FRFA) of this rule addressing the reasons and objective of the rule; a description and estimate of small entities to which the rule will apply; the projected reporting, record keeping, and other compliance requirements of the rule; the relevant Federal rules which may duplicate, overlap or conflict with the rule; and alternatives to the final rule considered by the SBA that minimize the impact on small businesses.

(1) What is the need for and objective of this rule?

The objective of this rule is to establish an appropriate size standard for the Testing Laboratories industry. The revision to the size standard for the Testing Laboratories industry more accurately defines the size of businesses in this industry that the SBA believes should be eligible for Federal small business assistance programs. Significant changes in the industry and in the requirements of Government clients support the need for a different size standard.

(2) What significant issues were raised by the public comments in response to the Initial Regulatory Flexibility Act (IRFA)?

About a third of commentators believe that the SBA is permitting testing laboratories to be eligible that are already very successful and that do not need the additional advantage of being considered small. The SBA, however, believes that a higher size standard is necessary due to Federal contract requirements that require a high degree of competence and physical investment, a tendency for very large firms to acquire smaller testing laboratories, and the fact that small testing laboratories have been awarded Federal procurements significantly less than their overall share in the industry.

(3) What is the SBA's description and estimate of the number of small entities to which the rule will apply?

Within the Testing Laboratories industry, 3,762 out of 4,126 businesses are small under the $6 million size standard that is presently in place. The number of small businesses will increase by 120 testing laboratories to 3,882 under a $10 million size standard. Testing laboratories becoming newly eligible for the SBA's assistance as a result of this rule cumulatively generate $635 million in receipts. The amount of receipts by small testing laboratories would increase from $2.7 billion to $3.3 billion out of a total of $6.4 billion in receipts. The small business coverage in this industry would increase by 9.9% of total receipts. This is based on the U.S. Census Bureau's special tabulation of the 1997 Economic Census for the SBA's Office of Size Standards, which shows industry characteristics by firm size.

(4) Will this rule impose any additional reporting or recordkeeping requirements or other compliance requirements on small businesses?

A new size standard does not impose any additional reporting, recordkeeping or other compliance requirements on small entities for the SBA's programs. A change in a size standard would not create additional costs on a business to determine whether or not it qualifies as a small business. A business needs to only examine existing information to determine its size, such as Federal tax returns, payroll records, and accounting records. Size standards determine ''voluntary access'' to the SBA's and other Federal programs that assist small businesses, but do not impose a regulatory burden as they neither regulate nor control business behavior. In addition, this rule does not impose any new information collection requirements from the SBA which require approval by the OMB under the Paperwork Reduction Act of 1980, U.S.C. 3501–3520.

(5) What are the steps the SBA has taken to minimize the significant economic impact on small business?

Most of the economic impact on small businesses will be positive. The most significant benefits to businesses that will obtain small business status as a result of this rule are eligibility for the SBA's financial assistance programs such as 7(a) business loans, 504 business loans, and EIDL assistance and eligibility for the Federal Government's procurement preference programs for small business, 8(a) firms, SDBs, and HUBZone small businesses The SBA estimates that approximately $42 million per year of additional Federal prime contracts may be awarded to businesses becoming newly designated small businesses in the Testing Laboratories industry and that approximately $2 million in new Federal loan guarantees could be made annually to these newly defined small businesses. The projected increase of three additional loans totaling approximately $2 million in new

Federal loan guarantees will have virtually no impact on the overall availability of loans for the SBA's loan programs, which have averaged about 50,000 loans totaling more than $12 billion per year in recent years.

(6) What alternatives were considered by the SBA to accomplish its regulatory objectives while minimizing the impact on small entities?

In the proposed rule of April 9, 2002, the SBA considered alternative size standards which included a more limited increase to $7.5 million, and a larger increase to $12.5 million. The SBA decided not to propose the more moderate increase to $7.5 million because it believed that the very low share of Federal procurements to small testing laboratories indicated the need for a higher size standard to include those testing laboratories that can meet and perform on the majority of Federal analytical testing contracts. The SBA also considered, but rejected, the larger increase to $12.5 million based on the fact that two of the five factors considered in determining the appropriate size standard pointed to a size standard at, or only slightly above, the $6 million nonmanufacturing anchor size standard. The SBA believes that the evaluation factors should be virtually unanimous for an increase of this magnitude.

List of Subjects in 13 CFR Part 121

Administrative practice and procedures, Government procurement, Government property, Grant programs—business, Loan programs—business, Small businesses.

For reasons set forth in the preamble, the SBA amends part 121 of title 13 of the Code of Federal Regulations as follows:

PART 121—SMALL BUSINESS SIZE REGULATIONS

■ 1. The authority citation of part 121 continues to read as follows:

Authority: 15 U.S.C. 632(a), 634(b)(6), 636(b), 637(a), 644(c) and 662(5) and Sec. 304, Pub. L. 103–403, 108 Stat. 4175, 4188, Pub. L. 106–24, 113 Stat. 39.

■ 2. In § 121.201, in the table ''Small Business Size Standards by NAICS Industry'', under the heading NAICS ''Subsector 541—Professional, Scientific and Technical Services,'' revise entry 541380 to read as follows:

§ 121.201 What size standards has SBA identified by North American Industry Classification System codes?

* * * * *

SMALL BUSINESS SIZE STANDARDS BY NAICS INDUSTRY

NAICS codes	NAICS U.S. industry title	Size standards in millions of dollars	Size standards in number of employees
*	* * * * *	*	*
	Subsector 541—Professional, Scientific and Technical Services		
*	* * * * *	*	*
541380	Testing Laboratories	$10.0	
*	* * * * *	*	*

Dated: September 27, 2003.

Hector V. Barreto,

Administrator.

Editorial Note: This document was received in the Office of the Federal Register on December 19, 2003.

[FR Doc. 03–31794 Filed 12–24–03; 8:45 am]

BILLING CODE 8025–01–P

DEPARTMENT OF THE TREASURY

Internal Revenue Service

26 CFR Part 1

[TD 9103]

RIN 1545–BC97

Information Statements for Certain Substitute Payments

AGENCY: Internal Revenue Service (IRS) Treasury.

ACTION: Final regulations.

SUMMARY: This document contains final regulations under section 6045(d) that reflect the changes to information reporting for payments in lieu of dividends effected by the Jobs and Growth Tax Relief Reconciliation Act of 2003 (JGTRRA). These regulations provide that brokers must file information returns and furnish information statements reporting substitute payments in lieu of dividends to individuals who receive substitute payments in lieu of dividends on or after January 1, 2003.

DATES: *Effective Date:* These final regulations are effective December 29, 2003.

Applicability Date: These regulations apply to information returns required to be filed, and information statements required to be furnished, after December 31, 2003.

FOR FURTHER INFORMATION CONTACT: Michael Hara of the Office of Associate Chief Counsel (Procedure and Administration), (202) 622–4910 (not a toll-free number).

SUPPLEMENTARY INFORMATION:

Background

Section 302 of the Jobs and Growth Tax Relief Reconciliation Act of 2003 (the JGTRRA), Public Law No. 108–27 (117 Stat. 752), reduced the tax rate for ''qualified dividends'' paid to an individual shareholder to the same tax rate as capital gains for taxable years beginning after December 31, 2002, and beginning before January 1, 2009. The legislative history states, however, ''Payments in lieu of dividends are not eligible for the lower rates.'' See H.R. Rep. No. 108–94, 108th Cong., 1st Sess. 31 n.36 (2003).

Explanation of Provisions

Section 6045(a) of the Internal Revenue Code (Code) provides that every person doing business as a broker shall, when required by the Secretary, make a return showing the name and

address of each customer, together with information as required by forms and regulations. Section 6045(d) provides that brokers who transfer a customer's securities for use in a short sale or similar transaction, and receive payments in lieu of a dividend, tax-exempt interest, or other items set forth in regulations (substitute payments), must furnish the customer with a written statement identifying the payment as being in lieu of the dividend, tax-exempt interest, or other item. This section authorizes the Secretary to prescribe regulations that require brokers to file information returns that include the information contained in the written statement.

Section 1.6045–2 of the existing Income Tax Regulations provides rules for reporting substitute payments under section 6045(d). In general, § 1.6045–2(a)(3)(i) of the existing regulations excludes payments in lieu of dividends received by a broker on behalf of an individual from the broker reporting requirements of section 6045(d). Section 1.6045–2(a)(3)(ii) of the existing regulations requires reporting for certain dividend substitute payments received by a broker on behalf of an individual, such as payments in lieu of exempt interest dividends distributed by regulated investment companies.

These regulations contain amendments to the existing regulations to require reporting under section 6045(d) for payments in lieu of dividends made to individuals on or after January 1, 2003. For taxable years beginning on or after January 1, 2003, brokers must use Form 1099–MISC, ''Miscellaneous Income'', to report substitute payments to individuals, including payments in lieu of dividends.

The IRS issued interim guidance regarding provisions of the JGTRRA that affect information reporting for payments in lieu of dividends in Notice 2003–67 (2003–40 I.R.B. 752). The notice also provided guidance on the definition of loanable shares and the allocation and selection of transferred shares (that is, shares giving rise to payments in lieu of dividends to customers). The IRS intends to issue comprehensive regulations amending § 1.6045–2 in the future. The IRS anticipates that these regulations will define payments in lieu of dividends, provide rules for determining loanable shares, and provide rules for allocating and selecting transferred shares to customers. Pending issuance of further amendments to § 1.6045–2 of the existing regulations, brokers may rely on Notice 2003–67 to comply with the requirements of the JGTRRA and section 6045(d).

In addition, pending issuance of further amendments to § 1.6045–2, the IRS will permit brokers to continue to use the rules of § 1.6045–2 of the existing regulations for allocating transferred shares to customers. A broker may continue to allocate transferred shares to shares of stock that the broker has borrowed under a security agreement with the customer. In addition, if a broker uses the lottery method of allocation and selection of loanable shares specified in § 1.6045–2(f)(2)(ii), the broker may make the selection of the transferred shares within the individual pool described in § 1.6045–2(f)(2)(ii)(C) using the methods of selection of transferred shares used within the nonindividual pool as prescribed in § 1.6045–2(f)(2)(ii)(B).

Special Analyses

These final regulations are necessary to provide brokers and taxpayers with immediate guidance regarding provisions in the JGTRRA that affect information reporting for substitute payments in lieu of dividends. The regulations apply to information returns required to be filed, and information statements required to be furnished, after December 31, 2003. Based on these considerations, it is determined that these final regulations will provide brokers and taxpayers with the necessary guidance and authority to comply with the tax laws. Because of the need for immediate guidance, notice and public procedure are impracticable and contrary to the public interest pursuant to 5 U.S.C. 553(b)(B) and delayed effective date is not required pursuant to 5 U.S.C. 553(d)(3).

Because no notice of proposed rulemaking is required, the provisions of the Regulatory Flexibility Act, 5 U.S.C. 601 (*et seq.*) do not apply. Further, it has been determined that this Treasury decision is not a significant regulatory action as defined in Executive Order 12866. Therefore, a regulatory assessment is not required. Pursuant to section 7805(f) of the Code, these regulations were submitted to the Chief Counsel for Advocacy of the Small Business Administration for comment on their impact on small business.

Drafting Information

The principal author of these regulations is Michael Hara, Office of Associate Chief Counsel (Procedures and Administration), Administrative Provisions and Judicial Practice.

List of Subjects in 26 CFR Part 1

Income taxes, Reporting and recordkeeping requirements.

Adoption of Amendments to the Regulations

■ Accordingly, 26 CFR part 1 is amended as follows:

PART 1—INCOME TAXES

■ **Paragraph 1.** The authority citation for part 1 continues to read in part as follows:

Authority: 26 U.S.C. 7805 * * *

■ **Par. 2.** Section 1.6045–2 is amended by:

■ 1. Paragraph (a)(3)(i) is revised.

■ 2. The heading for paragraph (a)(3)(ii) is revised.

The revisions read as follows:

§ 1.6045–2 Furnishing statement required with respect to certain substitute payments.

(a) * * *

(3) * * * (i) *In general.* Except as otherwise provided in paragraph (a)(3)(ii) of this section, for taxable years beginning before January 1, 2003, a broker that receives a substitute payment in lieu of a dividend on behalf of a customer who is an individual (''individual customer'') need not furnish a statement to the customer.

(ii) *Reporting for certain dividends.* * * *

* * * * *

Mark E. Matthews,

Deputy Commissioner for Services and Enforcement.

Approved: December 18, 2003.

Pamela F. Olson,

Assistant Secretary of the Treasury.

[FR Doc. 03–31671 Filed 12–24–03; 8:45 am]

BILLING CODE 4830–01–P

DEPARTMENT OF THE TREASURY

Internal Revenue Service

26 CFR Part 301

[TD 9106]

RIN 1545–AW99

Awards of Attorney's Fees and Other Costs Based Upon Qualified Offers

AGENCY: Internal Revenue Service (IRS), Treasury.

ACTION: Final regulations and removal of temporary regulations.

SUMMARY: This document contains final regulations relating to the qualified offer rule, including the requirements that an offer must satisfy to be treated as a

qualified offer under section 7430(g) and the requirements that a taxpayer must satisfy to qualify as a prevailing party by reason of having made a qualified offer. The regulations implement certain changes made by section 3101(e) of the Internal Revenue Service Restructuring and Reform Act of 1998. The final regulations affect taxpayers seeking attorney's fees and costs.

DATES: *Effective Date:* These regulations are effective December 24, 2003.

Applicability Date: These regulations apply to qualified offers postmarked or delivered after December 24, 2003, in administrative or court proceedings described in section 7430.

FOR FURTHER INFORMATION CONTACT: Tami C. Belouin (202) 622–7950 (not a toll-free number).

SUPPLEMENTARY INFORMATION:

Background

These final regulations contain amendments to the Procedure and Administration Regulations (26 CFR part 301) reflecting changes to section 7430 made by section 3101(e) of the Internal Revenue Service Restructuring and Reform Act of 1998, Public Law 105–206 (112 Stat. 686), to recover reasonable administrative and litigation costs in a court proceeding with respect to the determination or refund of any tax, interest or penalty. Proposed and temporary regulations under sections 7430(c)(4)(E) and 7430(g) were contemporaneously issued on January 3, 2001 (REG–121928–98, TD 8922, C.B. 2001–1 [66 FR 725]). Written comments were submitted in response to the proposed regulations and are discussed in more detail below. The proposed regulations are adopted as revised by this Treasury decision.

Explanation of Revisions and Summary of Comments

These final regulations generally adopt the provisions of the proposed regulations. The changes to the proposed regulations reflected in these final regulations, as well as the comments received, are discussed below.

1. Adjustments Affected by the Outcome of Another Proceeding

A taxpayer's tax liability may be affected by the outcome of a separate court or administrative proceeding. The proposed regulations stated that the portion of the liability to be fully resolved, by stipulation of the parties, through another proceeding is ignored for purposes of applying the qualified offer rule. One commentator requested clarification regarding this rule. The final regulations clarify this rule and state that the types of proceeding contemplated include, but are not limited to, state or Federal court proceedings. For example, a taxpayer's tax liability may be affected by the outcome of a separate court proceeding, such as a probate, tort liability, or trademark action.

2. Specified Amount of Offer

The proposed regulations provided that a qualified offer must state a specific dollar amount. Commentators noted that there are instances in which it would be difficult to calculate the taxpayer's tax liability and offer a specific dollar amount. To address those situations, the final regulations provide that a qualified offer may specify either a dollar amount of liability or a percentage of the adjustments at issue.

3. Requirement To Disclose All Relevant Information

In order for an offer to be treated as a qualified offer, the proposed regulations required a taxpayer to disclose all relevant information concerning any issue raised by the taxpayer subsequent to the first letter of proposed deficiency which allows the taxpayer an opportunity for administrative review in the IRS Office of Appeals that remained unresolved at the time the qualified offer was made. This disclosure had to occur contemporaneously with or prior to the making of the qualified offer. One commentator requested that this requirement be modified to lower the standard. The final regulations do not adopt this comment because the proposed regulations reflected the standard set out in Treas. Reg. § 301.7430–1 for exhaustion of administrative remedies.

4. End of Qualified Offer Period

One commentator suggested that if a case is removed from the trial calendar within 30 days of the trial date, the period for making a qualified offer should be reopened. The final regulations do not adopt this comment. The Treasury Department and the IRS do not believe that the purpose of the statute would be furthered if a taxpayer were permitted to submit a qualified offer after the period for doing so has expired, even if the case subsequently is continued. Like the statute of limitations, once the qualified offer period has expired, it should not be revived.

5. Multiple Tax Years

The proposed regulations do not specifically address the requirements for making a valid qualified offer when multiple tax years are at issue in a court or administrative proceeding. One commentator requested clarification of the application of the qualified offer rule in these situations. The final regulations provide that if adjustments in different tax years arise from separate and distinct issues such that the resolution of issues in one or more tax years will not affect the taxpayer's liability in one or more of the other years at issue in the proceeding, then a qualified offer may be made for less than all of the tax years involved in the proceeding. A qualified offer, however, must resolve all of the issues for the tax years covered by the offer and also must cover all tax years in the proceeding affected by those issues. A tax year (affected year) is affected by an issue if the treatment of the issue in another tax year involved in the proceeding necessarily affects the treatment of the issue in the affected year. The final regulations include three new examples illustrating the operation of the qualified offer rule in cases involving multiple tax years.

6. Settlement After Certain Court Rulings

A federal tax case may be settled after a court has ruled on a motion relating to the merits of one or more of the adjustments covered by a qualified offer, even if the ruling does not fully resolve those adjustments. For example, a court's granting of a motion for partial summary judgment may resolve the underlying legal issue for an adjustment covered by a qualified offer but still leave open issues of substantiation or valuation. The parties at that time may resolve the adjustment based on the court's ruling and the parties' evaluation of the remaining issues not addressed by the court's ruling that affect that adjustment. The final regulations provide that if one or more adjustments covered by a qualified offer are settled following a ruling by the court that substantially resolves those adjustments, then those adjustments will not be treated as having been settled prior to the entry of the judgment by the court and instead will be treated as amounts included in the judgment as a result of the court's determinations. Whether an adjustment covered by a qualified offer is substantially resolved by a court ruling will depend on the facts and circumstances, including the scope of the ruling and the nature and importance of the issues affecting the

adjustment that remain to be resolved after the court ruling. The final regulations further provide, however, that rulings relating to discovery, admissibility of evidence, and burden of proof are not treated as rulings that substantially resolve adjustments covered by a qualified offer. These changes have been made in response to the Tax Court's opinion in *Gladden* v. *Commissioner,* 120 T.C. 446 (2003). The Department of Treasury and the IRS will give further consideration to this issue and may issue additional guidance regarding the matter in the future.

7. Spousal Defenses

The proposed regulations do not address specifically how spousal defenses affect the qualified offer rule. The preamble to the temporary regulations stated that the qualified offer rule applies in multiple taxpayer situations, such as those involving joint returns, but did not address the potential aggregation or segregation of the qualified offer or liability in situations that may present special circumstances, such as claims for innocent spouse relief. Commentators requested more specific rules addressing multiple taxpayer situations. The Treasury Department and the IRS have decided not to include additional rules involving multiple taxpayer situations in the final regulations. As the law in this area continues to evolve, the Treasury Department and the IRS may give further consideration to the issues raised and may issue additional guidance regarding how the qualified offer rule applies in these situations.

8. Recovery of Fees Relating to Settled Issues

The proposed regulations provided that a prevailing party may not recover fees under the qualified offer rule for any issue that is settled. Recovery is limited to issues that are actually determined by a court. One commentator recommended that the final regulations permit the recovery of fees attributable to adjustments that are settled. The final regulations do not adopt this comment. Section 7430(c)(4)(E)(ii)(I) provides that any case resolved pursuant to a settlement is not eligible for recovery of fees under the qualified offer rule. The qualified offer rule was enacted to encourage settlements. Requiring the government to pay administrative and litigation costs with respect to issues resolved exclusively pursuant to a settlement would be contrary to that goal.

9. Delivery of Qualified Offer to the Proper Party

The proposed regulations specify where an offer must be delivered in order to be treated as a qualified offer. One commentator requested further clarification of these provisions and greater flexibility with respect to delivery locations. The Treasury Department and the IRS have considered this comment but no change has been made to the regulations because the regulations already provide specific instructions for the delivery of an offer under a variety of circumstances, as well as a default location for all other situations. Thus, the provision is sufficiently comprehensive. With respect to the request for greater flexibility, the comment was not adopted because it is important that a qualified offer be received by the office with jurisdiction over the case at the time the qualified offer is made in order that the government may act expeditiously on the offer. The locations specified in the regulations are designed to achieve that objective.

Special Analyses

It has been determined that this Treasury decision is not a significant regulatory action as defined in Executive Order 12866. Therefore, a regulatory assessment is not required. It also has been determined that section 553(b) of the Administrative Procedure Act (5 U.S.C. chapter 5) does not apply to these regulations and, because these regulations do not impose a collection of information requirement on small entities, the Regulatory Flexibility Act (5 U.S.C. chapter 6) does not apply. Therefore, a Regulatory Flexibility Analysis is not required. Pursuant to section 7805(f) of the Internal Revenue Code, the proposed regulations preceding these regulations were submitted to the Chief Counsel for Advocacy of the Small Business Administration for comment on their impact on small business.

Drafting Information

The principal author of these regulations is Tami C. Belouin, Office of the Associate Chief Counsel (Procedure and Administration), Administrative Provisions and Judicial Practice Division.

List of Subjects in 26 CFR Part 301

Employment taxes, Estate taxes, Excise taxes, Gift taxes, Income taxes, Penalties, Reporting and recordkeeping requirements.

Adoption of Amendments to the Regulations

■ Accordingly, 26 CFR part 301 is amended as follows:

PART 301—PROCEDURE AND ADMINISTRATION

■ **Paragraph 1.** The authority citation for part 301 continues to read in part as follows:

Authority: 26 U.S.C. 7805 * * *

■ **Par. 2.** Section 301.7430–7 is added to read as follows:

§ 301.7430–7 Qualified offers.

(a) *In general.* Section 7430(c)(4)(E) (the qualified offer rule) provides that a party to a court proceeding satisfying the timely filing and net worth requirements of section 7430(c)(4)(A)(ii) shall be treated as the prevailing party if the liability of the taxpayer pursuant to the judgment in the proceeding (determined without regard to interest) is equal to or less than the liability of the taxpayer which would have been so determined if the United States had accepted the last qualified offer of the party as defined in section 7430(g). For purposes of this section, the term *judgment* means the cumulative determinations of the court concerning the adjustments at issue and litigated to a determination in the court proceeding. In making the comparison between the liability under the qualified offer and the liability under the judgment, the taxpayer's liability under the judgment is further modified by the provisions of paragraph (b)(3) of this section. The provisions of the qualified offer rule do not apply if the taxpayer's liability under the judgment, as modified by the provisions of paragraph (b)(3) of this section, is determined exclusively pursuant to a settlement, or to any proceeding in which the amount of tax liability is not in issue, including any declaratory judgment proceeding, any proceeding to enforce or quash any summons issued pursuant to the Internal Revenue Code (Code), and any action to restrain disclosure under section 6110(f). If the qualified offer rule applies to the court proceeding, the determination of whether the liability under the qualified offer would have equaled or exceeded the liability pursuant to the judgment is made by reference to the last qualified offer made with respect to the tax liability at issue in the administrative or court proceeding. An award of reasonable administrative and litigation costs under the qualified offer rule only includes those costs incurred on or after the date of the last qualified offer and is limited

to those costs attributable to the adjustments at issue at the time the last qualified offer was made that were included in the court's judgment other than by reason of settlement. The qualified offer rule is inapplicable to reasonable administrative or litigation costs otherwise awarded to a taxpayer who is a prevailing party under any other provision of section 7430(c)(4). This section sets forth the requirements to be satisfied for a taxpayer to be treated as a prevailing party by reason of the taxpayer making a qualified offer, as well as the circumstances leading to the application of the exceptions, special rules, and coordination provisions of the qualified offer rule. Furthermore, this section sets forth the elements necessary for an offer to be treated as a qualified offer under section 7430(g).

(b) *Requirements for treatment as a prevailing party based upon having made a qualified offer*—(1) *In general.* In order to be treated as a prevailing party by reason of having made a qualified offer, the liability of the taxpayer for the type or types of tax and the taxable year or years at issue in the proceeding (as calculated pursuant to paragraph (b)(2) of this section), based on the last qualified offer (as defined in paragraph (c) of this section) made by the taxpayer in the court or administrative proceeding, must equal or exceed the liability of the taxpayer pursuant to the judgment by the court for the same type or types of tax and the same taxable year or years (as calculated pursuant to paragraph (b)(3) of this section). Furthermore, the taxpayer must meet the timely filing and net worth requirements of section 7430(c)(4)(A)(ii). If all of the adjustments subject to the last qualified offer are settled prior to the entry of the judgment by the court, the taxpayer is not a prevailing party by reason of having made a qualified offer. The taxpayer may, however, still qualify as a prevailing party if the requirements of section 7430(c)(4)(A) are met. If one or more adjustments covered by a qualified offer (see paragraph (c)(3)) are settled following a ruling by the court that substantially resolves those adjustments, then those adjustments will not be treated as having been settled prior to the entry of the judgment by the court and instead will be treated as amounts included in the judgment as a result of the court's determinations. For purposes of the preceding sentence, rulings relating to discovery, admissibility of evidence, and burden of proof are not rulings that substantially resolve adjustments covered by a qualified offer.

(2) *Liability under the last qualified offer.* For purposes of paragraph (b)(1) of this section, the taxpayer's liability under the last qualified offer is the change in the taxpayer's liability that would have resulted if the United States had accepted the taxpayer's last qualified offer on all of the adjustments that were at issue in the administrative or court proceeding at the time that the offer was made compared to the amount shown on the return or returns (or as previously adjusted). The portion of a taxpayer's liability that is attributable to adjustments raised by either party after the making of the last qualified offer is not included in the calculation of the liability under that offer. The taxpayer's liability under the last qualified offer is calculated without regard to adjustments that the parties have stipulated will be resolved in accordance with the outcome of a separate pending Federal, state, or other judicial or administrative proceeding. For example, the parties may stipulate that the taxpayer's liability will be resolved in accordance with the outcome of an alternative dispute resolution proceeding or a separate court proceeding, such as a probate, tort liability, or trademark action. Furthermore, the taxpayer's liability under the last qualified offer is calculated without regard to interest, unless the taxpayer's liability for, or entitlement to, interest is a contested issue in the administrative or court proceeding and is one of the adjustments included in the last qualified offer.

(3) *Liability pursuant to the judgment.* For purposes of paragraph (b)(1) of this section, the taxpayer's liability pursuant to the judgment is the change in the taxpayer's liability resulting from amounts contained in the judgment as a result of the court's determinations, and amounts contained in settlements not included in the judgment, that are attributable to all adjustments that were included in the last qualified offer compared to the amount shown on the return or returns (or as previously adjusted). This liability includes amounts attributable to adjustments included in the last qualified offer and settled by the parties prior to the entry of judgment regardless of whether those amounts are actually included in the judgment entered by the court. The taxpayer's liability pursuant to the judgment does not include amounts attributable to adjustments that are not included in the last qualified offer, even if those amounts are actually included in the judgment entered by the court. The taxpayer's liability under the judgment is calculated without regard to adjustments that the parties have stipulated will be resolved in accordance with the outcome of a separate pending Federal, state, or other judicial or administrative proceeding. Furthermore, the taxpayer's liability pursuant to the judgment is calculated without regard to interest, unless the taxpayer's liability for, or entitlement to, interest is a contested issue in the administrative or court proceeding and is one of the adjustments included in the last qualified offer. Where adjustments raised by either party subsequent to the making of the last qualified offer are included in the judgment entered by the court, or are settled prior to the court proceeding, the taxpayer's liability pursuant to the judgment is calculated by treating the subsequently raised adjustments as if they had never been raised.

(c) *Qualified offer*—(1) *In general.* A qualified offer is defined in section 7430(g) to mean a written offer which—

(i) Is made by the taxpayer to the United States during the qualified offer period;

(ii) Specifies the offered amount of the taxpayer's liability (determined without regard to interest, unless interest is a contested issue in the proceeding);

(iii) Is designated at the time it is made as a qualified offer for purposes of section 7430(g); and

(iv) By its terms, remains open during the period beginning on the date it is made and ending on the earliest of the date the offer is rejected, the date the trial begins, or the 90th day after the date the offer is made.

(2) *To the United States.* (i) A qualified offer is made to the United States when it is delivered to the office or personnel within the Internal Revenue Service, Office of Appeals, Office of Chief Counsel (including field personnel) or Department of Justice that has jurisdiction over the tax matter at issue in the administrative or court proceeding. If those offices or persons are unknown to the taxpayer making the qualified offer, the taxpayer may deliver the offer to the appropriate office, as follows:

(A) If the taxpayer's initial pleading in a court proceeding has been answered, the taxpayer may deliver the offer to the office that filed the answer.

(B) If the taxpayer's petition in the Tax Court has not yet been answered, the taxpayer may deliver the offer to the Office of Chief Counsel, 1111 Constitution Avenue, NW., Washington, DC 20224.

(C) If the taxpayer's initial pleading in any Federal court, other than the Tax

Court, has not yet been answered, the taxpayer may deliver the offer to the Attorney General of the United States, 950 Pennsylvania Ave., NW., Washington, DC 20530–0001. For a suit brought in a United States district court, a copy of the offer should also be delivered to the United States Attorney for the district in which the suit was brought.

(D) In any other situation, the taxpayer may deliver the offer to the office that sent the taxpayer the first letter of proposed deficiency which allows the taxpayer an opportunity for administrative review in the Internal Revenue Service Office of Appeals.

(ii) Until an offer is received by the appropriate personnel or office under this paragraph (c)(2), it is not considered to have been made, with the following exception. If the offer is deposited in the United States mail, in an envelope or other appropriate wrapper, postage prepaid, properly addressed to the appropriate personnel or office under this paragraph (c)(2), the date of the United States postmark stamped on the cover in which the offer is mailed shall be deemed to be the date of receipt of that offer by the addressee. If any offer is deposited with a designated delivery service, as defined in section 7502(f)(2), in lieu of the United States mail, the provisions of section 7502(f)(1) shall apply in determining whether that offer qualifies for this exception.

(3) *Specifies the offered amount.* A qualified offer specifies the offered amount if it clearly specifies the amount for the liability of the taxpayer, calculated as set forth in paragraph (b)(2) of this section. The offer may be a specific dollar amount of the total liability or a percentage of the adjustments at issue in the proceeding at the time the offer is made. This amount must be with respect to all of the adjustments at issue in the administrative or court proceeding at the time the offer is made and only those adjustments. The specified amount must be an amount, the acceptance of which by the United States will fully resolve the taxpayer's liability, and only that liability (determined without regard to adjustments that the parties have stipulated will be resolved in accordance with the outcome of a separate pending Federal, state, or other judicial or administrative proceeding, or interest, unless interest is a contested issue in the proceeding) for the type or types of tax and the taxable year or years at issue in the proceeding. In cases involving multiple tax years, if adjustments in different tax years arise from separate and distinct issues such that the resolution of issues in one or more tax years will not affect the taxpayer's liability in one or more of the other tax years in the proceeding, then a qualified offer may be made for less than all of the tax years involved. A qualified offer, however, must resolve all of the issues for the tax years covered by the offer and also must cover all tax years in the proceeding affected by those issues. A tax year (affected year) is affected by an issue if the treatment of the issue in another tax year involved in the proceeding necessarily affects the treatment of the issue in the affected year.

(4) *Designated at the time it is made as a qualified offer.* An offer is not a qualified offer unless it designates in writing at the time it is made that it is a qualified offer for purposes of section 7430(g). An offer made at a time when one or more adjustments not included in the first letter of proposed deficiency which allows the taxpayer an opportunity for administrative review in the Internal Revenue Service Office of Appeals have been raised by the taxpayer and remain unresolved, is not considered to be a qualified offer unless contemporaneously or prior to the making of the offer, the taxpayer has provided the United States with the substantiation and legal and factual arguments necessary to allow for informed consideration of the merits of those adjustments. For example, a taxpayer will be considered to have provided the United States with the necessary substantiation and legal and factual arguments if the taxpayer (or a recognized representative of the taxpayer described in § 601.502 of this chapter) participates in an Appeals office conference, participates in an Area Counsel conference, or confers with the Department of Justice, and at that time, discloses all relevant information. All relevant information includes, but is not limited to, the legal and factual arguments supporting the taxpayer's position on any adjustments raised by the taxpayer after the issuance of the first letter of proposed deficiency which allows the taxpayer an opportunity for administrative review in the Internal Revenue Service Office of Appeals. A taxpayer has disclosed all relevant information if the taxpayer has supplied sufficient information to allow informed consideration of the taxpayer's tax matter to the extent the information and its relevance were known or should have been known to the taxpayer at the time of the conference.

(5) *Remains open.* A qualified offer must, by its terms, remain open for acceptance by the United States from the date it is made, as defined in paragraph (c)(2)(ii) of this section, until the earliest of the date it is rejected in writing by a person with authority to reject the offer, the date the trial begins, or the 90th day after being received by the United States. The offer, by its written terms, may remain open after the occurrence of one or more of the above-referenced events. Once made, the period during which a qualified offer remains open may be extended by the taxpayer prior to its expiration, but an extension cannot be used to make an offer meet the minimum period for remaining open required by this paragraph (c)(5).

(6) *Last qualified offer.* A taxpayer may make multiple qualified offers during the qualified offer period. For purposes of the comparison under paragraph (b) of this section, the making of a qualified offer supersedes any previously made qualified offers. In making the comparison described in paragraph (b) of this section, only the qualified offer made most closely in time to the end of the qualified offer period is compared to the taxpayer's liability under the judgment.

(7) *Qualified offer period.* To constitute a qualified offer, an offer must be made during the qualified offer period. The qualified offer period begins on the date on which the first letter of proposed deficiency which allows the taxpayer an opportunity for administrative review in the Internal Revenue Service Office of Appeals is sent to the taxpayer. For this purpose, the date of the notice of claim disallowance will begin the qualified offer period in a refund case. If there has been no notice of claim disallowance in a refund case, the qualified offer period begins on the date on which the answer or other responsive pleading is filed with the court. The qualified offer period ends on the date which is thirty days before the date the case is first set for trial. In determining when the qualified offer period ends for cases in the Tax Court and other Federal courts using calendars for trial, a case will be considered set for trial on the date scheduled for the calendar call. A case may be removed from a trial calendar at any time. Thus, a case may be removed from a trial calendar before the date that precedes by thirty days the date scheduled for that trial calendar. The qualified offer period does not end until the case remains on a trial calendar on the date that precedes by 30 days the scheduled date of the calendar call for that trial session. The qualified offer period may not be extended beyond the periods set forth in this paragraph (c)(7), although the period during which a qualified offer remains open may extend

beyond the end of the qualified offer period.

(d) [Reserved]

(e) *Examples.* The following examples illustrate the provisions of this section:

Example 1. Definition of a judgment. The Internal Revenue Service (IRS) audits Taxpayer A for year X and issues a notice of proposed deficiency (30-day letter) proposing to disallow deductions 1, 2, 3, and 4. A files a protest and participates in a conference with the Internal Revenue Service Office of Appeals (Appeals). Appeals allows deduction 1, and issues a statutory notice of deficiency for deductions 2, 3, and 4. A's petition to the United States Tax Court for year X never mentions deduction 2. Prior to trial, A concedes deduction 3. After the trial, the Tax Court issues an opinion allowing A to deduct a portion of deduction 4. As used in paragraph (a) of this section, the term judgment means the cumulative determinations of the court concerning the adjustments at issue in the court proceeding. Thus, the term judgment does not include deduction 1 because it was never at issue in the court proceeding. Similarly, the term judgment does not include deduction 2 because it was not placed at issue by A in the court proceeding. Although deduction 3 was at issue in the court proceeding, it is not included in the term judgment because it was not determined by the court, but rather by concession or settlement. For purposes of section 7430(c)(4)(E), the term judgment only includes the portion of deduction 4 disallowed by the Tax Court.

Example 2. Liability under the offer and liability under the judgment. Assume the same facts as in *Example 1* except that A makes a qualified offer after the Appeals conference, which is not accepted by the IRS. A's offer is with respect to all adjustments at issue at that time. Those adjustments are deductions 2, 3, and 4. At the conclusion of the litigation, A's entitlement to an award based upon the qualified offer will depend, among other things, on a comparison of the change in A's liability for income tax for year X resulting from the judgment of the Tax Court with the change that would have resulted had the IRS accepted A's qualified offer. In making this comparison, the term judgment (as discussed in *Example 1*) is modified by including the amounts of settled or conceded adjustments that were at issue at the time the qualified offer was made. Any settled or conceded adjustments that were not at issue at the time the qualified offer was made, either because the settlement or concession occurred before the offer or because the adjustment was not raised until after the offer, are not included in the comparison. Thus, A's offer on deductions 2, 3, and 4 is compared with the change in A's liability resulting from the Tax Court's determination of deduction 4, and the concessions of issues 2 and 3 by A.

Example 3. Offer must resolve full liability. Assume the same facts as in *Example 2* except that A's offer after the Appeals conference explicitly states that it is only with respect to adjustments 2 and 3 and not with respect to adjustment 4. Even if A's liability pursuant to the judgment, calculated under paragraph (b)(3) of this section as illustrated in *Example 2,* is equal to or less than it would have been had the IRS accepted A's offer after the Appeals conference, A is not a prevailing party under section 7430(c)(4)(E). A qualified offer must include all adjustments at issue at the time the offer is made. Since A's offer excluded adjustment 4, which was an adjustment at issue at the time the offer was made, it does not constitute a qualified offer pursuant to paragraph (b)(2) of this section.

Example 4. Offer must resolve full liability. Assume the same facts as in *Example 1,* except that A makes a qualified offer that is accepted by the IRS. After the offer is accepted, A attempts to reduce the amount A will pay pursuant to the offer by applying net operating loss carryovers to the years in issue. Because the net operating losses were not at issue when the offer was made, A's offer was a qualified offer. Whether A is entitled to apply net operating losses to reduce the amount stated in the offer will depend upon the application of contract principles, local court rules, and, because net operating losses are at issue, section 6511(d) and related provisions.

Example 5. Qualified offer rule for multiple tax years, partial resolution offer is a qualified offer. Taxpayer B receives a notice of deficiency for taxable years 2001, 2002, and 2003. For 2001, the statutory notice disallows business deductions. For 2002, the statutory notice increases income for unreported lottery winnings. For 2003, the statutory notice disallows a child care credit. B submits a qualified offer only with respect to 2002. Since the adjustments for the three tax years are separate and distinct, B may submit a qualified offer for a single year. If B's liability under the judgment is equal to or less than the qualified offer with respect to 2002, irrespective of 2001 and 2003, B is a prevailing party for 2002 for purposes of section 7430(g). Assuming B satisfies the remaining requirements of section 7430, B may recover reasonable administrative and litigation costs that are attributable to 2002 from the date of the qualified offer. To qualify for any costs with respect to 2001 or 2003, B must satisfy the requirements of section 7430(c)(4).

Example 6. Qualified offer rule for multiple tax years, partial resolution offer is not a qualified offer. Assume the same facts as in *Example 5* except that with respect to 2002, in addition to increasing B's income for the unreported lottery winnings, the statutory notice also disallows a charitable contribution deduction. B submits a settlement offer that purports to be a qualified offer, but only covers the unreported lottery winnings. B's offer is not a qualified offer because it does not address the charitable contribution issue, and thus, does not fully resolve B's liability for 2002.

Example 7. Qualified offer rule for multiple tax years, partial resolution offer is not a qualified offer. Taxpayer C receives a notice of deficiency for taxable years 2001, 2002, and 2003 adjusting the amount of a depreciation deduction due to the Internal Revenue Service's increase to the recovery period. C submits a settlement offer relating only to 2003 that purports to be a qualified offer. C's offer is not a qualified offer because the issue in the three tax years is not separable given that the treatment of the issue in one of the years necessarily affects the treatment of the issue in the other years, and C's offer only applies to one of the years in the proceeding. In cases involving multiple tax years with nonseparable tax issues affecting all tax years, an offer is not a qualified offer unless it resolves the liability for all tax years at issue in the administrative or judicial proceeding.

Example 8. Qualified offer rule inapplicable when all issues settled. Taxpayer D receives a notice of proposed deficiency (30-day letter) proposing to disallow both a personal interest deduction in the amount of $10,000 (Adjustment 1), and a charitable contribution deduction in the amount of $2,000 (Adjustment 2), and to include in income $4,000 of unreported interest income (Adjustment 3). D timely files a protest with Appeals. At the Appeals conference, D presents substantiation for the charitable contribution and presents arguments that the interest paid was deductible mortgage interest and that the interest received was held in trust for Taxpayer E. At the conference, D also provides the Appeals officer assigned to D's case a written offer to settle the case for a deficiency of $2,000, exclusive of interest. The offer states that it is a qualified offer for purposes of section 7430(g) and that it will remain open for acceptance by the IRS for a period in excess of 90 days. After considering D's substantiation and arguments, the Appeals Officer accepts the $2,000 offer to settle the case in full. Although D's offer is a qualified offer, because all three adjustments contained in the qualified offer were settled, the qualified offer rule is inapplicable.

Example 9. Qualified offer rule inapplicable when all issues contained in the qualified offer are settled; subsequently raised adjustments ignored. Assume the same facts as in *Example 8* except that D's qualified offer was for a deficiency of $1,800 and the IRS rejected that offer. Subsequently, the IRS issued a statutory notice of deficiency disallowing the three adjustments contained in *Example 8,* and, in addition, disallowing a home office expense in the amount of $5,000 (Adjustment 4). After petitioning the Tax Court, D presents the field attorney assigned to the case with a written offer, which is not designated as a qualified offer for purposes of section 7430(g), to settle the three adjustments that had been the subject of the qualified offer, plus adjustment 4, for a total deficiency of $2,500. After negotiating with D, a settlement is reached on the three adjustments that were the subject of the rejected qualified offer, for a deficiency of $1,800. Adjustment 4 is litigated in the Tax Court and the court determines that D is entitled to the full $5,000 deduction for that adjustment. Consequently, a decision is entered by the Tax Court reflecting the $1,800 settlement amount, which matches exactly the amount of D's only qualified offer in the case. Although the determined liability for adjustments 1, 2, and 3 equals that of the rejected qualified offer, because all three adjustments contained in the qualified offer

were settled, the qualified offer rule is inapplicable.

Example 10. Exclusion of adjustments made after the qualified offer is made. Assume the same facts as in *Example 9* except the settlement is reached only on adjustments 1 and 2, for a liability of $1,500. Adjustments 3 and 4 are tried in the Tax Court and in accordance with the court's opinion, the taxpayer has a $300 deficiency attributable to adjustment 3, and a $1,550 deficiency attributable to adjustment 4. Consequently, a decision is entered reflecting the $1,500 settled amount, the $300 liability on adjustment 3, and the $1,550 liability on adjustment 4. The $3,350 deficiency reflected in the Tax Court's decision exceeds the last (and only) qualified offer made by D. For purposes of determining whether D is a prevailing party as a result of having made a qualified offer in the proceeding, the liability attributable to adjustment 4, which was raised after the last qualified offer was made, is not included in the comparison of D's liability under the judgment with D's offered liability under the last qualified offer. Thus, D's $1,800 liability under the judgment, as modified for purposes of the qualified offer rule comparison, is equal to D's offered liability under the last qualified offer. Because D's liability under the last qualified offer equals or exceeds D's liability under the judgment, as calculated under paragraph (b)(3) of this section, D is a prevailing party for purposes of section 7430. Assuming D satisfies the remaining requirements of section 7430, D may recover those reasonable administrative and litigation costs attributable to adjustment 3. To qualify for any further award of reasonable administrative and litigation costs, D must satisfy the requirements of section 7430(c)(4)(A).

Example 11. Qualified offer in a refund case. Taxpayer E timely files an amended return claiming a refund of $1,000. This refund claim results from several omitted deductions which, if allowed, would reduce E's tax liability from $10,000 to $9,000. E receives a notice of claim disallowance and files a complaint with the appropriate United States District Court. Subsequently, E makes a qualified offer for a refund of $500. The offer is rejected and after trial the court finds E is entitled to a refund of $700. The change in E's liability from the tax shown on the return that would have resulted from the acceptance of E's qualified offer is a reduction in that liability of $500. The change in E's liability from the tax shown on the return resulting from the judgment of the court is a reduction in that liability of $700. Because E's liability under the qualified offer exceeds E's liability under the judgment, E is a prevailing party for purposes of section 7430. Assuming E satisfies the remaining requirements of section 7430, E may recover those reasonable litigation costs incurred on or after the date of the qualified offer. To qualify for any further award of reasonable administrative and litigation costs E must satisfy the requirements of section 7430(c)(4)(A).

Example 12. End of qualified offer period when case is removed from Tax Court trial calendar more than 30 days before scheduled trial calendar. Taxpayer F has petitioned the Tax Court in response to the issuance of a notice of deficiency. F receives notice that the case will be heard on the July trial session in F's city of residence. The scheduled date for the calendar call for that trial session is July 1st. On May 15th, F's motion to remove the case from the July trial session and place it on the October trial session for that city is granted. The scheduled date for the calendar call for the October trial session is October 1st. On May 31st, F delivers a qualified offer to the field attorney assigned to the case. On August 31st, F delivers a revised qualified offer to the field attorney assigned to the case. Neither offer is accepted. The case is tried during the October trial session, and at some time thereafter, a decision is entered by the court. Assume the judgment in the case, as calculated under paragraph (b)(3) of this section, is greater than the amount offered, as calculated under paragraph (b)(2) of this section, in the qualified offer delivered on May 31st, but less than the amount offered, as similarly calculated, in the qualified offer delivered on August 31st. Because the qualified offer period did not end until September 1st, and the offer of August 31st otherwise satisfied the requirements of paragraph (c) of this section, the offer delivered on August 31st is a qualified offer. Furthermore, because the August 31st qualified offer is closer in time to the end of the qualified offer period than the May 31st qualified offer, the August 31st qualified offer is the last qualified offer made by F. Consequently, the August 31st offer is the qualified offer that is compared to the judgment for purposes of determining whether F is a prevailing party under section 7430(c)(4)(E). Because F's liability under the August 31st qualified offer equals or exceeds F's liability under the judgment as calculated under paragraph (b)(3) of this section, F is a prevailing party for purposes of section 7430.

Example 13. End of qualified offer period when case is removed from Tax Court trial calendar less than 30 days before scheduled trial calendar. Assume the same facts as in *Example 12* except that F's motion was granted on June 15th. Because the qualified offer period ended on June 1st when the case remained on the July trial session on the date that preceded by 30 days the scheduled date of the calendar call for that trial session, the offer delivered on May 31st was F's last qualified offer. The August 31st offer is not a qualified offer for purposes of this rule. Consequently, F is not a prevailing party under the qualified offer rule. Therefore, F must satisfy the requirements of section 7430(c)(4)(A) to qualify for any award of reasonable administrative and litigation costs.

Example 14. When a qualified offer can be made and to whom it must be made. During the examination of Taxpayer G's return, the IRS issues a notice of deficiency without having first issued a 30-day letter. After receiving the notice of deficiency G timely petitions the Tax Court. The next day G mails an offer to the office that issued the notice of deficiency, which offer satisfies the requirements of paragraphs (c)(3) through (6) of this section. This is the only written offer made by G during the administrative or court proceeding, and by its terms it is to remain open for a period in excess of 90 days after the date of mailing to the office issuing the notice of deficiency. The office that issued the notice of deficiency transmitted the offer to the field attorney with jurisdiction over the Tax Court case. After answering the case, the field attorney refers the case to Appeals pursuant to Rev. Proc. 87–24 (1987–1 C.B. 720). See § 601.601(d)(2)(ii)(*b*) of this chapter. After careful consideration, Appeals rejects the offer and holds a conference with G during which some adjustments are settled. The remainder of the adjustments are tried in the Tax Court and G's liability resulting from the Tax Court's determinations, when added to G's liability resulting from the settled adjustments, is less than G's liability would have been under the offer rejected by Appeals. Because the Tax Court case had not yet been answered when the offer was sent, G properly mailed the offer to the office that issued the notice of deficiency. Thus, G's offer satisfied the requirements of paragraph (c)(2) of this section. Furthermore, even though G did not receive a 30-day letter, G's offer was made after the beginning of the qualified offer period, satisfying the requirements of paragraph (c)(7) of this section, because the issuance of the statutory notice provided G with notice of the IRS's determination of a deficiency, and the docketing of the case provided G with an opportunity for administrative review in the Internal Revenue Service Office of Appeals under Rev. Proc. 87–24. See § 601.601(d)(2)(ii)(*b*) of this chapter. Because G's offer satisfied all of the requirements of paragraph (c) of this section, the offer was a qualified offer and G is a prevailing party.

Example 15. Substitution of parties permitted under last qualified offer. Taxpayer H receives a 30-day letter and participates in a conference with the Office of Appeals but no agreement is reached. Subsequently, H receives a notice of deficiency and petitions the Tax Court. Upon receiving the Internal Revenue Service's answer to the petition, H sends a qualified offer to the field attorney who signed the answer, by United States mail. The qualified offer stated that it would remain open for more than 90 days. Thirty days after making the offer, H dies and, on motion under Rule 63(a) of the Tax Court's Rules of Practice and Procedure by H's personal representative, I is substituted for H as a party in the Tax Court proceeding. I makes no qualified offers to settle the case and the case proceeds to trial, with the Tax Court issuing an opinion partially in favor of I. Even though I was not a party when the qualified offer was made by H, that offer constitutes a qualified offer because by its terms, when made, it was to remain open until at least the earlier of the date it is rejected, the date of trial, or 90 days. If the liability of I under the qualified offer, as determined under paragraph (b)(2) of this section, equals or exceeds the liability under the judgment of the Tax Court, as determined under paragraph (b)(3) of this section, I will be a prevailing party for purposes of an award of reasonable litigation costs under section 7430.

(g) *Effective date.* This section is applicable with respect to qualified offers made in administrative or court proceedings described in section 7430 after December 24, 2003.

§ 301.7430–7T [Removed]

■ **Par. 3.** Section 301.7430–7T is removed.

Mark E. Matthews,

Deputy Commissioner for Services and Enforcement.

Approved: December 19, 2003.

Pamela F. Olson,

Assistant Secretary of the Treasury.

[FR Doc. 03–31822 Filed 12–24–03; 8:45 am]

BILLING CODE 4830–01–P

DEPARTMENT OF JUSTICE

28 CFR Part 28

[OAG 101; AG Order No. 2699–2003]

RIN 1105–AA78

Regulations Under the DNA Analysis Backlog Elimination Act of 2000

AGENCY: Department of Justice.

ACTION: Final rule.

SUMMARY: The Department of Justice is publishing this final rule to implement section 3 and related provisions of the DNA Analysis Backlog Elimination Act of 2000, as amended by the USA PATRIOT Act. The rule specifies the Federal offenses that will be treated as qualifying offenses for purposes of collecting DNA samples from Federal offenders, sets forth the responsibilities of the Federal Bureau of Prisons for collecting DNA samples from individuals in its custody, and sets forth related responsibilities of the Federal Bureau of Investigation for analyzing and indexing DNA samples.

DATES: *Effective date:* This rule is effective January 28, 2004.

FOR FURTHER INFORMATION CONTACT: David J. Karp, Senior Counsel, Office of Legal Policy. Telephone: (202) 514–3273.

SUPPLEMENTARY INFORMATION: All 50 states authorize the collection and analysis of DNA samples from convicted State offenders, and entry of resulting information into the Combined DNA Index System (''CODIS''), which the Federal Bureau of Investigation (''FBI'') has established pursuant to 42 U.S.C. 14132. The DNA Analysis Backlog Elimination Act of 2000 (the ''Act''), Public Law 106–546, similarly authorized the collection, analysis, and indexing of DNA samples from convicted Federal, military, and District of Columbia offenders.

Section 3 of the Act addresses the offenses that are to be treated as qualifying Federal offenses for purposes of DNA sample collection, which determines the categories of Federal offenders from whom DNA samples are collected. Section 3 also addresses the responsibility of the Federal Bureau of Prisons (''BOP'') and federal probation offices to collect DNA samples from offenders in their custody or supervision, and the responsibility of the FBI to analyze and index DNA samples. On June 28, 2001, the Department of Justice published an interim rule in the **Federal Register**, pursuant to subsection (e) of section 3, which provides that, with the exception of the activities of the probation offices, the section shall be carried out under regulations prescribed by the Attorney General. *See* 66 FR 34363 (June 28, 2001). The interim rule also addressed certain responsibilities of BOP and the FBI under other sections of the Act that are closely related to the matters addressed in section 3.

Subsequent to the publication of the interim rule, Congress enacted Public Law 107–56, the USA PATRIOT Act. Section 503 of the USA PATRIOT Act provided that three additional categories of offenses shall be treated for purposes of DNA sample collection as qualifying federal offenses, as determined by the Attorney General: (1) Any offense listed in section 2332b(g)(5)(B) of title 18, United States Code; (2) any crime of violence (as defined in section 16 of title 18, United States Code); and (3) any attempt or conspiracy to commit any of the above offenses. See 42 U.S.C. 14135a(d)(2). The Department of Justice published a proposed rule in the **Federal Register** on March 11, 2003, to implement this expanded sample collection authority. See 68 FR 11481 (March 11, 2003).

The Department received comments from two individuals concerning the interim rule published on June 28, 2001. No comments were received concerning the proposed rule published on March 11, 2003. One commenter on the interim rule claimed that the rule violated numerous provisions of the Constitution. The other commenter asked about the relationship of the interim rule to statute of limitations provisions and its consistency with the Constitution's prohibition of ex post facto laws. The Department of Justice has considered the constitutional question and is confident that the interim rule, the proposed rule, this final rule, and the statutory provisions that they implement, are consistent with the Constitution. See, *e.g.*, *United States* v. *Kimler*, 335 F.3d 1132 (10th Cir. 2003); *Shaffer* v. *Saffle*, 148 F.3d 1180 (10th Cir. 1998); *Rise* v. *Oregon*, 59 F.3d 1556 (9th Cir. 1995); *Gilbert* v. *Peters*, 55 F.3d 237 (7th Cir. 1995); *Jones* v. *Murray*, 962 F.2d 302 (4th Cir. 1992). But see *United States* v. *Kincade*, 345 F.3d 1095 (9th Cir. 2003). These rules have no effect on the statutory limitation periods for commencing the prosecution of crimes.

The interim rule published on June 28, 2001, added a new part 28 to title 28 CFR relating to the DNA identification system. The proposed rule published on March 11, 2003, involved a modification of § 28.2 in the new part 28, to reflect the expanded range of qualifying federal offenses authorized by section 503 of the USA PATRIOT Act. This final rule integrates the proposed rule's revision of § 28.2 with the other regulatory provisions adopted by the interim rule. The list of offenses in the final version of § 28.2 is generally the same as in the proposed rule, but includes two additional offenses (18 U.S.C. 2332f and 2339C) that appear in the listing of 18 U.S.C. 2332b(g)(5)(B), as discussed below. In addition, some citations have been updated or added for conformity to the current versions of the cited statutes, or to ensure consistent coverage of attempts and conspiracies to commit offenses that are otherwise covered. The changes affect specifically the citations relating to provisions of 18 U.S.C. 43, 1512, 1513, and 1594, and also involve substituting citations relating to 40 U.S.C. 5104 and 5109 for former citations relating to 40 U.S.C. 193f and 193h.

Like the interim rule published on June 28, 2001, this final rule sets forth a part 28 of title 28 CFR relating to the DNA identification system. Part 28 contains subparts A and B, which relate respectively to the federal offenses for which DNA samples will be collected, and the responsibilities of BOP and the FBI in collecting, analyzing, and indexing DNA samples:

Subpart A—Qualifying Federal Offenses for Purposes of DNA Sample Collection

Subpart A of the rule specifies qualifying federal offenses for purposes of DNA sample collection. Section 3 of the Act, in part, requires BOP and probation offices to collect DNA samples from individuals in their custody or supervision who are, or have been, convicted of a ''qualifying Federal offense.'' Subsection (d)(1) of section 3 of the Act states that qualifying Federal offenses include those in a specified list, as determined by the Attorney General.

The offense list in subsection (d)(1) was included in the Act as originally enacted and is, for the most part, explicit about which code sections are covered. Subsection (d)(2) of section 3 of the Act identifies additional categories of offenses that are qualifying Federal offenses, as determined by the Attorney General, reflecting the expansion of the range of covered offenses by section 503 of the USA PATRIOT Act.

Section 28.2 in this final rule provides a comprehensive listing of qualifying Federal offenses, reflecting both subsection (d)(1) and subsection (d)(2) of section 3 of the Act. The offenses listed in § 28.2 as revised are generally grouped by title of the United States Code for convenience in readability and application. The derivation of the listing is as follows:

Offenses in the Original Act and Rule

Section 3(d)(1) of the Act (42 U.S.C. 14135a(d)(1)) identifies the qualifying offenses authorized by the original version of the Act. These offenses were specified in the original version of 28 CFR § 28.2 that was adopted by the interim rule published on June 28, 2001. The rationale for the specification of these offenses in the original § 28.2 is explained in the preamble to the interim rule. See 66 FR 34363, 34363–64 (June 28, 2001).

These offenses from the earlier rule are all carried forward in the final version of § 28.2. In some instances, however, offenses in the earlier rule are subsumed in broader references in the final rule that reflect the new categories added by section 503 of the USA PATRIOT Act. *See* 42 U.S.C. 14135a(d)(2). In particular, under the original § 28.2 listing, only voluntary manslaughter under 18 U.S.C. 1112 was covered, reflecting a limitation in the original statute. *See* 42 U.S.C. 14135a(d)(1)(A). In accordance with section 503 of the USA PATRIOT Act, however, the expanded offense categories now include crimes of violence as defined in 18 U.S.C. 16. See 42 U.S.C. 14135a(d)(2)(B). The revised listing in the final version of § 28.2 includes 18 U.S.C. 1112 without qualification, reflecting the Attorney General's determination that involuntary manslaughter constitutes such an offense.

Likewise, the original listing in § 28.2 included a narrower set of offenses under 18 U.S.C. 1153, an Indian country jurisdictional provision, based on limited statutory language. *See* 42 U.S.C. 14135a(d)(1)(F). Specifically, of the offenses identified in 18 U.S.C. 1153, the original listing did not include ''assault with intent to commit murder, assault with a dangerous weapon, assault resulting in serious bodily injury (as defined in section 1365 of this title), an assault against an individual who has not attained the age of 16 years,'' or ''a felony under section 661 of this title.'' 18 U.S.C. 1153. However, the previously excluded assaultive crimes are crimes of violence as defined in 18 U.S.C. 16. The revised listing encompasses a broader range of offenses under 18 U.S.C. 1153, excluding only felonies under section 661 of title 18, which defines nonviolent larceny offenses.

Offenses Listed in 18 U.S.C. 2332b(g)(5)(B)

Section 503 of the USA PATRIOT Act added offenses listed in 18 U.S.C. 2332b(g)(5)(B)—a statutory list of crimes that are often committed by terrorists—as qualifying offenses for purposes of DNA sample collection. The final version of 28 CFR 28.2 incorporates all of these offenses.

In some instances, offenses listed explicitly in 18 U.S.C. 2332b(g)(5)(B) are subsumed in broader references in the final version of 28 CFR 28.2. For example, 18 U.S.C. 2332b(g)(5)(B) includes offenses under section ''844(f)(2) or (3)'' of title 18. Since the offense defined by section 844(f)(1) of title 18 is a crime of violence—and hence includable on the basis of 42 U.S.C. 14135a(d)(2)(B)—the listing in the final version of § 28.2 includes all offenses under 18 U.S.C. 844(f) without qualification.

The offenses listed in the final version of § 28.2 on the basis of 18 U.S.C. 2332b(g)(5)(B) are the same as those listed in the version of § 28.2 in the proposed rule published on March 11, 2003, with two additions: Legislation enacted to implement international counterterrorism conventions created two new offenses in the terrorism chapter of the criminal code, 18 U.S.C. 2332f and 2339C, and added these new offenses to the offense list in 18 U.S.C. 2332b(g)(5)(B). See Public Law 107–197, 116 Stat. 721 (June 25, 2002). The final version of § 28.2 accordingly includes these offenses.

Crimes of Violence

Section 503 of the USA PATRIOT Act also added offenses that are crimes of violence under the definition of 18 U.S.C. 16. According to that provision, a crime of violence is ''(a) an offense that has as an element the use, attempted use, or threatened use of physical force against the person or property of another, or (b) any other offense that is a felony and that, by its nature, involves a substantial risk that physical force against the person or property of another may be used in the course of committing the offense.''

Some offenses that satisfy this definition are independently covered by the original offense categories in 42 U.S.C. 14135a(d)(1) or the listing of offenses in 18 U.S.C. 2332b(g)(5)(B). However, there are a large number of Federal crimes that satisfy this definition and are not otherwise included in the offense categories in the DNA sample collection statute. The final version of § 28.2 includes an extensive listing of such provisions.

Many crimes of violence are defined or referenced in discrete sections, subsections, or paragraphs of the United States Code. The listing in proposed § 28.2 identifies such offenses by referring to the appropriate sections, subsections, or paragraphs.

In some instances, however, sections of the United States Code effectively define a number of offenses—some violent and some nonviolent under the definition of 18 U.S.C. 16—without structural subdivisions that can readily be referenced in identifying the violent offenses. For such provisions, the listing in the final version of § 28.2 identifies the covered crimes of violence by including appropriate phrases that specify the relevant limitations.

For example, 18 U.S.C. 241 generally prohibits conspiracies to violate federally protected rights. The basic offense under the section is punishable by imprisonment for up to 10 years. The section also includes aggravated offenses, punishable by imprisonment for any term of years or for life, for cases in which ''death results'' or that involve ''kidnapping or an attempt to kidnap, aggravated sexual abuse or an attempt to commit aggravated sexual abuse, or an attempt to kill.'' The aggravated offenses under 18 U.S.C. 241 are crimes of violence under the definition of 18 U.S.C. 16. Consequently, the listing in the final version of § 28.2 refers to offenses under section 241 ''involving an offense punishable by imprisonment for any term of years or for life.'' Similarly, the subsequent section of the code, 18 U.S.C. 242, generally prohibits willful deprivations of federally protected rights under color of law, and the basic offense it defines is graded as a misdemeanor. The section also includes aggravated offenses, punishable at the felony level, that constitute crimes of violence. The listing in the final version of § 28.2 accordingly covers offenses under section 242 ''if a felony.''

Other types of qualifying phrases are also used, as appropriate, in relation to sections that set forth alternative

grounds of liability that effectively define both violent and nonviolent offenses under 18 U.S.C. 16. For example, 18 U.S.C. 874 prohibits securing kickbacks from public works employees ''by force [or] intimidation,'' or alternatively by ''threat of procuring dismissal from employment, or by any other manner whatsoever.'' The listing in proposed § 28.2 accordingly refers to offenses under section 874 ''involving force or intimidation.''

In addition to crimes of violence that are currently included in the United States Code, the listing in the final rule includes two sections defining offenses involving rape or sexual abuse of children that have been repealed, 18 U.S.C. 2031 and 2032. Notwithstanding the repeal of these provisions, offenders who were convicted under them may currently be in custody or under supervision. The inclusion of these sections in the rule ensures that DNA samples will be collected from these offenders.

Attempts and Conspiracies

The Act provides that any attempt or conspiracy to commit a qualifying Federal offense is a qualifying Federal offense for the purpose of DNA sample collection. *See* 42 U.S.C. 14135a(d)(1)(G) and (2)(C). In part, this is implemented through the inclusion in § 28.2(a)–(h) of various specific provisions that encompass liability for attempts or conspiracies. However, there are also cross-cutting attempt and conspiracy provisions in the United States Code, including 18 U.S.C. 371 and 844(n) and 21 U.S.C. 846, which apply to categories of offenses that include both offenses that are qualifying Federal offenses for DNA sample collection purposes and offenses that are not. Paragraph (i) in § 28.2 makes it clear that any attempt or conspiracy under these provisions is a qualifying Federal offense, if the object of the attempt or conspiracy includes an offense that is a qualifying Federal offense.

In addition to enlarging the offense listing in § 28.2 to reflect the USA PATRIOT Act amendment, the final rule makes a conforming change in § 28.1. Section 28.1 of the original rule stated in part that section 3(d) of the Act ''states that the offenses that shall be treated as qualifying Federal offenses are offenses under title 18, United States Code, contained in a list of descriptive terms and code sections, as determined by the Attorney General.'' This statement is no longer accurate in light of the USA PATRIOT Act's addition of a second offense list in section 3(d)(2) of the Act (42 U.S.C. 14135a(d)(2)) that covers many offenses outside of title 18. The final rule accordingly revises this sentence in § 28.1.

Subpart B—DNA Sample Collection, Analysis, and Indexing

Section 28.11 in the rule provides definitions for ''DNA sample'' and ''DNA analysis'' that are taken verbatim from section 3(c) of the Act.

Section 28.12, in paragraph (a), directs BOP to collect a DNA sample from each individual in its custody who is, or has been, convicted of a qualifying Federal offense, a qualifying military offense, or a qualifying District of Columbia offense. The requirement that BOP collect DNA samples from individuals convicted of qualifying Federal offenses and qualifying military offenses appears in section 3(a)(1) of the Act. The requirement to collect samples from individuals convicted of qualifying District of Columbia offenses appears in section 4, rather than section 3, of the Act (specifically, section 4(a)(1)). It is included in this regulation for logical completeness in describing BOP's DNA sample collection responsibilities under the Act.

Section 28.12, in paragraph (b), qualifies paragraph (a)'s requirement by affording BOP discretion about taking a DNA sample from an individual who is already in CODIS, or from whom a DNA sample has been collected pursuant to the provisions for collection of DNA samples from military offenders by the Department of Defense. This discretionary authority, which BOP could utilize to avoid duplicative sample collection, tracks sections 3(a)(3) and 4(a)(3) of the Act.

Section 28.12, in paragraph (c), provides in part that individuals described in paragraph (a) shall cooperate in the collection of DNA samples by BOP. This obligation on inmates is correlative to BOP's legal duty to collect DNA samples from them, and arises directly from sections 3(a)(5) and 4(a)(5) of the Act, which prescribe criminal penalties for individuals who fail to cooperate in DNA sample collection authorized by the Act.

Section 28.12, in paragraph (c), further provides that BOP may use or authorize the use of such means as are reasonably necessary to detain, restrain, and collect a DNA sample from an individual described in paragraph (a) who refuses to cooperate in the collection of the sample. This is taken directly from sections 3(a)(4) and 4(a)(4) of the Act. While inmates will normally cooperate voluntarily in DNA sample collection, or be persuaded to do so by the prospect of disciplinary action if they refuse to cooperate, taking a sample involuntarily from a recalcitrant individual may occasionally be necessary. The involuntary taking of a blood sample may in some instances be required under existing procedures for other purposes, such as medical evaluation, see 28 CFR 549.13, or compliance with a court order to take such a sample for evidentiary purposes. Existing regulations regarding the use of force where necessary to enforce institutional regulations or for other purposes will continue to apply in relation to inmates who refuse to cooperate in the collection of a DNA sample. *See* 28 CFR part 552, Subpart C.

Section 28.12, in paragraph (d)—tracking sections 3(a)(4)(B) and 4(a)(4)(B) of the Act—states that BOP may enter into agreements with units of State or local government or with private entities to provide for the collection of DNA samples. This provision makes it clear, for example, that BOP can arrange to have DNA samples collected from inmates in contract facilities by contract facility personnel.

Section 28.12, in paragraph (e), directs BOP to furnish each DNA sample to the FBI (for purposes of analysis and indexing in CODIS). This is explicitly required by sections 3(b) and 4(b) of the Act.

Section 28.13 directs the FBI to carry out a DNA analysis on each DNA sample furnished to it pursuant to section 3(b) or 4(b) of the Act, and to include the results in CODIS. The cited statutory provisions explicitly require the FBI to carry out these functions. Section 28.13 further provides that the FBI must include in CODIS the results of analyses furnished by the Department of Defense, which is required by 10 U.S.C. 1565(b)(2). The FBI is not required to analyze the samples collected by the Department of Defense, because the Department of Defense is responsible for carrying out that function, as provided in 10 U.S.C. 1565(b)(1).

Regulatory Flexibility Act

The Attorney General, in accordance with the Regulatory Flexibility Act (5 U.S.C. 605(b)), has reviewed this regulation and by approving it certifies that this regulation will not have a significant economic impact on a substantial number of small entities for the following reasons: The regulation concerns the collection, analysis, and indexing by Federal agencies of DNA samples from certain offenders.

Executive Order 12866

This regulation has been drafted and reviewed in accordance with Executive Order 12866, ''Regulatory Planning and Review,'' section 1(b), Principles of Regulation. The Department of Justice has determined that this rule is a ''significant regulatory action'' under Executive Order 12866, section 3(f), and accordingly this rule has been reviewed by the Office of Management and Budget.

Executive Order 13132

This regulation will not have substantial direct effects on the States, on the relationship between the National government and the States, or on the distribution of power and responsibilities among the various levels of government. Therefore, in accordance with Executive Order 13132, it is determined that this rule does not have sufficient federalism implications to warrant the preparation of a Federalism Assessment.

Executive Order 12988—Civil Justice Reform

This regulation meets the applicable standards set forth in sections 3(a) and 3(b)(2) of Executive Order 12988.

Unfunded Mandates Reform Act of 1995

This rule will not result in the expenditure by State, local and tribal governments, in the aggregate, or by the private sector, of $100 million or more in any one year, and it will not significantly or uniquely affect small governments. Therefore, no actions were deemed necessary under the provisions of the Unfunded Mandates Reform Act of 1995.

Small Business Regulatory Enforcement Fairness Act of 1996

This rule is not a major rule as defined by section 251 of the Small Business Regulatory Enforcement Fairness Act of 1996. 5 U.S.C. 804. This rule will not result in an annual effect on the economy of $100 million or more; a major increase in costs or prices; or significant adverse effects on competition, employment, investment, productivity, or innovation, or on the ability of United States-based companies to compete with foreign-based companies in domestic and export markets.

List of Subjects in 28 CFR Part 28

Crime, Information, Law enforcement, Prisons, Prisoners, Records, Probation and parole.

■ For the reasons stated in the preamble, the Department of Justice revises 28 CFR Chapter I part 28 to read as follows:

PART 28—DNA IDENTIFICATION SYSTEM

Subpart A—Qualifying Federal Offenses for Purposes of DNA Sample Collection

Sec.
28.1 Purpose.
28.2 Determination of offenses.

Subpart B—DNA Sample Collection, Analysis, and Indexing

28.11 Definitions.
28.12 Collection of DNA samples.
28.13 Analysis and indexing of DNA samples.

Authority: 28 U.S.C. 509, 510; 42 U.S.C. 14132, 14135a, 14135b; 10 U.S.C. 1565; Pub. L. 106–546, 114 Stat. 2726; Pub. L. 107–56, 115 Stat. 272.

Subpart A—Qualifying Federal Offenses for Purposes of DNA Sample Collection

§ 28.1 Purpose.

Section 3 of Public Law 106–546 directs the collection, analysis, and indexing of a DNA sample from each individual in the custody of the Bureau of Prisons or under the supervision of a probation office who is, or has been, convicted of a qualifying Federal offense. Subsection (d) of that section states that the offenses that shall be treated as qualifying Federal offenses are offenses in certain listed code sections or categories, as determined by the Attorney General.

§ 28.2 Determination of offenses.

The following offenses shall be treated for purposes of section 3 of Public Law 106–546 as qualifying Federal offenses:

(a) Any offense under any of the following sections of title 18, United States Code: 32, 33, 34, 36, 37, 43(b)(3)–(4), 81, 111, 112(a), 112(b) involving intimidation or threat, 113, 114, 115, 116, 175, 175b, 229, 231, 241 involving an offense punishable by imprisonment for any term of years or for life, 242 if a felony, 245, 247, 248 unless the offense involves only a nonviolent physical obstruction, 351, 372, 373, 593 involving force, threat, or intimidation, 594, 610 involving intimidation or threat, 751 if a felony, 752 if a felony, 753, 757, 758, 831, 842(d), (i), (m), (n), or (p), 844(d), (e), (f), (h), (i), (m), or (o), 871, 874 involving force or intimidation, 875 unless involving only a threat to injure reputation or to accuse a person of a crime, 876 unless involving only a threat to injure reputation or to accuse a person of a crime, 877 unless involving only a threat to injure reputation or to accuse a person of a crime, 878, 879, 892, 894, 922(a)(4), (7), or (8), 922(b)(4), 922(b)(5) involving sale or delivery of armor-piercing ammunition, 922(d), (g), (o), or (p), 924(c), (h), (j), (k), or (o), 929, 930(b) or (c), 956, 970(a), 1030(a)(1), 1030(a)(5)(A)(i) resulting in damage as defined in 1030(a)(5)(B)(ii) through (v), 1091, 1111, 1112, 1113, 1114, 1116, 1117, 1118, 1119, 1120, 1121, 1153 unless involving only a felony under section 661, 1201, 1203, 1204, 1361, 1362, 1363, 1364, 1365(a), (d), or (e), 1366, 1368, 1470, the second paragraph of 1501, 1503 involving threat or force, 1505 involving threat or force, 1509, 1512(a) , 1513(a) or (b), the final subsection of 1513 involving a conspiracy to violate 1513(a) or (b), 1581, 1582, 1583, 1584, 1585, 1586, 1587, 1588, 1589, 1590, 1591, 1592, 1594(a), 1651, 1652, 1653, 1655, 1659, 1661, 1751, 1791 involving a weapon, 1792, 1859, 1864 if a felony, 1951, 1952(a)(2), 1958, 1959, 1962 (b) or (c) involving a pattern of racketeering activity that includes any act or threat of murder, kidnapping, arson, robbery, or extortion or any act that otherwise constitutes a crime of violence under this rule, 1991, 1992, 1993, 2031 notwithstanding the repeal of that provision, 2032 notwithstanding the repeal of that provision, 2101, 2111, 2112, 2113, 2114, 2115, 2116, 2117, 2118, 2119, 2152 involving injury or destruction of property described in that section, 2153 involving injury or destruction of property described in that section or an attempt or conspiracy to do so, 2155, 2191, 2192, 2193, 2194 involving force or threat, 2231, 2232(a) or (b), 2233, 2241, 2242, 2243, 2244, 2245, 2251, 2251A, 2252, 2252A, 2260(a), 2260(c) involving a conspiracy or attempt to violate 2260(a), 2261, 2261A, 2262, 2272, 2273, 2274, 2275, 2276, 2280, 2281, 2332, 2332a, 2332b, 2332f, 2339, 2339A, 2339B, 2339C, 2340A, 2381 involving levying war against the United States, 2383, 2384, 2385, 2389, 2390, 2421, 2422, 2423, 2425, or 2441(c)(4).

(b) Any offense under any of the following sections of title 8, United States Code: 1324(a)(1)(B)(iv) or 1328.

(c) Any offense under any of the following sections of title 16, United States Code: 773g if the offense is a felony or involves a violation of 773e(a)(3), 1859 if the offense is a felony or involves a violation of 1857(1)(E), 2438 involving a violation of 2435(4), (5), or (6), 3637(c) if the offense is a felony or involves a violation of 3637(a)(3), or 5010(b) if the offense is a felony or involves a violation of 5009(6).

(d) Any offense under any of the following sections of title 21, United States Code: 461(c), 675, 841(d), 848(e), 858, or 1041(b).

(e) Any offense under any of the following sections of title 26, United States Code: 5861, 7212(a) involving force or threat, or 7212(b).

(f) Any offense under any of the following sections of title 42, United States Code: 1973gg–10(1), 2000e–13, 2283, 2284, 3631, or 9152(d) if the offense is a felony or involves a violation of 9151(3).

(g) Any offense under any of the following sections of title 49, United States Code: 46502, 46503, 46504, 46505, 46506(1) unless involving only an act that would violate section 661 or 662 of title 18 if committed in the special maritime and territorial jurisdiction of the United States, 46507 involving false information or a threat relating to the foregoing offenses, 60123(b), or 80501.

(h) Any offense under any of the following sections of the United States Code: section 2146(b) of title 7, section 1463 of title 30 if the offense is a felony or involves a violation of section 1461(4) of that title, section 1232(b)(2) of title 33, section 5104(e)(1) or (2)(F) of title 40 or section 5109 of that title involving a violation or attempted violation of section 5104(e)(1) or (2)(F), section 1063 of title 43 involving force, threat, or intimidation, or section 606(b) of title 47.

(i) Any offense that is an attempt or conspiracy to commit any of the foregoing offenses, including any such attempt or conspiracy under section 371 of title 18, section 844(n) of title 18, or section 846 of title 21 of the United States Code.

Subpart B—DNA Sample Collection, Analysis, and Indexing

§ 28.11 Definitions.

DNA analysis means analysis of the deoxyribonucleic acid (DNA) identification information in a bodily sample.

DNA sample means a tissue, fluid, or other bodily sample of an individual on which a DNA analysis can be carried out.

§ 28.12 Collection of DNA samples.

(a) The Bureau of Prisons shall collect a DNA sample from each individual in the custody of the Bureau of Prisons who is, or has been, convicted of—

(1) A qualifying Federal offense as described in § 28.2;

(2) A qualifying military offense, as determined under 10 U.S.C. 1565; or

(3) A qualifying District of Columbia offense, as determined under section 4(d) of Public Law 106–546.

(b) Notwithstanding paragraph (a) of this section, the Bureau of Prisons may, but need not, collect a DNA sample from an individual described in paragraph (a) of this section if the Combined DNA Index System contains a DNA analysis with respect to that individual, or if a DNA sample has been collected from that individual under 10 U.S.C. 1565.

(c) Each individual described in paragraph (a) of this section shall cooperate in the collection of a DNA sample from that individual by the Bureau of Prisons. The Bureau of Prisons may use or authorize the use of such means as are reasonably necessary to detain, restrain, and collect a DNA sample from an individual described in paragraph (a) of this section who refuses to cooperate in the collection of the sample.

(d) The Bureau of Prisons may enter into agreements with units of State or local government or with private entities to provide for the collection of samples under this section.

(e) The Bureau of Prisons shall furnish each DNA sample collected under this section to the Federal Bureau of Investigation.

§ 28.13 Analysis and indexing of DNA samples.

(a) The Federal Bureau of Investigation shall carry out a DNA analysis on each DNA sample furnished to the Federal Bureau of Investigation pursuant to section 3(b) or 4(b) of Public Law 106–54, and shall include the results in the Combined DNA Index System.

(b) The Federal Bureau of Investigation shall include in the Combined DNA Index System the results of each analysis furnished to the Federal Bureau of Investigation pursuant to 10 U.S.C. 1565(b)(2).

Dated: December 16, 2003.

John Ashcroft,

Attorney General.

[FR Doc. 03–31889 Filed 12–24–03; 8:45 am]

BILLING CODE 4410–19–P

DEPARTMENT OF JUSTICE

Bureau of Prisons

28 CFR Part 548

[BOP–1105–F]

RIN 1120–AB04

Religious Beliefs and Practices: Nomenclature Change

AGENCY: Bureau of Prisons, Justice.

ACTION: Final rule.

SUMMARY: The Bureau amends its regulations on religious beliefs and practices to rename the special diet with which it accommodates inmates' religious dietary practices. The special diet, formerly known as the common fare menu, will now be called the religious diet menu. This change in name is necessary in order to reflect more equitably the variety of faith groups with religious dietary needs.

EFFECTIVE DATE: December 29, 2003.

ADDRESSES: Rules Unit, Office of General Counsel, Bureau of Prisons, HOLC Room 754, 320 First Street, NW., Washington, DC 20534.

FOR FURTHER INFORMATION CONTACT: Sarah Qureshi, Office of General Counsel, Bureau of Prisons, phone (202) 307–2105.

SUPPLEMENTARY INFORMATION: The Bureau of Prisons (Bureau) amends its regulations on religious beliefs and practices (28 CFR part 548). We published a final rule on this subject in the **Federal Register** on September 6, 1995 (60 FR 46486) and amended it on August 22, 1997 (62 FR 44836).

What Change Is the Bureau Making?

The Bureau's regulations on religious dietary practices (§ 548.20) note that inmate requests to observe religious dietary practices are addressed through a common fare menu or program. The Bureau renames the ''common fare menu or program'' as ''the religious diet menu or program''.

Why Is the Bureau Making This Change?

The common fare menu originated in 1983 as a pilot program designed to meet the needs of Jewish and Muslim inmates. The menu used food acceptable (or ''common'') to both religious groups to meet nutritional standards. The number of religious groups within the inmate population has increased during the last few years. The increase in the number of religious groups has also increased the variety in religious dietary needs.

In equitably addressing the varied needs of the inmate population, we believe that it is more accurate to say that we offer a religious diet program rather than a program which emphasizes the commonality of a menu for two of the faith groups.

From a more technical point of view, the change in nomenclature will result in the more consistent use in the regulations of the phrases ''religious diet menu'' and ''religious diet program''.

Who Does This Change Affect?

While the regulations apply to Federal inmates housed in Bureau facilities, no one is materially affected because the rule merely changes the name of a program.

Because the change is merely a nomenclature change, we find good cause for exempting the provisions of the Administrative Procedure Act (5 U.S.C. 553) requiring notice of proposed rulemaking, the opportunity for public comment, and delay in effective date. If you would like to comment, you may submit comments on this rule by writing to the previously cited address. We will consider these comments but will not respond to them in the **Federal Register**.

Executive Order 12866

This regulation has been drafted and reviewed in accordance with Executive Order 12866, ''Regulatory Planning and Review'', section 1(b), Principles of Regulation. The Department of Justice has determined that this rule is not a ''significant regulatory action'' under Executive Order 12866, section 3(f), and accordingly this rule has not been reviewed by the Office of Management and Budget.

Executive Order 13132

This regulation will not have substantial direct effects on the States, on the relationship between the National government and the States, or on distribution of power and responsibilities among the various levels of government. Therefore, in accordance with Executive Order 13132, it is determined that this rule does not have sufficient federalism implications to warrant the preparation of a Federalism Assessment.

Regulatory Flexibility Act

The Director of the Bureau of Prisons, in accordance with the Regulatory Flexibility Act (5 U.S.C. 605(b)), has reviewed this regulation and by approving it certifies that this regulation will not have a significant economic impact upon a substantial number of small entities for the following reasons: This rule pertains to the correctional management of offenders committed to the custody of the Attorney General or the Director of the Bureau of Prisons, and its economic impact is limited to the Bureau's appropriated funds.

Unfunded Mandates Reform Act of 1995

This rule will not result in the expenditure by State, local and tribal governments, in the aggregate, or by the private sector, of $100,000,000 or more in any one year, and it will not significantly or uniquely affect small governments. Therefore, no actions were deemed necessary under the provisions of the Unfunded Mandates Reform Act of 1995.

Small Business Regulatory Enforcement Fairness Act of 1996

This rule is not a major rule as defined by § 804 of the Small Business Regulatory Enforcement Fairness Act of 1996. This rule will not result in an annual effect on the economy of $100,000,000 or more; a major increase in costs or prices; or significant adverse effects on competition, employment, investment, productivity, innovation, or on the ability of United States-based companies to compete with foreign-based companies in domestic and export markets.

List of Subjects in 28 CFR Part 548

Prisoners.

Harley G. Lappin,
Director, Bureau of Prisons.

■ Under the rulemaking authority vested in the Attorney General in 5 U.S.C. 552(a) and delegated to the Director, Bureau of Prisons, we amend part 548 in subchapter C of 28 CFR, chapter V as follows.

SUBCHAPTER C—INSTITUTIONAL MANAGEMENT

PART 548—RELIGIOUS PROGRAMS

■ 1. The authority citation for 28 CFR part 548 continues to read as follows:

Authority: 5 U.S.C. 301; 18 U.S.C. 3621, 3622, 3624, 4001, 4042, 4081, 4082 (Repealed in part as to offenses committed on or after November 1, 1987), 5006–5024 (Repealed October 12, 1984 as to offenses committed after that date), 5039; 28 U.S.C. 509, 510; 42 U.S.C. 1996; 28 CFR 0.95–0.99.

§ 548.20 [Amended]

■ 2. Revise the phrase ''common fare'' in the first and second sentences of paragraph (a) and in the first sentence of paragraph (b) to read ''religious diet''.

[FR Doc. 03–31703 Filed 12–24–03; 8:45 am]

BILLING CODE 4410–05–P

DEPARTMENT OF DEFENSE

Office of the Secretary

32 CFR Parts, 341, 342, 348, 350, 353, 363, 364, 365, 366, 367A, 368, 369, 370, 373, 376, 377, 380, 381, 382, 384, 385, 386, 387, 391, 394, 396, and 399

Removal of Parts

AGENCY: Department of Defense.

ACTION: Final rule.

SUMMARY: The Department of Defense is removing various parts (organizational charters) from chapter I, Office of the Secretary of Defense. This administrative action removes obsolete information from the Code of Federal Regulations and notifies readers of the availability of the current version of the DoD documents.

DATES: This rule is effective December 29, 2003.

FOR FURTHER INFORMATION CONTACT: L. Bynum or P. Toppings, (703) 601–4722

SUPPLEMENTARY INFORMATION: The chart below identifies the parts being removed. All documents listed are DoD Directives which may be found at the Washington Headquarters Services website at *http://www.dtic.mil/whs/directives/corres/html/ai7.htm.*

Part No.	DoD Directive	Status
341	5105.2	Current.
342	5124.4	Canceled by DoD Directive 5100.89.
348	5136.11	Canceled by DoD Directive 5136.12.
350	5137.1	Current.
353	5142.1	Current.
363	5105.38	Canceled by DoD Directive 5105.65.
364	5110.4	Current.
365	3030.1	Current.

Part No.	DoD Directive	Status
366	5141.1	Current.
367a	5105.45	Current.
368	5100.1	Current.
369	5134.6	Canceled by DoD Directive 5134.12.
370		No document available.
373	5106.1	Current.
376	5100.81	Completely canceled 9/30/2003.
377	5105.41	Current.
380	5141.2	Current.
381	5105.31	Canceled by DoD Directive 5105.62.
382	5134.1	Current.
384	5134.1	Current.
385	5105.21	Current.
386	5105.56	Canceled by DoD Directive 5105.60.
387	5105.36	Current.
391	5105.53	Current.
394	5145.1	Current.
396		No document available.
399	5105.40	Canceled by DoD Directive 5105.60.

List of Subjects in 32 CFR Parts 341, 342, 348, 350, 353, 363, 364, 365, 366, 367A, 368, 369, 370, 373, 376, 377, 380, 381, 382, 384, 385, 386, 387, 391, 394, 396, and 399

Organization and functions (Government agencies).

PARTS 341, 342, 348, 350, 353, 363, 364, 365, 366, 367A, 368, 369, 370, 373, 376, 377, 380, 381, 382, 384, 385, 386, 387, 391, 394, 396, and 399—[REMOVED]

■ Accordingly, by the authority of 10 U.S.C. 301, 32 CFR Parts 341, 342, 348, 350, 353, 363, 364, 365, 366, 367A, 368, 369, 370, 373, 376, 377, 380, 381, 382, 384, 385, 386, 387, 391, 394, 396, and 399 are removed.

Dated: December 19, 2003.

L.M. Bynum,

Alternate OSD Federal Register Liaison Officer, Department of Defense.

[FR Doc. 03–31792 Filed 12–24–03; 8:45 am]

BILLING CODE 5001–06–M

DEPARTMENT OF HOMELAND SECURITY

Coast Guard

33 CFR Part 165

[COTP Morgan City–03–011]

RIN 1625–AA00

Safety Zone; Gulf Intracoastal Waterway, Mile 134 West of the Harvey Locks, Louisa, LA

AGENCY: Coast Guard, DHS.

ACTION: Temporary final rule.

SUMMARY: The Coast Guard is establishing a temporary safety zone 100 feet east and west of the Louisa Bridge on the Gulf Intracoastal Waterway (GIWW), mile 134 West of the Harvey Locks (WHL), extending the entire width of the waterway. This safety zone is needed to protect persons and vessels from the potential safety hazards associated with erecting the north bascule leaf tow section of the new Louisa Bridge. Entry into this zone is prohibited unless specifically authorized by the Captain of the Port Morgan City, or a designated representative.

DATES: This rule is effective from 7 a.m. CDT on January 19, 2004, until 5 p.m. CDT on January 23, 2004.

ADDRESSES: Documents indicated in this preamble as being available in the docket are part of docket [COTP Morgan City–03–011] and are available for inspection or copying at Marine Safety Office Morgan City, 800 David Drive, Morgan City, Louisiana 70380, between 8 a.m. CDT and 4 p.m. CDT, Monday through Friday, except Federal holidays.

FOR FURTHER INFORMATION CONTACT: LT (Lieutenant) Norm Witt, Marine Safety Office Morgan City, at (985) 380–5320.

SUPPLEMENTARY INFORMATION:

Regulatory Information

We did not publish a notice of proposed rulemaking (NPRM) for this regulation. Under 5 U.S.C. 553(b)(B), the Coast Guard finds that good cause exists for not publishing an NPRM, and under 5 U.S.C. 553(d)(3), good cause exists for making this rule effective less than 30 days after publication in the **Federal Register**. Publishing an NPRM and delaying this rule's effective date would be contrary to public interest since immediate action is needed to protect vessels and mariners from the hazards associated with the construction of the new bridge.

Background and Purpose

The Louisiana Department of Transportation and Development will be erecting the north bascule leaf tow section of the new Louisa Bridge. The bridge will be in the closed-to-navigation position during that time. Vessel traffic must remain 100 feet east or west of the bridge from 7 a.m. to 5 p.m. each day, from January 19–23, 2004, to avoid potential hazards while construction is being conducted. Entry into this zone is prohibited to all vessels unless authorized by the Captain of the Port Morgan City, or a designated representative.

Discussion of Rule

The Coast Guard is establishing a temporary safety zone 100 feet east and west of the Louisa Bridge on the Gulf Intracoastal Waterway (GIWW), mile 134 West of the Harvey Locks (WHL), extending the entire width of the waterway. Entry into this zone is prohibited unless specifically authorized by the Captain of the Port Morgan City, or a designated representative.

This rule is effective from 7 a.m. CDT on January 19, 2004, until 5 p.m. CDT on January 23, 2004. This rule will only be enforced from 7 a.m. until 5 p.m. CDT each day that it is effective. During non-enforcement hours, all traffic will be allowed to transit through the zone. Vessels desiring to transit through the zone during enforcement hours must request permission to do so from the Captain of the Port Morgan City, or a designated representative. The Captain of the Port Morgan City will inform the public via broadcast notice to mariners

of the enforcement periods for the safety zone.

Regulatory Evaluation

This rule is not a ''significant regulatory action'' under section 3(f) of Executive Order 12866, Regulatory Planning and Review, and does not require an assessment of potential costs and benefits under section 6(a)(3) of that Order. The Office of Management and Budget has not reviewed it under that Order. It is not ''significant'' under the regulatory policies and procedures of the Department of Homeland Security (DHS).

This rule will only be in effect for a short period of time and notifications to the marine community will be made through broadcast notice to mariners. The impacts on routine navigation are expected to be minimal. Although this rule is effective for a period of five days, it will only be enforced for a period of ten hours each day. Vessels desiring to transit through the zone during enforcement hours must request permission to do so from the Captain of the Port Morgan City, or a designated representative. During non-enforcement hours, all traffic will be allowed to transit through the zone.

Small Entities

Under the Regulatory Flexibility Act (5 U.S.C. 601–612), we have considered whether this rule would have a significant economic impact on a substantial number of small entities. The term ''small entities'' comprises small businesses, not-for-profit organizations that are independently owned and operated and are not dominant in their fields, and governmental jurisdictions with populations of less than 50,000.

The Coast Guard certifies under 5 U.S.C. 605 (b) that this rule will not have a significant economic impact on a substantial number of small entities. This rule will affect the following entities, some of which may be small entities: The owners or operators of vessels intending to transit through within 100 feet east or west of the Louisa Bridge, located on the GIWW at mile 134 WHL, from 7 a.m. CDT on January 19, 2004 until 5 p.m. CDT on January 23, 2004. This safety zone will not have a significant economic impact on a substantial number of small entities because this rule will be in effect for only five days, and will only be enforced for a period of 10 hours each day. During non-enforcement hours, all traffic will be allowed to transit through the zone.

If you are a small business entity and are significantly affected by this regulation, please contact LT Norm Witt, Marine Safety Office Morgan City, at (985) 380–5320.

Assistance for Small Entities

Under section 213(a) of the Small Business Regulatory Enforcement Fairness Act of 1996 (Pub. L. 104–121), we offered to assist small entities in understanding the rule so they could better evaluate its effects on them and participate in the rulemaking process.

Small businesses may send comments on the actions of Federal employees who enforce, or otherwise determine compliance with, Federal regulations to the Small Business and Agriculture Regulatory Enforcement Ombudsman and the Regional Small Business Regulatory Fairness Boards. The Ombudsman evaluates these actions annually and rates each agency's responsiveness to small business. If you wish to comment on actions by employees of the Coast Guard, call 1–888–REG–FAIR (1–888–734–3247).

Collection of Information

This rule calls for no new collection of information under the Paperwork Reduction Act of 1995 (44 U.S.C. 3501–3520).

Federalism

A rule has implications for federalism under Executive Order 13132, Federalism, if it has a substantial direct effect on State or local governments and would either preempt State law or impose a substantial direct cost of compliance on them. We have analyzed this rule under that Order and have determined that it does not have implications for federalism.

Unfunded Mandates Reform Act

The Unfunded Mandates Reform Act of 1995 (2 U.S.C. 1531–1538) requires Federal agencies to assess the effects of their discretionary regulatory actions. In particular, the Act addresses actions that may result in the expenditure by a State, local, or tribal government, in the aggregate, or by the private sector of $100,000,000 or more in any one year. Though this rule will not result in such an expenditure, we do discuss the effects of this rule elsewhere in this preamble.

Taking of Private Property

This rule will not effect a taking of private property or otherwise have taking implications under Executive Order 12630, Governmental Actions and Interference with Constitutionally Protected Property Rights.

Civil Justice Reform

This rule meets applicable standards in sections 3(a) and 3(b)(2) of Executive Order 12988, Civil Justice Reform, to minimize litigation, eliminate ambiguity, and reduce burden.

Protection of Children

We have analyzed this rule under Executive Order 13045, Protection of Children From Environmental Health Risks and Safety Risks. This rule is not an economically significant rule and does not create an environmental risk to health or risk to safety that may disproportionately affect children.

Indian Tribal Governments

This rule does not have tribal implications under Executive Order 13175, Consultation and Coordination with Indian Tribal Governments, because it does not have a substantial direct effect on one or more Indian tribes, on the relationship between the Federal Government and Indian tribes, or on the distribution of power and responsibilities between the Federal Government and Indian tribes.

Energy Effects

We have analyzed this rule under Executive Order 13211, Actions Concerning Regulations That Significantly Affect Energy Supply, Distribution, or Use. We have determined that it is not a ''significant energy action'' under that Order because it is not a ''significant regulatory action'' under Executive Order 12866 and is not likely to have a significant adverse effect on the supply, distribution, or use of energy. The Administrator of the Office of Information and Regulatory Affairs has not designated it as significant energy action. Therefore, it does not require a Statement of Energy Effects under Executive Order 13211.

Environment

We have analyzed this rule under Commandant Instruction M16475.1D, which guides the Coast Guard in complying with the National Environmental Policy Act of 1969 (NEPA) (42 U.S.C. 4321–4370f), and have concluded that there are no factors in this case that would limit the use of a categorical exclusion under section 2.B.2 of the Instruction. Therefore, this rule is categorically excluded, under figure 2–1, paragraph (34)(g), of the Instruction, from further environmental documentation because this rule is not expected to result in any significant adverse environmental impact as described in NEPA.

Under figure 2–1, paragraph (34)(g), of the Instruction, an ''Environmental

Analysis Check List'' and a ''Categorical Exclusion Determination'' are not required for this rule.

List of Subjects in 33 CFR Part 165

Harbors, Marine safety, Navigation (Water), Reporting and recordkeeping requirements, Security measures, Waterways.

■ For the reasons discussed in the preamble, the Coast Guard amends 33 CFR part 165 as follows:

PART 165—REGULATED NAVIGATION AREAS AND LIMITED ACCESS AREAS

■ 1. The authority citation for part 165 continues to read as follows:

Authority: 33 U.S.C. 1226, 1231; 46 U.S.C. Chapter 701; 50 U.S.C. 191, 195; 33 CFR 1.05–1(g), 6.04–1, 6.04–6, and 160.5; Pub. L. 107–295, 116 Stat. 2064; Department of Homeland Security Delegation No. 0170.1.

■ 2. Add temporary § 165.T08–153 to read as follows: § 165.T08–153 Safety Zone; 100 Feet East and West of the Louisa Bridge, Gulf Intracoastal Waterway, Mile 134 West of the Harvey Locks, Louisa, LA.

(a) *Location.* The following area is a temporary safety zone: all waters within 100 feet east and west of the Louisa Bridge located on the Gulf Intracoastal Waterway at mile 134 West of the Harvey Locks, Louisa, Louisiana.

(b) *Effective Date.* This rule is effective from 7 a.m. CDT on January 19, 2004, until 5 p.m. CDT on January 23, 2004.

(c) *Periods of Enforcement.* The safety zone in this section will be enforced from 7 a.m. until 5 p.m. CDT each day of the effective period.

(d) *Regulations.* (1) In accordance with the general regulations in § 165.23 of this part, entry into the zone established in this section is prohibited unless authorized by the Captain of the Port Morgan City.

(2) Vessels requiring entry into or passage through the safety zone established in this section must request permission from the Captain of the Port Morgan City, or a designated representative. They may be contacted on VHF Channel 13 or 16, or by telephone at (985) 380–5320.

(3) All persons and vessels shall comply with the instructions of the Captain of the Port Morgan City and designated on-scene U.S. Coast Guard patrol personnel. On-scene U.S. Coast Guard patrol personnel are commissioned, warrant, and petty officers of the U.S. Coast Guard.

Dated: November 17, 2003.

S.P. Garrity,

Captain, U.S. Coast Guard, Captain of the Port Morgan City.

[FR Doc. 03–31893 Filed 12–24–03; 8:45 am]

BILLING CODE 4910–15–P

DEPARTMENT OF HOMELAND SECURITY

Coast Guard

33 CFR Part 165

[COTP San Francisco Bay 03–030]

RIN 1625–AA00

Security Zone; Suisun Bay, Concord, CA

AGENCY: Coast Guard, DHS.

ACTION: Temporary final rule.

SUMMARY: The Coast Guard is establishing a temporary security zone in the navigable waters of the United States adjacent to the Military Ocean Terminal Concord (MOTCO), California (formerly United States Naval Weapons Center Concord, California). In light of recent terrorist actions against the United States, the security zone is necessary to ensure the safe onloading and offloading of military equipment and to ensure the safety of the nearby public from potential subversive acts. The security zone will prohibit all persons and vessels from entering, transiting through or anchoring within a portion of the Suisun Bay surrounding the MOTCO unless authorized by the Captain of the Port (COTP) or his designated representative.

DATES: This rule is effective from 7 a.m. PST on December 21, 2003, to 11:59 p.m. PST on January 3, 2004.

ADDRESSES: Documents indicated in this preamble as being available in the docket are part of docket [COTP San Francisco Bay 03–030] and are available for inspection or copying at Coast Guard Marine Safety Office San Francisco Bay, Coast Guard Island, Alameda, California, 94501, between 9 a.m. and 4 p.m., Monday through Friday, except Federal holidays.

FOR FURTHER INFORMATION CONTACT: Lieutenant Doug Ebbers, U.S. Coast Guard Marine Safety Office San Francisco Bay, at (510) 437–3073.

SUPPLEMENTARY INFORMATION:

Regulatory Information

We did not publish a notice of proposed rulemaking (NPRM) for this regulation. Under 5 U.S.C. 553(b)(B), the Coast Guard finds that good cause exists for not publishing a NPRM. Additionally, under 5 U.S.C. 553(d)(3), the Coast Guard finds that good cause exists for making this rule effective less than 30 days after publication in the **Federal Register** as the schedule and other logistical details were not known until a date fewer than 30 days prior to the start date of the military operation. Publishing a NPRM and delaying this rule's effective date would be contrary to the public interest since the safety and security of the people, ports, waterways, and properties of the Port Chicago and Suisun Bay areas would be jeopardized without the protection afforded by this security zone. Any delay in implementing this rule would be contrary to the public interest since immediate action is necessary to ensure the protection of all cargo vessels, their crews, the public and national security.

Background and Purpose

Since the September 11, 2001 terrorist attacks on the World Trade Center in New York, the Pentagon in Arlington, Virginia and Flight 93, the Federal Bureau of Investigation (FBI) has issued several warnings concerning the potential for additional terrorist attacks within the United States. In addition, the ongoing hostilities in Afghanistan and the conflict in Iraq have made it prudent for U.S. ports to be on a higher state of alert because Al-Qaeda and other organizations have declared an ongoing intention to conduct armed attacks on U.S. interests worldwide.

The threat of maritime attacks is real as evidenced by the attack on the USS *Cole* and the subsequent attack in October 2002 against a tank vessel off the coast of Yemen. These threats manifest a continuing threat to U.S. assets as described in the President's finding in Executive Order 13273 of August 21, 2002 (67 FR 56215, September 3, 2002) that the security of the U.S. is endangered by the September 11, 2001 attacks and that such aggression continues to endanger the international relations of the United States. *See also* Continuation of the National Emergency with Respect to Certain Terrorist Attacks (67 FR 58317, September 13, 2002), and Continuation of the National Emergency with Respect to Persons Who Commit, Threaten To Commit, Or Support Terrorism (67 FR 59447, September 20, 2002). The U.S. Maritime Administration (MARAD) in Advisory 02–07 advised U.S. shipping interests to maintain a heightened status of alert against possible terrorist attacks. MARAD more recently issued Advisory 03–05 informing operators of maritime interests of increased threat possibilities to vessels and facilities and a higher risk of terrorist attack to the transportation

community in the United States. The ongoing foreign hostilities have made it prudent for U.S. ports and waterways to be on a higher state of alert because the Al-Qaeda organization and other similar organizations have declared and ongoing intention to conduct armed attacks on U.S. interests worldwide.

In its effort to thwart terrorist activity, the Coast Guard has increased safety and security measures on U.S. ports and waterways. As part of the Diplomatic Security and Antiterrorism Act of 1986 (Pub. L. 99–399), Congress amended section 7 of the Ports and Waterways Safety Act (PWSA), 33 U.S.C. 1226, to allow the Coast Guard to take actions, including the establishment of security and safety zones, to prevent or respond to acts of terrorism against individuals, vessels, or public or commercial structures. The Coast Guard also has authority to establish security zones pursuant to the Act of June 15, 1917, as amended by the Magnuson Act of August 9, 1950 (50 U.S.C. 191 *et seq.*) and implementing regulations promulgated by the President in subparts 6.01 and 6.04 of part 6 of title 33 of the Code of Federal Regulations.

In this particular rulemaking, to address the aforementioned security concerns, United States Army officials have requested that the Captain of the Port, San Francisco Bay, California, establish a temporary security zone in the navigable waters of the United States surrounding the Military Ocean Terminal Concord (MOTCO), California, to safeguard vessels, cargo and crew engaged in military operations. This temporary security zone is necessary to safeguard the MOTCO terminal and the surrounding property from sabotage or other subversive acts, accidents or criminal acts. This zone is also necessary to protect military operations from compromise and interference and to specifically protect the people, ports, waterways, and properties of the Port Chicago and Suisun Bay areas.

Discussion of Rule

In this temporary rule, the Coast Guard is establishing a fixed security zone around Military Ocean Terminal Concord (MOTCO), California, encompassing the navigable waters, extending from the surface to the sea floor, within a line connecting the following coordinates: latitude 38°03′07″ N and longitude 122°03′00″ W; thence to latitude 38°03′15″ N and longitude 122°03′04″ W; thence to latitude 38°03′30″ N and longitude 122°02′35″ W; thence to latitude 38°03′50″ N and longitude 122°01′15″ W; thence to latitude 38°03′41″ N and longitude 122°00′03″ W; thence to latitude 38°03′18″ N and longitude 121°59′31″ W, and along the shoreline back to the beginning point. The area encompassed by these connecting points includes the Seal Island Channel, all of the Port Chicago Reach section of the deepwater channel, and a small portion of both the Roe Island Channel and Middle Ground West Reach sections of the deepwater channel. Persons and vessels are prohibited from entering, transiting through or anchoring within the security zone unless authorized by the Captain of the Port (COTP) or his designated representative.

Vessels or persons violating this section will be subject to the penalties set forth in 33 U.S.C. 1232 and 50 U.S.C. 192. Pursuant to 33 U.S.C. 1232, any violation of the security zone described herein, is punishable by civil penalties (not to exceed $27,500 per violation, where each day of a continuing violation is a separate violation), criminal penalties (imprisonment up to 6 years and a maximum fine of $250,000), and in rem liability against the offending vessel. Any person who violates this section using a dangerous weapon, or who engages in conduct that causes bodily injury or fear of imminent bodily injury to any officer authorized to enforce this regulation, will also face imprisonment up to 12 years. Vessels or persons violating this section are also subject to the penalties set forth in 50 U.S.C. 192: Seizure and forfeiture of the vessel to the United States, a maximum criminal fine of $10,000, and imprisonment up to 10 years, and a civil penalty of not more than $25,000 for each day of a continuing violation. The Captain of the Port will enforce this zone and may enlist the aid and cooperation of any Federal, State, county, municipal, and private agency to assist in the enforcement of the regulation. This regulation is proposed under the authority of 33 U.S.C. 1226 in addition to the authority contained in 50 U.S.C. 191 and 33 U.S.C. 1231.

Regulatory Evaluation

This rule is not a ''significant regulatory action'' under section 3(f) of Executive Order 12866, Regulatory Planning and Review, and does not require an assessment of potential costs and benefits under section 6(a)(3) of that Order. The Office of Management and Budget has not reviewed it under that Order. It is not ''significant'' under the regulatory policies and procedures of the Department of Homeland Security (DHS).

Although this regulation restricts access to portions of navigable waters, the effect of this regulation will not be significant because the zone will encompass only a small portion of the waterway for a short duration. Vessels and persons may be allowed to enter these zones on a case-by-case basis with permission of the Captain of the Port or his designated representative.

The size of the zone is the minimum necessary to provide adequate protection for MOTCO, vessels engaged in operations at MOTCO, their crews, other vessels operating in the vicinity, and the public. The entities most likely to be affected are commercial vessels transiting to or from Suisun Bay via the Port Chicago Reach section of the channel.

Small Entities

Under the Regulatory Flexibility Act (5 U.S.C. 601–612), we have considered whether this rule would have a significant economic impact on a substantial number of small entities. The term ''small entities'' comprises small businesses, not-for-profit organizations that are independently owned and operated and are not dominant in their fields, and governmental jurisdictions with populations of less than 50,000.

The Coast Guard certifies under 5 U.S.C. 605(b) that this rule will not have a significant economic impact on a substantial number of small entities. This rule will affect the following entities, some of which may be small entities: the owners and operators of vessels intending to anchor or transit to or from Suisun Bay via the Port Chicago Reach section of the channel. Although the security zone will occupy a section of the navigable channel (Port Chicago Reach) adjacent to the Marine Ocean Terminal Concord (MOTCO), vessels may receive authorization to transit through the zone by the Captain of the Port or his designated representative on a case-by-case basis. Additionally, vessels engaged in recreational activities, sightseeing and commercial fishing will have ample space outside of the security zone to engage in these activities. Small entities and the maritime public will be advised of this security zone via public notice to mariners.

Assistance for Small Entities

Under section 213(a) of the Small Business Regulatory Enforcement Fairness Act of 1996 (Pub. L. 104–121), we offer to assist small entities in understanding the rule so that they could better evaluate its effects on them and participate in the rulemaking process. If the rule will affect your small business, organization, or government jurisdiction and you have questions

concerning its provisions or options for compliance, please contact the person listed under **FOR FURTHER INFORMATION CONTACT** for assistance in understanding this rule.

Small businesses may send comments on the actions of Federal employees who enforce, or otherwise determine compliance with, Federal regulations to the Small Business and Agriculture Regulatory Enforcement Ombudsman and the Regional Small Business Regulatory Fairness Boards. The Ombudsman evaluates these actions annually and rates each agency's responsiveness to small business. If you wish to comment on actions by employees of the Coast Guard, call 1–888–REG–FAIR (1–888–734–3247).

Collection of Information

This rule calls for no new collection of information under the Paperwork Reduction Act of 1995 (44 U.S.C. 3501–3520).

Federalism

A rule has implications for federalism under Executive Order 13132, Federalism, if it has a substantial direct effect on State or local governments and would either preempt State law or impose a substantial direct cost of compliance on them. We have analyzed this rule under that Order and have determined that it does not have implications for federalism.

Unfunded Mandates Reform Act

The Unfunded Mandates Reform Act of 1995 (2 U.S.C. 1531–1538) requires Federal agencies to assess the effects of their discretionary regulatory actions. In particular, the Act addresses actions that may result in the expenditure by a State, local, or tribal government, in the aggregate, or by the private sector of $100,000,000 or more in any one year. Though this rule will not result in such an expenditure, we do discuss the effects of this rule elsewhere in this preamble.

Taking of Private Property

This rule will not effect a taking of private property or otherwise have taking implications under Executive Order 12630, Governmental Actions and Interference with Constitutionally Protected Property Rights.

Civil Justice Reform

This rule meets applicable standards in sections 3(a) and 3(b)(2) of Executive Order 12988, Civil Justice Reform, to minimize litigation, eliminate ambiguity, and reduce burden.

Protection of Children

We have analyzed this rule under Executive Order 13045, Protection of Children from Environmental Health Risks and Safety Risks. This rule is not an economically significant rule and does not create an environmental risk to health or risk to safety that may disproportionately affect children.

Indian Tribal Governments

This rule does not have tribal implications under Executive Order 13175, Consultation and Coordination with Indian Tribal Governments, because it does not have a substantial direct effect on one or more Indian tribes, on the relationship between the Federal Government and Indian tribes, or on the distribution of power and responsibilities between the Federal Government and Indian tribes.

Energy Effects

We have analyzed this rule under Executive Order 13211, Actions Concerning Regulations That Significantly Affect Energy Supply, Distribution, or Use. We have determined that it is not a ''significant energy action'' under that order because it is not a ''significant regulatory action'' under Executive Order 12866 and is not likely to have a significant adverse effect on the supply, distribution, or use of energy. The Administrator of the Office of Information and Regulatory Affairs has not designated it as a significant energy action. Therefore, it does not require a Statement of Energy Effects under Executive Order 13211.

Environment

We have analyzed this rule under Commandant Instruction M16475.lD, which guides the Coast Guard in complying with the National Environmental Policy Act of 1969 (NEPA) (42 U.S.C. 4321–4370f), and have concluded that there are no factors in this case that would limit the use of a categorical exclusion under section 2.B.2 of the Instruction. Therefore, this rule is categorically excluded, under figure 2–1, paragraph (34)(g), of the Instruction, from further environmental documentation because we are establishing a security zone.

A final ''Environmental Analysis Check List'' and a final ''Categorical Exclusion Determination'' are available in the docket where located under **ADDRESSES**.

List of Subjects in 33 CFR Part 165

Harbors, Marine safety, Navigation (water), Reporting and recordkeeping requirements, Security measures, Waterways.

■ For the reasons discussed in the preamble, the Coast Guard amends 33 CFR part 165 as follows:

PART 165—REGULATED NAVIGATION AREAS AND LIMITED ACCESS AREAS

■ 1. The authority citation for part 165 continues to read as follows:

Authority: 33 U.S.C. 1226, 1231; 46 U.S.C. Chapter 701; 50 U.S.C. 191, 195; 33 CFR 1.05–1(g), 6.04–1, 6.04–6, and 160.5; Pub. L. 107–295, 116 Stat. 2064; Department of Homeland Security Delegation No. 0170.1.

■ 2. Add § 165.T11–099 to read as follows:

§ 165.T11–099 Security Zone; Navigable Waters of the United States Surrounding Military Ocean Terminal Concord (MOTCO), Concord, California.

(a) *Location.* The security zone, which will be marked by lighted buoys, will encompass the navigable waters, extending from the surface to the sea floor, surrounding the Military Ocean Terminal Concord, Concord, California, within a line connecting the following coordinates: latitude 38°03′07″ N and longitude 122°03′00″ W; thence to latitude 38°03′15″ N and longitude 122°03′04″ W; thence to latitude 38°03′30″ N and longitude 122°02′35″ W; thence to latitude 38°03′50″ N and longitude 122°01′15″ W; thence to latitude 38°03′41″ N and longitude 122°00′03″ W; thence to latitude 38°03′18″ N and longitude 121°59′31″ W, and along the shoreline back to the beginning point.

(b) *Regulations.* (1) In accordance with the general regulations in § 165.33 of this part, entering, transiting through or anchoring in this zone is prohibited unless authorized by the Coast Guard Captain of the Port, San Francisco Bay, or his designated representative.

(2) Persons desiring to transit the area of the security zone may contact the Patrol Commander on scene on VHF–FM channel 13 or 16 or the Captain of the Port at telephone number 415–399–3547 to seek permission to transit the area. If permission is granted, all persons and vessels must comply with the instructions of the Captain of the Port or his or her designated representative.

(c) *Authority.* In addition to 33 U.S.C. 1231 and 50 U.S.C. 191, the authority for this section includes 33 U.S.C. 1226.

(d) *Enforcement.* The U.S. Coast Guard may be assisted in the patrol and enforcement of the security zone by local law enforcement and the MOTCO police as necessary.

(e) *Effective period.* This section becomes effective at 7 a.m. PST on December 21, 2003, and terminates at 11:59 p.m. PST on January 3, 2004.

Dated: December 17, 2003.

Gerald M. Swanson,

Captain, U.S. Coast Guard, Captain of the Port, San Francisco Bay, California.

[FR Doc. 03–31892 Filed 12–24–03; 8:45 am]

BILLING CODE 4910–15–U

ENVIRONMENTAL PROTECTION AGENCY

40 CFR Part 52

[TN–200328; FRL–7596–6]

Approval and Promulgation of Air Quality Implementation Plans; Memphis-Shelby County; Revised Format for Materials Being Incorporated by Reference

AGENCY: Environmental Protection Agency (EPA).

ACTION: Final rule; notice of administrative change.

SUMMARY: EPA is revising the format of 40 CFR part 52 for materials submitted by Memphis-Shelby County that are incorporated by reference (IBR) into the State Implementation Plan (SIP). The regulations affected by this format change have all been previously submitted by the local agency and approved by EPA.

This format revision will affect the ''Identification of Plan'' sections of 40 CFR part 52, as well as the format of the SIP materials that will be available for public inspection at the Office of the Federal Register (OFR), the Air and Radiation Docket and Information Center, and the Regional Office. The sections of 40 CFR part 52 pertaining to provisions promulgated by EPA or local-submitted materials not subject to IBR review remain unchanged.

EFFECTIVE DATE: This action is effective December 29, 2003.

ADDRESSES: SIP materials which are incorporated by reference into 40 CFR part 52 are available for inspection at the following locations: Environmental Protection Agency, Region 4, 61 Forsyth Street, SW., Atlanta, GA 30303; Office of Air and Radiation Docket and Information Center, Room B–108, 1301 Constitution Avenue, (Mail Code 6102T) NW., Washington, DC 20460, and Office of the Federal Register, 800 North Capitol Street, NW., Suite 700, Washington, DC.

FOR FURTHER INFORMATION CONTACT: Ms. Anne Marie Hoffman at the above Region 4 address, by phone at (404) 562–9074, or by electronic mail at *hoffman.anne@epa.gov.*

SUPPLEMENTARY INFORMATION: The SIP is a living document which the State can revise as necessary to address the unique air pollution problems in the state. Therefore, EPA from time to time must take action on SIP revisions containing new and/or revised regulations as being part of the SIP. On May 22, 1997, (62 FR 27968) EPA revised the procedures for incorporating by reference Federally-approved SIPs, as a result of consultations between EPA and OFR. The description of the revised SIP document, IBR procedures and ''Identification of Plan'' format are discussed in further detail in the May 22, 1997, **Federal Register** document. On June 30, 1999 EPA published a document in the **Federal Register** (64 FR 35009) beginning the new IBR procedure for Tennessee. In this document EPA is beginning the new IBR procedures for Memphis-Shelby County, Tennessee.

EPA has determined that today's rule falls under the ''good cause'' exemption in section 553(b)(3)(B) of the Administrative Procedures Act (APA) which, upon finding ''good cause,'' authorizes agencies to dispense with public participation and section 553(d)(3) which allows an agency to make a rule effective immediately (thereby avoiding the 30-day delayed effective date otherwise provided for in the APA). Today's rule simply codifies provisions which are already in effect as a matter of law in Federal and approved State programs. Under section 553 of the APA, an agency may find good cause where procedures are ''impractical, unnecessary, or contrary to the public interest.'' Public comment is ''unnecessary'' and ''contrary to the public interest'' since the codification only reflects existing law. Immediate notice in the CFR benefits the public by updating citations.

Statutory and Executive Order Reviews

Under Executive Order 12866 (58 FR 51735, October 4, 1993), this action is not a ''significant regulatory action'' and therefore is not subject to review by the Office of Management and Budget. For this reason, this action is also not subject to Executive Order 13211, ''Actions Concerning Regulations That Significantly Affect Energy Supply, Distribution, or Use'' (66 FR 28355, May 22, 2001). This action merely approves state law as meeting Federal requirements and imposes no additional requirements beyond those imposed by state law. Accordingly, the Administrator certifies that this rule will not have a significant economic impact on a substantial number of small entities under the Regulatory Flexibility Act (5 U.S.C. 601 *et seq.*). Because this rule approves pre-existing requirements under state law and does not impose any additional enforceable duty beyond that required by state law, it does not contain any unfunded mandate or significantly or uniquely affect small governments, as described in the Unfunded Mandates Reform Act of 1995 (Pub. L. 104–4).

This rule also does not have tribal implications because it will not have a substantial direct effect on one or more Indian tribes, on the relationship between the Federal Government and Indian tribes, or on the distribution of power and responsibilities between the Federal Government and Indian tribes, as specified by Executive Order 13175 (65 FR 67249, November 9, 2000). This action also does not have Federalism implications because it does not have substantial direct effects on the States, on the relationship between the national government and the States, or on the distribution of power and responsibilities among the various levels of government, as specified in Executive Order 13132 (64 FR 43255, August 10, 1999). This action merely approves a state rule implementing a Federal standard, and does not alter the relationship or the distribution of power and responsibilities established in the Clean Air Act. This rule also is not subject to Executive Order 13045 ''Protection of Children from Environmental Health Risks and Safety Risks'' (62 FR 19885, April 23, 1997), because it is not economically significant.

In reviewing SIP submissions, EPA's role is to approve state choices, provided that they meet the criteria of the Clean Air Act. In this context, in the absence of a prior existing requirement for the State to use voluntary consensus standards (VCS), EPA has no authority to disapprove a SIP submission for failure to use VCS. It would thus be inconsistent with applicable law for EPA, when it reviews a SIP submission, to use VCS in place of a SIP submission that otherwise satisfies the provisions of the Clean Air Act. Thus, the requirements of section 12(d) of the National Technology Transfer and Advancement Act of 1995 (15 U.S.C. 272 note) do not apply. This rule does not impose an information collection burden under the provisions of the Paperwork Reduction Act of 1995 (44 U.S.C. 3501 *et seq.*).

The Congressional Review Act, 5 U.S.C. section 801 *et seq.*, as added by the Small Business Regulatory Enforcement Fairness Act of 1996, generally provides that before a rule may take effect, the agency promulgating the rule must submit a rule report, which includes a copy of

the rule, to each House of the Congress and to the Comptroller General of the United States. EPA will submit a report containing this rule and other required information to the U.S. Senate, the U.S. House of Representatives, and the Comptroller General of the United States prior to publication of the rule in the **Federal Register**. A major rule cannot take effect until 60 days after it is published in the **Federal Register**. This action is not a ''major rule'' as defined by 5 U.S.C. 804(2).

Under section 307(b)(1) of the Clean Air Act, petitions for judicial review of this action must be filed in the United States Court of Appeals for the appropriate circuit by February 27, 2004. Filing a petition for reconsideration by the Administrator of this final rule does not affect the finality of this rule for the purposes of judicial review nor does it extend the time within which a petition for judicial review may be filed, and shall not postpone the effectiveness of such rule or action. This action may not be challenged later in proceedings to enforce its requirements. (*See* section 307(b)(2).)

List of Subjects in 40 CFR Part 52

Environmental protection, Air pollution control, Carbon monoxide, Incorporation by reference, Intergovernmental relations, Lead, Nitrogen dioxide, Ozone, Particulate matter, Reporting and recordkeeping requirements, Sulfur oxides, Volatile organic compounds.

Dated: November 26, 2003.

A. Stanley Meiburg,

Acting, Regional Administrator, Region 4.

■ Chapter I, title 40, Code of Federal Regulations, is amended as follows:

PART 52—[AMENDED]

■ 1. The authority for citation for part 52 continues to read as follows:

Authority: 42 U.S.C. 7401 *et seq.*

Subpart RR—Tennessee

■ 2. Section 52.2220 is amended:

■ a. By revising paragraph (b) and

■ b. By revising the heading of the existing table in paragraph (c) to read ''Table-1 EPA APPROVED TENNESSEE REGULATIONS'' and adding a new table ''Table-2 EPA APPROVED MEMPHIS-SHELBY COUNTY REGULATIONS'' to the end of paragraph (c) to read as follows:

§ 52.2220 Identification of plan.

* * * * *

(b) *Incorporation by reference.* (1) Material listed in paragraph (c) of this section with an EPA approval date prior to December 1, 1998, was approved for Tennessee (Table 1 of the Tennessee State Implementation Plan) and January 1, 2003 for Memphis-Shelby County (Table 2 of the Tennessee State Implementation Plan) and paragraph (d) of this section with an EPA approval date prior to December 1, 1998, was approved for Tennessee (Source-Specific Requirements) was approved for incorporation by reference by the Director of the Federal Register in accordance with 5 U.S.C. 552(a) and 1 CFR part 51. Material is incorporated as it exists on the date of the approval, and notice of any change in the material will be published in the **Federal Register**. Entries in Table 2 of paragraph (c) of this section with EPA approval dates after January 1, 2003, will be incorporated by reference in the next update to the SIP compilation.

(2) EPA Region 4 certifies that the rules/regulations provided by EPA in the SIP compilation at the addresses in paragraph (b)(3) of this section are an exact duplicate of the officially promulgated State rules/regulations which have been approved as part of the State and Local Implementation Plans listed in paragraph (b)(1) of this section.

(3) Copies of the materials incorporated by reference may be inspected at the Region 4 EPA Office at 61 Forsyth Street, SW., Atlanta, GA 30303; the Office of the Federal Register, 800 North Capitol Street, NW., Suite 700, Washington, DC; or at the EPA, Office of Air and Radiation Docket and Information Center, Room B–108, 1301 Constitution Avenue, (Mail Code 6102T) NW., Washington, DC 20460.

(c) * * *

TABLE 2.—EPA APPROVED MEMPHIS-SHELBY COUNTY REGULATIONS

State citation	Title/subject	State effective date	EPA approval date	Explanation
Division I Generally				
Section 16–46	Definitions	8/14/89	6/15/89, 54 FR 25456	
Section 16–47	Abbreviations, Acronyms & Symbols	8/14/89	6/15/89, 54 FR 25456	
Section 16–48	Words, Phrases Substituted in State Regulations Adopted by Reference.	8/14/89	6/15/89, 54 FR 25456	
Section 16–49	Ambient Air Quality Standards	8/14/89	6/15/89, 54 FR 25456	
Section 16–50	Open Burning	8/14/89	6/15/89, 54 FR 25456	
Section 16–51	Severability of Parts of Articles	8/14/89	6/15/89, 54 FR 25456	
Division II Enforcement				
Section 16–56	Violations of Chapter—Notice; Citation; Injunctive Relief	8/14/89	6/15/89, 54 FR 25456	
Section 16–57	Penalties, Misdemeanor, Civil, Noncompliance	8/14/89	6/15/89, 54 FR 25456	
Section 16–58	Variances	8/14/89	6/15/89, 54 FR 25456	
Section 16–59	Emergency Powers of Health Officer	8/14/89	6/15/89, 54 FR 25456	
Division III Air Pollution Control Board				
Section 16–71	Created; Membership; Term of Office; Jurisdiction; Hearings; Appeals.	8/14/89	6/15/89, 54 FR 25456	
Division IV Source Emissions Standards				
Section 16–77	Construction and Operating Permits	8/14/89	6/15/89, 54 FR 25456	
Section 16–78	Process Emissions Standards	8/14/89	6/15/89, 54 FR 25456	
Section 16–79	Nonprocess Emission Standards	8/14/89	6/15/89, 54 FR 25456	
Section 16–80	Volatile Organic Compounds	8/14/89	6/15/89, 54 FR 25456	

TABLE 2.—EPA APPROVED MEMPHIS-SHELBY COUNTY REGULATIONS—Continued

State citation	Title/subject	State effective date	EPA approval date	Explanation
Section 16–82	Control of Sulfur Dioxide Emissions	8/14/89	6/15/89, 54 FR 25456	
Section 16–83	Visible Emissions	8/14/89	6/15/89, 54 FR 25456	
Section 16–84	Particulate Matter from Incinerators	8/14/89	6/15/89, 54 FR 25456	
Section 16–85	Required Sampling, Recording, and Reporting	5/20/96	3/19/96, 61 FR 11136	
Section 16–86	Methods of Sampling and Analysis	8/14/89	6/15/89, 54 FR 25456	
Section 16–87	Limits on Emissions due to Malfunctions, Startups & Shutdowns.	8/14/89	6/15/89, 54 FR 25456	
Section 16–88	Nuisance Abatement	8/14/89	6/15/89, 54 FR 25456	
Section 16–89	Fugitive Dust	8/14/89	6/15/89, 54 FR 25456	
Section 16–90	General Alternate Emission Standard	8/14/89	6/15/89, 54 FR 25456	
Section 16–91	Lead Emission Standards	8/14/89	6/15/89, 54 FR 25456	

* * * * *

[FR Doc. 03–31587 Filed 12–24–03; 8:45 am]

BILLING CODE 6560–50–P

ENVIRONMENTAL PROTECTION AGENCY

40 CFR Part 62

[PA 124–4222; FRL–7603–4]

Approval and Promulgation of State Air Quality Plans for Designated Facilities and Pollutants, Commonwealth of Pennsylvania; Control of Landfill Gas Emissions From Existing Municipal Solid Waste Landfills

AGENCY: Environmental Protection Agency (EPA).

ACTION: Final rule.

SUMMARY: EPA is approving the Commonwealth of Pennsylvania (the Commonwealth) municipal solid waste landfill plan (the plan) for implementing emission guideline (EG) requirements promulgated under the Clean Air Act (the Act). The plan establishes enforceable nonmethane organic compounds (NMOC) emissions limits for existing landfills within the Commonwealth, excluding the geographic areas under the authority of Allegheny County and the City of Philadelphia.

EFFECTIVE DATE: This final rule is effective January 28, 2004.

ADDRESSES: Copies of the documents relevant to this action are available for public inspection during normal business hours at the Air Protection Division, U.S. Environmental Protection Agency, Region III, 1650 Arch Street, Philadelphia, Pennsylvania 19103; and the Pennsylvania Department of Environmental Protection, Bureau of Air Quality, P.O. Box 8468, 400 Market Street, Harrisburg, Pennsylvania 17105.

FOR FURTHER INFORMATION CONTACT: James B. Topsale, P.E., at (215) 814–2190, or by e-mail at *topsale.jim@epa.gov.*

SUPPLEMENTARY INFORMATION:

I. Background

On June 24, 2003, EPA published a direct final rule (68 FR 37421) approving the Pennsylvania section 111(d) landfill plan (the plan). Also, on that date, EPA published a proposed rule (68 FR 37449) to allow interested parties to submit comments. During the public comment period, EPA received numerous adverse comments and questions from The Alliance for A Clean Environment (ACE). As a result, on August 19, 2003, EPA withdrew the direct final rule granting approval of the Pennsylvania plan (68 FR 49706).

II. Response(s) to Public Comments

Many of the comments and questions EPA received from ACE (the ''commenter'') are not relevant or germane to the Pennsylvania plan approval process in the context of section 111(d) Clean Air Act requirements, and the related regulatory provisions of 40 CFR part 60, subparts B, Cc, and WWW. In this section of the **Federal Register** notice, EPA is responding primarily to those adverse comments and questions that possibly could be considered relevant or germane to the plan approval process in the context of section 111(d) requirements only. The many ACE comments and questions, which are not relevant to the plan approval, address the following generic and source specific issues:

(a) Ambient air quality and emission standards for criteria pollutants, and related health impacts, as regulated under section 110 of the Act;

(b) Toxic air pollutants, and related health impacts, as regulated under section 112 of the Act;

(c) Radioactive landfill gas emissions, and related health impacts;

(d) Suggested revisions or amendments to EPA's promulgated landfill rules—EG and new source performance standards (NSPS); and

(e) Clean Air Act violations at a specific landfill facility and EPA's enforcement response.

All of the above listed issues are beyond the scope of EPA's section 111(d) plan requirements and approval authority. Any ACE issue, which is not listed generically above is also considered irrelevant to this plan approval action. EPA's responses to possible relevant issues and questions are given below.

A Summary of Comments and Questions—EPA Responses

1. How were Pennsylvania communities notified that they had an opportunity to comment on the plan? *Response*—Three separate PADEP public hearings were held on the plan in June 1997. Prior to each hearing, a thirty (30) day notice was published in one or more newspapers that serve the public hearing site area. These notices were published in six (6) prominent Pennsylvania newspapers and the Pennsylvania bulletin. The PADEP has met EPA's public notification and public participation requirements of 40 CFR 60.23. This is discussed in EPA's June 24, 2003 **Federal Register** notice (68 FR 37421), paragraph II. J, A Record of the Public Hearing on the State Plan.

2. On what basis does EPA view the plan approval as a non-controversial action? *Response*—EPA's action is based on section 111(d) requirements of the Act, not sections 110 and 112, relating to state plans and requirements for criteria (*e.g.*, ozone) and hazardous (*e.g.*, dioxins/furans, mercury compounds, and radionuclides) air pollutants, respectively. The Pennsylvania landfill plan contains requirements that are no less stringent than those required by section 111(d) of the Act and the related provisions of 40 CFR part 60, subparts B and Cc. Also, the plan contains

facility specific compliance schedules that are expeditious, as required by subpart B, and require final compliance by a date earlier than that of the generic compliance schedule under the Federal Plan, 40 CFR part 62, subpart GGG, promulgated on November 8, 1999. The Federal plan is applicable to all affected landfills located in those states without an approved plan, such as Pennsylvania, until the state plan is approved by EPA. The Pennsylvania plan meets all applicable federal requirements, as discussed in EPA's June 24, 2003 **Federal Register** notice and the related technical support document (TSD).

3. What does ''controlled'' mean to EPA? *Response*—Section 111 of the Act requires EPA to promulgate EG and NSPS based on the application of what is referred to as best demonstrated technology (BDT), considering costs and any nonair quality health and environmental impacts and energy requirements, at the time the EG and NSPS are promulgated. The EG and NSPS establish a nationwide minimum level of control, for specific stationary source categories, based on the use of BDT. BDT for landfills, emitting 50 megagrams per year of NMOC or more, requires the reduction of MSW landfill gas emissions with: (a) A well designed and operated gas collection system and (b) a control device capable of reducing NMOC in the collected gas by 98 weight percent. Both EPA landfill rules (the EG and NSPS) recognize that various combustion devices, including flares, can be an effective means of reducing, by 98% or better, the NMOC emissions collected from a landfill. The BDT requirements for landfills are stipulated in the promulgated March 12, 1996 MSW landfill EG and the related NSPS, subparts Cc and WWW, sections 60.33c(c); and 60.752(b)(2)(ii) and (iii), respectively. More details about landfill gas control technologies and their performance are discussed in the preamble to the proposed EPA landfill rules (56 FR 24476, May 30, 1991). Also, additional information is given in EPA's proposed landfill rule amendments, as published in the May 23, 2002 **Federal Register** (67 FR 36477).

4. EPA admits to the public health dangers of landfill gas (*i.e.*, NMOC) emissions, so why wouldn't EPA require the safest technology? *Response*—Consistent with the requirements of section 111 of the Act, EPA's landfill rules set a nationwide minimum level of control based on the use of BDT. EPA believes BDT control alternatives are safe for the operators and impacted community, providing the control equipment is properly designed, constructed, and operated. Because NMOC are health-related, states plans must ordinarily be at ''least as stringent'' as the EG. However, nothing under EPA's section 111 plan regulations, 40 CFR part 60, subpart B, prohibits the PADEP from adopting and enforcing more stringent emission standards. Nevertheless, the submitted Pennsylvania plan control requirements are no less stringent than BDT, as stipulated and required in subpart B and the EG, subpart Cc.

5. Does Pennsylvania have the legal authority to do anything about Clean Air Act [MSW landfill rule] violations in the past? *Response*—A state can only enforce section 111(d) plan requirements if (a) it has received EPA approval of the state plan, or (b) it has requested and received delegation of the Federal plan, 40 CFR part 62, subpart GGG. Neither is the case with the PADEP. At this time, the PADEP can enforce state only requirements. When EPA approves the Pennsylvania plan, PADEP will then have the authority under federal law to enforce the state plan , including possible ''past'' violations. PADEP has satisfactorily demonstrated its authority to implement the state plan, as stated in EPA's approval notice (68 FR 37422) of June 24, 2003.[1]

6. Why hasn't the Pottstown Landfill been included in this source inventory? *Response*—Any landfill that was modified or reconstructed after May 30, 1991 is subject to subpart WWW, and not the requirements of section 111(d) of the Act. A modification occurs if there is a physical change at the landfill that increases the capacity of the landfill beyond its permitted capacity. Based on documents from the PADEP and the Pottstown's landfill engineer, the landfill is a modified source, and thus subject to the NSPS, subpart WWW, and not section 111(d) requirements of either the Pennsylvania or Federal plan. Although the landfill EG and NSPS both require use of the same BDT, both stipulate different initial reporting and final compliance date requirements. However, if we assume that the Pottstown Landfill is a designated facility, subject to section 111(d) requirements, and was somehow overlooked in the Pennsylvania plan inventory, EPA's earlier plan approval notice (68 FR 37424) states, ''* * * if an unknown designated landfill is not covered by the scope of this plan and is discovered after EPA plan approval, that landfill will be subject to the promulgated Federal plan requirements until the PADEP amends its plan to include the previously unknown designated landfill.'' In other words, under EPA's approval action, the Pottstown landfill would be covered by the promulgated Federal plan, even if at a later date it is determined that the facility is in fact subject to section 111(d) requirements.

7. With a health threat of NMOC emissions, why would a landfill get 2½ years to comply? *Response*—Considering the size and NMOC applicability thresholds of affected landfills, EPA believes 2½ years is generally expeditious. This timeframe is reflected in the promulgated EG, NSPS, and the Federal plan. As noted above, the Pennsylvania plan requires final compliance earlier than what is stipulated in the Federal plan.

8. How is the applicability threshold (50 megagrams per year) determined and by whom? *Response*—The measurement methods, applicable to both existing and new landfills, are specified in the landfill NSPS at section 60.754, Test Methods and procedures. Although the landfill owner/operator conducts the tests, both PADEP and EPA have oversight authority and can require a source retest with regulatory personnel on site during the test.

9. Were violations reported to EPA by PADEP under the plan provision that requires state submittal of annual reports on plan enforcement? *Response*—Under the plan, the noted reports are not due until one year after EPA approval of the plan. See the EPA **Federal Register** notice of June 24, 2003 (68 FR 37423), section II. K, Provision for Annual State Progress Reports to EPA. Within one year of EPA's approval of the plan, EPA expects the PADEP will begin submittal of annual compliance reports.

10. How were the people notified about changes to the original plan? *Response*—Other than changes in order to meet EPA promulgated revisions to the EG, we know of no plan changes, subsequent to its original submittal, that relaxes plan applicability, emission standards, operating requirements, recordkeeping and reporting, and compliance dates.

11. The commenter objects to PADEP's retention of source ''trade secret'' information, and its unavailability to the public, and questions what method or process trade secret information can be expected from operating a landfill. *Response*—It appears that PADEP's willingness to

[1] With respect to the enforcement of NSPS requirements, on May 8, 1985, PADEP received automatic delegation of all NSPS from EPA. See the August 23, 1985 **Federal Register**. Accordingly, the PADEP has had the authority to enforce subpart WWW requirements since March 12, 1996, the date of rule promulgation

release all source compliance and emissions data, except for that relating to ''trade secrets,'' is consistent with EPA's subpart B requirements, 40 CFR 60.25(c). 40 CFR 60.25(c) only requires public access to compliance and emissions data that is correlated with applicable emissions standards (*e.g.*, NMOC).

12. The commenter questions the Pennsylvania plan requirements regarding the frequency of emissions monitoring and the reliability of collected data. *Response*—The frequency of monitoring and the collection of reliable data are consistent with applicable EG requirements, 40 CFR 60.34c and 60.35c, as noted in EPA's June 24, 2003 **Federal Register** notice (68 FR 37423), and the related technical support document (TSD).

III. Final Action

EPA is approving the Pennsylvania plan. This determination is based upon the rationale discussed in the proposed and related direct final rulemakings (68 FR 37449 and 37421, June 24, 2003) and EPA's evaluation of submitted public comments and questions, as dicussed above. Any revisions to the plan or associated landfill air quality operating permits will not be considered part of the applicable plan until submitted by the PADEP in accordance with the provisions of 40 CFR 60.28.

IV. Statutory and Executive Order Reviews

A. General Requirements

Under Executive Order 12866 (58 FR 51735, October 4, 1993), this action is not a ''significant regulatory action'' and therefore is not subject to review by the Office of Management and Budget. For this reason, this action is also not subject to Executive Order 13211, ''Actions Concerning Regulations That Significantly Affect Energy Supply, Distribution, or Use'' (66 FR 28355, May 22, 2001). This action merely approves state law as meeting Federal requirements and imposes no additional requirements beyond those imposed by state law. Accordingly, the Administrator certifies that this rule will not have a significant economic impact on a substantial number of small entities under the Regulatory Flexibility Act (5 U.S.C. 601 *et seq.*). Because this rule approves pre-existing requirements under state law and does not impose any additional enforceable duty beyond that required by state law, it does not contain any unfunded mandate or significantly or uniquely affect small governments, as described in the Unfunded Mandates Reform Act of 1995 (Pub. L. 104–4). This rule also does not have tribal implications because it will not have a substantial direct effect on one or more Indian tribes, on the relationship between the Federal Government and Indian tribes, or on the distribution of power and responsibilities between the Federal Government and Indian tribes, as specified by Executive Order 13175 (65 FR 67249, November 9, 2000). This action also does not have Federalism implications because it does not have substantial direct effects on the States, on the relationship between the national government and the States, or on the distribution of power and responsibilities among the various levels of government, as specified in Executive Order 13132 (64 FR 43255, August 10, 1999). This action merely approves a state rule implementing a Federal standard, and does not alter the relationship or the distribution of power and responsibilities established in the Clean Air Act. This rule also is not subject to Executive Order 13045 ''Protection of Children from Environmental Health Risks and Safety Risks'' (62 FR 19885, April 23, 1997), because it is not economically significant.

In reviewing 111(d) plan submissions, EPA's role is to approve state choices, provided that they meet the criteria of the Clean Air Act. In this context, in the absence of a prior existing requirement for the State to use voluntary consensus standards (VCS), EPA has no authority to disapprove a 111(d) plan submission for failure to use VCS. It would thus be inconsistent with applicable law for EPA, when it reviews a 111(d) plan submission, to use VCS in place of a 111(d) plan submission that otherwise satisfies the provisions of the Clean Air Act. Thus, the requirements of section 12(d) of the National Technology Transfer and Advancement Act of 1995 (15 U.S.C. 272 note) do not apply. This rule does not impose an information collection burden under the provisions of the Paperwork Reduction Act of 1995 (44 U.S.C. 3501 *et seq.*).

B. Submission to Congress and the Comptroller General

The Congressional Review Act, 5 U.S.C. 801 *et seq.*, as added by the Small Business Regulatory Enforcement Fairness Act of 1996, generally provides that before a rule may take effect, the agency promulgating the rule must submit a rule report, which includes a copy of the rule, to each House of the Congress and to the Comptroller General of the United States. Section 804 exempts from section 801 the following types of rules: (1) Rules of particular applicability; (2) rules relating to agency management or personnel; and (3) rules of agency organization, procedure, or practice that do not substantially affect the rights or obligations of non-agency parties. 5 U.S.C. 804(3). EPA is not required to submit a rule report regarding today's action under section 801 because this is a rule of particular applicability establishing source-specific requirements for sixteen (16) specific sources.

C. Petitions for Judicial Review

Under section 307(b)(1) of the Clean Air Act, petitions for judicial review of this action must be filed in the United States Court of Appeals for the appropriate circuit by February 27, 2004. Filing a petition for reconsideration by the Administrator of this final rule does not affect the finality of this rule for the purposes of judicial review nor does it extend the time within which a petition for judicial review may be filed, and shall not postpone the effectiveness of such rule or action. This action, approving the Pennsylvania section 111(d) MSW landfill plan, may not be challenged later in proceedings to enforce its requirements. (See section 307(b)(2).)

List of Subjects in 40 CFR Part 62

Environmental protection, Air pollution control, Carbon monoxide, Incorporation by reference, Intergovernmental relations, Nitrogen dioxide, Ozone, Particulate matter, Reporting and recordkeeping requirements, Sulfur oxides, Volatile organic compounds.

Dated: December 15, 2003.

Thomas Voltaggio,

Acting Regional Administrator, Region III.

■ 40 CFR part 62, subpart NN, is amended as follows:

PART 62—[AMENDED]

■ 1. The authority citation for part 62 continues to read as follows:

Authority: 42 U.S.C. 7401 *et seq.*

Subpart NN—Pennsylvania

■ 2. Sections 62.9635, 62.9636, and 62.9637 are added to subpart NN, ''Landfill Gas Emissions From Existing Municipal Solid Waste Landfills'' to read as follows:

§ 62.9635 Identification of plan.

Section 111(d) plan for municipal solid waste landfills, as submitted on July 1, 1997, and as amended through April 9, 2003 by the Pennsylvania Department of Environmental Protection. The plan excludes the

geographical areas under the authority of Allegheny County and the City of Philadelphia.

§ 62.9636 Identification of sources.

The plan applies to existing Pennsylvania landfills for which construction, reconstruction, or modification was commenced before May 30, 1991, that accepted waste at any time since November 8, 1987, or that have additional capacity available for future waste deposition, as described in 40 CFR part 60, subpart Cc.

§ 62.9637 Effective date.

The effective date of the plan for municipal solid waste landfills is January 28, 2004.

[FR Doc. 03–31866 Filed 12–24–03; 8:45 am]

BILLING CODE 6560–50–U

ENVIRONMENTAL PROTECTION AGENCY

40 CFR Part 70

[CA 110–OPPa; FRL–7603–1]

Approval and Promulgation of Operating Permits Program; San Diego County Air Pollution Control District

AGENCY: Environmental Protection Agency (EPA).

ACTION: Direct final rule.

SUMMARY: EPA is taking direct final action to approve revisions to the San Diego County Air Pollution Control District Operating Permits (Title V) Program. Under authority of the Clean Air Act as amended in 1990 (CAA or the Act), we are approving a rule revision that addresses a change in the major source threshold for volatile organic compounds (VOCs) and oxides of nitrogen (NO_X). This change is based on the redesignation of San Diego County as in attainment of the federal one-hour ozone standard. As a result of this action, some sources that would have previously been considered major sources, and therefore would have been required to obtain a Title V operating permit, would no longer need to apply for a Title V permit. We are also approving revisions to several other parts of San Diego's Title V program. For more information see ''What is being addressed in this document,'' below.

DATES: These rule revisions are effective on February 27, 2004 without further notice, unless EPA receives adverse comments by January 28, 2004. If we receive such comment, we will publish a timely withdrawal in the **Federal Register** to notify the public that these revisions will not take effect.

ADDRESSES: Send comments to Gerardo Rios, Permits Office Chief (AIR–3), U.S. Environmental Protection Agency, Region IX, 75 Hawthorne Street, San Francisco, CA 94105–3901 or e-mail to *rios.gerardo@epa.gov.* Comments may also be submited at *http://www.regulations.gov.*

You can inspect copies of the submitted rule revisions, EPA's technical support documents (TSDs), and public comments at our Region IX office during normal business hours by appointment.

FOR FURTHER INFORMATION CONTACT: Kathleen Stewart, EPA Region IX, (415) 947–4119, *stewart.kathleen@epa.gov.*

SUPPLEMENTARY INFORMATION:

I. The Part 70 Operating Permits Program
A. What is the part 70 operating permits program?
B. What is the Federal approval process for revisions to an operating permits program?
C. What does Federal approval of State revisions mean to me?
II. This Action
A. What revisions are being approved?
B. Have the requirements for approval been met?
C. Public comment and final action.
III. Statutory and Executive Order Reviews

I. The Part 70 Operating Permits Program

A. What Is the Part 70 Operating Permits Program?

The Clean Air Act Amendments (CAA) of 1990 require all states to develop an operating permits program that meets federal criteria listed in 40 Code of Federal Regulations (CFR) part 70. In implementing this program, the states are to require certain sources of air pollution to obtain permits that contain all applicable requirements under the CAA. One purpose of the part 70 operating permits program (also known as a Title V program) is to improve enforcement by issuing each source a single permit that consolidates all of the applicable CAA requirements into a federally-enforceable document. By consolidating all of the applicable requirements for a facility into one document, the source, the public, and the permitting authorities can more easily determine what CAA requirements apply and how compliance with those requirements is determined.

B. What Is the Federal Approval Process for Revisions to an Operating Permits Program?

In order for state regulations to be incorporated into the federally-enforceable part 70 operating permits program, states must formally adopt regulations consistent with state and federal requirements. Once a state regulation is adopted, the state submits it to the EPA for inclusion into the approved operating permits program. The EPA must provide public notice and seek additional public comment regarding the proposed federal action on the state submission. If adverse comments are received, they must be addressed prior to any final federal action by EPA.

C. What Does Federal Approval of State Revisions Mean to Me?

Enforcement of a state regulation is primarily a state responsibility both before and after incorporation into the federal program. However, after a state regulation has been federally approved, the EPA is authorized to take enforcement action against violators, and under section 304 of the CAA, citizens are authorized to take civil action to address violations. In addition, federal approval of state regulations ensures that the state program is consistent with federal requirements.

II. This Action

A. What Revisions Are Being Approved?

EPA has requested that each permitting authority periodically submit any revised part 70 rules for approval as a revision to their approved part 70 program. In a letter dated August 19, 2003, San Diego County Air Pollution Control District requested that EPA approve revisions to Rules 1401(c); 1410(i), (j), (l), and (q); 1418(b), (c), and (e); 1415 (a); 1421(a) and (b); and 1425(a) and (b). A complete listing of each rule change is contained in the technical support document which is a part of the docket for this action and which is available from the EPA contact above. A few of the rule revisions which may be of interest, however, are discussed here. The remaining revisions are administrative in nature and do not change the substantive requirements of the rule.

Rule 1401(c): The District added language to exclude non-road engines from the definition for major stationary source; added a definition for non-road engine by reference to 40 CFR part 89; changed the major source threshold for VOCs and NO_X from 50 tons per year (tpy) to 100 tpy in response to the redesignation of San Diego County as in attainment of the federal one-hour ozone standard (*see* 68 FR 37976, June 26, 2003); and clarified the role of fugitive emissions in determining if a source is major.

Rule 1410(j): The District clarified the requirements needed to qualify for a minor permit modification and clarified that the time frame for action applies to complete applications.

Rule 1410(l): The District clarified the requirements for making section 502(b)(10) changes under Title V of the Clean Air Act, added requirements to notify the federal EPA of such changes, shortened the time period for notifying the Air Pollution Control Officer (APCO) and the federal EPA of such changes from 45 to 7 days, shortened the time period for the APCO and the federal EPA to object to such changes from 45 to 7 days, added provisions for incorporating changes into the permit, and added language requiring that any Title V monitoring or compliance certifications be based on the changed characteristic(s).

Rule 1410(q): The District added language expanding compliance plan requirements, clarifying the requirements for processing applications for minor or significant permit modifications using the Administrative Permit Amendment procedures in Rule 1410(i); shortened the public review and comment period from 45 to 30 days; added language committing the APCO to consider and respond to only those comments which are relevant to the permit review and appropriate for public comment; and clarified under what conditions the applicant may commence operation.

Rule 1415(a): The District shortened the period for public notice and comment from 45 to 30 days.

Rule 1418(c): In order to allow time for an appeal to the Hearing Board, the District increased the time period allowed for delay in the submission of decisions on permits to operate and appeals to the federal EPA from 10 to 30 days after notice has been provided to the applicant.

Rule 1418 (e): The District has added language to allow 30 days following the end of EPA review to address comments.

Rule 1421(b): The District clarified that the reports that must be maintained for at least five years and submitted to the District are monitoring reports.

B. Have the Requirements for Approval Been Met?

Our review of the material submitted indicates that the District has amended rules for the Title V program in accordance with the requirements of section 502 of the CAA and the federal rule, 40 CFR part 70, and has met the requirement for a program revision as established in 40 CFR 70.4(i).

C. Public Comment and Final Action

EPA is fully approving the revisions to San Diego County's part 70 operating permits program because we believe they are consistent with Title V of the Clean Air Act and 40 CFR part 70. We are processing this action as a direct final action because the revisions to the existing rules are noncontroversial. Therefore, we do not think anyone will object to this approval. However, in the Proposed Rules section of this **Federal Register**, we are simultaneously proposing approval of the same submitted rules. If we receive adverse comments by January 28, 2004, we will publish a timely withdrawal in the **Federal Register** to notify the public that the direct final approval will not take effect and we will address the comments in a subsequent final action based on the proposal. If we do not receive timely adverse comments, the direct final approval will be effective without further notice on February 27, 2004. Please note that if EPA receives adverse comment on an amendment, paragraph, or section of this rule and if that provision may be severed from the remainder of the rule, EPA may adopt as final those provisions of the rule that are not the subject of an adverse comment.

III. Statutory and Executive Order Reviews

Under Executive Order 12866 (58 FR 51735, October 4, 1993), this action is not a ''significant regulatory action'' and therefore is not subject to review by the Office of Management and Budget. For this reason, this action is also not subject to Executive Order 13211, ''Actions Concerning Regulations That Significantly Affect Energy Supply, Distribution, or Use'' (66 FR 28355, May 22, 2001). This action merely approves state law as meeting federal requirements and imposes no additional requirements beyond those imposed by state law. Accordingly, the Administrator certifies that this rule will not have a significant economic impact on a substantial number of small entities under the Regulatory Flexibility Act (5 U.S.C. 601 *et seq.*). Because this rule approves pre-existing requirements under state law and does not impose any additional enforceable duty beyond that required by state law, it does not contain any unfunded mandate or significantly or uniquely affect small governments, as described in the Unfunded Mandates Reform Act of 1995 (Public Law 104–4).

This rule also does not have tribal implications because it will not have a substantial direct effect on one or more Indian tribes, on the relationship between the Federal government and Indian tribes, or on the distribution of power and responsibilities between the Federal Government and Indian tribes, as specified by Executive Order 13175 (65 FR 67249, November 9, 2000). This action also does not have Federalism implications because it does not have substantial direct effects on the States, on the relationship between the national government and the States, or on the distribution of power and responsibilities among the various levels of government, as specified in Executive Order 13132 (64 FR 43255, August 10, 1999). This action merely approves a state rule implementing a federal standard, and does not alter the relationship or the distribution of power and responsibilities established in the Clean Air Act. This rule also is not subject to Executive Order 13045 ''Protection of Children from Environmental Health Risks and Safety Risks'' (62 FR 19885, April 23, 1997), because it is not economically significant.

In reviewing state operating permits programs submitted pursuant to Title V of the CAA, EPA will approve state programs provided that they meet the criteria of the Clean Air Act. In this context, in the absence of a prior existing requirement for the State to use voluntary consensus standards (VCS), EPA has no authority to disapprove a SIP submission for failure to use VCS. It would thus be inconsistent with applicable law for EPA, when it reviews a SIP submission, to use VCS in place of a SIP submission that otherwise satisfies the provisions of the Clean Air Act. Thus, the requirements of section 12(d) of the National Technology Transfer and Advancement Act of 1995 (15 U.S.C. 272 note) do not apply. This rule does not impose an information collection burden under the provisions of the Paperwork Reduction Act of 1995 (44 U.S.C. 3501 *et seq.*).

The Congressional Review Act, 5 U.S.C. 801 *et seq.*, as added by the Small Business Regulatory Enforcement Fairness Act of 1996, generally provides that before a rule may take effect, the agency promulgating the rule must submit a rule report, which includes a copy of the rule, to each House of the Congress and to the Comptroller General of the United States. EPA will submit a report containing this rule and other required information to the U.S. Senate, the U.S. House of Representatives, and the Comptroller General of the United States prior to publication of the rule in the **Federal Register**. A major rule cannot take effect until 60 days after it is published in the **Federal Register**.

This action is not a ''major rule'' as defined by 5 U.S.C. 804(2).

Under section 307(b)(1) of the Clean Air Act, petitions for judicial review of this action must be filed in the United States Court of Appeals for the appropriate circuit by February 27, 2004. Filing a petition for reconsideration by the Administrator of this final rule does not affect the finality of this rule for the purposes of judicial review nor does it extend the time within which a petition for judicial review may be filed, and shall not postpone the effectiveness of such rule or action. This action may not be challenged later in proceedings to enforce its requirements. (*See* section 307(b)(2).)

List of Subjects in 40 CFR Part 70

Environmental protection, Administrative practice and procedure, Air pollution control, Intergovernmental relations, Operating permits, Reporting and recordkeeping requirements.

Dated: December 15, 2003.

Keith Takata,

Acting Regional Administrator, Region IX.

■ Part 70, Chapter I, Title 40 of the Code of Federal Regulations is amended as follows:

PART 70—[AMENDED]

■ 1. The authority citation for part 70 continues to read as follows:

Authority: 42 U.S.C. 7401 *et seq.*

Subpart F—California

■ 2. Appendix A to Part 70 is amended by adding under ''California'' paragraph (x)(5) to read as follows:

Appendix A to Part 70—Approval Status of State and Local Operating Permits Programs

* * * * *

California

* * * * *

(x) * * *

(5) Revisions were submitted on August 19, 2003, effective February 27, 2004.

* * * * *

[FR Doc. 03–31872 Filed 12–24–03; 8:45 am]

BILLING CODE 6560–50–P

Proposed Rules

Federal Register
Vol. 68, No. 248
Monday, December 29, 2003

This section of the FEDERAL REGISTER contains notices to the public of the proposed issuance of rules and regulations. The purpose of these notices is to give interested persons an opportunity to participate in the rule making prior to the adoption of the final rules.

DEPARTMENT OF AGRICULTURE

Agricultural Marketing Service

7 CFR Parts 1124 and 1131

[Docket No. AO–368–A32, AO–271–A37; DA–03–04]

Milk in the Pacific Northwest and Arizona-Las Vegas Marketing Areas; Reconvening of Hearing on Proposed Amendments to Tentative Marketing Agreements and Orders

7 CFR part	Marketing area	AO Nos.
1124	Pacific Northwest ..	AO–368-A32
1131	Arizona-Las Vegas	AO–271-A37

AGENCY: Agricultural Marketing Service, USDA.

ACTION: Proposed Rule; Notice of reconvened public hearing on proposed rulemaking.

SUMMARY: This notice announces the reconvening of the public hearing begun on September 23, 2003, in Tempe, Arizona, and reconvened on November 17, 2003, in Seattle, Washington, to consider proposals to amend the producer-handler provisions of the Arizona-Las Vegas and Pacific Northwest orders and to consider elimination of the ability to simultaneously pool the same milk on the Arizona-Las Vegas milk order and on a State-operated order that provides for marketwide pooling. The proposals seek to, among other things, end the regulatory exemption of producer-handlers from the pooling and pricing provisions of these two milk marketing orders if their Class I route distribution exceeds three million pounds of milk per month in either order.

DATES: The hearing will reconvene at 8:30 a.m. on Tuesday, January 20, 2004.

ADDRESSES: The reconvened hearing will be held at the Embassy Suites Hotel Alexandria, 1900 Diagonal Road, Alexandria, VA 22314, telephone: (703) 684–5900.

FOR FURTHER INFORMATION CONTACT: Jack Rower, Marketing Specialist, Order Formulation and Enforcement Branch, USDA/AMS/Dairy Programs, STOP 0231-Room 2971, 1400 Independence Avenue, SW, Washington, DC 20250–0231, (202) 720–2357, e-mail address *jack.rower@usda.gov.*

Persons requiring a sign language interpreter or other special accommodations should contact Joanne Walter via email *jwalter@fmmaseattle.com* before the reconvened hearing begins.

SUPPLEMENTARY INFORMATION:

Prior documents in this proceeding:

Notice of Hearing: Issued July 31, 2003; published August 6, 2003 (68 FR 46505).

Correction to Notice of Hearing: Issued August 20, 2003; published August 26, 2003 (68 FR 51202).

Notice of Reconvened Hearing: Issued October 27, 2003; published October 31, 2003 (68 FR 62027).

Notice is hereby given that the reconvened hearing that was adjourned in Seattle, Washington, on November 21, 2003, by the Administrative Law Judge designated to hold said hearing and preside thereof will reconvene in session at 8:30 a.m., January 20, 2004, at the Embassy Suites Hotel Alexandria Hotel, 1900 Diagonal Road, Alexandria, VA 22314. At this reconvened hearing, additional testimony will be received on proposed amendments 1 through 5, listed in the initial hearing notice (68 FR 46505) and as corrected (68 FR 51202), to the tentative marketing agreements and to the orders regulating the handling of milk in the Arizona-Las Vegas and Pacific Northwest marketing areas.

List of Subjects in 7 CFR Parts 1124 and 1131

Milk marketing orders.

Authority: 7 U.S.C. 601–674.

Dated: December 18, 2003.

A.J. Yates,

Administrator, Agricultural Marketing Service.

[FR Doc. 03–31790 Filed 12–24–03; 8:45 am]

BILLING CODE 3410–02–P

DEPARTMENT OF TRANSPORTATION

Federal Aviation Administration

14 CFR Part 39

[Docket No. 2000–CE–43–AD]

RIN 2120–AA64

Airworthiness Directives; AeroSpace Technologies of Australia Pty Ltd Airplanes

AGENCY: Federal Aviation Administration (FAA), DOT.

ACTION: Notice of proposed rulemaking (NPRM).

SUMMARY: The FAA proposes to adopt a new airworthiness directive (AD) for all AeroSpace Technologies of Australia Pty Ltd Model N22B, N22S, and N24A airplanes. This proposed AD would require you to inspect the forward and aft face of the rear fuselage frame for cracks and to repair or modify accordingly. This proposed AD is the result of mandatory continuing airworthiness information issued by the airworthiness authority for Australia. We are issuing this proposed AD to detect and correct cracks in the rear fuselage frame, which could result in failure of the fuselage rear bulkhead and consequent loss of structural integrity.

DATES: We must receive any comments on this proposed AD by February 2, 2004.

ADDRESSES: Use one of the following to submit comments on this proposed AD:

- *By mail:* FAA, Central Region, Office of the Regional Counsel, Attention: Rules Docket No. 2000–CE–43–AD, 901 Locust, Room 506, Kansas City, Missouri 64106.
- *By fax:* (816) 329–3771.
- *By e-mail: 9-ACE–7-Docket@faa.gov.* Comments sent electronically must contain ''Docket No. 2000–CE–43–AD'' in the subject line. If you send comments electronically as attached electronic files, the files must be formatted in Microsoft Word 97 for Windows or ASCII.

You may get the service information identified in this proposed AD from AeroSpace Technologies of Australia Pty Ltd; 226 Lorimer Street, Port Melbourne Victoria 3207, Australia.

You may view the AD docket at FAA, Central Region, Office of the Regional Counsel, Attention: Rules Docket No.

2000–CE–43–AD, 901 Locust, Room 506, Kansas City, Missouri 64106. Office hours are 8 a.m. to 4 p.m., Monday through Friday, except Federal holidays.

FOR FURTHER INFORMATION CONTACT: Ron Atmur, Senior Aerospace Engineer, Airframe Branch, ANM–120L, FAA, Los Angeles Aircraft Certification Office, 3960 Paramount Boulevard, Lakewood, California 90712–4137; telephone: (562) 627–5224; facsimile: (562) 627–5210.

SUPPLEMENTARY INFORMATION:

Comments Invited

How do I comment on this proposed AD?

We invite you to submit any written relevant data, views, or arguments regarding this proposal. Send your comments to an address listed under **ADDRESSES**. Include ''AD Docket No. 2000–CE–43–AD'' in the subject line of your comments. If you want us to acknowledge receipt of your mailed comments, send us a self-addressed, stamped postcard with the docket number written on it. We will date-stamp your postcard and mail it back to you.

Are there any specific portions of this proposed AD I should pay attention to?

We specifically invite comments on the overall regulatory, economic, environmental, and energy aspects of this proposed AD. If you contact us through a nonwritten communication and that contact relates to a substantive part of this proposed AD, we will summarize the contact and place the summary in the docket. We will consider all comments received by the closing date and may amend this proposed AD in light of those comments and contacts.

Discussion

What events have caused this proposed AD?

The Civil Aviation Safety Authority (CASA), which is the airworthiness authority for Australia, recently notified FAA that an unsafe condition may exist on all AeroSpace Technologies of Australia Pty Ltd N22 and N24 series airplanes. The CASA received a number of reports of airplanes with cracks around the rivet heads on the rear bulkhead frame. The cracks could result in failure of the fuselage rear bulkhead and consequent loss of airplane control.

What are the consequences if the condition is not corrected?

We are issuing this proposed AD to detect and correct cracks in the rear fuselage frame, which could result in failure of the fuselage rear bulkhead and consequent loss of airplane control.

Is there service information that applies to this subject?

AeroSpace Technologies of Australia Pty Ltd has issued the Nomad Alert Service Bulletin—53–15, which incorporates the following pages.

Effective pages	Revision level	Date
1–31 (reprint of entire service bulletin)	2	October 6, 1997.
1 through 4, 13 through 19, and 23 and 24	3	June 1, 1999.

What are the provisions of this service information?

The service bulletin includes procedures for inspecting the rear fuselage bulkhead of aircraft for cracks and making required repairs and/or modifications.

What action did the CASA take?

The CASA classified this service bulletin as mandatory and issued Australian AD Number AD/GAF–N22/65 amendment 3, dated May 5, 2000, to ensure the continued airworthiness of these airplanes in Australia.

Did the CASA inform the United States per the bilateral airworthiness agreement?

These AeroSpace Technologies of Australia Pty Ltd Model N22B, N22S, and N24A airplanes are manufactured in Australia and are type-certificated for operation in the United States under the provisions of section 21.29 of the Federal Aviation Regulations (14 CFR 21.29) and the applicable bilateral airworthiness agreement.

Under this bilateral airworthiness agreement, the CASA has kept us informed of the situation described above.

FAA's Determination and Requirements of this Proposed AD

What has FAA decided?

We have examined the CASA's findings, reviewed all available information, and determined that AD action is necessary for products of this type design that are certificated for operation in the United States.

Since the unsafe condition described previously is likely to exist or develop on other AeroSpace Technologies of Australia Pty Ltd Models N22B, N22S, and N24A airplanes of the same type design that are registered in the United States, we are proposing AD action to detect and correct cracks in the rear fuselage frame.

What would this proposed AD require?

This proposed AD would require you to incorporate the actions in the previously-referenced service bulletin.

How does the revision to 14 CFR part 39 affect this proposed AD?

On July 10, 2002, we published a new version of 14 CFR part 39 (67 FR 47997, July 22, 2002), which governs FAA's AD system. This regulation now includes material that relates to altered products, special flight permits, and alternative methods of compliance. This material previously was included in each individual AD. Since this material is included in 14 CFR part 39, we will not include it in future AD actions.

Costs of Compliance

How many airplanes would this proposed AD impact?

We estimate that this proposed AD affects 14 airplanes in the U.S. registry.

What would be the cost impact of this proposed AD on owners/operators of the affected airplanes?

We estimate the following costs to accomplish the proposed inspection:

Labor cost	Parts cost	Total cost per airplane	Total cost on U.S. operators
General Visual Inspection—0.5 work hours est. $60 per hour = $30.	No parts needed for inspection	$30	$420
Detailed Visual Inspection—5 work hours est. $60 per hour = $300.	No parts needed for inspection	$300	$4,200

We estimate the following costs to accomplish any necessary repairs that would be required based on the results of the proposed inspection. We have no way of determining the number of airplanes that may need these repairs:

Labor cost	Parts cost	Total cost per airplane
Repair—20 work hours est. $60 per hour = $1,200	$1,000	$2,200

We estimate the following costs to accomplish the proposed modification:

Labor cost	Parts cost	Total cost per airplane	Total cost on U.S. operators
Modification—24 work hours est. $60 per hour = $1,440	$500	$1,940	$27,160

Regulatory Findings

Would this proposed AD impact various entities?

We have determined that this proposed AD would not have federalism implications under Executive Order 13132. This proposed AD would not have a substantial direct effect on the States, on the relationship between the national Government and the States, or on the distribution of power and responsibilities among the various levels of government.

Would this proposed AD involve a significant rule or regulatory action?

For the reasons discussed above, I certify that this proposed AD:

1. Is not a ''significant regulatory action'' under Executive Order 12866;
2. Is not a ''significant rule'' under the DOT Regulatory Policies and Procedures (44 FR 11034, February 26, 1979); and
3. Will not have a significant economic impact, positive or negative, on a substantial number of small entities under the criteria of the Regulatory Flexibility Act.

We prepared a summary of the costs to comply with this proposed AD and placed it in the AD Docket. You may get a copy of this summary by sending a request to us at the address listed under **ADDRESSES**. Include ''AD Docket No. 2000–CE–43–AD'' in your request.

List of Subjects in 14 CFR Part 39

Air transportation, Aircraft, Aviation safety, Safety.

The Proposed Amendment

Accordingly, under the authority delegated to me by the Administrator, the Federal Aviation Administration proposes to amend 14 CFR part 39 as follows:

PART 39—AIRWORTHINESS DIRECTIVES

1. The authority citation for part 39 continues to read as follows:

Authority: 49 U.S.C. 106(g), 40113, 44701.

§ 39.13 [Amended]

2. The FAA amends § 39.13 by adding the following new airworthiness directive (AD):

AeroSpace Technologies of Australia Pty Ltd: Docket No. 2000–CE–43–AD

When Is the Last Date I Can Submit Comments on This Proposed AD?

(a) We must receive comments on this proposed airworthiness directive (AD) by February 2, 2004.

What Other ADs Are Affected By This Action?

(b) None.

What Airplanes Are Affected By This AD?

(c) This AD affects the following airplane models and line sequence numbers (serial numbers) that are certificated in any category:

Models	Line sequence numbers
(1) N22B and N22S.	1 through 9, 11 through 29, 31, 33, 35, 37, 39 through 41, 43, 45, 47 through 59, 61, 63, 65 through 70, 82 through 88, 90 through 95, 97, 100, 102 through 114, 116, 118, 125, 126, 131 through 134, 136 through 138, 141, and 143 through 170.
(2) N24A	10, 30, 32, 34, 36, 38, 42, 44, 46, 60, 62, 64, 71 through 81, 89, 96, 98, 99, 101, 115, 117, 119 through 124, 127 through 130, 135, 139, 140, and 142.

What Is the Unsafe Condition Presented in This AD?

(d) This AD is the result of reports of cracks around the rivet heads on the rear bulkhead frame. The actions specified in this AD are intended to detect and correct cracks in the rear fuselage bulkhead. The cracks could result in failure of the fuselage rear bulkhead and consequent loss of structural integrity.

What Must I Do To Address This Problem?

(e) To address this problem, you must do the following:

Action	Compliance	Procedures
(1) Perform a general visual inspection of the forward face of the rear fuselage frame for cracks.	*For airplanes that have not been repaired as described in the service bulletin:* Inspect within 50 hours time in service (TIS) after the effective date of this AD, if not already inspected. Repetitively inspect every 100 hours TIS thereafter until the modification in paragraph (e)(4) of this AD is done. *For airplanes that have been repaired as described in the service bulletin:* Inspect within 500 hours TIS after repair or next 100 hours TIS after the effective date of this AD, whichever occurs later. Repetitively inspect every 100 hours TIS thereafter until the modification in paragraph (e)(4) of this AD is done.	Do the inspection following Section 2.A of Nomad Service Bulletin ANMD–53–15. (*See* paragraph (f) of this AD for a list of effective pages.)
(2) Perform a detailed visual inspection of the aft face of the rear fuselage frame for cracks.	*For airplanes that have not been repaired as described in the service bulletin:* Inspect within 100 hours TIS after the effective date of this AD. Repetitively inspect every 300 hours TIS thereafter until the modification in paragraph (e)(4) of this AD is done.. *For airplanes that have been repaired as described in the service bulletin:* Inspect within 500 hours TIS after repair or 100 hours TIS after the effective date of this AD, whichever occurs later. Repetitively inspect every 300 hours TIS thereafter or until the modification in paragraph (e)(4) of this AD is done.	Do the inspection following Section 2.A of Nomad Service Bulletin ANMD–53–15. (*See* paragraph (f) of this AD for a list of effective pages.)
(3) Repair any cracks found during any general or detailed inspection required by this AD.	If any cracks are found during a general or detailed inspection, the airplane must be repaired before further flight. *See* compliance for modification below.	Do repairs following Section 2.B of Nomad Service Bulletin ANMD–53–15. (*See* paragraph (f) of this AD for a list of effective pages.)
(4) Modify the airplane by installing AeroSpace Technologies of Australia Modification N806.	*For airplanes that have not been repaired before the effective date of this AD:* Modification is mandatory within 100 hours TIS or 12 months of the effective date of this AD, whichever occurs sooner. Modification terminates the inspection requirements of this AD. *For aircraft that have been repaired before the effective date of this AD:*. Modification is mandatory within 3,000 effective hours TIS after incorporation of the repair or 18 months after the effective date of this AD, whichever occurs later. Modification terminates the inspection rerquirements of this AD.	Do modification following Section 2.C of Nomad Service Bulletin ANMD–53–15. (*See* paragraph (f) of this AD for a list of effective pages.)

(f) The Aerospace Technologies of Australia Pty Ltd has issued the Nomad Alert Service Bulletin-53–15, which incorporates the following pages.

Effective pages	Revision level	Date
1–31 (reprint of entire service bulletin)	2	October 6, 1997
1 through 4, 13 through 19, and 23 and 24	3	June 1, 1999

May I Request an Alternative Method of Compliance?

(g) You may request a different method of compliance or a different compliance time for this AD by following the procedures in 14 CFR 39.13. Send your request to Ron Atmur, Senior Aerospace Engineer, Airframe Branch, ANM–120L, FAA, Los Angeles Aircraft Certification Office, 3960 Paramount Boulevard, Lakewood, California 90712–4137; telephone: (562) 627–5224; facsimile: (562) 627–5210. For information on any already approved alternative methods of compliance, contact Ron Atmur at the above mentioned address.

May I Get Copies of the Documents Referenced in This AD?

(h) You may get copies of the documents referenced in this AD from AeroSpace Technologies of Australia Pty Ltd, 226 Lorimer Street, Port Melbourne Victoria 3207, Australia. You may view these documents at FAA, Central Region, Office of the Regional Counsel, 901 Locust, Room 506, Kansas City, Missouri 64106.

Is There Other Information That Relates to This Subject?

(i) Australian Airworthiness Directive AD/GAF–N22/65 Amdt 3, dated May 5, 2000, also addresses the subject of this AD.

Issued in Kansas City, Missouri, on December 17, 2003.

Michael Gallagher,

Manager, Small Airplane Directorate, Aircraft Certification Service.

[FR Doc. 03–31847 Filed 12–24–03; 8:45 am]

BILLING CODE 4910–13–P

CONSUMER PRODUCT SAFETY COMMISSION

16 CFR Part 1500

Bath Seats; Notice of Proposed Rulemaking

AGENCY: Consumer Product Safety Commission.

ACTION: Notice of proposed rulemaking.

SUMMARY: The Commission is proposing a rule to ban bath seats that do not meet certain requirements under the authority of the Federal Hazardous Substances Act. Bath seats are used to support infants in a tub or sink while they are bathed. The Commission is aware of 106 deaths and 163 non-fatal incidents and complaints from January 1983 through October 2003 involving bath seats. The Commission proposes three requirements with which bath seats must comply.

DATES: Written comments in response to this document must be received by March 15, 2004.

ADDRESSES: Comments should be mailed, preferably in five copies, to the Office of the Secretary, Consumer Product Safety Commission, Washington, DC 20207–0001, or delivered to the Office of the Secretary, Consumer Product Safety Commission, Room 502, 4330 East-West Highway, Bethesda, Maryland; telephone (301) 504–7923. Comments also may be filed by telefacsimile to (301) 504–0127 or by e-mail to *cpsc-os@cpsc.gov.* Comments should be captioned ''NPR for Bath Seats.''

FOR FURTHER INFORMATION CONTACT: Patricia Hackett, Directorate for Engineering Sciences, Consumer Product Safety Commission, Washington, DC 20207; telephone (301) 504–7577.

SUPPLEMENTARY INFORMATION:

A. Background

In July 2000, the Consumer Federation of America and eight additional organizations petitioned the Commission to ban bath seats under the Federal Hazardous Substances Act (''FHSA'').[1] In August 2000, an additional organization, U.S. Public Interest Research Group, submitted a letter requesting to be added to the list of petitioners. On May 30, 2001, the Commission voted to grant the petition and issue an advance notice of proposed rulemaking (''ANPR'') to begin a rulemaking proceeding. The ANPR was published in the **Federal Register** on August 1, 2001. 66 FR 39692. The Commission received 10 comments on the ANPR. The Commission held a public briefing on bath seats on July 28, 2003. Four people submitted written testimony and gave oral testimony at the briefing. Since the briefing, the Commission received six additional written comments. Significant issues raised by these comments and the Commission's responses are discussed in section G below. On October 16, 2003, the Commission voted to issue a notice of proposed rulemaking (''NPR'') proposing that bath seats meet requirements for stability, leg openings and labeling or be considered banned hazardous substances.[2]

When the ANPR was published, the Commission had reports of 78 deaths and 110 non-fatal incidents and complaints associated with bath seats (or bath rings, which are no longer marketed in the U.S.) between January 1983 and May 2001. 66 FR 39693. When the staff presented a briefing package to the Commission in May 2003, the Commission had reports of 96 deaths and 153 non-fatal incidents involving bath seats that occurred from January 1983 to December 2002.[2] [3] As of October 2003, the Commission has reports of 106 deaths and 163 non-fatal incidents involving bath seats. As discussed more fully below, the staff identified three major scenarios that were related to the bath seats' design and materials: (1) The bath seat tipping over during use; (2) the child coming out of the bath seat; and (3) the child becoming entrapped and/or submerged in the leg openings of the bath seat.

B. Statutory Authority

This proceeding is conducted pursuant to the FHSA, 15 U.S.C. 1261 *et seq.* Section 2(f)(1)(D) of the FHSA defines ''hazardous substance'' to include any toy or other article intended for use by children that the Commission determines, by regulation, presents an electrical, mechanical, or thermal hazard. 15 U.S.C. 1261(f)(1)(D). An article may present a mechanical hazard if its design or manufacture presents an unreasonable risk of personal injury or illness during normal use or when subjected to reasonably foreseeable damage or abuse. Among other things, a mechanical hazard can include a risk of injury or illness ''(3) from points or other protrusions, surfaces, edges, openings, or closures, * * * or (8) because of instability, or (9) any other aspect of the article's design or manufacture.'' 15 U.S.C. 1261(s).

Under section 2(q)(1)(A) of the FHSA, a toy, or other article intended for use by children, which is or contains a hazardous substance accessible by a child is a ''banned hazardous substance.'' 15 U.S.C. 1261(q)(1)(A).

Section 3(f) through 3(i) of the FHSA, 15 U.S.C. 1262(f)–(i), governs a proceeding to promulgate a regulation determining that a toy or other children's article presents an electrical, mechanical, or thermal hazard. As provided in section 3(f), this proceeding began with an ANPR. 66 FR 39692. After considering the comments submitted in response to the ANPR, the Commission is now issuing a proposed rule and a preliminary regulatory analysis in accordance with section 3(h) of the FHSA. The Commission will then consider the comments received in response to the proposed rule and decide whether to issue a final rule and a final regulatory analysis. 15 U.S.C. 1262(i)(1). Before the Commission can issue a final rule it must find: (1) If an applicable voluntary standard has been adopted and implemented, that compliance with the voluntary standard is not likely to adequately reduce the risk of injury, or compliance with the voluntary standard is not likely to be substantial; (2) that benefits expected from the regulation bear a reasonable relationship to its costs; and (3) that the regulation imposes the least burdensome alternative that would adequately reduce the risk of injury. *Id.* 1261(i)(2).

C. The Product

Bath seats are used in a tub or sink to support a seated infant while he/she is bathed. They are marketed for use only by infants capable of sitting upright unassisted and who cannot yet pull to a standing position. Current bath seats contain a seating area and are usually held in place by suction cups located at the bottom of the seat. When the Commission first began looking at this issue, bath rings were also being manufactured and marketed in the U.S. Bath rings consisted of a plastic ring with three or four legs with suction cups. The infant would sit directly on the tub or on a sponge pad that was fitted within the ring. Such bath rings are no longer manufactured for the U.S. market, but they would be covered

[1] The other petitioners are Drowning Prevention Foundation; Danny Foundation for Crib and Child Product Safety; Intermountain Injury Control Research Center; California Coalition for Children's Safety and Health; California Drowning Prevention Network; Contra Costa County Childhood Injury Prevention Coalition; Greater Sacramento SAFE KIDS Coalition; and Kids in Danger.

[2] Commissioners Mary Sheila Gall and Thomas H. Moore issued statements. Copies of these statements are available from the Commission's Office of the Secretary or from the Commission's Web site, *http://www.cpsc.gov.*

[3] Numbers in brackets refer to documents listed at the end of this notice.

under the proposed definition of ''bath seat'' if they were to be re-introduced into the U.S. market.[2] As used in this NPR, the term ''bath seat'' includes bath rings.

Current bath seats provide a molded plastic seat for the infant to sit on. They provide support to a seated infant. In addition, there are now some infant bathtubs that convert to bath seats. These convertible bath seats would also be included in the proposed rule's definition of ''bath seat'' because, in the bath seat configuration, they provide support to the front and back of a seated infant.[2]

The traditional infant bath tubs that are used to bathe a reclining infant are not within the scope of the proposed rule. Essential to the proposed definition of ''bath seat'' is that the item provides support at least to the back and front of an infant in a seated position. Although there have been drowning incidents involving infant bath tubs, the hazard scenarios are different from incidents involving bath seats. The bath tub incidents do not involve tipovers, leg opening entrapments and children coming out of the products as the bath seat incidents do.

Bath seats are produced and/or marketed by juvenile product manufacturers and distributors. At the present time, there are two manufacturers and one importer of bath seats active in the U.S. market.[2&8]

In 2000, the Juvenile Products Manufacturers Association (''JPMA'') estimated that there may be up to two million bath seats in use. This is generally consistent with an estimate derived from the American Baby Group's *Baby Products Tracking Study,* 2000. According to the Tracking Study, about 33 percent of new mothers own bath seats or rings. Given the approximately four million annual births in the U.S., the 33 percent ownership rate suggests about 1.3 million bath seats are available for use for infants under the age of one. Including bath seats used by infants older than one, the total number of bath seats in use may be close to two million, as estimated by JPMA.

Retail sales of new bath seats may range from 700,000 to 1,000,000 annually. The American Baby Group survey indicated that 46 percent of bath seats or rings owned by new or expectant mothers were obtained after being used for an older child or borrowed. This suggests that about 54 percent of the bath seats were acquired new, resulting in annual sales of about 700,000 ($.54 \times 1.3$ million). The JPMA estimate of sales is somewhat higher, about 1 million annually.

Bath seats currently sell for about $10 to $16. Bath seats which convert from an infant bath tub to a bath seat sell for about $20 to $25.

D. The Risk of Injury

1. Incident Data

The Commission has reports of 106 deaths and 163 non-fatal incidents and complaints associated with bath seats between January 1983 and October 2003. One hundred-three of the deaths occurred in the absence of a caregiver. In many incidents it is difficult to know the amount of time the caregiver was out of the room. Some reasons that caregivers have cited for leaving children unattended are answering unexpected phone calls, retrieving towels, tending to another child in the home, performing household chores, or watching television. The victims involved in fatal drowning incidents ranged in age from 5 months to 20 months.[2&3]

2. Hazard Scenarios

After examining the bath seat incident reports, the Commission staff identified three major hazard scenarios that were related to the bath seats' design and materials. These are: (1) The bath seat tipping over during use; (2) the child coming out of the bath seat; and (3) the child becoming entrapped and/or submerged in the leg openings of the bath seat.[2&3]

Bath seat tipping over. The staff identified 32 fatalities and 85 non-fatal incidents or complaints involving bath seats tipping over that were reported from January 1983 through October 2003. The children involved ranged from 4 months to 15 months in age. In most of the fatal incidents, a caregiver was not present. However, a caregiver was present in two of the fatalities. The majority of non-fatal incidents were supervised.[2&3]

In many of the tip-over incidents, it appears that the suction cups may not have completely adhered to the tub's surface. It is often difficult to determine the type of surface involved in individual incidents.[2]

Child coming out of bath seat. The staff identified 22 fatalities and 13 non-fatal incidents and complaints involving children coming out of bath seats that were reported from January 1983 through October 2003. In these incidents, the children were found out of the bath seat in the bath water, and the bath seat was still in its upright position. The scenario suggests that the bath seat was unable to restrain the child in the seat. Children involved in these incidents ranged in age from 6 months to 14 months. In all of the fatal incidents and in the majority of non-fatal incidents no caregiver was present.[2&3]

Entrapment and submersion. The staff identified 3 fatalities and 18 non-fatal incidents and complaints involving children entrapped or submerged in bath seats that were reported from January 1983 through October 2003. The children involved in these incidents ranged in age from 3 to 16 months. In one of the fatalities the child was supervised. In the other two, no caregiver was present. The majority of non-fatal incidents were supervised.[2&3]

E. Voluntary Standard

Currently, there is a voluntary standard for bath seats, ASTM F 1967–03. The standard was first published in June 1999. At that time, the standard included marking, labeling, and literature requirements as well as performance requirements addressing stability, static load, latching/locking mechanisms, restraint systems, leg opening sizes and other requirements commonly found in juvenile product standards. A revised standard with requirements for suction cup integrity and a durability requirement for latching/locking mechanisms was published in June 2001. The current version of the standard, ASTM F 1967–03, contains additional revisions that were approved in March 2003 and published in April 2003.[2]

Following is a summary of the performance requirements and their respective test methods specified in ASTM F 1967–03.[2]

Restraint System: If the seat provides back support and side or front support, then a passive crotch restraint must be provided. The ASTM standard does not allow additional restraints that require any action on the part of the caregiver to secure the restraint.

Stability: The bath seat is tested on a smooth surface, in 2 inches of water. A 17-pound force (lbf.) is applied horizontally from the seat. The bath seat complies with the voluntary standard if it does not tip over. Testing is not required on slip-resistant surfaces unless the manufacturer recommends use on slip-resistant surfaces (the Commission is unaware of any bath seats currently sold that are recommended for slip-resistant surfaces).

Static Load: A 30-pound load is placed in the seat for 20 minutes. There shall be no breakage or deformation of the product.

Requirements for Suction Cups (added in 2001): Seats with suction cups

are tested as follows. After soaking in water, a 25-pound vertical pull test is performed in an attempt to remove the suction cups from the seat. After soaking in water, a 25-pound pull test is performed on a seat installed on a smooth bathing surface, in an attempt to disengage the suction cups from the bathing surface. The seat is installed and removed 2000 times on a smooth bathing surface and the second pull test is repeated.

Leg Openings (added in 2003): A torso probe is inserted in the most adverse orientation into each opening of the bath seat from the direction of the occupant seating surface. A 15-pound force is applied. To comply, the bath seat must not permit passage of the torso probe. The tapered end of a shoulder probe is inserted in the most adverse orientation into each opening of the bath seat from the direction of the occupant seating surface. A 15-pound force is applied to the probe in the direction of the major axis. The force is released and a 10-pound force is applied to the top 1.0 inch perimeter of the probe in a direction vertically toward the seating surface. To comply, the 1.0 inch perimeter shall not be permitted to contact the seating surface of the bath seat.

October 2003 ASTM Meeting. On October 1, 2003, the ASTM Bath Seat Subcommittee met and voted to issue a concurrent Main and Subcommittee ballot that will include proposed new stability and labeling requirements.[1] The proposed stability requirement is identical to the stability requirement the Commission is proposing in this NPR. The proposed labeling requirement being balloted is similar to the first two lines of the label the Commission proposes in this NPR. The ASTM proposed label states:

WARNING

Children have drowned when left unattended in bath seats. ALWAYS keep child within arm's reach.

The ballot with these two proposals was issued on November 3, 2003, and results are due back December 8, 2003. The results should be reviewed and discussed at the next ASTM Bath Seat Subcommittee meeting in March 2004.[1]

F. The Proposed Ban

The proposed rule would ban bath seats that do not meet specified requirements for stability, leg openings, and labeling. After considering the incident reports, the Commission believes that these proposed requirements will address the major hazard scenarios involved in bath seat drownings.

1. Stability Requirement

As discussed above, 117 reported incidents involved the bath seat tipping over (32 deaths and 85 non-fatal incidents or complaints). Bath seats currently on the market depend on suction cups for all or part of their stability. If the suction cups fail, either by detaching from the product or detaching from the tub surface, the bath seat can become unstable and tip over.[2]

Most of the reports concerning bath seats tipping over were based on incidents where suction cups on the bottom of the bath seat failed to adhere to the bathtub surface during a child's entire bath. This can happen for several reasons including degradation of the suction cups over time, or dirty or soapy surfaces that affect adhesion of the cups to the tub. In addition, suction cups will not reliably adhere to slip-resistant tubs. In these incidents, failure of the bath seat to continuously adhere to the surface results in an unstable product.[2]

The ASTM subcommittee for bath seats identified this problem, and the current ASTM F 1167–03 requires that manufacturers include warnings against using bath seats on slip-resistant surfaces. However, the current voluntary standard does not require testing on slip-resistant surfaces.[2]

It can be difficult for a consumer to identify a ''slip-resistant'' tub. Although many slip-resistant tubs have texturing that is easily identified (such as a sandpaper-like finish, a pattern of ridges, or consumer-added appliqués) some slip-resistant surfaces have a very subtle finish. A convenience sampling of slip-resistant tubs at a home improvement store by CPSC staff showed some tubs that appeared to be smooth, even though they were ''slip-resistant.'' During testing, CPSC staff noted that suction cups can temporarily form a seal on some abrasive surfaces if the surface has already been flooded with water, but the seal does not last.[2]

Because identifying slip-resistant tubs might be difficult, and testing can be misleading, the Commission believes that warning against the use of bath seats on slip-resistant surfaces will not be effective at preventing incidents. Therefore, the Commission proposes that bath seats' stability be tested on slip-resistant surfaces.

The proposed performance requirement is similar to the stability requirement in ASTM F 1967–03, but instead of testing on a smooth surface, it requires the product to be tested on a slip-resistant surface. The Commission proposes that the slip-resistant test surface be defined as a surface on which commercially available, adhesive backed, slip-resistant tread strips have been applied. Slip-resistant tread strips are used in many applications such as walkways and stairs, as well as bathtubs, to provide traction against slipping. The Commission is not aware of any standard for slip-resistant tread strips, but the desired result of an uneven surface is an inherent characteristic of any slip-resistant tread.[2&4]

A performance requirement that requires all products to remain stable on slip-resistant bathing surfaces should reduce the likelihood of tip-over incidents that are due to surface adhesion failure. A bath seat that is stable on slip-resistant surfaces could depend on its geometry and construction for stability rather than on suction cups. An object will fall over when its center of gravity lies outside its supporting base. The supporting base of bath seats could be designed to be wide enough to prevent tip-overs. Another potential approach might be a bath seat that attaches to one or both of the tub sides.[2&4]

2. Leg Opening Requirement

As discussed above, 21 reported incidents involved children submerged or entrapped in bath seats (3 deaths and 18 non-fatal incidents or complaints). Over the last two years, CPSC staff worked as part of an ASTM task group to develop a performance requirement to address the entrapment and submersion hazard. The performance requirement the task group developed tests all side and leg openings with two test probes—a torso probe and a shoulder probe. To comply with the requirement, the torso probe must not pass through any side or leg openings, and the shoulder probe must not slide through any side or leg openings nor be able to rotate in a manner that allows the upper end of the probe to touch the seating surface.[2&4]

The torso probe is identical to the probe used in the current high chair standard, ASTM F 404–99a, since high chairs are intended for the same minimum developmental stage occupants. Prohibiting passage of the probe is intended to prevent the torso of the occupant from sliding through a side or leg opening. The design of current bath seats can be modified to eliminate openings that are large enough for an infant to slide through, for example by adding more vertical ''bars'' or increasing the width of existing ''bars.''[2&4]

The dimensions of the shoulder probe represent the shoulder breadth and buttock depth of the smallest intended occupant. During the test, the shoulder probe is inserted into each leg opening and a force is applied to the ''shoulder'' end of the probe in an attempt to push it through the opening, or to have it touch the seat base. Prohibiting the probe from contacting the seating surface is intended to prevent an occupant from sliding and rotating in the bath seat to a point where the occupant's shoulder and face is under water. The interior volume of current bath seats can be reduced to prevent an infant from lying down (and possibly becoming entrapped underwater) without preventing older users from occupying the seat.[2&4]

This leg opening performance requirement was recently approved by ASTM and is included in ASTM F 1967–03, published in April of 2003.[2] The Commission is including it in this NPR because, at this time, the leg opening requirement of the voluntary standard has not been implemented. According to relevant legislative history, a voluntary standard is implemented when ''substantial industrywide production of products that comply with the standard has begun.'' H.R. Cong. Rep. No. 208, at 875; U.S. code cong. & Admin. News, 97th Cong., 1st Sess. 1982, Vol. 2 at 1237. This has not yet occurred.

3. Labeling Requirement

As discussed above, 35 reported incidents involved children coming out of bath seats (22 deaths and 13 non-fatal incidents or complaints). The Commission staff considered the incident reports to determine whether performance criteria could be developed that would address this hazard scenario. For the reasons explained below, the staff concluded that no performance criteria could effectively address the hazard scenario of children coming out of the bath seats at this time.

The Commission is concerned that adding an effective restraint system to the seat may change the utility of the bath seat. It could change the product from a bath aid to a bath restraint, making it impractical for its intended purpose of aiding caregivers when bathing children. Essentially, current bath seats maintain the children's seated posture as loosely as possible, so that caregivers have room for their hands to wash children without worrying that the children will fall over or slip down. Bath seats are ''loose supports.'' They are poorly adapted to restraining functions because it is difficult to make an effective ''loose restraint.'' Preventing children from coming out of a bath seat requires a restraint system that is reasonably comfortable and still allows washing. Moreover, in a bathing environment it is easier for children to escape because they are naked and wet. Restraining their slippery bodies comfortably, with room to wash, is extremely difficult because humans are so flexible and jointed.[2&5]

The Commission is also concerned that making the bath seat's seating area smaller by requiring a standard size will not prevent all users from coming out of the bath seat. One approach for a restraint might be simply to reduce the occupant retention area so that it is ''tighter'' on the child. However, this would not be effective for all users because children who may use the bath seat range greatly in size. For example, bath seats that fit large 6-month-old children may still allow small 10-month-old children ample clearance to fit into the seat and come out. Moreover, the large variability in sizes among same-age children in this age range is greater than the growth from age 5 months to 10 months. Thus, requiring that bath seats be made in a smaller, standardized size would be insufficient to create an effective passive restraint system for bath seats.[2&5]

Because a restraint performance requirement does not appear to be a practical approach for preventing children from coming out of a bath seat, the Commission proposes a forceful warning label to warn about the need for constant caregiver attendance.

The Commission believes that the label currently specified in the ASTM standard (see above) needs to be stronger so that consumers understand that the danger of drowning is a real possibility. Some consumers report that leaving a child unattended momentarily is ''understandable,'' to get a towel, answer the phone or doorbell, or help another child, even though some admit they understand that it is a risk to the infant. They may rationalize that they are still ''attending'' to the child if they can ''hear what's going on,'' or if they are ''just in the next room'' and will soon return. Caregivers reading the current warning label may admit that drowning is possible, but may rationalize that it has never happened before. Since they think the event is unlikely, they feel comfortable ignoring the warning and believing the hazard is unlikely. They trust the bath seat and over-apply the success of their prior experiences with it when their child did not come out. A strong warning may counteract some of this behavior. The Commission proposes strengthening the ASTM warning label with statements that expressly explain the danger. The Commission proposes the following language:

⚠ WARNING

Children have drowned while using bath seats.
ALWAYS keep baby within arm's reach.
This bathing aid is NOT a safety device.
Stop using when a child is able to pull to a standing position.

G. Response to Comments

The Commission received ten comments from nine individuals during the ANPR comment period. Eight of the 10 comments supported a ban of the product. One of the 10 supported a mandatory performance standard, and the other commenter supported the development of a voluntary standard. In addition, four individuals submitted written testimony before the Commission's public briefing and gave oral testimony at the briefing. Three of these supported a ban of all bath seats and one supported voluntary standards. After the briefing, the Commission received six additional comments, two supporting a ban of all bath seats, one supporting a mandatory standard, and one supporting terminating the rulemaking (the other two did not express support for any of the options).

Responses to the primary issues raised by the comments follow. The numbers found in parentheses after a comment refer to the commenter number assigned by the Office of the Secretary.

1. Adequacy of Bath Seat Designs and the Voluntary Standard

Comment: Several comments (CH 01–5–3; 5; 6; 7; 8) stated that no standard can adequately address the risk of death and injury associated with bath seats and that ASTM F 1967–01 does not adequately address these issues. Some commenters (CH 01–5–1; 4; 5; 6) specifically pointed out that the size of the leg openings was hazardous.

Response: The Commission believes that the proposed leg opening requirement will address incidents that involve entrapment/submersion, and that the proposed stability requirement can adequately address tip-over incidents.

Comment: Comment CH 01–5–9 asserted that certain design safety measures can be added to make bath seats safer, including the addition of user-activated restraints, and that ASTM should include these safety measures in the voluntary standard.

Response: The Commission agrees that bath seats can be made safer by implementing design safety measures to address the tip-over hazard and the entrapment and submersion hazard. However, a user-activated restraint system that prevents a child from coming out of a seat could make the bath seat impractical for its intended purpose. In addition, the Commission is concerned that caregivers may not use such restraints. As a result, a performance requirement for a restraint system is not a viable approach at this time. The Commission proposes that the coming out hazard be addressed with a forceful warning label to stress the need for constant caregiver attendance.

2. Bath Seat Suction Cups and Performance on Slip-Resistant Surfaces

Comment: Several commenters (CH 01–5–3; 3a; 5; 6) were concerned about the compatibility of bath seats with slip-resistant surfaces, and they stated that ASTM F 1967–01 is not compatible with slip-resistant surfaces. Three comments (CH 01–5–1; 2; 6) concentrated on the poor performance of suction cups in terms of ability to adhere to surfaces.

Response: Current bath seat designs that rely on suction cups for stability will not reliably adhere to non-smooth surfaces such as textured tub surfaces, non-slip abrasive surfaces, or surfaces on which non-slip adhesive treads have been applied. Bath seats that do not rely on suction cups or any kind of surface adhesion for stability should not encounter the same stability problems identified with current bath seats when used on slip-resistant surfaces. The Commission proposes that stability tests on bath seats be performed on a slip-resistant surface.

The ASTM bath seat voluntary standard does not require testing bath seats on slip-resistant surfaces if the manufacturer's instructions state that the product should only be used on a smooth surface. The Commission is not aware of any current bath seat where the instructions state the product can be used on slip-resistant surfaces.

Comment: Comment CH 01–5–2 stated ''if the suction works well enough to keep the seat always upright, it will also work to hold the child underwater, even with a parent struggling to free the child, if the child submarines or slips out of the bath seat.''

Response: The danger of being unable to free a child in a stable, upright seat is only possible if the child can submarine and become entrapped in the seat. The proposed leg opening requirement should prevent this from occurring.

3. A False Sense of Security and Parental Absence

Comment: Several comments (CH 01–5–1; 2; 3; 4; 5; 6; 7; 8) asserted that caregivers are more likely to leave a child alone in a bath seat because the child looks safe in one and warning labels are insufficient to prevent this behavior.

Response: If consumers believe that a bath seat is safe due to its appearance or features, they may choose to ignore the warning. This phenomenon, called ''risk compensation,'' can occur with many products, even those not intended to be safety devices, if the user trusts the device to prevent injury. However, strengthening the warning on the product may help combat any appearance of safety in bath seats. For this reason, the warning should be as powerfully worded as possible.

Comment: Comment CH–01–5–9 implied the problem is not with bath seat designs, but with the people who leave children unattended. This commenter also states ''If the bath seat/ring was 'designed and manufactured' to allow the caregiver to place the child in the tub and walk away then I would heartily agree that these articles constitute a ''mechanical hazard''. But the fact is, these bath aides were not designed or manufactured to be used in such a way.''

Response: As the Commission stated in the ANPR: ''Some caregivers may perceive that the product provides a greater degree of safety than it does. Leaving the child alone could be considered a reasonably foreseeable abuse of the product.'' 66 FR 39697. Existing bath seats do not appear to be adequately designed to protect children against the consequences of this foreseeable misuse. In addition, some mechanical failures—*e.g.*, the seat tipping over or children slipping into leg openings—have occurred in the presence of a caregiver.

4. Utility Age Range

Comment: Comment CH 01–5–8 questioned the age recommendation of 5 to 10 months for bath seats. The commenter suggests that ''6 to 8 months is a much more realistic age range for average children to sit securely and to begin to pull up on objects.''

Response: The relevant developmental milestones for bath seat use are ''sitting unassisted'' and ''pulling to a standing position.'' A significant portion of the population will sit unassisted somewhere between 5 months and 6 months of age, even though the average will fall somewhere just after 6 months. As well, a significant portion of the population will not be able to pull to a stand until sometime after their 9-month birthday. To encompass a reasonable majority of typical users, the Commission believes that bath seat usage will likely occur in the 5- to 10-month age range. However, some users may well achieve the milestones in shorter time spans.

ASTM recently approved a modification to its standard to include an age recommendation for the product of between 5 and 10 months. In addition, the revised standard also requires packaging and instructions wording as follows: ''Product is suitable for children able to sit up unassisted. Product is not suitable for children able to pull up to a standing position who may attempt to climb out.'' The Commission concurs with this recommendation.

5. Bath Seat Incident Rates

Comment: Two comments (CH 01–5–1 and 8) stated that the ''* * * standard has done nothing to slow the bath seat mortality rate.'' and ''* * * the standard has failed to reduce the numbers of drowning and near drowning incidents* * *''

Response: Because the date of manufacture of the bath seats involved in the incidents is not recorded, the Commission cannot determine if the bath seat was manufactured prior to the effective date of a particular ASTM standard. However, as noted in this NPR, the Commission has concerns about the adequacy of the current voluntary standard in addressing deaths and incidents associated with bath seats.

6. Water Level Mark

Comment: Two statements submitted at the Commission briefing (by Rachel Weintraub for CFA and Jack Walsh for the Danny Foundation) recommended putting a water level mark on the bath seat to indicate that the bath water should not be higher than that level. One of the commenters discussed incident data that he claimed supported his opinion. The other commenter recommended that the following be added to the warning label or instructional literature: ''ALWAYS use the least amount of water necessary when bathing a child.''

Response: The Commission is concerned that a water level mark may be interpreted by some caregivers to mean there is a safe water level at which children do not drown. There is no such level. Therefore, the Commission does not support this recommendation. The current ASTM standard requires the following wording on instructional literature: ''Babies can drown in as little as 1 inch of water. ALWAYS bathe your infant using as little water as necessary.'' The Commission believes this is adequate. With regard to incidents cited by the commenter, many of those involved overflowing bath tubs where parents or siblings turned on the water and failed to turn it off. The Commission does not believe that the presence of a water level mark on the product would have addressed these incidents.

7. Labeling

Comment: One statement at the Commission briefing (by Rachel Weintraub for CFA) and one comment submitted after the briefing (by Paul Ware, Chair of ASTM F15.20 Subcommittee) commented on the proposed warning label for bath seats. One stated that it is counterintuitive to come up with a warning label to address the coming out hazard. Another commenter stated that he does not believe that there is adequate rationale for changing the wording from what is currently in the ASTM standard to the wording the Commission is proposing.

Response: As discussed in section F.3 above, the staff explored whether a performance requirement could be developed that would address the coming out hazard, but concluded that no practical and effective performance criteria were possible. As for the need for improvements to the label required by the ASTM standard, the Commission believes that the current label allows parents to rationalize that children have not actually drowned while using a bath seat. The Commission believes its proposed warning label is an improvement because it uses language to warn parents that children actually have drowned while using a bath seat. Incidents involving the absence of caregivers continue to occur, and no other strategy directly addresses this caregiver behavior. The Commission believes that strengthening the label may more strongly influence caregiver behavior and thereby reduce drowning incidents.

Comment: Two commenters (Ms. Weintraub of CFA and Heather Paul of National Safe Kids Campaign) asked that the Commission require a label on bath seats that indicates the product meets the mandatory rule.

Response: The Commission has included such a requirement in other CPSC regulations, such as bike helmets, and believes that this is a reasonable suggestion. Therefore the Commission proposes this requirement in the NPR.

Comment: One commenter (Ms. Weintraub of CFA) requested that there be a requirement that the warning label be ''readable'' when tested for permanence. Another commenter recommended a stronger permanency test for labels than what is currently required in the ASTM standard.

Response: The ASTM standard for bath seats contains a requirement for labels to withstand submersion in water for 20 minutes. CPSC is not aware of any consumer complaints or incidents with regard to illegible labeling on bath seats. Therefore the Commission has no basis to propose a change to the current ASTM test.

Comment: One commenter (Ms. Paul of Safe Kids Campaign) recommends that the warning label on the product also be required to be on the front and back of the packaging.

Response: The Commission believes this is a reasonable suggestion to better ensure that consumers are made aware of the hazards associated with bath seats. Therefore the Commission is including this in the NPR.

8. Data Regarding Bathing Environments of Infants

Comment: One commenter (CH 03–3–5) presented data on bathing environments for a group of children age 5 to 10 months old who drowned in bath tubs from 1994–1999. From these data, she drew conclusions about parental behavior, sibling presence, and the potential effects of a ban of bath seats.

Response: The commenter puts forth the contention that bath seats lead parents to leave their babies alone in the bath, which leads to their greater risk of drowning. This conclusion cannot be drawn from the data she presents. In order to draw conclusions about bath seats leading parents to leave children unattended, we would need to have data on how many bath seat users leave their children unattended and how many non-bath seat users leave their children unattended. These data do not exist.

In addition, in order to draw conclusions about whether bath seat users are at greater or lesser risk of drowning (regardless of the reason), we need data on the number of babies bathed in bath seats and the number bathed without bath seats. These data are not presented by the commenter. The only source of any data on this topic is the Baby Products Tracking Study discussed in the staff's 2001 briefing package and 2003 briefing package. CPSC staff has calculated death data and risk estimates derived from this study.

These data indicate that the risk of drowning in a bathtub is greater with a bath seat than without a bath seat for 5–7 month olds. The risk of drowning with a bath seat is less than that of drowning without a bath seat for 8–10 month olds. Given this analysis, and given that this information alone cannot be used to predict what effect a ban of bath seats may have on caregiver behavior, the Commission concluded that available information cannot predict whether a ban of bath seats would reduce bathtub related drownings.

The Commission is proposing requirements for bath seats that address the mechanical design characteristics that contribute to bath seat drowning incidents. By making bath seats safer, the Commission believes that the number of drowning fatalities can be reduced.

9. Adequacy of ASTM F 1967–03

Comment: Two commenters (Mr. Ware, Chair of ASTM F15 Subcommittee and Frederick Locker, Counsel for the Juvenile Products Manufacturers Association) stated that they believed the existing voluntary standard is adequate and addresses issues previously raised by the Commission.

Response: The Commission believes that the current ASTM standard for bath seats (ASTM F 1967–03) is not adequate. Specifically, there are no performance requirements to ensure that all bath seats are stable on slip-resistant surfaces. This was an issue that was discussed during the May 2001 Commission briefing, and it is not addressed in the newest version of the standard. In addition, it is the Commission's opinion that the labeling requirements of ASTM F 1967–03 need

to be strengthened to more effectively alert caregivers to possible hazards associated with bath seats.[1]

H. Alternatives

The Commission has considered other alternatives to address the drowning hazard posed by bath seats. As discussed below, the Commission does not believe that any of these would adequately reduce the risk of injury.

1. *Propose only two requirements.* The Commission could issue a proposed rule that requires bath seats to comply only with a stability requirement and labeling requirement (or else they would be banned hazardous substances). The Commission considered proposing a rule without a leg opening requirement because the ASTM standard approved in March 2003 includes a leg opening requirement that is identical to the one the staff recommended to the Commission.[2] However, the Commission believes it is appropriate to propose all three requirements since the industry has not had time yet to produce bath seats that comply with the ASTM leg opening requirement. The Commission will re-examine the question of including a leg opening requirement in its rule when the Commission considers whether to issue a final rule.

2. *Ban of all bath seats.* The Commission considered proposing a rule declaring that all bath seats are hazardous substances and therefore banned. However, at this time, it is unclear what the effect of removing all bath seats from the market would be. Available information cannot predict whether fewer children would drown if bath seats were unavailable or if more would drown. CPSC staff examined bath seat-related deaths and bath tub-related deaths for the period 1994 through 1999. The staff's analysis suggests that children ages 5 to 7 months are more at risk from drowning when bathed in bath seats as opposed to being bathed in a bathtub. However, children ages 8 to 10 months, as a group are at a higher risk of drowning when bathed in a bathtub than when bathed in a bath seat. The staff concluded that it could not measure the effect a ban would have on bathing-related drowning because: (1) The analysis suggests that bathing while using a bath seat is riskier for younger bathers, while bathing in bathtubs without a bath seat is riskier for older bathers; (2) the staff necessarily made assumptions to estimate a bath seat user population—these assumptions could affect the accuracy of the results; and (3) the analysis cannot be applied to children younger than 5 months and older than 10 months, so deaths in those age groups are not addressed by the analysis.[2&3]

In contrast to these questions about the possible effect of a total ban on drowning deaths, the Commission believes that the three requirements it proposes should make bath seats safer. The proposed requirements are directed to addressing the specific hazard scenarios that are identified in most fatal incidents.

3. *Voluntary Standard.* The current voluntary standard, ASTM F 1967–03, contains many provisions that the CPSC staff has recommended, including a leg opening requirement. However, it does not require stability testing on slip-resistant surfaces. As discussed above, the suction cups currently used to attach bath seats to a tub's surface do not reliably adhere to slip-resistant surfaces. Many of today's bath tubs have slip-resistant surfaces, and they can be difficult for consumers to identify.[2] The Commission believes that bath seats should be stable when used on the surfaces that are likely to be in consumers' homes. The existing ASTM standard is not adequate in this respect.

The label currently specified in the ASTM F 1967–03 standard may not advise caregivers forcefully enough that a child can drown in a bath seat. The Commission believes that the proposed label would send a stronger message that the caregiver should remain with the child by expressly stating that children have drowned in bath seats and that the bath seat is not a safety device.

I. Preliminary Regulatory Analysis

The Commission has preliminarily determined to ban bath seats that do not meet specified requirements for stability, leg openings, and labeling. Section 3(h) of the FHSA requires the Commission to prepare a preliminary regulatory analysis containing a preliminary description of the potential benefits and costs of the proposed rule, including any benefits or costs that cannot be quantified in monetary terms; an identification of those likely to be affected; discussion of existing or developing standards submitted in response to the ANPR; and a description of reasonable alternatives. 15 U.S.C. 1261(h). The following discussion addresses these requirements.[8] The preliminary regulatory analysis is based on incident data that was reported in the staff's briefing package of May 8, 2003. Since that time there have been additional incidents reported which are included in the incident data discussion at section D.1 of this notice.

Discussion of Proposed Rule

The proposed rule would require bath seats to meet certain requirements, some of which are not currently covered by the voluntary standard. The requirements involve additional criteria for stability, openings, and labeling.

The proposed stability requirement will require the product to resist tip-over when the bath seat is installed on a smooth surface to which commercially available adhesive backed slip resistant tread strips (for bathtub use) have been applied.

In addition to the stability requirement, two probe tests are being proposed that would limit the size of the product's leg openings as well as the seating space, to address the hazards of submersion and entrapment below the water surface. This requirement is part of the newly approved ASTM voluntary standard, but currently marketed bath seats do not meet it.

The labeling requirement would change from what is currently specified in the voluntary standard. The proposed labeling requirement specifies that the product and its packaging be labeled with the safety alert symbol (exclamation mark within an equilateral triangle), the single word WARNING in all capital letters, as well as the following: ''Children have drowned while using bath seats. ALWAYS keep baby within arm's reach. This bathing aid is NOT a safety device. Stop using when child is able to pull up to a standing position.''

Potential Costs of the Proposed Rule

Efforts are underway by at least one U.S. manufacturer to develop a bath seat that will conform to the requirements of the proposed rule. Costs to manufacturers to meet the proposed rule include product development costs and increased costs of production. Product development costs involve costs associated with redesign of the product and retooling of manufacturing equipment. According to an industry representative, new molds for the redesigned product are estimated to cost about $350,000. Product development overhead costs include product design, development and marketing staff time, product testing and focus group expenses. However, these ''product development costs'' will be treated as with any new product development and be amortized over time.

Manufacturers report that there will be an increase in the cost of production associated with additional material, labor and shipping. According to an industry representative, its redesigned bath seat will be larger, heavier, and

more complex to assemble. At the present time, most bath seats are manufactured in the U.S. The proposed rule would require that bath seats entering commerce meet the new requirements within a year of publication of the final rule. Bath seats already in commerce (for example, those on store shelves) will not be affected and will still be saleable. According to one manufacturer, they plan to have bath seats that meet the new voluntary standard leg opening requirement as well as the stability requirement that is part of the proposed rule by the end of 2003. Also, the second manufacturer will probably have bath seats that meet the leg opening requirement by the end of 2003.

Revenues may be affected if sales do not match current levels. Sales may be reduced because of price increases and possible reductions in the utility of the new, safer bath seats. Consumer utility could be reduced if the product is more difficult to use or the age range of users is reduced. On the other hand, the added safety of the product may increase the utility of the product to some consumers, a factor that may be a positive influence on sales.

Currently, bath seats sell for about $10 to $16. Convertible seats, which convert from an infant bathtub to an infant bath seat, sell for about $20 to $25. Based on discussions with an industry representative, bath seat prices will increase to reflect the increased cost associated with producing a complying product. Although exact costs and price increases are not known at this time, industry representatives estimate that complying bath seats will retail for about $20 to $25, with a likely price closer to $25.

All else equal, a price increase of $10 (which represents an increase of more than 50 percent) may reduce the quantity of bath seats demanded, and hence sales. The magnitude of such a reduction is unknown, but would be affected by a number of other factors, including the perceived usefulness of the product, the expected useful life of the product, and other variables such as the number of births, household incomes, and the availability of substitutes.

Despite the relatively large price increase over that of existing bath seats, the reduction in sales may be small if consumers find the product convenient and useful, and expect to use it for a long time. If, for example, a consumer would use a bath seat for a year or more (*i.e.,* for one or more children) the price increase would amount to less than $1 per month. Moreover, all else is not equal. The product will change—it will presumably be safer than the earlier models. If consumers perceive the increased safety, and if safety is an important factor when they purchase products for use with their infant children, the demand for bath seats could increase. Thus, product improvements can conceivably mitigate or even offset the reduction in the quantity demanded associated with the price increase.

Although product design is not specified by the proposed requirement, consumer utility could be affected if changes intended to make bath seats safer also make them more difficult to use, or if the changes tend to limit the age of children that can use them. The analysis by Human Factors indicates that bath seats meeting the proposed requirements could still accommodate the current user population, without a loss of utility. However, since the design is not specified, and we do not know how manufacturers will modify the seats to meet the proposed requirements, we cannot predict if the new designs will provide the same level of usefulness or convenience to caregivers. Any reductions in utility could lead to the reduced use of bath seats, either by reducing sales or actual amount of use. While reduced use would also reduce the risk of drowning in bath seats, the overall risk of drowning would not be eliminated since other modes of bathing children also present a drowning risk.

Potential Benefits of the Proposed Rule

The benefits of the proposed rule will result from a reduction in deaths and injuries due to product failure from tip-over, entrapment and submersion. CPSC is aware of 96 deaths associated with bath seats from January 1983 through December 2002. Eighty-three of these reported deaths occurred in the past ten years (1993 through 2002), a period during which about one-third of all new mothers owned bath seats and the number of bath seats in use remained relatively constant at about two million.[4] Of the 83 reported deaths since 1993, the hazard scenario is known in 57 of the deaths (leaving 26 with unknown scenarios).

Of the 57 deaths in which the scenario is known, 28 (about 50 percent) involved hazards addressed by the performance requirements of the proposed rule (26 involved the tip-over hazard and two involved entrapment/submersion). While we do not know the hazard scenarios in the remaining 26 deaths, if we assume that they are distributed proportionally to the known cases, another 13 deaths (*i.e.* 50 percent) might be also be addressed by the proposed rule. This amounts to about 2.8 to 4.1 deaths annually (*i.e.* 28 deaths/10 years to 41 deaths/10 years), or about 1.4 to 2.05 deaths per million bath seats in use (since about two million were in use annually).

Comparison of Costs and Benefits

As described above, the proposed rule may result in an increase in the retail price of bath seats by about $10. Assuming a $10 price increase, the costs of the proposed rule (*i.e.,* the costs of making bath seats safer) will increase consumer outlays by $10 million per million bath seats sold. Additionally, according to the *Baby Products Tracking Study,* about half of the bath seats were acquired used and therefore are likely used for more than one child. If we assume that bath seats are used for an average of about two years (*i.e.* more than one use cycle), and there are about 1.4 to 2.05 deaths per million bath seats in use annually, each million bath seats would be associated with about 2.8 to 4.1 deaths over their two-year product life.

If the proposed rule eliminates all of these tip-over deaths and entrapment and submersion deaths (*i.e.,* is 100 percent effective in preventing the deaths addressed), then the cost per life saved would range from about $2.4 million to about $3.6 million ($10 million/4.1 deaths to $10 million/2.8 deaths). If the rule were 50 percent effective in preventing the tip-over and entrapment/submersion deaths, then the cost per life saved would range from about $4.9 to $7.1 million per death prevented ($10 million/(4.1 × .5) deaths to $10 million/(2.8 × .5) deaths). Based on current economic literature, empirical estimates of the statistical value of life have generally ranged from about $3 million to $7 million. Thus, for purposes of cost-benefit analysis, even the high estimates of the cost per life saved are generally within the accepted range and suggest that the benefits of the rule would be in line with the costs, even if the standard were only 50 percent effective in preventing addressable deaths.

The proposed rule has the potential to bring about a reduction in deaths from tip-over and entrapment/submersion hazards. However, it is not clear at this time whether manufacturers will design baby bath seats that are safer, while maintaining the current level of

[4] The benefits assessment is limited to the 1993 to 2002 time frame because the number of baby bath seats in use, which is needed to calculate the risk that will be addressed by the proposed rule, was less clear prior to 1993. In addition, there has been improved reporting and collecting of death data in the later years.

consumer utility. If some consumers do not accept the redesigned seats, or use them less frequently (or for a shorter period), and decide instead to bathe their children by other means, the risk of drowning from these alternative bathing methods will be substituted for the bath seat drowning risk.

Alternatives

As discussed above, alternatives to the regulation include a total ban of infant bath seats, relying on a voluntary standard, promulgating a subset of the requirements of the above proposed rule and taking no action.

Option To Ban

The Commission considered the option of proposing a ban that would eliminate bath seats from the marketplace entirely. With this option, the costs would consist of the lost use value, or utility, that consumers derive from the product. Money not spent on bath seats will be spent on other products that provide utility, but there is expected to be some loss in utility that cannot be quantified.

The benefits of a total ban would be the net reduction in deaths that would be prevented by the action. The primary alternative to a ban is the proposed rule for baby bath seats already discussed. Since the proposed rule addresses about half of the child drownings, the additional drownings addressed by a ban would be only a subset of all bath seat drownings—the remaining half.

Furthermore, while a ban would effectively address (on net) only about half of the bath seat drownings, it would expose all bath seat users (*i.e.*, those who would be precluded from using bath seats) to the drowning risks in alternative bathing settings. The risk in alternative settings is not trivial. For example, the analysis by the Directorate for Epidemiology suggests that, for some restricted age groups (*e.g.*, drownings involving children age 8–10 months), the risk of drowning in a bath seat may be substantially lower than in alternative bathing settings. Moreover, when all children age 5–10 months were grouped together in the analysis (the age group for which bath seats are generally recommended), the average bath seat drowning risk was almost 40 percent lower than that of alternative bathtub scenarios. While grouping children across the 5 to 10 month age categories may mask the drowning risk disparities associated with the developmental differences between the younger and older children, as noted by the Directorate for Epidemiology, it nonetheless highlights the fact that the risks associated with alternative bathing methods are substantial and should not be ignored.

If the proposed rule were fully effective in preventing the deaths it addresses, it would likely reduce the risk of drowning in a bath seat by about 50 percent. On the other hand, while a ban would address all bath seat drownings (by eliminating bath seats), it would also expose all the children who would have been bathed in bath seats to the drowning risks in other bathing settings.

In summary, a ban of all bath seats from the marketplace would result in some reduction in consumer utility; however, the impact on child drownings is uncertain, and fatalities could increase.

A Subset of the Performance Requirements: Excluding the Leg Opening Requirement in the Proposed Rule

The Commission considered a subset of the three requirements developed by the staff and discussed earlier as a proposed rule. One reasonable alternative is to publish as a proposed rule the stability and labeling requirements and not the leg opening performance requirement.

If this alternative were proposed, the costs and benefits which were discussed in the foregoing analysis of the proposed rule would change little. Because the entrapment and submarining deaths accounted for only two of the 57 deaths for which the cause was known, exclusion of the leg opening requirement would reduce the benefits by only about 3.5 percent (*i.e.*, 2/57). At the same time, the elimination of the leg opening requirement will not reduce the costs of the proposed rule by much. Based on discussions with the manufacturers of bath seats, the stability requirement requires product redesign and will drive most, if not all, the cost increase associated with the proposed rule. The leg opening requirement, by itself, would not necessitate a product redesign, but would require ''modification'' to the current design, resulting in perhaps a small increase in the product's retail price. Therefore, the elimination of the leg opening requirement would have, at most, a very small impact on the overall cost of the proposed rule as well as on its potential benefits.

No Action

A decision by the Commission to take no action would eliminate the retail price increase associated with making baby bath seats safer. At the same time (and assuming no change in the voluntary standard), absent any intervention by the Commission, additional preventable deaths will likely continue as new parents buy and use baby bath seats that are currently available in the marketplace.

Voluntary Standards

As an alternative to a proposed rule, the Commission has the option of finding that the voluntary standard is adequate and terminating rulemaking. ASTM has recently revised the voluntary standard to address hazards associated with bath seat submersion and entrapment. It is possible that later revisions might incorporate tip-over and labeling requirements that are similar to the proposed rule. If the voluntary standard addresses the same tip-over hazards that are addressed in the proposed rule with equivalent effectiveness, and all suppliers of baby bath seats comply with the voluntary standard, the net benefits of the voluntary standard would be virtually the same as those of the proposed rule. However, at this time, the voluntary standard does not address the tip-over deaths. Nor does it require the stronger label that the staff recommended.

J. Regulatory Flexibility Certification

Under the Regulatory Flexibility Act (''RFA''), when an agency issues a proposed rule, it generally must prepare an initial regulatory flexibility analysis describing the impact that the proposed rule is expected to have on small entities. 5 U.S.C. 603. The RFA does not require a regulatory flexibility analysis if the head of the agency certifies that the rule will not have a significant effect on a substantial number of small entities. *Id.* 605(b).

No available information indicates that the proposed bath seat requirements will have a significant adverse impact on a substantial number of small businesses. Currently, three companies, two U.S. manufacturers and one importer, are known to supply bath seats in the U.S. Two of the firms (one of the manufacturers and the one importer) are small, meeting the U.S. Small Business Administration's definition of small businesses. The two U.S. manufacturers are aware of the progress of this rulemaking, and at least one manufacturer is in the process of developing bath seats to meet the requirements of the proposed rule. The third firm, an importer, may have to find another source for baby bath seats that would meet the proposed rule.[8]

For these reasons, the Commission certifies that the proposed rule banning bath seats that do not meet the specified requirements would not have a

significant effect on a substantial number of small entities.

K. Environmental Considerations

Pursuant to the National Environmental Policy Act, 15 U.S.C. 4321–4347, and in accordance with the Council on Environmental Quality regulations and CPSC procedures for environmental review, 40 CFR part 1500 and 16 CFR part 1021, the Commission has assessed the possible environmental effects associated with the proposed rule banning certain bath seats.

The Commission's regulations state that rules providing design or performance requirements for products normally have little or no potential for affecting the human environment. 16 CFR 1021.5(c)(1). Nothing in this proposed rule alters that expectation.

The transition to bath seats that meet the proposed rule is not expected to have an adverse environmental impact, especially if the effective date of a rule enables the firms to substantially deplete existing non-complying inventory. The U.S. manufacturers are already aware of the Commission's actions, and since there is a proposed one-year lead-time (after issuance of a final rule) before the rule becomes effective, no environmental impact is expected. Moreover, any existing inventory in manufacturers' stocks has the potential to be recycled, *i.e.* reground in order to reuse the plastic components, which constitute the bulk of the seat's construction.[8]

Therefore, because the proposed rule would have no adverse effect on the environment, neither an environmental assessment nor an environmental impact statement is required.

L. Executive Orders

According to Executive Order 12988 (February 5, 1996), agencies must state the preemptive effect, if any, of new regulations.

The FHSA provides that, generally, if the Commission issues a banning rule under section 2(q) of the FHSA to protect against a risk of illness or injury associated with a hazardous substance, ''no State or political subdivision of a State may establish or continue in effect a requirement applicable to such substance and designed to protect against the same risk of illness or injury unless such requirement is identical to the requirement established under such regulations.'' 15 U.S.C. 1261n(b)(1)(B). Upon application to the Commission, a State or local standard may be excepted from this preemptive effect if the State or local standard (1) Provides a higher degree of protection from the risk of injury or illness than the FHSA standard and (2) does not unduly burden interstate commerce. In addition, the Federal government, or a State or local government, may establish and continue in effect a non-identical requirement that provides a higher degree of protection than the FHSA requirement for the hazardous substance for the Federal, State or local government's own use. 15 U.S.C. 1261n(b)(2).

Thus, with the exceptions noted above, the proposed rule banning certain bath seats would preempt non-identical State or local requirements applicable to bath seats designed to protect against the same risk of injury.

The Commission has also evaluated this proposed rule in light of the principles stated in Executive Order 13132 concerning federalism, even though that Order does not apply to independent regulatory agencies such as CPSC. The Commission does not expect that the proposed rule will have any substantial direct effects on the States, the relationship between the national government and the States, or the distribution of power and responsibilities among various levels of government.

M. Effective Date

The rule would become effective one year from publication of a final rule in the **Federal Register** and would apply to bath seats entering the chain of distribution on or after that date. The two U.S. manufacturers are aware of the Commission's proposed requirements. At least one manufacturer has begun product development on a bath seat that meets the proposed requirements. Thus, one year should allow sufficient time for the manufacturers to develop a product that meets the requirements.[2&8]

N. Proposed Findings

When the Commission issues a rule under section 2(q)(1) of the FHSA classifying a substance or article as a banned hazardous substance, the Commission must make certain findings and include these findings in the regulation. 15 U.S.C. 1262(i)(2). The Commission proposes the following findings.

Voluntary standard. The FHSA requires the Commission to make certain findings concerning compliance with and adequacy of a voluntary standard if a relevant voluntary standard has been adopted and implemented. 15 U.S.C. 1262(i)(2). The voluntary standard, ASTM F 1967–03, as it is currently adopted and implemented does not adequately reduce the risk of injury. The current stability provisions do not require testing on slip-resistant surfaces. The current label prescribed by the ASTM standard does not state a strong enough warning. The leg opening requirement has been adopted, but at this time has not yet been implemented. Thus, the Commission proposes to find that the voluntary standard, as it is currently adopted and implemented, does not adequately reduce the risk of injury.

Relationship of benefits to costs. The FHSA requires the Commission to find that the benefits expected from a regulation bear a reasonable relationship to its costs. The Commission estimates the potential benefits of its proposed changes to bath seats to be elimination of 2.8 to 4.1 deaths annually. The Commission estimates that the costs of the rule will be about $10 million per million bath seats sold. If the proposed rule eliminates all of the tipover and entrapment/submersion deaths, the cost per life saved would range from about $2.4 million to about $3.6 million. Even if the proposal were only 50% effective, then the cost per life saved would be from about $4.9 to $7.1 million. Thus, the Commission proposes to find that there is a reasonable relationship between the expected benefits of the rule and its costs.

Least burdensome requirement. The FHSA requires the Commission to find that a regulation imposes the least burdensome alternative that would adequately reduce the risk of injury. *Id.* The Commission considered proposing only two requirements (stability and labeling requirements, but not a leg opening requirement), banning all bath seats, or taking no action and following the ASTM voluntary standard. The Commission is proposing three requirements because at this time, the leg opening requirement in the ASTM standard has not been fully implemented. The Commission will reconsider this issue when it considers a final rule. As discussed above, it is not clear that a ban of all bath seats would reduce drowning deaths any more than the proposed three requirements, and could have the effect of increasing bathtub-related drowning deaths. Thus, the Commission proposes that a ban of bath seats that do not meet the proposed requirements for stability, leg openings and labeling is the least burdensome alternative that would adequately reduce the risk of injury.

List of Subjects in 16 CFR Part 1500

Consumer protection, Hazardous materials, Hazardous substances, Imports, Infants and children, Labeling, Law enforcement, and Toys.

Conclusion

For the reasons stated above, the Commission preliminarily concludes that infant bath seats that do not meet the requirements for stability, leg openings, and labeling that are specified in the proposed rule are hazardous substances under section 2(f)(1)(D) of the FHSA. Such bath seats are intended for children and present a mechanical hazard under section 2(s) of the FHSA because in normal use or when subjected to reasonably foreseeable damage or abuse their design or manufacture presents an unreasonable risk of injury. 15 U.S.C. 1261(s). The risk of injury is from the bath seats' instability, openings, and other aspects of their design or manufacture. Therefore, the Commission proposes to amend title 16 of the Code of Federal Regulations as follows:

PART 1500—HAZARDOUS SUBSTANCES AND ARTICLES: ADMINISTRATION AND ENFORCEMENT REGULATIONS

1. The authority for part 1500 continues to read as follows:

Authority: 15 U.S.C. 1261–1278.

2. Section 1500.18 is amended to add a new paragraph (a)(18) to read as follows:

§ 1500.18 Banned toys and other banned articles intended for use by children.

(a) * * *

(20) Any bath seat (as defined in § 1514.2 of this chapter) that does not comply with the requirements of part 1514 of this chapter.

* * * * *

3. Add part 1514 to read as follows:

PART 1514—REQUIREMENTS FOR BATH SEATS

Sec.

1514.1 Scope.
1514.2 Definitions.
1514.3 Requirements.
1514.4 Test Methods.
1514.5 Marking and Labeling.
FIGURE 1 TO PART 1514—DIAGRAM OF FORCE APPLICATION
FIGURE 2 TO PART 1514—BATH SEAT TORSO PROBE
FIGURE 3 TO PART 1514—BATH SEAT SHOULDER PROBE

Authority: 15 U.S.C. 1261, 1262.

§ 1514.1 Scope.

This part 1514 sets forth the requirements for a bath seat as defined in § 1514.2. Bath seats meeting these requirements are exempted from 16 CFR 1500.18(a)(20).

§ 1514.2 Definitions.

As used in this part 1514:

(a) *Bath seat* means an article that is used in a bath tub, sink, or similar bathing enclosure and that provides support, at a minimum, to the front and back of a seated infant during bathing by a caregiver.

(b) *Most adverse* means a test condition that produces the most severe result that would indicate a failure of the test.

(c) *Test surface* means a smooth surface (cleaned thoroughly with an alcohol or other solvent-based cleaner and dried) upon which commercially available adhesive backed safety tread strips (for bath use) have been applied over the Test Surface Coverage Area in the following manner. The safety tread strips shall be rectangular in shape, approximately .75 inch (1.9 cm) wide by 7 inches (17.8 cm) or greater in length, and evenly applied from edge to edge so that they are .5 inch (1.3 cm) or less apart from each other.

(d) *Test Surface Coverage Area* means the area of the test surface that extends a minimum of 1 inch (2.5 cm) beyond the perimeter outlined by any part of the bath seat that is designed to contact a surface.

§ 1514.3 Requirements.

(a) *Stability.* The geometry and construction of the bath seat shall not allow the bath seat to tip over after being tested in accordance with § 1514.4(a).

(b) *Leg openings.* (1) All openings on the sides of the bath seat through which a seated occupant can slide or otherwise insert any extremity shall not permit the passage of the Bath Seat Torso Probe when tested in accordance with § 1514.4(b)(1).

(2) All openings on the sides of the bath seat through which a seated occupant can slide or otherwise insert any extremity shall not permit any portion of the top 1 inch (2.5 cm) perimeter of the shoulder breadth end of the Bath Seat Shoulder Probe to contact the seating surface of the bath seat when tested in accordance with § 1514.4(b)(2).

§ 1514.4 Test methods.

(a) *Stability.* (1) Install the bath seat according to the manufacturer's instructions onto the prepared Test Surface. Flood the Test Surface with water that is at an initial temperature of 100 to 105° F (37.8 to 10.6° C) and a depth of 2 inch (51 mm) above the highest point of the occupant seating surface.

(2) Rigidly attach a 1 by ¼-inch (25 × 6-mm) aluminum flat bar to the inside edge of the occupant seating space in a vertical orientation at the most adverse position of the bath seat. The length of the flat bar must be such that it extends beyond the uppermost edge or surface of the bath seat at least as far as the maximum distance D as shown in Figure 1.

(3) Calculate the distance D for a tip-over force to be applied to the aluminum bar using the following formula:

$$D = (20.4 \text{ inch} - H)/2; [(518 \text{ mm} - H)/2]$$

(4) Apply a force of 17.0 lbf. (76.5 N) to the aluminum bar at this distance D above the height H. Apply the force in a horizontal plane and outward from the center of the bath seat over a period of 5 seconds (*see* Figure 1). Maintain this force for an additional 10 seconds. If the bath seat begins to release from the test surface, continue to maintain this force and its orientation relative to the aluminum bar until the bath seat tips over or the 10 second time limit is attained. If necessary, to prevent the bath seat from sliding horizontally on the test surface during this test protocol, the bottom edge of the bath seat may be blocked or wedged to prevent such sliding. However, such blocking should in no way move the fulcrum point of the tip-over to a location that increases the tip-over force.

(5) Repeat this test protocol three additional times at 90 degree increments, including the re-calculation of the distance D.

(6) Repeat this test protocol with the bath seat in each of the use positions recommended by the bath seat's manufacturer.

(b) *Leg openings.* (1) For each of the use positions recommended by the bath seat's manufacturer, insert the tapered end of the Bath Seat Torso Probe (Figure 2) in the most adverse orientation into each opening from the direction of the occupant seating surface. Apply a force of 15 lbf (67 N) in the direction of the major axis of the probe. The force shall be applied gradually within 5 seconds and maintained for an additional 10 seconds.

(2) For each of the use positions recommended by the bath seat's manufacturer, insert the tapered end of the Bath Seat Shoulder Probe (Figure 3) in the most adverse orientation into each opening from the direction of the occupant seating surface. Apply a force of 15 lbf (67 N) in the direction of the major axis of the probe. The force shall be applied gradually within 5 seconds and maintained for an additional 10 seconds. Release the force, leaving the probe in position. Apply a force of 10 lbf (44.4 N) to the highest point on the probe, in a direction vertically

downward toward the seating surface. The force shall be applied gradually within 5 seconds and maintained for an additional 10 seconds.

§ 1514.5 Marking and labeling.

(a) Each bath seat, and the front and back of its packaging, shall be labeled with the safety alert symbol (exclamation mark in an equilateral triangle), the word WARNING, and the following warning:

Proposed Bath Seat Warning Label

⚠ WARNING
Children have drowned while using bath seats.
ALWAYS keep baby within arm's reach.
This bathing aid is NOT a safety device.
Stop using when child is able to pull to a standing position.

(b) The signal word shall be written in capital letters using a sans serif type face with letters not less than 0.2 inches (5 mm) in height, with all the remainder of text not less than 0.1 inch (2.5 mm) in height. The words shall also be in contrasting color to the background on which they are located. The words ''ALWAYS'' and ''NOT'' in the list of warnings shall be capitalized. The word ''drowned'' shall be underlined.

(c) The specified warning label shall be located so that it is visible to the caregiver when the bath seat is in the use position recommended by the manufacturer and the occupant is in the bath seat.

(d) Each bath seat and its packaging shall display a label stating that the bath seat complies with U.S. CPSC Requirements for Bath Seats.

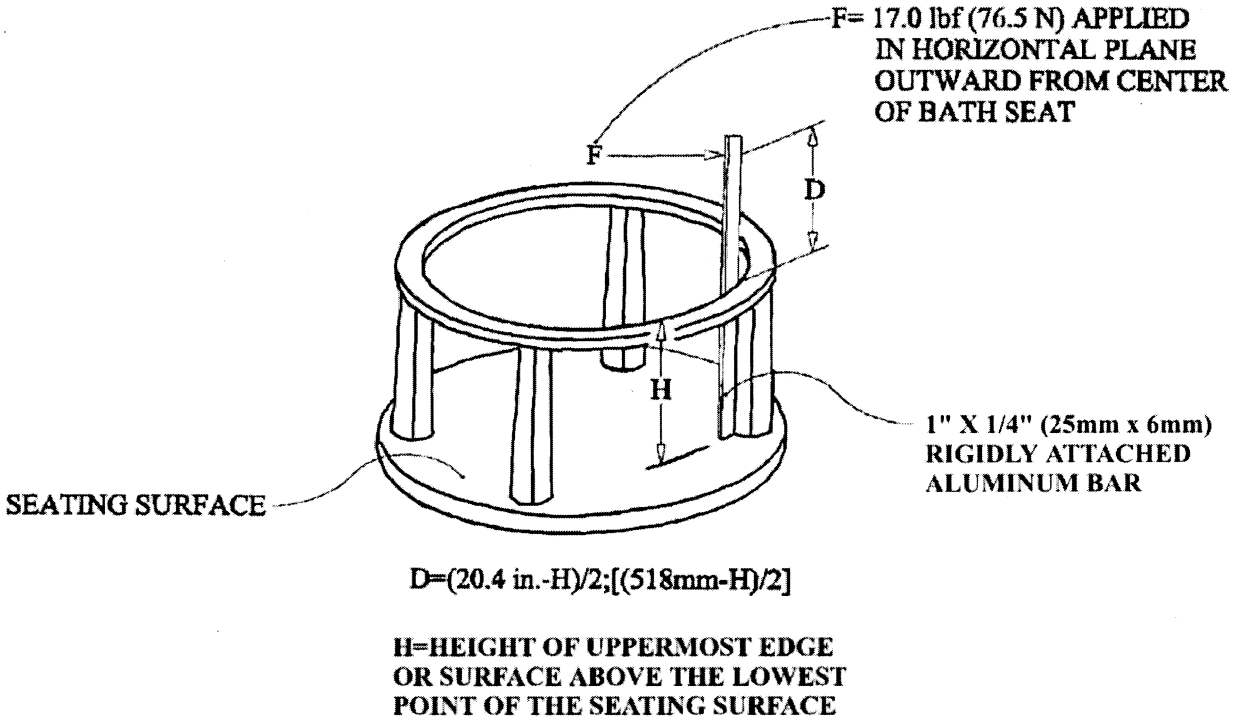

FIG. 1 Diagram of Force Application

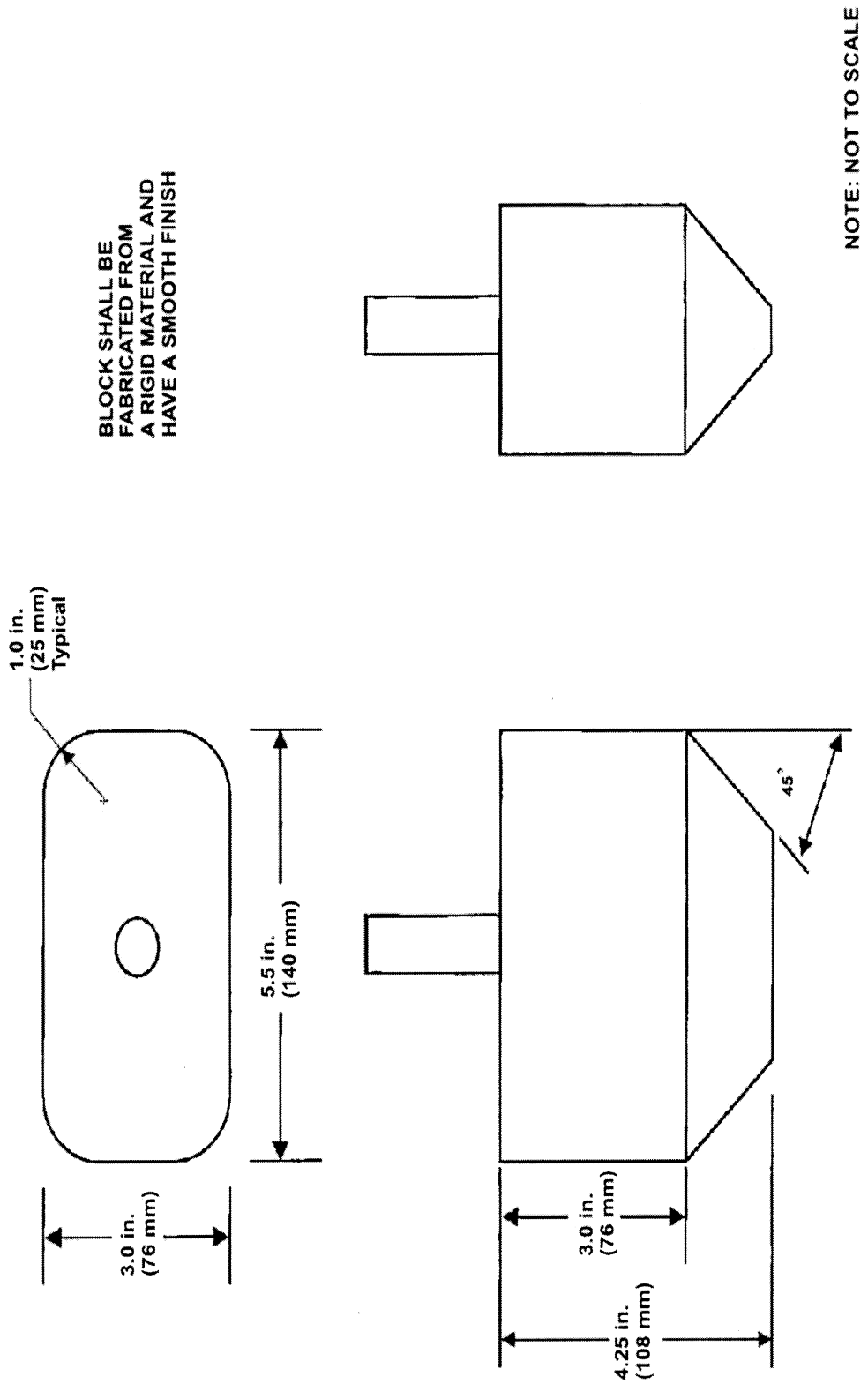

Figure 2. Bath Seat Torso Probe

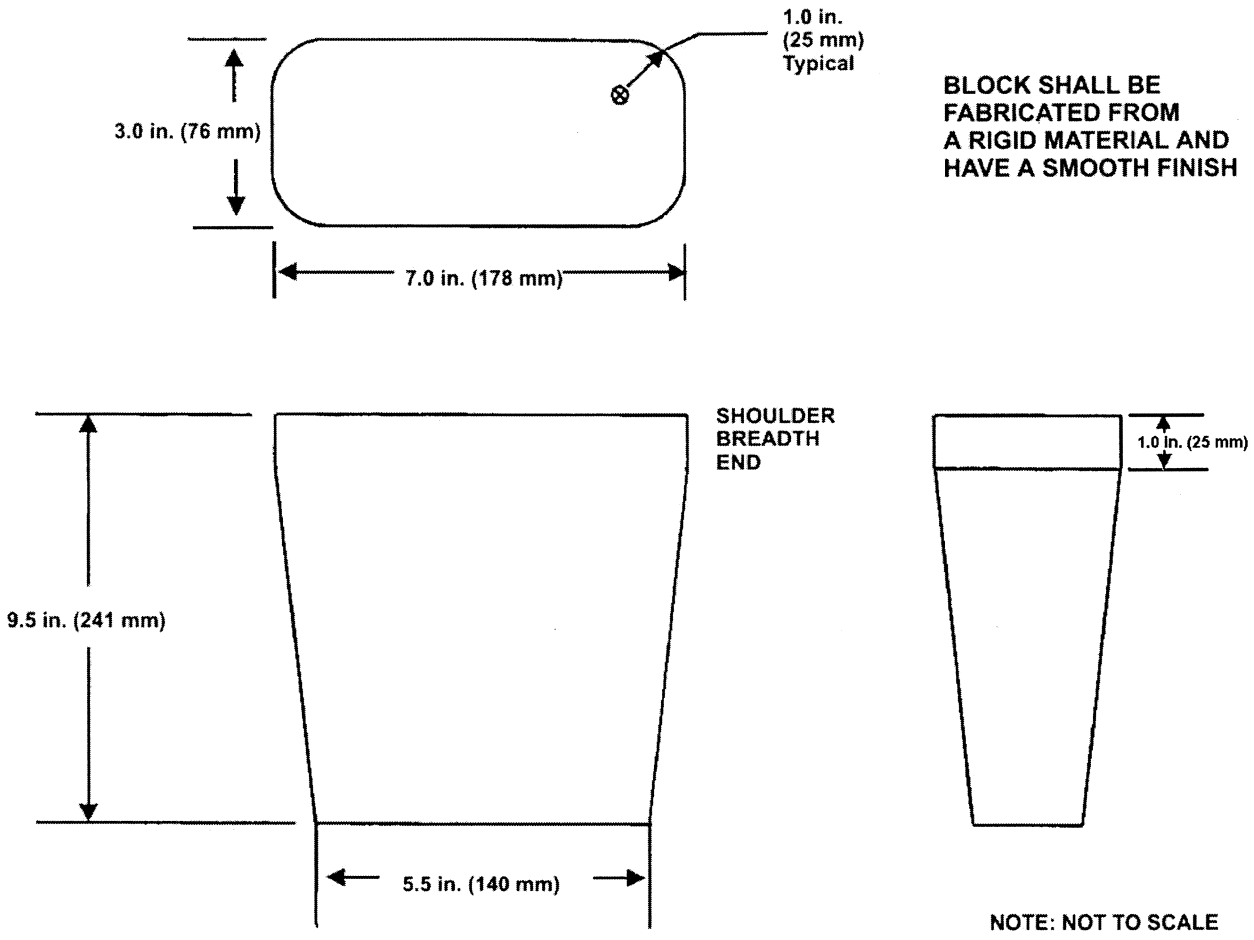

Figure 3. Bath Seat Shoulder Probe

BILLING CODE 6355–01–C

Dated: December 12, 2003.

Todd Stevenson,

Secretary, Consumer Product Safety Commission.

List of Relevant Documents

1. Memorandum from Jacqueline Elder, AED, Office of Hazard Identification and Reduction and Patricia L. Hackett, Project Manager, Directorate for Engineering Sciences, to the Commission, ''Rulemaking Options for Bath Seats—Response to Comments,'' October 7, 2003.

2. Briefing memorandum from Jacqueline Elder, AED, Office of Hazard Identification and Reduction and Patricia L. Hackett, Project Manager, Directorate for Engineering Sciences, to the Commission, ''Rulemaking Options for Bath Seats,'' May 8, 2003.

3. Memorandum from Debra Sweet, Division of Hazard Analysis, to Patricia L. Hackett, Project Manager, Directorate for Engineering Sciences, ''Hazard Analysis Memorandum for Bath Seat NPR Briefing Package,'' April 8, 2003.

4. Memorandum from Caroleene Paul, Directorate for Engineering Sciences, to Patricia L. Hackett, Project Manager, Directorate for Engineering Sciences, ''Draft Proposed Requirements for Bath Seats,'' April 7, 2003.

5. Memorandum from Jonathan Midgett, Ph.D, Division of Human Factors, to Patricia L. Hackett, Project Manager, Directorate for Engineering Sciences, ''Human Factors Issues in Bath Seat Design and Use,'' April 10, 2003.

6. Memorandum from Caroleene Paul, Directorate for Engineering Sciences, to Patricia L. Hackett, Project Manager, Directorate for Engineering Sciences, ''Response to ANPR Comments on Baby Bath Seats,'' January 27, 2003.

7. Memorandum from Jonathan Midgett, Ph.D, Division of Human Factors, to Patricia L. Hackett, Project Manager, Directorate for Engineering Sciences, ''Human Factors Staff Responses to Comments about Bath Seats,'' April 10, 2003.

8. Memorandum from Mary Donaldson, Directorate for Economic Analysis, to Patricia L. Hackett, Project Manager, Directorate for Engineering Sciences, ''Preliminary Regulatory Analysis of Proposed Rule for Baby Bath Seats,'' April 9, 2003.

9. Briefing memorandum from Ronald Medford, Assistant Executive Director, Office of Hazard Identification and Reduction and Celestine Kiss, Project Manager, Division of Human Factors, to the Commission, March 30, 2001.

10. Petition HP 00–4 from the Consumer Federation of America, The Drowning Prevention Foundation, *et al.* to Ban Baby Bath Seats, July 25, 2000.

11. Memorandum from Mary F. Donaldson, Directorate for Economic Analysis, ''Baby Bath Seat Petition, HP–00–4,'' February 16, 2001.

12. Memorandum from Suad W. Nakamura, Ph.D., Physiologist and Sandra E. Inkster, Ph.D., Pharmacologist, Directorate for Health Sciences, ''The Pathophysiology of Drowning,'' December 7, 2000.

13. Memorandum from Debra Sweet, Division of Hazard Analysis, ''Hazard Analysis Memorandum for Bath Seat Petition,'' January 29, 2001.

14. Memorandum from Celestine T. Kiss, Division of Human Factors, ''Human Factors Response to Bath Rings/Seats Petition (HP–00–04),'' January 25, 2001.

15. Memorandum from M. Kumagai, Directorate for Engineering Sciences, ''Review of BATH SEAT ASTM STANDARD

F1967 and Response to Comments to Petition HP 00–4,'' March 2, 2001.

16. Memorandum from M. Kumagai, Directorate for Engineering Sciences, ''Evaluation of Bath Seat Design,'' March 2, 2001.

17. Letter dated May 7, 2001 from Dr. Kimberly Thompson to Chairman Ann Brown re: Comments on Briefing Package Petition No. HP 00–4, Request to Ban Baby Bath Seats.

18. Memorandum dated May 21, 2001 to the Commission from Debra Sweet, Statistician, Division of Hazard Analysis, re: Comments from Kimberly M. Thompson, Sc.D., on Briefing Package for Petition HP 00–4, Request to Ban Baby Bath Seats.

[FR Doc. 03–31135 Filed 12–24–03; 8:45 am]

BILLING CODE 6355–01–P

DEPARTMENT OF JUSTICE

Bureau of Prisons

28 CFR Part 549

[BOP–1088–P]

RIN 1120–AB20

Administrative Safeguards for Psychiatric Treatment and Medication

AGENCY: Bureau of Prisons, Justice.

ACTION: Proposed rule.

SUMMARY: In this document, the Bureau of Prisons (Bureau) amends its regulations on Psychiatric Treatment and Medication. We make several minor word changes to conform more closely with the language of 18 U.S.C. 4241–4247 on psychiatric hospitalization. We remove from the rule two elements of the standard for determining whether treatment or psychotropic medication is necessary because this element is inconsistent with community standards and case law. We also change the rules to conform with statutory authority regarding military prisoners and District of Columbia (DC) Code violators in Bureau custody. Previously, our procedures for involuntary psychiatric treatment and medication did not apply to military prisoners or DC Code violators. Under new statutory authority, military prisoners who are incompetent to stand trial, or who have been found not guilty by reason of lack of mental responsibility may now be committed to the Bureau's custody. Sentenced DC Code offenders may now be involuntarily committed to a Bureau psychiatric hospital. Such military prisoners and DC Code violators are subject to our regulations. We revise the applicability statement accordingly.

DATES: Please submit comments by February 27, 2004.

ADDRESSES: Rules Unit, Office of General Counsel, Bureau of Prisons, 320 First Street, NW., Washington, DC 20534.

FOR FURTHER INFORMATION CONTACT: Sarah Qureshi, Office of General Counsel, Bureau of Prisons, phone (202) 307–2105.

SUPPLEMENTARY INFORMATION: The Bureau amends its regulations on providing psychiatric treatment and medication to inmates. We published a final rule on this subject in the **Federal Register** on September 25, 1995 (60 FR 49444).

The following is a section-by-section analysis of the changes we are making:

Section 549.40 Use of Psychotropic Medications. In this rule, we merely clarify that psychotropic medication is to be used only for a diagnosable psychiatric disorder or *symptoms* for which such medication is accepted treatment. Previously, the rule allowed medication for ''symptomatic behavior.'' The word ''symptoms'' is more accurate medical terminology.

Section 549.41 Voluntary Admission And Psychotropic Medication. In this section, we revise subparagraph (a) to more closely conform with the language of 18 U.S.C. 4241–4247. We change the words ''psychiatric treatment and medication'' to ''psychiatric hospitalization and treatment.'' We also clarify that inmates may be voluntarily admitted for psychiatric hospitalization and treatment when determined necessary by a clinician with hospital-admitting privileges, which is more accurate than the former term ''qualified health personnel.''

Section 549.42 Involuntary Admission. In this section, as in the previous section, we alter the first sentence by changing the words ''psychiatric treatment'' to ''psychiatric hospitalization'' to more closely conform with the language of 18 U.S.C. 4245.

Section 549.43 Involuntary Psychiatric Treatment and Medication. In this section, we revise the second sentence of the introductory paragraph by deleting'', and no further judicial authorization is needed for the admission decision.'' and inserting ''for the involuntary admission.'' The current rule explains that ''[c]ourt commitment for the hospitalization provides the judicial due process hearing.'' The remaining phrase, which states that no further judicial authorization is needed, is redundant and unnecessary. We therefore make this change to streamline and clarify the language of this rule.

In subparagraph (a)(5), we clarify that the psychiatrist conducting a hearing to determine whether treatment or psychotropic medication is necessary will no longer consider whether the inmate is unable to function in the open population of a mental health referral center or a regular prison as a separate basis to justify involuntary administration of medication. We make this change because we found this element to be inconsistent with community standards and applicable case law. *See Cochran* v. *Dysart,* 965 F.2d 649 (8th Cir. 1992).

Also in subparagraph (a)(5), we delete language that allowed the psychiatrist conducting an administration hearing to determine whether psychotropic medication is necessary to make an inmate competent to stand trial. This revision stems from the Supreme Court decision in *Sell* v. *U.S.*, 2003 WL 21372478, decided on June 16, 2003. Under the *Sell* decision, where involuntary treatment is considered solely for the purpose of rendering the defendant competent to stand trial, only the trial court may order involuntary medication after applying the standards set forth by the Court.

Finally, we change subparagraph (c) for the following reasons: Title 18 U.S.C. 4241–4247 and various Federal court decisions required certain due process procedures before involuntary hospitalization or involuntary psychiatric treatment. Under former 18 U.S.C. 4247(j), these due process procedures did not apply to military prisoners or DC Code violators.

However, new 10 U.S.C. 876b provides that military prisoners who are incompetent to stand trial or who have been found not guilty by reason of lack of mental responsibility may be committed to the custody of the Attorney General and that the procedures authorized under 18 U.S.C. 4241(d), 4246, and 4243 apply. Likewise, under new 18 U.S.C. 4247(j), DC Code violators are subject to commitment procedures specified at 18 U.S.C. 4245 and 4246.

Accordingly, we revise the list of exceptions in 28 CFR 549.43(c) to remove the reference to military prisoners and DC Code violators. We also clarified the last sentence of paragraph (c).

Executive Order 12866

This regulation has been drafted and reviewed in accordance with Executive Order 12866, ''Regulatory Planning and Review'', section 1(b), Principles of Regulation. The Director has determined that this rule is not a ''significant regulatory action'' under Executive Order 12866, section 3(f), and accordingly this rule has not been

reviewed by the Office of Management and Budget.

Executive Order 13132

This regulation will not have substantial direct effects on the States, on the relationship between the National government and the States, or on distribution of power and responsibilities among the various levels of government. Therefore, under Executive Order 13132, we determine that this rule does not have sufficient federalism implications to warrant the preparation of a Federalism Assessment.

Regulatory Flexibility Act

The Director, under the Regulatory Flexibility Act (5 U.S.C. 605(b)), reviewed this regulation and by approving it certifies that it will not have a significant economic impact upon a substantial number of small entities for the following reasons: This rule pertains to the correctional management of offenders committed to the custody of the Attorney General or the Director, and its economic impact is limited to the Bureau's appropriated funds.

Unfunded Mandates Reform Act of 1995

This rule will not result in the expenditure by State, local and tribal governments, in the aggregate, or by the private sector, of $100,000,000 or more in any one year, and it will not significantly or uniquely affect small governments. Therefore, no actions were deemed necessary under the provisions of the Unfunded Mandates Reform Act of 1995.

Small Business Regulatory Enforcement Fairness Act of 1996

This rule is not a major rule as defined by section 804 of the Small Business Regulatory Enforcement Fairness Act of 1996. This rule will not result in an annual effect on the economy of $100,000,000 or more; a major increase in costs or prices; or significant adverse effects on competition, employment, investment, productivity, innovation, or on the ability of United States-based companies to compete with foreign-based companies in domestic and export markets.

List of Subjects in 28 CFR Part 549

Prisoners.

Harley G. Lappin,

Director, Bureau of Prisons.

Under the rulemaking authority vested in the Attorney General in 5 U.S.C. 552(a) and delegated to the Director, Bureau of Prisons, we propose to amend 28 CFR part 549 as follows.

SUBCHAPTER C—INSTITUTIONAL MANAGEMENT

PART 549—MEDICAL SERVICES

1. Revise the authority citation for 28 CFR part 549 to read as follows:

Authority: 5 U.S.C. 301; 10 U.S.C. 876b; 18 U.S.C. 3621, 3622, 3524, 4001, 4005, 4042, 4045, 4081, 4082 (Repealed in part as to offenses committed on or after November 1, 1987), 4241–4247, 5006–5024 (Repealed October 12, 1984 as to offenses committed after that date), 5039; 28 U.S.C. 509, 510.

2. Revise § 549.40 to read as follows:

§ 549.40. Use of psychotropic medications.

Psychotropic medication is to be used only for a diagnosable psychiatric disorder or symptoms for which such medication is accepted treatment.

3. Revise § 549.41(a) to read as follows:

§ 549.41 Voluntary admission and psychotropic medication.

(a) A sentenced inmate may be voluntarily admitted for psychiatric hospitalization and treatment when, in the professional judgment of a clinician with hospital-admitting privileges such inmate would benefit from such treatment and demonstrates the ability to give informed consent to such admission. The assessment of the inmate's ability to give informed consent will be documented in the inmate's medical record by qualified health personnel.

* * * * *

§ 549.42 [Amended]

4. Amend § 549.42 by removing the words ''for psychiatric treatment'' from the first sentence and adding in their place the word ''psychiatric'' before the word ''hospitalization'' in the first sentence.

5. Amend § 549.43 as follows:

a. In the second sentence of the introductory paragraph remove '', and no further judicial authorization is needed for the admission decision.'' and add in its place ''for the involuntary admission.''

b. Revise paragraph (a)(5).

c. In the second sentence of paragraph (b), add the words ''or disorder,'' after ''mental illness.''

d. Revise paragraph (c) to read as follows:

§ 549.43 Involuntary psychiatric treatment and medication.

(a) * * *

(5) The psychiatrist conducting the hearing shall determine whether treatment or psychotropic medication is necessary because the inmate is dangerous to self or others, or is gravely disabled. The psychiatrist shall prepare a written report regarding the decision.

* * * * *

(c) Exceptions. Title 18 U.S.C. 4241–4247 do not apply to unsentenced Department of Homeland Security (DHS) detainees, unsentenced prisoners in Bureau custody as a result of a court order (*e.g.,* a civil contemnor), and state or territorial prisoners. For those persons not covered by sections 4241–4247, the decision to involuntarily admit the person to the hospital must be made at an administrative hearing, meeting the requirements of *Vitek* v. *Jones,* 445 U.S. 480 (1980). The decision to provide involuntary treatment, including medication, accordingly is to be made at an administrative hearing in compliance with § 549.43(a).

[FR Doc. 03–31704 Filed 12–24–03; 8:45 am]

BILLING CODE 4410–05–P

DEPARTMENT OF VETERANS AFFAIRS

38 CFR Parts 1 and 2

RIN 2900–AK10

Standards for Collection, Compromise, Suspension, or Termination of Collection Effort, and Referral of Civil Claims for Money or Property; Regional Office Committees on Waivers and Compromises; Salary Offset Provisions; Delegations of Authority

AGENCY: Department of Veterans Affairs.

ACTION: Proposed rule.

SUMMARY: The Department of Veterans Affairs (VA) proposes to revise its current regulations concerning the collection, compromise, suspension, termination, and referral of debts owed to VA. The proposed revision clarifies and simplifies debt collection standards and reflects changes to Federal debt collection procedures under the Debt Collection Improvement Act of 1996. VA also proposes to revise regulations pertaining to the administration of regional office Committees on Waivers and Compromises, as well as a regulation pertaining to delegations of authority to the Assistant Secretary for Management.

DATES: Comments must be received on or before February 27, 2004.

ADDRESSES: Mail or hand deliver written comments to: Director, Regulations Management (00REG1), 810 Vermont Avenue NW., Room 1068, Washington,

DC 20420; or fax comments to (202) 273–9026; or e-mail comments to *OGCRegulations@mail.va.gov.* Comments should indicate that they are submitted in response to ''RIN 2900–AK10.'' All comments received will be available for public inspection in the Office of Regulation Policy and Management, Room 1063B, between the hours of 8 a.m. and 4:30 p.m., Monday through Friday, except holidays. Please call (202) 273–9515 for an appointment.

FOR FURTHER INFORMATION CONTACT: Peter Mulhern, Cash and Debt Management Division (047GC1), Department of Veterans Affairs, 810 Vermont Ave. NW., Washington, DC 20420, (202) 273–5570.

SUPPLEMENTARY INFORMATION: The ''Debt Collection Improvement Act (DCIA) of 1996,'' Pub. L. 104–134, 110 Stat. 1321, 1358 (April 26, 1996) authorizes several new methods for collecting debts and is the most significant legislation for the administrative collection of Federal debt since the Debt Collection Act of 1982, Pub. L. 97–365, 96 Stat. 1749 (October 25, 1982). The DCIA authorizes new debt collection procedures, including centralized administrative offset, the transfer or referral of delinquent debt to the Department of the Treasury (Treasury) or Treasury-designated debt collection centers for collection (cross-servicing), and administrative wage garnishment. Treasury and the Department of Justice (DOJ) subsequently issued revised Federal Claims Collection Standards (FCCS) on November 22, 2000, with an effective date of December 22, 2000. The revised FCCS are found at Title 31 of the Code of Federal Regulations (CFR), chapter IX, parts 900 through 904 and conform with relevant statutory changes to Federal debt collection procedures under the DCIA. Additional rules concerning these new debt collection procedures have also been issued by Treasury at Title 31 of the CFR part 285.

The following major changes were incorporated into the revised FCCS:

1. The Comptroller General was removed as a co-promulgator of the FCCS and the Secretary of the Treasury was added as a co-promulgator.

2. The revised FCCS reflect the elimination of the Comptroller General's role in Federal debt collection.

3. The revised FCCS provides agencies with greater latitude to streamline and customize debt collection procedures to accommodate agency-specific requirements or unique circumstances.

4. The revised FCCS reflects the requirement that agencies use government-wide debt collection contracts for referrals to private collection contractors.

5. The revised FCCS reflects the increase in the maximum principal amount for a claim, from $20,000 to $100,000, agencies are authorized to compromise or to suspend or terminate collection activity thereon, without concurrence by DOJ. In addition, the minimum amount of a claim that may be referred to DOJ for enforced collection is increased from $600 to $2,500.

6. The revised FCCS reflects several new debt collection procedures under the DCIA, including, but not limited to:

(a) Transfer or referral of debt delinquent for more than 180 days to Treasury or Treasury-designated debt collection centers, for collection known as ''cross-servicing;''

(b) Mandatory, centralized administrative offset by disbursing officials; and

(c) Mandatory prohibition against extending federal financial assistance in the form of a loan or loan guarantee to delinquent debtors.

In conjunction with the publication of the Treasury/DOJ FCCS and Treasury's debt collection regulations, VA reviewed its debt collection regulations in order to identify those regulations that required revision or could be deleted as either obsolete or duplicative of Treasury and Treasury/DOJ regulations, as well as to ensure that our regulations are consistent with statutory mandates and that they are clearly written. Consequently, VA has prepared the attached proposed amendments that will remove some debt collection regulations, add new regulations, and revise the remainder.

As part of the revision of our debt collection regulations, VA also proposes to revise its interest-charging regulation. Section 1.919 implements VA's authority to assess interest and administrative costs on debts that arise as a result of participation in a VA benefits, medical care, or home loan program. The authority for this regulation is derived from 38 U.S.C. 5315. The recent review of this regulation indicated that one portion needs to be deleted. Specifically, the current regulation states that when a debtor requests a waiver, interest and administrative costs shall not be assessed until either an initial determination is made on the request or the statutory time limit for requesting waiver has expired. We propose to amend § 1.919 by removing this portion, since it has no basis in 38 U.S.C. 5315. Likewise, there is no such language in the statutory requirement for waiver consideration of VA benefit and home loan program debts (38 U.S.C. 5302). Finally, the FCCS does not contain such a requirement in its government-wide interest regulation (31 CFR 901.9).

VA also is proposing to add two new debt collection regulations. Section 1.923, ''Administrative wage garnishment,'' is another collection tool derived from the DCIA and is written in accordance with Treasury's implementing regulation (31 CFR 285.11). It allows, but does not mandate, VA to request a non-Federal employer to garnish the disposable pay of an individual to collect non-tax delinquent debt owed to VA. VA may do this directly or it may request that Treasury initiate administrative garnishment procedures after VA has referred the debt to Treasury for collection. The other proposed new regulation is § 1.924, ''Barring delinquent debtors from obtaining federal loans or loan insurance or guarantees.'' This is also derived from the DCIA and a Treasury regulation (31 CFR 285.13), as well as the FCCS (31 CFR 901.6). This regulation states that a person owing an outstanding non-tax debt that is in delinquent status shall not be eligible for certain Federal financial assistance.

At the request of the Veterans Benefits Administration, we are proposing to amend § 1.955(c), ''Regional Office Committees on Waivers and Compromises.'' The amendment would continue to state that the administrative control function of the Committees remains with the fiscal officer. However, it would authorize the station director to reassign the function to another station activity when the director determines that another station activity is more appropriate. We believe this amendment would provide each regional office director with needed greater management latitude in assigning responsibility for the administrative control of that station's Committee on Waivers and Compromises.

The Office of Personnel Management has made changes to their government-wide salary offset regulations (5 CFR part 550, Subpart K) in order to comply with the DCIA, which amended 5 U.S.C. 5514. The DCIA requires that all Federal agencies, to which outstanding delinquent debts are owed, must participate in an annual computer match of their delinquent debt records with records of federal employees. In addition, agencies must notify Treasury of all non-tax debts over 180 days delinquent. Treasury will match payments to the debtors from the Federal Government, including federal salary payments, against these debts. Where a match occurs, the payment will be offset to satisfy the debt. We are

proposing to amend VA's regulations to reflect the use of centralized administrative offset, including salary offset.

Our regulations also would be revised to reflect the fact that the DCIA amended 5 U.S.C. 5514 so that pay adjustments made to correct clerical or administrative errors or delays that resulted in overpayments occurring within the four pay periods next preceding the adjustment, are excluded from the normally required notice and hearing procedures. Collection of a debt amounting to $50 or less also would be excluded from such procedures.

Finally, the review of VA regulations also indicated a need to revise § 2.6, which delegates certain debt collection authorities to the Assistant Secretary for Management. Current internal directives redelegate these authorities directly from the Assistant Secretary to field personnel. We are proposing to revise the regulation to correspond to this delegation.

Paperwork Reduction Act

This document contains no provisions constituting a collection of information under the Paperwork Reduction Act (44 U.S.C. 3501–3521).

Unfunded Mandates

The Unfunded Mandates Reform Act requires, at 2 U.S.C. 1532, that agencies prepare an assessment of anticipated costs and benefits before developing any rule that may result in an expenditure by State, local, or tribal governments, in the aggregate, or by the private sector of $100 million or more in any given year. This proposed amendment would have no such effect on State, local, or tribal governments, or the private sector.

Regulatory Flexibility Act

The Secretary hereby certifies that this proposed rule will not have a significant economic impact on a substantial number of small entities as they are defined in the Regulatory Flexibility Act, 5 U.S.C. 601–612. This proposed rule directly affect only individuals indebted to VA, and do not affect small entities. Therefore, pursuant to 5 U.S.C. 605(b), this proposed rule is exempt from the initial and final regulatory flexibility analysis requirements of sections 603 and 604.

Executive Order 12866

This regulatory action has been reviewed by the Office of Management and Budget under Executive Order 12866.

There is no Catalog of Federal Domestic Assistance number.

List of Subjects

38 CFR Part 1

Claims, Administrative practice and procedure, Veterans.

38 CFR Part 2

Delegations of authority.

Approved: September 25, 2003.

Anthony J. Principi,

Secretary of Veterans Affairs.

For the reasons set forth in the preamble, VA proposes to amend 38 CFR part 1 as follows:

PART 1—GENERAL PROVISIONS

1. The authority citation for part 1 continues to read as follows:

Authority: 38 U.S.C. 501(a), unless otherwise noted.

2. The authority citation preceding § 1.900 is revised to read as follows:

Authority: Sections 1.900 through 1.953 are issued under the authority of 31 U.S.C. 3711 through 3720E; 38 U.S.C. 501, unless otherwise stated.

3. Section 1.900 is revised to read as follows:

§ 1.900 Prescription of standards.

(a) The standards contained in §§ 1.900 through 1.953 are issued pursuant to the Federal Claims Collection Standards, issued by the Department of the Treasury and the Department of Justice (DOJ) in parts 900 through 904 of 31 CFR, as well as other debt collection authority issued by Treasury in part 285 of 31 CFR 1.900 through 1.953, and apply to the collection, compromise, termination, and suspension of debts owed to VA, and the referral of such debts to Treasury (or other Federal agencies designated by Treasury) for offset and collection action and to DOJ for litigation, unless otherwise stated in this part or in other statutory or regulatory authority, or by contract.

(b) Standards and policies regarding the classification of debt for accounting purposes (for example, write-off of uncollectible debt) are contained in the Office of Management and Budget's Circular A–129 (Revised), ''Policies for Federal Credit Programs and Non-Tax Receivables.''

4. Section 1.901 is revised to read as follows:

§ 1.901 No private rights created.

Sections 1.900 through 1.953 do not create any right or benefit, substantive or procedural, enforceable at law or in equity by a party against the United States, its agencies, its officers, or any other person, nor shall the failure of VA to comply with any of the provisions of §§ 1.900 through 1.953 be available to any debtor as a defense.

5. Section 1.902 is revised to read as follows:

§ 1.902 Antitrust, fraud, and tax and interagency claims.

(a) The standards in §§ 1.900 through 1.953 relating to compromise, suspension, and termination of collection activity do not apply to any debt based in whole or in part on conduct in violation of the antitrust laws or to any debt involving fraud, the presentation of a false claim, or misrepresentation on the part of the debtor or any party having an interest in the claim. Only DOJ has the authority to compromise, suspend, or terminate collection activity on such claims. The standards in §§ 1.900 through 1.953 relating to the administrative collection of claims do apply, but only to the extent authorized by DOJ in a particular case. Upon identification of a claim based in whole or in part on conduct in violation of the antitrust laws or any claim involving fraud, the presentation of a false claim, or misrepresentation on the part of the debtor or any party having an interest in the claim, VA shall promptly refer the case to DOJ. At its discretion, DOJ may return the claim to VA for further handling in accordance with the standards in §§ 1.900 through 1.953.

(b) Sections 1.900 through 1.953 do not apply to tax debts.

(c) Sections 1.900 through 1.953 do not apply to claims between Federal agencies.

(d) Federal agencies should attempt to resolve interagency claims by negotiation in accordance with Executive Order 12146 (3 CFR, 1980 Comp., pp. 409–412).

6. Section 1.903 is revised to read as follows:

§ 1.903 Settlement, waiver, or compromise under other statutory or regulatory authority.

Nothing in §§ 1.900 through 1.953 precludes VA settlement, waiver, compromise, or other disposition of any claim under statutes and implementing regulations other than subchapter II of chapter 37 of Title 31 of the United States Code (Claims of the United States Government) and the standards in Title 31 CFR, parts 900 through 904. See, for example, the Federal Medical Care Recovery Act (42 U.S.C. 2651 *et seq.*) and applicable regulations, 28 CFR, part 43. In such cases, the laws and regulations that are specifically applicable to claims collection activities of VA generally take precedence over 31 CFR, parts 900 through 904.

7. Section 1.904 is revised to read as follows:

§ 1.904 Form of payment.

Claims may be paid in the form of money or, when a contractual basis exists, VA may demand the return of specific property or the performance of specific services.

8. Section 1.905 is revised to read as follows:

§ 1.905 Subdivision of claims not authorized.

Debts may not be subdivided to avoid the monetary ceiling established by 31 U.S.C. 3711(a)(2). A debtor's liability arising from a particular transaction or contract shall be considered as a single debt in determining whether the debt is one of less than $100,000 (excluding interest, penalties, and administrative costs) or such higher amount as the Attorney General shall from time to time prescribe for purposes of compromise, suspension, or termination of collection activity.

9. Section 1.906 is revised to read as follows:

§ 1.906 Required administrative proceedings.

(a) In applying §§ 1.900 through 1.953, VA is not required to omit, foreclose, or duplicate administrative proceedings required by contract or other laws or regulations.

(b) Nothing contained in §§ 1.900 through 1.953 is intended to foreclose the right of any debtor to an administrative proceeding, including appeals, waivers, and hearings provided by statute, contract, or VA regulation (*See* 38 U.S.C. 3720(a)(4) and 5302 and 42 U.S.C. 2651–2653).

10. Section 1.907 is revised to read as follows:

§ 1.907 Definitions.

(a) The definitions found in the Federal Claims Collection Standards issued in § 900.2 of Title 31 of the CFR shall apply to §§ 1.900 through 1.953.

(b) As used in §§ 1.900 through 1.953, *referral for litigation* means referral to the Department of Justice for appropriate legal action, except in those specified instances where a case is referred to VA Regional Counsels for legal action.

(c) As used in §§ 1.900 through 1.953, *VA benefit program* means medical care, home loan, and benefits payment programs administered by VA under Title 38 of the United States Code, unless stated otherwise.

(Authority: 31 U.S.C. 3701, 3711 and 38 U.S.C. 5316)

11. The authority citation preceding § 1.910 is removed.

12. Section 1.910 is revised to read as follows:

§ 1.910 Aggressive collection action.

(a) VA will take aggressive collection action on a timely basis, with effective follow-up, to collect all claims for money or property arising from its activities.

(b) In accordance with 31 U.S.C. 3711(g) and the procedures set forth at 31 CFR 285.12, VA shall transfer to Treasury any non-tax debt or claim that has been delinquent for a period of 180 days or more so that Treasury may take appropriate action to collect the debt or terminate collection action. This requirement does not apply to any debt that:

(1) Is in litigation or foreclosure;

(2) Will be disposed of under an approved asset sale program;

(3) Has been referred to a private collection contractor for a period of time acceptable to the Secretary of the Treasury;

(4) Is at a debt collection center for a period of time acceptable to the Secretary of the Treasury;

(5) Will be collected under internal offset procedures within 3 years after the debt first became delinquent; or

(6) Is exempt from this requirement based on a determination by the Secretary of the Treasury that exemption for a certain class of debt is in the best interest of the United States. VA may request that the Secretary exempt specific classes of debts.

(c) In accordance with 31 U.S.C. 3716(c)(6) and the procedures set forth in 31 CFR part 285, VA shall notify Treasury of all past due, legally enforceable non-tax debt that is over 180 days delinquent for purposes of administrative offset, including tax refund offset and federal salary offset. Procedures for referral to Treasury for tax refund offset are found at 31 CFR 285.2 and procedures for referral to Treasury for federal salary offset are found at 38 CFR 1.995 and 31 CFR 285.7.

13. Section 1.911 is amended by:

A. Revising paragraphs (a) and (b).

B. Revising paragraphs (c)(3), (d)(4) and (d)(5).

C. Adding paragraphs (d)(6) and (d)(7).

D. Revising paragraphs (f)(1) and (f)(5).

The revisions and addition read as follows:

§ 1.911 Collection of debts owed by reason of participation in a benefits program.

(a) *Scope.* This section applies to the collection of debts resulting from an individual's participation in a VA benefit or home loan program. It does not apply to VA's other debt collection activities. Standards for the demand for payment of all other debts owed to VA are set forth in § 1.911a. School liability debts are governed by § 21.4009 of this title.

(b) *Written demands.* When VA has determined that a debt exists by reason of an administrative decision or by operation of law, VA shall promptly demand, in writing, payment of the debt. VA shall notify the debtor of his or her rights and remedies and the consequences of failure to cooperate with collection efforts. Generally, one demand letter is sufficient, but subsequent demand letters may be issued as needed.

(c) * * *

* * * * *

(3) *Appeal.* In accordance with parts 19 and 20 of this title, the debtor may appeal the decision underlying the debt.

(d) * * *

* * * * *

(4) That collection may be made by offset from current or future VA benefit payments (*see* § 1.912a). In addition, the debtor should be advised of any policies with respect to the use of credit bureaus, debt collection centers, and collection agencies; any other remedies to enforce payment of the debt, including administrative wage garnishment, Federal salary offset, tax refund offset, and litigation; and the requirement that any debt delinquent for more than 180 days be transferred to Treasury for administrative offset or collection.

(5) That interest and administrative costs may be assessed in accordance with § 1.915, as appropriate;

(6) That the debtor shall have the opportunity to inspect and copy records; and

(7) That the debtor shall have the opportunity to enter into a repayment agreement.

* * * * *

(f) * * *

(1) Appellate rights, in parts 19 and 20 of this title;

* * * * *

(5) The assessment of interest and administrative costs, in § 1.915.

* * * * *

14. Section 1.911a is added to read as follows:

§ 1.911a Collection of non-benefit debts.

(a) This section is written in accordance with 31 CFR 901.2 and applies to the demand for payment of all debts, except those debts arising out of participation in a VA benefit or home loan program. Procedures for the

demand for payment of VA benefit or home loan program debts are set forth in § 1.911.

(b) Written demand as described in paragraph (c) of this section shall be made promptly upon a debtor of VA in terms that inform the debtor of the consequences of failing to cooperate with VA to resolve the debt. Generally, one demand letter is sufficient, but subsequent letters may be issued as needed. In determining the timing of the demand letter, VA should give due regard to the need to refer debts promptly to DOJ for litigation, in accordance with §§ 1.950 through 1.953. When necessary to protect VA's interest (for example, to prevent the running of a statute of limitations), written demand may be preceded by other appropriate actions under 38 CFR 1.900 through 1.953, including immediate referral for litigation.

(c) The written demand letter shall inform the debtor of:

(1) The basis for the indebtedness and any rights the debtor may have to seek review within VA, including the right to request waiver;

(2) The applicable standards for imposing any interest or other late payment charges;

(3) The date by which payment should be made to avoid interest and other late payment charges and enforced collection, which generally should not be more than 30 days from the date that the demand letter is mailed;

(4) The name, address, and phone number of a contact person or office within the agency;

(5) The opportunity to inspect and copy VA records related to the debt; and

(6) The opportunity to make a written agreement to repay the debt.

(d) In addition to the items listed in paragraph (c) of this section, VA should include in the demand letter such items as VA's willingness to discuss alternative methods of payment and its policies with respect to the use of credit bureaus, debt collection centers, and collection agencies. The letter should also indicate the agency's remedies to enforce payment of the debt (including assessment of interest, administrative costs and penalties, administrative garnishment, Federal salary offset, tax refund offset, administrative offset, and litigation) and the requirement that any debt delinquent for more than 180 days be transferred to Treasury for collection.

(e) VA should respond promptly to communications from debtors and should advise debtors who dispute debts, or request waiver, to furnish available evidence to support their contentions.

(f) Prior to referring a debt for litigation, VA should advise each person determined to be liable for the debt that, unless the debt can be collected administratively, litigation may be initiated. This notification may be given as part of a demand letter under paragraph (c) of this section or in a separate letter.

(g) When VA learns that a bankruptcy petition has been filed with respect to a debtor, before proceeding with further collection action, VA should immediately seek legal advice from either VA General Counsel or Regional Counsel concerning the impact of the Bankruptcy Code on any pending or contemplated collection activities. Unless VA determines that the automatic stay imposed at the time of filing pursuant to 11 U.S.C. 362 has been lifted or is no longer in effect, in most cases collection activity against the debtor should stop immediately.

(1) After seeking legal advice, a proof of claim should be filed in most cases with the bankruptcy court or the Trustee. VA should refer to the provisions of 11 U.S.C. 106 relating to the consequences on sovereign immunity of filing a proof of claim.

(2) If VA is a secured creditor, it may seek relief from the automatic stay regarding its security, subject to the provisions and requirements of 11 U.S.C. 362.

(3) Offset is prohibited in most cases by the automatic stay. However, VA should seek legal advice from VA's General Counsel or Regional Counsel to determine whether payments to the debtor and payments of other agencies available for offset may be frozen by VA until relief from the automatic stay can be obtained from the bankruptcy court. VA also should seek legal advice from VA's General Counsel or Regional Counsel to determine whether recoupment is available.

15. Section 1.912 is amended by:

A. Revising paragraphs (a), (c)(2), (d)(1), (d)(2), and (f).

B. Adding paragraphs (d)(3), (d)(4), (g), (h), and (i).

The additions and revisions read as follows:

§ 1.912 Collection by offset.

(a) *Authority and scope.* In accordance with the procedures set forth in 31 CFR 901.3, as well as 31 CFR, part 285, VA shall collect debts by administrative offset from payments made by VA to an individual indebted to VA. Also in accordance with 31 CFR 901.3(b), as well as 31 CFR part 285, VA shall refer past due, legally enforceable non-tax debts which are over 180 days delinquent to Treasury for collection by centralized administrative offset (further procedures are set forth in paragraph (g) of this section). This section does not pertain to offset from either VA benefit payments or from current salary, but does apply to offset from all other VA payments, including an employee's final salary check and lump-sum leave payment. Procedures for offset from benefit payments are found in § 1.912a. Procedures for offset from current Federal salary are found in §§ 1.980 through 1.995. NOTE: VA cannot offset, or refer for the purpose of offset, either under the authority of this section or under any other authority found in §§ 1.900 through 1.953 and §§ 1.980 through 1.995, any VA home loan program debt described in 38 U.S.C. 3726 unless the requirements set forth in that section have been met.

* * * * *

(c) * * *

(2) If the debtor, within 30 days of the date of the required notification by VA, requests in writing the waiver of collection of the debt in accordance with § 1.963, § 1.963a, or § 1.964, offset shall not commence until VA has made an initial decision to deny the waiver request.

* * * * *

(d) * * *

(1) Offset may commence prior to either resolution of a dispute or decision on a waiver request as discussed in paragraph (c) of this section, if collection of the debt would be jeopardized by deferral of offset (for example, if VA first learns of the debt when there is insufficient time before a final payment would be made to the debtor to allow for prior notice and opportunity for review or waiver consideration). In such a case, notification pursuant to paragraph (b) of this section shall be made at the time offset begins or as soon thereafter as possible. VA shall promptly refund any money that has been collected that is ultimately found not to have been owed to the Government.

(2) If the United States has obtained a judgment against the debtor, offset may commence without the notification required by paragraph (b) of this section. However, a waiver request filed in accordance with the time limits and other requirements of § 1.963, § 1.963a, or § 1.964 will be considered, even if filed after a judgment has been obtained against the debtor. If waiver is granted, in whole or in part, refund of amounts already collected will be made in accordance with § 1.967.

(3) The procedures set forth in paragraph (b) of this section may be omitted when the debt arises under a

contract that provides for notice and other procedural protections.

(4) Offset may commence without the notification required by paragraph (b) of this section when the offset is in the nature of a recoupment. As defined in 31 CFR 900.2(d), recoupment is a special method for adjusting debts arising under the same transaction or occurrence.

* * * * *

(f) When collecting multiple debts by administrative offset, VA shall apply the recovered amounts to those debts in accordance with the best interests of the United States, as determined by the facts and circumstances of the particular case, paying special attention to applicable statutes of limitation. In accordance with 31 CFR 901.3(a)(4), VA may not initiate offset to collect a debt more than 10 years after VA's right to collect the debt first accrued (with certain exceptions as specified in § 901.3(a)(4)).

(g) When VA refers delinquent debts to Treasury for centralized administrative offset in accordance with 31 CFR part 285, VA must certify that:

(1) The debts are past due and legally enforceable; and

(2) VA has complied with all due process requirements under 31 U.S.C. 3716(a) and paragraphs (b) and (c) of this section. Payments that are prohibited by law from being offset are exempt from centralized administrative offset.

(h) In accordance with 31 U.S.C. 3716(f), the Secretary of the Treasury may waive the provisions of the Computer Matching and Privacy Protection Act of 1988 concerning matching agreements and post-match notification and verification (5 U.S.C. 552a(o) and (p)) for centralized administrative offset upon receipt of a certification from a creditor agency that the due process requirements enumerated in 31 U.S.C. 3716(a) and paragraphs (b) and (c) of this section have been met. The certification of a debt in accordance with paragraph (g) of this section will satisfy this requirement. If such a waiver is granted, only the Data Integrity Board of the Department of the Treasury is required to oversee any matching activities, in accordance with 31 U.S.C. 3716(g).

(i)(1) Unless the offset would not be in VA's best interest, or would otherwise be contrary to law, VA will comply with requests by creditor agencies to offset VA payments (except for current salary or benefit payments) made to a person indebted to the creditor agency. However, before VA may initiate offset, the creditor agency must certify in writing to VA that the debtor has been provided:

(i) Written notice of the type and amount of the debt and the intent of the creditor agency to use administrative offset to collect the debt;

(ii) The opportunity to inspect and copy agency records related to the debt;

(iii) The opportunity for review within the agency of the determination of the indebtedness; and,

(iv) The opportunity to make a written agreement to repay the debt.

(2) Procedures for current salary offset are set forth at §§ 1.980–1.995. Procedures for offset of VA benefit payments are set forth at § 1.912a.

16. Section 1.912a is amended by adding paragraph (c)(4) to read as follows:

§ 1.912a Collection by offset—from VA benefit payments.

* * * * *

(c) * * *

(4) VA will pursue collection action once an adverse initial decision is reached on the debtor's request for waiver and/or the debtor's informal dispute (as described in § 1.911a(c)(1)) concerning the existence or amount of the debt, even if the debtor subsequently pursues appellate relief in accordance with parts 19 and 20 of this title.

* * * * *

§ 1.913 [Removed]

§ 1.914 [Removed]

§ 1.915 [Removed]

17. Sections 1.913, 1.914, and 1.915 are removed.

§ 1.916 [Redesignated as § 1.913]

18. Section 1.916 is redesignated as § 1.913 and is revised to read as follows:

§ 1.913 Liquidation of collateral.

(a) VA should liquidate security or collateral through the exercise of a power of sale in the security instrument or a nonjudicial foreclosure, and apply the proceeds to the applicable debt, if the debtor fails to pay the debt within 180 days after demand and if such action is in the best interest of the United States. Collection from other sources, including liquidation of security or collateral, is not a prerequisite to requiring payment by a surety, insurer, or guarantor, unless such action is expressly required by statute or contract.

(b) When VA learns that a bankruptcy petition has been filed with respect to a debtor, VA should seek legal advice from the VA General Counsel or Regional Counsel concerning the impact of the Bankruptcy Code, including, but not limited to, 11 U.S.C. 362, to determine the applicability of the automatic stay and the procedures for obtaining relief from such stay prior to proceeding under paragraph (a) of this section.

§ 1.917 [Redesignated as § 1.914]

19. Section 1.917 is redesignated as § 1.914 and is revised to read as follows:

§ 1.914 Collection in installments.

(a) Whenever feasible, VA shall collect the total amount of a debt in one lump sum. If a debtor is financially unable to pay a debt in one lump sum, VA may accept payment in regular installments. VA should obtain financial statements from debtors who represent that they are unable to pay in one lump sum and independently verify such representations whenever possible. If VA agrees to accept payments in regular installments, VA should obtain a legally enforceable written agreement from the debtor that specifies all of the terms of the arrangement and contains a provision accelerating the debt in the event of default.

(b) The size and frequency of installment payments should bear a reasonable relation to the size of the debt and the debtor's ability to pay. If possible, the installment payments should be sufficient in size and frequency to liquidate the debt in 3 years or less.

(c) Security for deferred payments should be obtained in appropriate cases. However, VA may accept installment payments if the debtor refuses to execute a written agreement or to give security.

§ 1.918 [Removed]

20. Section 1.918 is removed.

§ 1.919 [Redesignated as § 1.915]

21. Section 1.919 is redesignated as § 1.915 and is amended by:

A. Revising the heading and paragraphs (a) and (c).

B. In paragraph (d), removing ''§ 1.919'' and adding, in its place, ''this section''.

C. Removing paragraphs (f)(2)(i) and (ii).

D. Revising paragraph (g).

The revisions read as follows:

§ 1.915 Interest, administrative costs, and penalties.

(a) Except as otherwise provided by statute, contract, or other regulation to the contrary, and subject to 38 U.S.C. 3485(e) and 5302, VA shall assess:

(1) Interest on all indebtedness to the United States arising out of participation in a VA benefit, medical

care, or home loan program under authority of Title 38, U.S. Code.

(2) Interest and administrative costs of collection on such debts described in paragraph (a)(1) of this section where repayment has become delinquent (as defined in 31 CFR 900.2(b)), and

(3) Interest, administrative costs, and penalties in accordance with 31 CFR 901.9 on all debts other than those described in paragraph (a)(1) of this section.

* * * * *

(c) The rate of interest charged by VA shall be based on the rate established annually by the Secretary of the Treasury in accordance with 31 U.S.C. 3717 and shall be adjusted annually by VA on the first day of the calendar year. Once the rate of interest has been determined for a particular debt, the rate shall remain in effect throughout the duration of repayment of that debt. When a debtor defaults on a repayment agreement and seeks to enter into a new agreement, VA may require payment of interest at a new rate that reflects the current value of funds to the Treasury at the time the new agreement is executed. Interest shall not be compounded, that is, interest shall not be charged on accrued interest and administrative costs required by this section. If, however, a debtor defaults on a previous repayment agreement, interest and administrative costs that accrued but were not collected under the defaulted agreement shall be added to the principal under the new agreement.

* * * * *

(g) Administrative costs assessed under this section shall be the average costs of collection of similar debts, or actual collection costs as may be accurately determined in the particular case. No administrative costs of collection will be assessed under this section in any cases where the indebtedness is paid in full prior to the 30-day period specified in paragraph (e) of this section, or in any case where a repayment plan is proposed by the debtor and accepted by VA within that 30-day period, unless such repayment agreement becomes delinquent (as defined in 31 CFR 900.2(b)).

§ 1.920 [Removed]

22. Section 1.920 is removed.

§ 1.921 [Removed]

23. Section 1.921 is removed.

§ 1.922 [Redesignated as § 1.916]

24. Section 1.922 is redesignated as § 1.916 and is amended by:

A. Revising paragraph (d)(2)(i).

B. Revising the authority citation at the end of the section.

The revision reads as follows:

§ 1.916 Disclosure of debt information to consumer reporting agencies (CRA).

* * * * *

(d) * * *

(2)(i) In accordance with § 1.911 and § 1.911a, VA shall notify each individual of the right to dispute the existence and amount of the debt and to request a waiver of the debt, if applicable.

* * * * *

(Authority: 38 U.S.C. 5701(g), (i); 31 U.S.C. 3711(e))

§ 1.923 [Redesignated as § 1.917]

25. Section 1.923 is redesignated as § 1.917 and is amended by:

A. Revising paragraph (b) introductory text.

B. Adding paragraphs (c) through (e).

The revision and additions read as follows:

§ 1.917 Contracting for collection services.

* * * * *

(b) In accordance with 31 U.S.C. 3718(d), or as otherwise permitted by law, collection service contracts may be funded in the following manner:

* * * * *

(c) VA shall use government-wide debt collection contracts to obtain debt collection services provided by private collection contractors. However, VA may refer debts to private collection contractors pursuant to a contract between VA and a private collection contractor only if such debts are not subject to the requirement to transfer debts to Treasury for debt collection. *See* 31 U.S.C. 3711(g); 31 CFR 285.12(e), and 38 CFR 1.910.

(d) VA may enter into contracts for locating and recovering assets of the United States, such as unclaimed assets.

(e) VA may enter into contracts for debtor asset and income search reports. In accordance with 31 U.S.C. 3718(d), such contracts may provide that the fee a contractor charges the agency for such services may be payable from the amounts recovered, unless otherwise prohibited by statute.

(Authority: 31 U.S.C. 3718)

§ 1.924 [Redesignated as § 1.918]

26. Section 1.924 is redesignated as § 1.918 and is amended by revising paragraphs (a) and (b) to read as follows:

§ 1.918 Use and disclosure of mailing addresses.

(a) When attempting to locate a debtor in order to compromise or collect a debt in accordance with §§ 1.900 through 1.953, VA may send a request to the Secretary of the Treasury, or his/her designee, in order to obtain the debtor's most current mailing address from the records of the Internal Revenue Service.

(b) VA is authorized to use mailing addresses obtained under paragraph (a) of this section to enforce collection of a delinquent debt and may disclose such mailing addresses to other agencies and to collection agencies for collection purposes.

* * * * *

§ 1.925 [Redesignated as § 1.919]

27. Section 1.925 is redesignated as § 1.919 and is amended by revising paragraphs (a) and (b)(3) to read as follows:

§ 1.919 Administrative offset against amounts payable from Civil Service Retirement and Disability Fund, Federal Employees Retirement System (FERS), final salary check, and lump sum leave payments.

(a) Unless otherwise prohibited by law or regulation, and in accordance with 31 CFR 901.3(d), VA may request that money which is due and payable to a debtor from either the Civil Service Retirement and Disability Fund or FERS be administratively offset in reasonable amounts in order to collect, in one full payment or a minimal number of payments, debts that are owed to VA by the debtor. Such requests shall be made to the appropriate officials at the Office of Personnel Management (OPM) in accordance with such regulations prescribed by the Director of OPM. (*See* 5 CFR 831.1801 through 831.1808). In addition, VA may also offset against a Federal employee's final salary check and lump sum leave payment, unless such offset represents continuation of an offset against current salary initiated in accordance with §§ 1.980 through 1.995. *See* § 1.912 for procedures for offset against a final salary check and lump sum leave payment.

(b) * * *

(3) VA has complied with §§ 1.911, 1.911a, 1.912, 1.912a, or 31 CFR § 901.3, including any required hearing or review.

* * * * *

§ 1.926 [Redesignated as § 1.920]

28. Section 1.926 is redesignated as § 1.920 and amended by:

A. Revising paragraph (a).

B. Revising paragraph (c)(6).

C. Revising paragraph (e).

The revisions read as follows:

§ 1.920 Referral of VA debts.

(a) When authorized, VA may refer an uncollectible debt to another Federal or

State agency for the purpose of collection action. Collection action may include the offsetting of the debt from any current or future payment, except salary (*see* paragraph (e) of this section), made by such Federal or State agency to the person indebted to VA.

* * * * *

(c) * * *

(6) Other applicable notices required by §§ 1.911, 1.911a, 1.912, and 1.912a.

* * * * *

(e) The referral by VA of a VA debt to another agency for the purpose of salary offset shall be done in accordance with 38 CFR 1.980 through 1.995 and regulations prescribed by the Director of the Office of Personnel Management (OPM) in 5 CFR part 550, subpart K.

* * * * *

§ 1.927 [Redesignated as § 1.921]

29. Section 1.927 is redesignated as § 1.921 and is revised to read as follows:

§ 1.921 Analysis of costs.

VA collection procedures should provide for periodic comparison of costs incurred and amounts collected. Data on costs and corresponding recovery rates for debts of different types and in various dollar ranges should be used to compare the cost effectiveness of alternative collection techniques, establish guidelines with respect to points at which costs of further collection efforts are likely to exceed recoveries, assist in evaluating offers in compromise, and establish minimum debt amounts below which collection efforts need not be taken.

§ 1.928 [Redesignated as § 1.922]

30. Section 1.928 is redesignated as § 1.922 and is revised to read as follows:

§ 1.922 Exemptions.

(a) Sections 1.900 through 1.953, to the extent they reflect remedies or procedures prescribed by the Debt Collection Act of 1982 and the Debt Collection Improvement Act of 1996, such as administrative offset, use of credit bureaus, contracting for collection agencies, and interest and related charges, do not apply to debts arising under, or payments made under, the Internal Revenue Code of 1986, as amended (26 U.S.C. 1 *et seq.*); the Social Security Act (42 U.S.C. 301 *et seq.*), except to the extent provided under 42 U.S.C. 404 and 31 U.S.C. 3716(c); or the tariff laws of the United States. These remedies and procedures, however, may be authorized with respect to debts that are exempt from the Debt Collection Act of 1982 and the DCIA of 1996, to the extent that they are authorized under some other statute or the common law.

(b) This section should not be construed as prohibiting the use of §§ 1.900 through 1.953 when collecting debts owed by persons employed by agencies administering the laws cited in paragraph (a) of this section unless the debt arose under those laws.

(Authority: 31 U.S.C. 3711)

31. Section 1.923 is added to read as follows:

§ 1.923 Administrative wage garnishment.

(a) In accordance with the procedures set forth in 31 U.S.C. 3720D and 31 CFR 285.11, VA or Treasury may request that a non-Federal employer garnish the disposable pay of an individual to collect delinquent non-tax debt owed to VA. VA may pursue wage garnishment independently in accordance with this section or garnishment may be pursued after VA refers a debt to Treasury in accordance with 31 CFR 285.12 or with § 1.910 of this title. For the purposes of this section, any reference to Treasury also includes any private collection agency under contract to Treasury.

(b) At least 30 days prior to the initiation of garnishment proceedings, VA or Treasury shall send a written notice, as described in 31 CFR 285.11(e), by first class mail to the debtor's last known address. This notice shall inform the debtor of:

(1) The nature and amount of the debt;

(2) The intention of VA or Treasury to initiate proceedings to collect the debt through deductions from the debtor's pay until the debt and all accumulated interest, and other late payment charges, are paid in full, and;

(3) An explanation of the debtor's rights, including the opportunity:

(i) To inspect and copy VA records pertaining to the debt;

(ii) To enter into a written repayment agreement with VA or Treasury under terms agreeable to VA or Treasury, and;

(iii) To request a hearing in accordance with 31 CFR 285.11(f) and paragraph (c) of this section concerning the existence or amount of the debt or the terms of the proposed repayment schedule under the garnishment order. However, the debtor is not entitled to a hearing concerning the terms of the proposed repayment schedule if these terms have been established by written agreement under paragraph (b)(3)(ii) of this section.

(c) Any hearing conducted as part of the administrative wage garnishment process shall be conducted by the designated hearing official in accordance with the procedures set forth in 31 CFR 285.11(f). This hearing official may be any VA Board of Contract Appeals Administrative Judge or Hearing Examiner, or any other VA hearing official. This hearing official may also conduct administrative wage garnishment hearings for other Federal agencies.

(1) The hearing may be oral or written as determined by the designated hearing official. The hearing official shall provide the debtor with a reasonable opportunity for an oral hearing when the hearing official determines that the issue in dispute cannot be resolved by review of documentary evidence. The hearing official shall establish the time and place of any oral hearing. At the debtor's option, an oral hearing may be conducted either in person or by telephone conference call. A hearing is not required to be a formal, evidentiary-type hearing, but witnesses who testify in oral hearings must do so under oath or affirmation. While it is not necessary to produce a transcript of the hearing, the hearing official must maintain a summary record of the proceedings. All travel expenses incurred by the debtor in connection with an in-person hearing shall be borne by the debtor. VA or Treasury shall be responsible for all telephone expenses. In the absence of good cause shown, a debtor who fails to appear at a hearing will be deemed as not having timely filed a request for a hearing.

(2) If the hearing official determines that an oral hearing is not necessary, then he/she shall afford the debtor a ''paper hearing.'' In a ''paper hearing,'' the hearing official will decide the issues in dispute based upon a review of the written record.

(3) If the debtor's written request for a hearing is received by either VA or Treasury within 15 business days following the mailing of the notice described in paragraph (b) of this section, then VA or Treasury shall not issue a withholding order as described in paragraph (d) of this section until the debtor is afforded the requested hearing and a decision rendered. If the debtor's written request for a hearing is not received within 15 business days following the mailing of the notice described in paragraph (b) of this section, then the hearing official shall provide a hearing to the debtor, but will not delay issuance of a withholding order as described in paragraph (d) of this section, unless the hearing official determines that the delay in filing was caused by factors beyond the debtor's control.

(4) The hearing official shall notify the debtor of:

(i) The date and time of a telephone conference hearing;

(ii) The date, time, and location of an in-person oral hearing, or;

(iii) The deadline for the submission of evidence for a written hearing.

(5) Except as provided in paragraph (c)(6) of this section, VA or Treasury shall have the burden of going forward to prove the existence or amount of the debt, after which the debtor must show, by a preponderance of the evidence, that no debt exists or that the amount of the debt is incorrect. In general, this means that the debtor must show that it is more likely than not that a debt does not exist or that the amount of the debt is incorrect. The debtor may also present evidence that terms of the repayment agreement are unlawful, would cause a financial hardship, or that collection of the debt may not be pursued due to operation of law.

(6) If the debtor has previously contested the existence and/or amount of the debt in accordance with § 1.911(c)(1) or § 1.911a(c)(1) of this title and VA subsequently rendered a decision upholding the existence or amount of the debt, then such decision shall be incorporated by reference and become the basis of the hearing official's decision on such matters described in paragraph (c)(7) of this section.

(7) The hearing official shall issue a written decision as soon as practicable, but not later than 60 days after the date on which the request for such hearing was received by VA or Treasury. The decision will be the final action for the purposes of judicial review under the Administrative Procedures Act (5 U.S.C. 701 *et seq.*). The decision shall include:

(i) A summary of the facts presented;

(ii) The hearing official's findings, analysis, and conclusions, and;

(iii) The terms of the repayment schedule, if applicable.

(d) In accordance with 31 CFR 285.11(g) and (h), VA or Treasury shall send a withholding order and certification form (Treasury Form SF–29) by first class mail to the debtor's employer within 30 days after the debtor fails to make a timely request for a hearing. If a timely request for a hearing has been filed by the debtor, then VA or Treasury shall send a withholding order and certification form by first class mail to the debtor's employer within 30 days after a final decision (*see* paragraph (c)(6) of this section) is made to proceed with the garnishment. The employer shall complete and return the certification form as described in § 285.11(h).

(e) After receipt of the garnishment order, the employer shall withhold the amount of garnishment as described in 31 CFR 285.11(i) from all disposable pay payable to the applicable debtor during each pay period.

(f) A debtor whose wages are subject to a wage withholding order under 31 CFR 285.11 may request a review, under the procedures set forth in paragraph (k) of § 285.11, of the amount garnished. A request for review shall only be considered after garnishment has been initiated. The request must be based on materially changed circumstances such as disability, divorce, or catastrophic illness which result in financial hardship that limits the debtor's ability to provide food, housing, clothing, transportation, and medical care for himself/herself and his/her dependents.

32. Section 1.924 is added to read as follows:

§ 1.924 Suspension or revocation of eligibility for federal loans, loan insurance, loan guarantees, licenses, permits, or privileges.

(a) In accordance with 31 U.S.C. 3720B and the procedures set forth in 31 CFR 285.13 and § 901.6, a person owing an outstanding non-tax debt that is in delinquent status shall not be eligible for Federal financial assistance unless exempted under paragraph (d) or waived under paragraph (e) of this section.

(b) Federal financial assistance or financial assistance means any Federal loan (other than a disaster loan), loan insurance, or loan guarantee.

(c) For the purposes of this section only, a debt is in a delinquent status if the debt has not been paid within 90 days of the payment due date or by the end of any grace period provided by statute, regulation, contract, or agreement. The payment due date is the date specified in the initial written demand for payment. Further guidance concerning the delinquent status of a debt may be found at 31 CFR 285.13(d).

(d) Upon the written request and recommendation of the Secretary of Veterans Affairs, the Secretary of the Treasury may grant exemptions from the provisions of this section. The standards for exemptions granted for classes of debts are set forth in 31 CFR 285.13(f).

(e)(1) VA's Chief Financial Officer or Deputy Chief Financial Officer may waive the provisions of paragraph (a) of this section only on a person-by-person basis.

(2) The Chief Financial Officer or Deputy Chief Financial Officer should balance the following factors when deciding whether to grant a waiver:

(i) Whether the denial of the financial assistance to the person would tend to interfere substantially with or defeat the purposes of the financial assistance program or otherwise would not be in the best interests of the Federal government; and

(ii) Whether the granting of the financial assistance to the person is contrary to the government's goal of reducing losses by requiring proper screening of potential borrowers.

(3) When balancing the factors described in paragraph (e)(1) and (e)(2) of this section, the Chief Financial Officer or Deputy Chief Financial Officer should consider:

(i) The age, amount, and cause(s) of the delinquency and the likelihood that the person will resolve the delinquent debt; and

(ii) The amount of the total debt, delinquent or otherwise, owed by the person and the person's credit history with respect to repayment of debt.

(4) A centralized record shall be retained of the number and type of waivers granted under this section.

(f) In non-bankruptcy cases, in seeking the collection of statutory penalties, forfeitures, or other similar types of claims, VA may suspend or revoke any license, permit, or other privilege granted a debtor when the debtor inexcusably or willfully fails to pay such a debt. The debtor should be advised in VA's written demand for payment of VA's ability to suspend or revoke licenses, permits, or privileges. VA may suspend or disqualify any lender, contractor, or broker who is engaged in making, guaranteeing, insuring, acquiring, or participating in loans from doing further business with VA or engaging in programs sponsored by VA if such lender, contractor, or broker fails to pay its debts to the Government within a reasonable time, or if such lender, contractor, or broker has been suspended, debarred, or disqualified from participation in a program or activity by another Federal agency. The failure of any surety to honor its obligations in accordance with 31 U.S.C. 9305 should be reported to Treasury.

(g) In bankruptcy cases, before advising the debtor of the intention to suspend or revoke licenses, permits, or privileges, VA should seek legal advice from the VA General Counsel or Regional Counsel concerning the impact of the Bankruptcy Code, particularly 11 U.S.C. 362 and 525, which may restrict such action.

(Authority: 31 U.S.C. 3720B)

33. The authority citation preceding § 1.930 is removed.

34. Sections 1.930 through 1.936 are revised to read as follows:

§ 1.930 Scope and application.

(a) The standards set forth in this part apply to the compromise of debts

pursuant to 31 U.S.C. 3711. VA may exercise such compromise authority when the amount of the debt due, exclusive of interest, penalties, and administrative costs, does not exceed $100,000 or any higher amount authorized by the Attorney General.

(b) Unless otherwise provided by law, when the principal balance of a debt, exclusive of interest, penalties, and administrative costs, exceeds $100,000 or any higher amount authorized by the Attorney General, the authority to accept the compromise rests with DOJ. If VA receives an offer to compromise any debt in excess of $100,000, VA should evaluate the compromise offer using the same factors as set forth in 38 CFR 1.931. If VA believes the offer has merit, it shall refer the debt to the Civil Division or other appropriate division in DOJ using a Claims Collection Litigation Report (CCLR). The referral shall include appropriate financial information and a recommendation for the acceptance of the compromise offer. DOJ approval is not required if VA decides to reject a compromise offer.

(c) The $100,000 limit in paragraph (b) of this section does not apply to debts that arise out of participation in a VA loan program under Chapter 37 of Title 38 of the U.S. Code. VA has unlimited authority to compromise debts arising out of participation in a Chapter 37 loan program, regardless of the amount of the debt.

§ 1.931 Bases for compromise.

(a) VA may compromise a debt if it cannot collect the full amount because:

(1) The debtor is unable to pay the full amount in a reasonable time, as verified through credit reports or other financial information;

(2) VA is unable to collect the debt in full within a reasonable time by enforced collection proceedings;

(3) The cost of collecting the debt does not justify the enforced collection of the full amount; or

(4) There is significant doubt concerning VA's ability to prove its case in court.

(b) In determining the debtor's inability to pay, VA will consider relevant factors such as the following:

(1) Age and health of the debtor;

(2) Present and potential income;

(3) Inheritance prospects;

(4) The possibility that assets have been concealed or improperly transferred by the debtor; and

(5) The availability of assets or income that may be realized by enforced collection proceedings.

(c) VA will verify the debtor's claim of inability to pay by using a credit report and other financial information as provided in paragraph (g) of this section. VA should consider the applicable exemptions available to the debtor under State and Federal law in determining the ability to enforce collection. VA also may consider uncertainty as to the price that collateral or other property will bring at a forced sale in determining the ability to enforce collection. A compromise effected under this section should be for an amount that bears a reasonable relation to the amount that can be recovered by enforced collection procedures, with regard to the exemptions available to the debtor and the time that collection will take.

(d) If there is significant doubt concerning VA's ability to prove its case in court for the full amount claimed, either because of the legal issues involved or because of a bona fide dispute as to the facts, then the amount accepted in compromise of such cases should fairly reflect the probabilities of successful prosecution to judgment, with due regard given to the availability of witnesses and other evidentiary support for VA's claim. In determining the risks involved in litigation, VA will consider the probable amount of court costs and attorney fees pursuant to the Equal Access to Justice Act, 28 U.S.C. 2412, that may be imposed against the Government if it is unsuccessful in litigation.

(e) VA may compromise a debt if the cost of collecting the debt does not justify the enforced collection of the full amount. The amount accepted in compromise in such cases may reflect an appropriate discount for the administrative and litigative costs of collection, with consideration given to the time it will take to effect collection. Collection costs may be a substantial factor in the settlement of small debts. In determining whether the cost of collecting justifies enforced collection of the full amount, VA will consider whether continued collection of the debt, regardless of cost, is necessary to further an enforcement principle.

(f) VA generally will not accept compromises payable in installments. If, however, payment of a compromise in installments is necessary, VA will obtain a legally enforceable written agreement providing that, in the event of default, the full original principal balance of the debt prior to compromise, less sums paid thereon, is reinstated. Whenever possible, VA will also obtain security for repayment.

(g) To assess the merits of a compromise offer based in whole or in part on the debtor's inability to pay the full amount of a debt within a reasonable time, VA will obtain a current financial statement from the debtor showing the debtor's assets, liabilities, income and expenses. Agencies also may obtain credit reports or other financial information to assess compromise offers.

§ 1.932 Enforcement policy.

VA may compromise statutory penalties, forfeitures, or claims established as an aid to enforcement and to compel compliance, if VA's enforcement policy in terms of deterrence and securing compliance, present and future, will be adequately served by VA's acceptance of the sum to be agreed upon.

§ 1.933 Joint and several liability.

(a) When two or more debtors are jointly and severally liable, VA will pursue collection activity against all debtors, as appropriate. VA will not attempt to allocate the burden of payment between the debtors but should proceed to liquidate the indebtedness as quickly as possible.

(b) VA will ensure that a compromise agreement with one debtor does not release VA's claim against the remaining debtors. The amount of a compromise with one debtor shall not be considered a precedent or binding in determining the amount that will be required from other debtors jointly and severally liable on the claim.

§ 1.934 Further review of compromise offers.

If VA is uncertain whether to accept a firm, written, substantive compromise offer on a debt that is within its delegated compromise authority, it may refer the offer to VA General Counsel or Regional Counsel or to the Civil Division or other appropriate division in DOJ, using a CCLR accompanied by supporting data and particulars concerning the debt. DOJ may act upon such an offer or return it to the agency with instructions or advice.

§ 1.935 Consideration of tax consequences to the Government.

In negotiating a compromise, VA will consider the tax consequences to the Government. In particular, VA will consider requiring a waiver of tax-loss-carry-forward and tax-loss-carry-back rights of the debtor.

§ 1.936 Mutual releases of the debtor and VA.

In all appropriate instances, a compromise that is accepted by VA shall be implemented by means of a mutual release, in which the debtor is released from further non-tax liability on the compromised debt in consideration of payment in full of the

compromise amount, and VA and its officials, past and present, are released and discharged from any and all claims and causes of action arising from the same transaction that the debtor may have. In the event a mutual release is not executed when a debt is compromised, unless prohibited by law, the debtor is still deemed to have waived any and all claims and causes of action against VA and its officials related to the transaction giving rise to the compromised debt.

§ 1.937 [Removed]

§ 1.938 [Removed]

35. Sections 1.937 and 1.938 are removed.

36. Sections 1.940 and 1.941 are revised to read as follows:

§ 1.940 Scope and application.

(a) The standards set forth in §§ 1.940 through 1.944 apply to the suspension or termination of collection activity pursuant to 31 U.S.C. 3711 on debts that do not exceed $100,000, or such other amount as the Attorney General may direct, exclusive of interest, penalties, and administrative costs, after deducting the amount of partial payments or collections, if any. Prior to referring a debt to DOJ for litigation, VA may suspend or terminate collection under this part with respect to the debt.

(b) If, after deducting the amount of any partial payments or collections, the principal amount of a debt exceeds $100,000, or such other amount as the Attorney General may direct, exclusive of interest, penalties, and administrative costs, the authority to suspend or terminate rests solely with DOJ. If VA believes that suspension or termination of any debt in excess of $100,000 may be appropriate, it shall refer the debt to the Civil Division or other appropriate division in DOJ, using the CCLR. The referral should specify the reasons for VA's recommendation. If, prior to referral to DOJ, VA determines that a debt is plainly erroneous or clearly without legal merit, VA may terminate collection activity regardless of the amount involved without obtaining DOJ concurrence.

§ 1.941 Suspension of collection activity.

(a) VA may suspend collection activity on a debt when:

(1) It cannot locate the debtor;

(2) The debtor's financial condition is expected to improve; or

(3) The debtor has requested a waiver or review of the debt.

(b) Based on the current financial condition of the debtor, VA may suspend collection activity on a debt when the debtor's future prospects justify retention of the debt for periodic review and collection activity and:

(1) The applicable statute of limitations has not expired; or

(2) Future collection can be effected by administrative offset, notwithstanding the expiration of the applicable statute of limitations for litigation of claims, and with due regard to the 10-year limitation for administrative offset prescribed by 31 U.S.C. 3716(e)(1); or

(3) The debtor agrees to pay interest on the amount of the debt on which collection will be suspended, and such suspension is likely to enhance the debtor's ability to pay the full amount of the principal of the debt with interest at a later date.

(c) Collection action may also be suspended, in accordance with §§ 1.911, 1.911a, 1.912, and 1.912a, pending VA action on requests for administrative review of the existence or amount of the debt or a request for waiver of collection of the debt. However, collection action will be resumed once VA issues an initial decision on the administrative review or waiver request.

(d) When VA learns that a bankruptcy petition has been filed with respect to a debtor, in most cases the collection activity on a debt must be suspended, pursuant to the provisions of 11 U.S.C. 362, 1201, and 1301, unless VA can clearly establish that the automatic stay does not apply, has been lifted, or is no longer in effect. VA shall seek legal advice immediately from either the General Counsel or Regional Counsel and, if legally permitted, take the necessary steps to ensure that no funds or money are paid by VA to the debtor until relief from the automatic stay is obtained.

37. Section 1.942 is amended by adding paragraphs (g) and (h) to read as follows:

§ 1.942 Termination of collection activity.

* * * * *

(g) *Discharge in bankruptcy.* Generally, VA shall terminate collection activity on a debt that has been discharged in bankruptcy, regardless of the amount. VA may continue collection activity, subject to the provisions of the Bankruptcy Code, for any payments provided under a plan of reorganization. Offset and recoupment rights may survive the discharge of the debtor in bankruptcy and, under some circumstances, claims also may survive the discharge.

(h) Before terminating collection activity, VA should have pursued all appropriate means of collection and determined, based upon the results of the collection activity, that the debt is uncollectible. Termination of collection activity ceases active collection of the debt. The termination of collection activity does not preclude VA from retaining a record of the account for purposes of:

(1) Selling the debt, if the Secretary of the Treasury determines that such sale is in the best interests of the United States;

(2) Pursuing collection at a subsequent date in the event there is a change in the debtor's status or a new collection tool becomes available;

(3) Offsetting against future income or assets not available at the time of termination of collection activity; or

(4) Screening future applicants for prior indebtedness.

38. Section 1.943 is revised and § 1.944 is added to read as follows:

§ 1.943 Exception to termination.

When a significant enforcement policy is involved, or recovery of a judgment is a prerequisite to the imposition of administrative sanctions, VA may refer debts for litigation even though termination of collection activity may otherwise be appropriate.

§ 1.944 Discharge of indebtedness; reporting requirements.

(a) Before discharging a delinquent debt (also referred to as a close out of the debt), VA shall take all appropriate steps to collect the debt in accordance with 31 U.S.C. 3711(g), including, as applicable, administrative offset, tax refund offset, Federal salary offset, referral to Treasury or Treasury-designated debt collection centers or private collection contractors, credit bureau reporting, wage garnishment, litigation, and foreclosure. Discharge of indebtedness is distinct from termination or suspension of collection activity under §§ 1.940 through 1.943 and is governed by the Internal Revenue Code. When collection action on a debt is suspended or terminated, the debt remains delinquent and further collection action may be pursued at a later date in accordance with the standards set forth in § 1.900 *et seq.* When VA discharges a debt in full or in part, further collection action is prohibited. Therefore, VA should make the determination that collection action is no longer warranted before discharging a debt. Before discharging a debt, VA must terminate debt collection action.

(b) Upon discharge of an indebtedness, VA must report the discharge to the Internal Revenue Service (IRS) in accordance with the requirements of 26 U.S.C. 6050P and 26 CFR 1.6050P–1. VA may request

Treasury or Treasury-designated debt collection centers to file such a discharge report to the IRS on VA's behalf.

(c) When discharging a debt, VA must request that any liens of record securing the debt be released.

(d) 31 U.S.C. 3711(i)(2) requires agencies to sell a delinquent nontax debt upon termination of collection action if the Secretary of the Treasury determines such a sale is in the best interests of the United States. Since the discharge of a debt precludes any further collection action (including the sale of a delinquent debt), VA may not discharge a debt until the requirements of Section 3711(i)(2) have been met.

39. The authority citation preceding § 1.950 is removed.

40. Sections 1.950 through 1.953 are revised to read as follows:

§ 1.950 Prompt referral.

(a) VA shall promptly refer debts to DOJ for litigation where aggressive collection activity has been taken in accordance with §§ 1.900 *et seq.*, and such debts cannot be compromised, or on which collection activity cannot be suspended or terminated, in accordance with parts §§ 1.930 through 1.936 and §§ 1.940 through 1.944. Debts for which the principal amount is over $1,000,000, or such other amount as the Attorney General may direct, exclusive of interest and other late payment charges, shall be referred to the Civil Division or other division responsible for litigating such debts at DOJ. Debts for which the principal amount is $1,000,000, or less, or such other amount as the Attorney General may direct, exclusive of interest or penalties, shall be referred to DOJ's Nationwide Central Intake Facility as required by the CCLR instructions. Debts should be referred as early as possible, consistent with aggressive agency collection activity and the observance of the standards contained in §§ 1.900 *et seq.*, and, in any event, well within the period for initiating timely lawsuits against the debtors. VA shall make every effort to refer delinquent debts to DOJ for litigation within 1 year of the date such debts last became delinquent. In the case of guaranteed or insured loans, VA should make every effort to refer these delinquent debts to DOJ for litigation within 1 year from the date the loan was presented to VA for payment or reinsurance.

(b) DOJ has exclusive jurisdiction over the debts referred to it pursuant to this section. VA shall immediately terminate the use of any administrative collection activities to collect a debt at the time of the referral of that debt to DOJ. VA should advise DOJ of the collection activities that have been utilized to date, and their result. VA shall refrain from having any contact with the debtor and shall direct all debtor inquiries concerning the debt to DOJ. VA shall immediately notify DOJ of any payments credited to the debtor's account after referral of a debt under this section. DOJ shall notify VA, in a timely manner, of any payments it receives from the debtor.

§ 1.951 Claims Collection Litigation Report (CCLR).

(a) Unless excepted by Justice, VA shall complete the CCLR, accompanied by a signed Certificate of Indebtedness, to refer all administratively uncollectible claims to DOJ for litigation. VA shall complete all of the sections of the CCLR appropriate to each claim as required by the CCLR instructions and furnish such other information as may be required in specific cases.

(b) VA shall indicate clearly on the CCLR the actions it wishes DOJ to take with respect to the referred claim.

(c) VA shall also use the CCLR to refer claims to DOJ to obtain approval of any proposals to compromise the claims or to suspend or terminate agency collection activity.

§ 1.952 Preservation of evidence.

VA must take care to preserve all files and records that may be needed by DOJ to prove its claims in court. VA ordinarily should include certified copies of the documents that form the basis for the claim when referring such claims to DOJ for litigation. VA shall provide originals of such documents immediately upon request by DOJ.

§ 1.953 Minimum amount of referrals to the Department of Justice.

(a) VA shall not refer for litigation claims of less than $2,500, exclusive of interest, penalties, and administrative costs, or such other amount as the Attorney General shall from time to time prescribe. DOJ shall promptly notify referring agencies if the Attorney General changes this minimum amount.

(b) VA shall not refer claims of less than the minimum amount unless:

(1) Litigation to collect such smaller claims is important to ensure compliance with VA's policies or programs;

(2) The claim is being referred solely for the purpose of securing a judgment against the debtor, which will be filed as a lien against the debtor's property pursuant to 28 U.S.C. 3201 and returned to VA for enforcement; or

(3) The debtor has the clear ability to pay the claim and the Government effectively can enforce payment, with due regard for the exemptions available to the debtor under State and Federal law and the judicial remedies available to the Government.

(c) VA should consult with the Financial Litigation Staff of the Executive Office for United States Attorneys, in DOJ, prior to referring claims valued at less than the minimum amount.

§ 1.954 [Removed]

41. Section 1.954 is removed.

42. Section 1.955 is amended by revising paragraphs (b) through (d) to read as follows: :

§ 1.955 Regional Office Committees on Waivers and Compromises.

* * * * *

(b) *Selection.* The Director shall designate the employees to serve as Chairperson, members, and alternates. Except upon specific authorization of the Under Secretary for Benefits, when workload warrants a full-time committee, such designation will be part-time additional duty upon call of the Chairperson.

(c) *Control and staff.* The administrative control of each Committee on Waivers and Compromises is the responsibility of the station's Fiscal Officer. However, the station Director has the authority to reassign the administrative control function to another station activity, rather than the Fiscal Officer, whenever the Director determines that such reassignment is appropriate. The quality control of the professional and clerical staff of the Committee is the responsibility of the Chairperson.

(d) *Overall control.* The Assistant Secretary for Management is delegated complete management authority, including planning, policy formulation, control, coordination, supervision, and evaluation of Committee operations.

* * * * *

43. Section 1.956 is amended by:

A. Revising paragraphs (a)(2)(i) and (a)(2)(ii).

B. Removing paragraph (a)(2)(iii).

C. Redesignating paragraph (a)(2)(iv) as new paragraph (a)(2)(iii).

D. Revising newly redesignated paragraph (a)(2)(iii).

E. Revising paragraphs (a)(3) and (b).

The revisions read as follows:

§ 1.956 Jurisdiction.

* * * * *

(a) * * *

(2) Arising out of operations of the Veterans Health Administration:

(i) Debts resulting from services furnished in error (§ 17.101(a) of this chapter).

(ii) Debts resulting from services furnished in a medical emergency (§ 17.101(b) of this chapter).

(iii) Other claims arising in connection with transactions of the Veterans Health Administration (§ 17.103(c) of this chapter).

(3) Claims for erroneous payments of pay and allowances, and erroneous payments of travel, transportation, and relocation expenses and allowances, made to or on behalf of employees (5 U.S.C. 5584)

(b) The Under Secretary for Benefits may, at his or her discretion, assume original jurisdiction and establish an ad hoc Board to determine a particular issue arising within this section.

* * * * *

44. Section 1.957 is amended by:

A. Revising paragraphs (a)(1) introductory text and (a)(1)(iii).

B. Removing paragraph (a)(3).

The revision reads as follows:

§ 1.957 Committee authority.

(a) * * *

(1) *Waivers.* A decision may be rendered to grant or deny waiver of collection of a debt in the following debt categories:

* * * * *

(iii) Services erroneously furnished (§ 17.101(a)).

* * * * *

45. Section 1.958 is revised to read as follows:

§ 1.958 Finality of decisions.

A decision by the regional office Committee, operating within the scope of its authority, denying waiver of all or part of a debt arising out of participation in a VA benefit or home loan program, is subject to appeal in accordance with 38 CFR parts 19 and 20. A denial of waiver of an erroneous payment of pay and allowances is subject to appeal in accordance with § 1.963a(a). There is no right of appeal from a decision rejecting a compromise offer.

46. Section 1.963a is revised to read as follows:

§ 1.963a Waiver; erroneous payments of pay and allowances.

(a) The provisions applicable to VA (including refunds) concerning waiver actions relating to erroneous payments to VA employees of pay and allowances, and travel, transportation, and relocation expenses and allowances are set forth in 5 U.S.C. 5584. The members of Committees on Waivers and Compromises assigned to waiver actions under § 1.955 of this part are delegated all authority granted the Secretary under 5 U.S.C. 5584 to deny waiver or to grant waiver in whole or in part of any debt regardless of the amount of the indebtedness. Committee members also have exclusive authority to consider and render a decision on the appeal of a waiver denial or the granting of a partial waiver. However, the Chairperson of the Committee must assign the appeal to a different Committee member or members than the member or members who made the original decision that is now the subject of the appeal. The following are the only provisions of §§ 1.955 through 1.970 of this part applicable to waiver actions concerning erroneous payments of pay and allowances and travel, transportation, and relocation expenses and allowances under 5 U.S.C. 5584: §§ 1.955(a) through (e)(2), 1.956(a)(introductory text) and (a)(3), 1.959, 1.960, 1.963a, 1.965(c) and 1.967(c).

(b) Waiver may be granted under this section and 5 U.S.C. 5584 when collection would be against equity and good conscience and not in the best interest of the United States. Generally, these criteria will be met by a finding that the erroneous payment occurred through administrative error and that there is no indication of fraud, misrepresentation, fault, or lack of good faith on the part of the employee or other person having an interest in obtaining a waiver of the claim. Generally, waiver is precluded when an employee receives a significant unexplained increase in pay or allowances, or otherwise knows, or reasonably should know, that an erroneous payment has occurred, and fails to make inquiries or bring the matter to the attention of the appropriate officials. Waiver under this standard will depend upon the facts existing in each case.

(c) An application for waiver must be received within 3 years immediately following the date on which the erroneous payment was discovered.

(Authority: 5 U.S.C. 5584, 38 U.S.C. 501)

§ 1.965 [Amended]

47. Section 1.965 is amended by removing paragraph (b)(3).

§ 1.970 [Amended]

48. Section 1.970 is amended by removing ''§§ 1.900 through 1.937'' and adding, in its place, ''§§ 1.930 through 1.936''.

49. Section 1.980 is amended by:

A. Revising paragraphs (a) and (b).

B. Redesignating paragraphs (f) and (g) as (h) and (i).

C. Adding new paragraphs (f) and (g).

D. Revising newly redesignated paragraph (h).

The revisions and additions read as follows:

§ 1.980 Scope.

(a) In accordance with 5 CFR part 550, subpart K, the provisions set forth in §§ 1.980 through 1.995 implement VA's authority for the use of salary offset to satisfy certain debts owed to VA.

(b) These regulations apply to offsets from the salaries of current employees of VA, or any other agency, who owe debts to VA. Offsets by VA from salaries of current VA employees who owe debts to other agencies shall be processed in accordance with procedures set forth in 5 CFR part 550, subpart K.

* * * * *

(f) These regulations do not apply to a routine intra-agency adjustment of pay that is made to correct an overpayment of pay attributable to clerical or administrative errors or delays in processing pay documents, if the overpayment occurred within the four pay periods preceding the adjustment and, at the time of such adjustment, or as soon thereafter as practicable, the individual is provided written notice of the nature and amount of the adjustment and a point of contact for such adjustment.

(g) These regulations do not apply to any adjustment to collect a debt amounting to $50 or less, if at the time of such adjustment, or as soon thereafter as practicable, the individual is provided with written notice of the nature and amount of the adjustment and a point of contact for contesting such adjustment.

(h) These regulations do not preclude the compromise, suspension, or termination of collection action under the FCCS (31 CFR parts 900 through 904) and VA regulations 38 CFR 1.930 through 1.953.

* * * * *

50. Section 1.982 is amended by revising paragraphs (a), (b), and (c)(3) to read as follows:

§ 1.982 Salary offsets of debts involving benefits under the laws administered by VA.

(a) VA will not collect a debt involving benefits under the laws administered by VA by salary offset unless the Secretary or appropriate designee first provides the employee with a minimum of 30 calendar days written notice.

(b) If the employee has not previously appealed the amount or existence of the debt under 38 CFR parts 19 and 20 and the time for pursuing such an appeal has not expired (§ 20.302), the Secretary or appropriate designee will provide the employee with written notice of the debt. The written notice will state that the employee may appeal the amount and existence of the debt in accordance

with the procedures set forth in 38 CFR parts 19 and 20 and will contain the determination and information required by § 1.983(b)(1) through (5), (7), (9), (10), and (12) through (14). The notice will also state that the offset schedule under the procedures set forth in § 1.984 and such a request will stay the commencement of salary offset.

(c) * * *

(3) That the employee may request a waiver of the debt pursuant to 38 CFR 1.911(c)(2) subject to the time limits of 38 U.S.C. 5302.

* * * * *

51. Section 1.983 is amended by revising paragraphs (b)(8) and (b)(13) to read as follows:

§ 1.983 Notice requirements before salary offsets of debts not involving benefits under laws administered by VA.

* * * * *

(b) * * *

(8) The VA employee's right to request an oral or paper hearing on the Secretary or appropriate designee's determination of the existence or amount of the debt, or the percentage of disposable pay to be deducted each pay period, so long as a request is filed by the employee as prescribed by the Secretary. A VA Board of Contract Appeals Administrative Judge or Hearing Examiner shall conduct such a hearing for all VA employees. A VA Board of Contract Appeals Administrative Judge or Hearing Examiner, or any other VA hearing official, may also conduct an oral or paper hearing at the request of a non-VA employee on the determination by an appropriately designated official of the employing agency of the existence or amount of the debt, or the percentage of disposable pay to be deducted each pay period, so long as a hearing request is filed by the non-VA employee as prescribed by the employing agency.

* * * * *

(13) The employee's right, if applicable, to request waiver under 5 U.S.C. 5584 and 38 CFR 1.963a and any other rights and remedies available to the employee under statutes or regulations governing the program for which the collection is being made; and

* * * * *

§ 1.984 [Amended]

52. Section 1.984 is amended by:

A. In paragraph (a), removing ''20 calendar days'' and adding, in its place, ''30 calendar days''.

B. In paragraph (b), removing ''20 day period'' and adding, in its place, ''30-day period''.

§ 1.989 [Amended]

53. In § 1.989 paragraph (a) is amended by removing ''20 calendar days'' and adding, in its place, ''30 calendar days''.

§ 1.990 [Amended]

54. In § 1.990, paragraph (a) is amended by removing ''20 calendar days'' and adding, in its place, ''30 calendar days''.

55. Section 1.991 is amended by revising paragraph (d) to read as follows:

§ 1.991 Procedures for salary offset: when deductions may begin.

* * * * *

(d) If an employee retires, resigns, or his or her employment ends before collection of the amount of the indebtedness is completed, the remaining indebtedness will be collected according to procedures for administrative offset (*see* 31 CFR 901.3, 38 CFR 1.912, and 5 CFR 831.1801 through 831.1808).

56. Section 1.992 is amended by revising paragraph (c) to read as follows:

§ 1.992 Procedures for salary offset.

* * * * *

(c) *Imposition of interest, penalties, and administrative costs.* Interest, penalties, and administrative costs shall be charged in accordance with 31 CFR 901.9 and 38 CFR 1.915.

57. Section 1.995 is added to read as follows:

§ 1.995 Requesting recovery through centralized administrative offset.

(a) Under 31 U.S.C. 3716, VA and other creditor agencies must notify Treasury of all debts over 180 days delinquent so that recovery of such debts may be made by centralized administrative offset. This includes those debts that VA and other agencies seek from the pay account of an employee of another Federal agency via salary offset. Treasury and other disbursing officials will match payments, including Federal salary payments, against these debts. Where a match occurs, and all the requirements for offset have been met, the payment will be offset to satisfy the debt in whole or part.

(b) Prior to submitting a debt to Treasury for the purpose of collection by offset, including salary offset, VA shall provide written certification to Treasury that:

(1) The debt is past due and legally enforceable in the amount submitted to Treasury and that VA will ensure that any subsequent collections are credited to the debt and that Treasury shall be notified of such;

(2) Except in the case of a judgment debt or as otherwise allowed by law, the debt is referred to Treasury for offset within 10 years after VA's right of action accrues;

(3) VA has complied with the provisions of 31 U.S.C. 3716 and 38 CFR 1.912 and 1.912a including, but not limited to, those provisions requiring that VA provide the debtor with applicable notices and opportunities for a review of the debt; and

(4) VA has complied with the provisions of 5 U.S.C. 5514 (salary offset) and 38 CFR 1.980 through 1.994 including, but not limited to, those provisions requiring that VA provide the debtor with applicable notices and opportunities for a hearing.

(c) Specific procedures for notifying Treasury of debts for purposes of collection by centralized administrative offset are contained in the 31 CFR 285.7. VA and other creditor agencies may notify Treasury of debts that have been delinquent for 180 days or less, including debts that VA and other creditor agencies seek to recover from the pay of an employee via salary offset.

PART 2—DELEGATIONS OF AUTHORITY

1. The authority citation for part 2 continues to read as follows:

Authority: 5 U.S.C. 302, 552a; 38 U.S.C. 501, 512, 515, 1729, 1729A, 5711; 44 U.S.C. 3702, unless otherwise noted.

2. Section 2.6 is amended by:

A. Revising the heading of paragraph (c).

B. In paragraph (c)(1), removing the ''Assistant Secretary for Finance and Information Resources Management'' and adding, in its place, ''Assistant Secretary for Management''.

C. In paragraph (c)(2), removing the ''Assistant Secretary for Finance and Information Resources Management'' each time it appears and adding, in its place, ''Assistant Secretary for Management''.

D. Revising paragraph (d).

The revisions read as follows:

§ 2.6 Secretary's delegations of authority to certain officials (38 U.S.C. 512).

* * * * *

(c) *Office of Management.*

* * * * *

(d) The Assistant Secretary for Management (Chief Financial Officer) is delegated authority to take appropriate action (other than provided for in paragraph (e)(3) and (e)(4) of this section) in connection with the collection of civil claims by VA for money or property, as authorized in § 1.900 *et seq.* The Assistant Secretary

for Management (Chief Financial Officer) may redelegate such authority as he/she deems appropriate to administration heads and staff office directors.

* * * * *

[FR Doc. 03–31620 Filed 12–24–03; 8:45 am

BILLING CODE 8320–01–P

ENVIRONMENTAL PROTECTION AGENCY

40 CFR Part 70

[CA 110–OPPb; FRL–7602–8]

Revisions to the Operating Permits Program, San Diego County Air Pollution Control District

AGENCY: Environmental Protection Agency (EPA).

ACTION: Proposed rule.

SUMMARY: EPA is proposing to approve revisions to the San Diego County Air Pollution Control District's Part 70 Operating Permits (Title V) Program. The proposed revisions address a change in the major source threshold for volatile organic compounds (VOCs) and oxides of nitrogen (NO_X). This change is based on the redesignation of San Diego County as in attainment of the federal one-hour ozone standard (see 68 FR 37976, June 26, 2003). As a result of this action, some sources that would have previously been considered major sources, and therefore would have been required to obtain a Title V operating permit, would no longer need to apply for a Title V permit. We are also approving revisions to several other parts of San Diego's Title V program. For more information see ''What is being addressed in this document,'' below.

DATES: Any comments on this proposal must arrive by January 28, 2004.

ADDRESSES: Send comments to Gerardo Rios, Permits Office Chief (AIR–3), U.S. Environmental Protection Agency, Region IX, 75 Hawthorne Street, San Francisco, CA 94105–3901 or e-mail to *rios.gerardo@epa.gov*, or submit comments at *http://www.regulations.gov.*

You can inspect copies of the submitted rule revisions, EPA's technical support document (TSD), and public comments at our Region IX office during normal business hours by appointment.

FOR FURTHER INFORMATION CONTACT: Kathleen Stewart, EPA Region IX, (415) 947–4119, *stewart.kathleen@epa.gov.*

SUPPLEMENTARY INFORMATION: This proposal addresses the following Rules: 1401(c); 1410(i), (j), (l), and (q); 1418(b), (c), and (e); 1415 (a); 1421(a) and (b); and 1425(a) and (b). In the Rules and Regulations section of this **Federal Register**, we are approving these rules in a direct final action without prior proposal because we believe these revisions are not controversial. If we receive adverse comments, however, we will publish a timely withdrawal of the direct final rule and address the comments in a subsequent action based on this proposed rule. Please note that if we receive adverse comment on an amendment, paragraph, or section of this rule and if that provision may be severed from the remainder of the rule, we may adopt as final those provisions of the rule that are not the subject of an adverse comment.

We do not plan to open a second comment period, so anyone interested in commenting should do so at this time. If we do not receive adverse comments, no further activity is planned. For further information, please see the direct final action.

Dated: December 15, 2003.

Keith Takata,

Acting Regional Administrator, Region IX.

Part 70, Chapter I, Title 40 of the Code of Federal Regulations is amended as follows:

PART 70—[AMENDED]

1. The authority citation for part 70 continues to read as follows:

Authority: 42 U.S.C. 7401 *et seq.*

Subpart F—California

2. Appendix A to Part 70 is amended by adding under ''California'' paragraph (x) to read as follows:

Appendix A to Part 70—Approval Status of State and Local Operating Permits Programs

* * * * *

California

* * * * *

(x) * * *

(5) Revisions were submitted on August 19, 2003, effective February 27, 2004.

* * * * *

[FR Doc. 03–31871 Filed 12–24–03; 8:45 am]

BILLING CODE 6560–50–P

ENVIRONMENTAL PROTECTION AGENCY

40 CFR Parts 260 and 261

[RCRA—2002–0031; FRL–7602–9]

RIN 2050–AE98

Proposed Revisions to the Definition of Solid Waste—Extension of Comment Period

AGENCY: Environmental Protection Agency.

ACTION: Proposed rule; extension of comment period.

SUMMARY: The U.S. Environmental Protection Agency (EPA) is extending the comment period for the proposed rule entitled ''Revisions to the Definition of Solid Waste,'' which appeared in the **Federal Register** on October 28, 2003 (68 FR 61558). The public comment period for this proposed rule was to end on January 26, 2004. The purpose of this notice is to extend the comment period to end on February 25, 2004.

DATES: EPA will accept public comments on this proposed regulation until February 25, 2004. Comments submitted after this date will be marked ''late'' and may not be considered.

ADDRESSES: Comments may be submitted by mail to: OSWER Docket, Environmental Protection Agency, Mailcode: 5305T, 1200 Pennsylvania Avenue, NW., Washington, DC 20460, Attention Docket ID No. RCRA–2002–0031. Comments may also be submitted electronically, or through hand delivery/courier; follow the detailed instructions as provided below in the **SUPPLEMENTARY INFORMATION** section of this notice.

FOR FURTHER INFORMATION CONTACT: For general information on the proposed regulation, contact the RCRA Call Center at 800–424–9346 or TDD 800–553–7672 (hearing impaired). In the Washington, DC, metropolitan area, call (703) 412–9810 or TDD (703) 412–3323. For more detailed information on specific aspects of this rulemaking, contact Dave Fagan at (703) 308–0603 (*fagan.david@epa.gov*), or Ingrid Rosencrantz at (703) 605–0709 (*rosencrantz.ingrid@epa.gov*).

SUPPLEMENTARY INFORMATION: The proposed rule that is the subject of this notice, and which was published in the **FEDERAL REGISTER** on October 28, 2003, would revise the definition of solid waste under the Resource Conservation and Recovery Act (RCRA), by identifying certain recyclable hazardous secondary materials as not ''discarded,''

and thus not subject to regulation as wastes under Subtitle C of RCRA. The proposed rule would also establish specific regulatory criteria for determining whether or not hazardous secondary materials are recycled legitimately.

The comment period for the proposed rule was scheduled to end on January 26, 2004. However, a public commenter (the National Paint and Coatings Association) has requested that EPA extend the comment period by 30 days, noting that it (and other organizations) is working to respond to several other important EPA rulemaking proposals whose comment periods overlap with that of this proposal. This commenter also noted that the comment period for this proposed rule extends over the holiday season, which additionally impacts their ability to fully review the proposal and formulate a comprehensive set of comments.

EPA believes this request is reasonable. EPA also notes that this rule is not subject to any statutory or judicial deadlines. We are therefore extending the comment period for this proposal until February 25, 2004.

How and to Whom Do I Submit Comments?

You may submit comments electronically, by mail, or through hand delivery/courier. To ensure proper receipt by EPA, identify the appropriate docket identification number in the subject line on the first page of your comment. Please ensure that your comments are submitted within the specified comment period. Comments received after the close of the comment period will be marked ''late.'' EPA is not required to consider these late comments.

Electronically. If you submit an electronic comment as prescribed below, EPA recommends that you include your name, mailing address, and an e-mail address or other contact information in the body of your comment. Also include this contact information on the outside of any disk or CD–ROM you submit, and in any cover letter accompanying the disk or CD–ROM. This ensures that you can be identified as the submitter of the comment and allows EPA to contact you in case EPA cannot read your comment due to technical difficulties or needs further information on the substance of your comment. EPA's policy is that EPA will not edit your comment, and any identifying or contact information provided in the body of a comment will be included as part of the comment that is placed in the official public docket, and made available in EPA's electronic public docket. If EPA cannot read your comment due to technical difficulties and cannot contact you for clarification, EPA may not be able to consider your comment.

Your use of EPA's electronic public docket to submit comments to EPA electronically is EPA's preferred method for receiving comments. Go directly to EPA Dockets at *http://www.epa.gov/edocket,* and follow the online instructions for submitting comments. To access EPA's electronic public docket from the EPA Internet Home Page, select ''Information Sources,'' ''Dockets,'' and ''EPA Dockets.'' Once in the system, select ''search,'' and then key in Docket ID No. RCRA–2002–0031. The system is an ''anonymous access'' system, which means EPA will not know your identity, e-mail address, or other contact information unless you provide it in the body of your comment.

Comments may be sent by electronic mail (e-mail) to *rcra-docket@epamail.epa.gov,* Attention Docket ID No. RCRA–2002–0031. In contrast to EPA's electronic public docket, EPA's e-mail system is not an ''anonymous access'' system. If you send an e-mail comment directly to the Docket without going through EPA's electronic public docket, EPA's e-mail system automatically captures your e-mail address. E-mail addresses that are automatically captured by EPA's e-mail system are included as part of the comment that is placed in the official public docket, and made available in EPA's electronic public docket.

You may submit comments on a disk or CD–ROM that you mail to the mailing address identified in the following paragraph. These electronic submissions will be accepted in WordPerfect or ASCII file format. Avoid the use of special characters and any form of encryption.

By Hand Delivery or Courier. Deliver your comments to: OSWER Docket, EPA West Building, Room B102, 1301 Constitution Avenue, NW., Washington, DC., Attention Docket ID No. RCRA–2002–0031. Such deliveries are only accepted during the Docket's normal hours of operation (8:30 a.m. to 4:30 p.m. Monday through Friday, excluding legal holidays).

Dated: December 16, 2003.

Matt Hale,

Acting Director, Office of Solid Waste.

[FR Doc. 03–31868 Filed 12–24–03; 8:45 am]

BILLING CODE 6560–50–P

DEPARTMENT OF TRANSPORTATION

National Highway Traffic Safety Administration

49 CFR Part 533

[Docket No. 2003–16128]

RIN 2127–AJ17

Reforming the Automobile Fuel Economy Standards Program

AGENCY: National Highway Traffic Safety Administration (NHTSA), Department of Transportation (DOT).

ACTION: Advance notice of proposed rulemaking.

SUMMARY: This document seeks comment on various issues relating to the corporate average fuel economy (CAFE) program. In particular, this document seeks comments relating to possible enhancements to the program that will assist in furthering fuel conservation while protecting motor vehicle safety and the economic vitality of the auto industry. The agency is particularly interested in improvements to the structure of the CAFE program authorized under current statutory authority. The focus of this document is to solicit comment on the structure of the CAFE program, not the stringency level for a future CAFE standard.

DATES: Comments must be received on or before April 27, 2004.

ADDRESSES: You may submit comments [identified by DOT DMS Docket Number 2003–16128] by any of the following methods:

- *Web Site: http://dms.dot.gov.* Follow the instructions for submitting comments on the DOT electronic docket site.
- *Fax:* 1–202–493–2251.
- *Mail:* Docket Management Facility; U.S. Department of Transportation, 400 Seventh Street, SW., Nassif Building, Room PL–401, Washington, DC 20590–001.
- *Hand Delivery:* Room PL–401 on the plaza level of the Nassif Building, 400 Seventh Street, SW., Washington, DC, between 9 am and 5 pm, Monday through Friday, except Federal Holidays.
- *Federal eRulemaking Portal:* Go to *http://www.regulations.gov.* Follow the online instructions for submitting comments.

Instructions: All submissions must include the agency name and docket number or Regulatory Identification Number (RIN) for this rulemaking. For detailed instructions on submitting comments and additional information on the rulemaking process, see the

Public Participation heading of the Supplementary Information section of this document. Note that all comments received will be posted without change to *http://dms.dot.gov* including any personal information provided. Please see the Privacy Act heading under Regulatory Analyses and Notices.

Docket: For access to the docket to read background documents or comments received, go to *http://dms.dot.gov* at any time or to Room PL–401 on the plaza level of the Nassif Building, 400 Seventh Street, SW., Washington, DC, between 9 am and 5 pm, Monday through Friday, except Federal Holidays.

FOR FURTHER INFORMATION CONTACT: For non-legal issues, call Ken Katz, Lead Engineer, Fuel Economy Division, Office of Planning and Consumer Standards, at (202) 366–0846, facsimile (202) 493–2290, electronic mail *kkatz@nhtsa.dot.gov*. For legal issues, call Otto Matheke, Office of the Chief Counsel, at (202) 366–5263, electronic mail *omatheke@nhtsa.dot.gov*.

SUPPLEMENTARY INFORMATION:

Table of Contents

I. Background
II. Why CAFE Reform?
III. Comments To Date on CAFE Reform
A. Attribute-Based Standards
B. Increasing GVWR Limit on Vehicles Subject to CAFE Standards
C. Vehicle Classification
D. Credit Availability
E. Two-Fleet Rule
F. Separate Standards for Cars and Light Trucks
G. Uniform Percentage Increase
IV. The EPCA and CAFE Reform
V. The Structure of Light Truck Standards
A. Two or More Classes of Light Trucks
B. Functional Attribute-Based System
1. Weight-Based Standard
2. Size-Based Standards
3. Mixed Attribute-Based Standards
C. Fixed Attribute System
VI. Definitional Changes to the Current Vehicle Classification System
A. Vehicle Classification Using A Single Attribute
B. The Flat Floor Provision
C. Open Cargo Bed
D. Off-Highway Operation
VII. Expanding the Application of the CAFE Program
VIII. Conclusion
IX. Public Participation
X. Regulatory Analyses and Notices

I. Background

Congress enacted the Energy Policy and Conservation Act (EPCA Pub. L. 94–163) during the aftermath of the energy crisis created by the oil embargo of 1973–74. The Act established an automotive fuel economy regulatory program by adding Title V, ''Improving Automotive Efficiency,'' to the Motor Vehicle Information and Cost Saving Act. Title V has been amended from time to time and codified without substantive change as Chapter 329 of title 49, United States Code. Chapter 329 provides for the issuance of average fuel economy standards for passenger automobiles and automobiles that are not passenger automobiles (light trucks).

Congress established a statutory corporate average fuel economy standard applicable to passenger automobiles, and NHTSA has from time to time amended that statutory standard. The Secretary of Transportation has the authority to change the standard if it no longer represents the ''maximum feasible'' standard consistent with the criteria set forth in the statute.[1] Pursuant to that authority, the Secretary amended the passenger car standard with regard to model years (MYs) 1986–1989 to address situations in which, despite manufacturers' good faith compliance plans, market conditions rendered the statutory standard impracticable and infeasible.[2] Since 1990, the CAFE standard for passenger automobiles has been 27.5 miles per gallon (mpg).

Congress did not establish by statute a CAFE standard for light trucks. Instead, Congress directed the Secretary to consider appropriate CAFE standards applicable to a light truck fleet, or alternatively, to classes of light trucks, and to establish CAFE standards at least 18 months prior to the start of each model year. The first light truck fuel economy standards were established for MY 1979 and applied to light trucks with Gross Vehicle Weight Ratings (GVWR) up to 6,000 pounds. Beginning with MY 1980, NHTSA raised this GVWR ceiling to 8,500 pounds.

In 1977, NHTSA issued regulations indicating which vehicles should be subject to the CAFE program and establishing the distinction, imbued throughout the statute, between passenger and non-passenger automobiles (42 FR 38362). These regulations reflect the vehicle fleet prevalent at that time, and in particular, sought to distinguish between vehicles primarily designed for the transport of passengers and those designed for the transport of cargo. To some extent, that distinction was meant to reflect a difference between personal transportation and that designed for commercial, agricultural or recreational activity. The regulations accordingly attempt to define vehicles by the type of use to which they were generally put in the mid-1970s (in part in accordance with whether they were usually built on passenger car or truck platforms).

In 1994, the agency departed from its past practice of considering light truck standards for one or two model years at a time and published an Advance Notice of Proposed Rulemaking (ANPRM) in the **Federal Register** outlining NHTSA's intention to set standards for some, or all, of the model years from 1998 to 2006 (59 FR 16324, April 6, 1994).

On November 15, 1995, the Department of Transportation and Related Agencies Appropriations Act for FY 1996 (Pub. L. 104–50) was enacted. Section 330 of that Act provided:

> None of the funds in this Act shall be available to prepare, propose, or promulgate any regulations * * * prescribing corporate average fuel economy standards for automobiles * * * in any model year that differs from standards promulgated for such automobiles prior to enactment of this section.

This prohibition applied to both passenger automobiles and non-passenger automobiles, and language continuing the prohibition was included in the Appropriations Acts for each of FYs 1997–2001.

While the Department of Transportation and Related Agencies Appropriations Act for FY 2001 (Pub. L. 106–346) contained a restriction on CAFE rulemaking identical to that contained in prior appropriation acts, the conference committee report for that act directed that NHTSA fund a study by National Academy of Sciences (NAS) to evaluate the effectiveness and impacts of CAFE standards (H. Rept. No. 106–940, at p. 117–118).

The NAS submitted its preliminary report to the Department of Transportation on July 30, 2001. The final report was released in January 2002. The report concludes that technologies exist that could significantly increase passenger car and light truck fuel economy within 15 years, while maintaining vehicle size, weight, utility, and performance. However, their development cycles—as well as future economic, regulatory, safety and consumer preferences—will influence the extent to which these technologies could lead to increased fuel economy in the U.S. market. Recognizing the many trade-offs that must be considered in setting fuel economy standards, the committee took no position on what the appropriate

[1] In setting CAFE standards, the statute directs the Secretary to consider technological feasibility, economic practicability, the effect of other government regulations on fuel economy and the nation's need to conserve energy.

[2] To date, the agency has not considered whether a more stringent fuel economy standard than 27.5 mpg might better represent the ''maximum feasible'' level for the passenger car fleet. By statute, NHTSA was prohibited from considering any change between MYs 1996 and 2004.

CAFE standards should be for future years.

The NAS found that to minimize financial impacts on manufacturers, their suppliers, their employees and consumers, sufficient lead-time (consistent with normal product life cycles) should be given when considering increases in CAFE standards. The report stated that there are advanced technologies that could be employed, without negatively affecting the automobile industry, if sufficient lead-time were provided to manufacturers. In the NAS'' view, the selection of future fuel economy standards will require uncertain and difficult trade-offs among environmental benefits, vehicle safety, cost, energy independence, and consumer preferences.

All but two members of the NAS committee concluded: ''the downweighting and downsizing that occurred in the late 1970s and early 1980s, some of which was due to CAFE standards, probably resulted in an additional 1300 to 2600 traffic fatalities in 1993.'' (NAS, pp. 3, 111.) Specifically, the Committee concluded, ''to the extent that the size and weight of the fleet have been constrained by CAFE requirements' those requirements have caused more injuries and fatalities on the road than would otherwise have occurred.'' (NAS, p. 29). The NAS also suggested that changing the CAFE regulatory program to one based on vehicle attributes, such as weight, could eliminate the current CAFE program's encouragement of ''downweighting'' or the production and sale of more small cars. In addition, ''credit trading'' would also reduce costs. (NAS, pp. 5, 113)

In a letter dated July 10, 2001, Secretary of Transportation Norman Y. Mineta asked the House and Senate Appropriations Committees to lift the restriction prohibiting agency expenditures for the purposes of considering CAFE standards. The Department of Transportation and Related Agencies Appropriations Act for FY 2002 (Pub. L. 107–87), which was enacted on December 18, 2001, contained no provision restricting the Secretary's authority to prescribe fuel economy standards. NHTSA began work towards the establishment of light truck CAFE standards, and has since set standards applicable to light trucks for MYs 2004 through 2007 (68 FR 16868).

The Department has also focused on improvements to the fuel economy program. In February 2002, Secretary Mineta asked Congress ''to provide the Department of Transportation with the necessary authority to reform the CAFE program, guided by the NAS report's suggestions.'' On February 7, 2002, the agency issued a Request for Comments (67 FR 5767) seeking, in addition to data on which to base an analysis of appropriate CAFE standards for light trucks for upcoming model years, comments on possible reforms to the CAFE program. In particular, the agency sought input on possible reforms that could enhance fuel economy, protect occupant safety, advance fuel-efficient technologies, and obtain the benefits of market-based approaches. In the rulemaking establishing light truck CAFE standards for MYs 2005–2007, the agency restated its intention to pursue the potential for such reforms.

The agency is also issuing, along with this notice, a request for comments seeking information on future product plans and other matters to assist in assessing the potential impacts of any changes to the CAFE program.

II. Why CAFE Reform?

There are four prominent criticisms of the light truck CAFE program. They relate to energy security, traffic safety, economic practicability, and modernization of the definition and classification of light trucks.

First, concern has been raised that the energy-saving potential of the CAFE program is hampered by the current regulatory structure. The difference between the fuel economy standards for passenger cars and light trucks (27.5 mpg and 20.7 mpg, respectively in 2004) encourages vehicle manufacturers to offer vehicles classified as light trucks for purposes of CAFE. In addition, the CAFE program currently applies to vehicles with a gross vehicle weight rating (GVWR) of less than 8,500 lbs, encouraging manufacturers to offer products with a GVWR larger than this limit. Reconsideration of these classification rules may encourage the development of a relatively more fuel efficient fleet of vehicles.

CAFE reform may also encourage more companies to pursue strategies to comply with established CAFE standards instead of paying fines for non-compliance. Some manufacturers regularly pay penalties rather than comply with the standards. To date, the U.S. Treasury has collected over $600 million in CAFE penalties, averaging more than $33 million in the past ten years. A different CAFE system might induce more vehicle manufacturers to innovate with fuel-saving technologies rather than pay fines for noncompliance.

Second, concern has been raised that the current light truck CAFE standards could create safety risks by encouraging vehicle manufacturers to achieve greater fuel economy by downweighting their light truck offerings. As the NAS report and a more recent NHTSA study have found, downweighting of the light truck fleet, especially those trucks in the low and medium weight ranges, creates more safety risk for occupants of light trucks and all motorists combined. However, both studies also suggest that if downweighting is concentrated on the heaviest light trucks in the fleet there could be a small fleetwide safety benefit. An alternative CAFE system may allow more energy savings while protecting and enhancing the safety of the motoring public.

As recommended by the NAS Report, NHTSA has updated its 1997 size and safety study and placed this updated report in the docket for technical comment. The NHTSA study considered the historical fatality statistics of model year 1991–1999 vehicles to find the average fatality increase per 100-pound reduction. This ''fatality increase per 100-pound reduction'' does not mean the effect of literally removing 100 pounds from a specific vehicle. It is the average increase in the fatality rates of 1991–99 models weighing W–100 pounds curb weight relative to other 1991–99 models weighing W pounds curb weight, given drivers of the same age/gender, and accounting for a variety of other factors.

In cars weighing [3] 2,950 pounds or more, overall fatality rates increased by an average of 1.98 percent per 100-pound weight reduction. If this percentage effect were applied to the baseline of all calendar year 1999 crash fatalities in the U.S. it would be equivalent to an increase of 216 fatalities per year. In cars weighing less than 2,950 pounds, the average increase in the fatality rate per 100-pound weight reduction was 4.39 percent, equivalent to 597 fatalities per year.

The findings were similar for light trucks. In light trucks weighing less than 3,870 pounds, the average increase in the fatality rate per 100-pound weight reduction was 2.90 percent, equivalent to 234 fatalities per year. In light trucks weighing 3,870 pounds or more, the average increase in the fatality rate per 100-pound reduction was 0.48 percent, equivalent to 71 fatalities per year.[4]

The study also found that trucks, starting with those weighing around 5,000 pounds (this number is an approximate arithmetic mean of the possible safety break points identified in

[3] The weights in the size and weight study are curb weights, whereas those in the context of CAFE standards are gross vehicle weights.

[4] The increase is not statistically significant, since the study provides an interval estimate from -1.06 to +1.64 percent.

the study) and including those that were heavier, would have actually reduced fatalities by a small amount if their weights were reduced. Therefore, as cars and trucks increased in size, the severity of the safety impacts due to weight reduction lessens and eventually disappears. For vehicles above a certain weight, weight reduction may produce safety benefits.[5]

The NHTSA study approach is retrospective, and not necessarily predictive of the future, since it examines a specific group of model year 1991–99 vehicles, often in relation to the other vehicles on the road, in calendar years 1995–2000. The study does not examine a reduction of 100 pounds in a specific vehicle, but rather the effect of a vehicle mix shift resulting in the average vehicle fleet being 100 pounds lighter. For light trucks, a change in the sales mix to certain vehicles (*e.g.*, minivans) could reduce weight, improve fuel economy and be safer for society overall. Even within vehicle classes we already see the potential for overall safety improvements (*e.g.*, crossover SUVs are lighter, more fuel efficient, and appear to be safer for society overall than larger SUVs).

It is important to note that the configuration of light vehicles, particularly the height of their center-of-gravity (CG), also has an impact on safety. In particular, vehicles with a higher CG are more likely to be involved in rollover crashes than vehicles with a lower CG. About one-third of all light vehicle occupant deaths involve rollover. More than half of all single vehicle crashes resulting in fatalities involve a rollover event. Fatalities in rollover crashes accounted for 82 percent of the total fatality increase in 2002. In 2002, 10,666 people died in rollover crashes, up 5 percent from 10,157 in 2001. The number of persons killed in SUVs that rolled over rose 14 percent. Sixty-one percent of all SUV fatalities involved rollovers.

The NAS found that ''technologies exist that, if applied to passenger cars and light trucks, would significantly reduce fuel consumption within 15 years (NSA, pp. 3). NAS also noted that technology changes require very long lead times to be introduced into product lines. Under the current regulatory structure, rapid increases in the light truck CAFE standard could have substantial safety and economic consequences. An analysis performed by the Energy Information Administration (EIA), based on their National Energy Modeling System (NEMS), indicates that if the light truck CAFE standard were increased by 0.6 mpg annually under the current system starting with MY 2008 (0.6 mpg was the rate of increase for the last two MYs of the recently published MY 2005–2007 CAFE light truck rule), average light truck weight would be reduced by about 100 pounds annually over the MY 2010–2015 period, about 200 pounds annually over the MY 2016–2020 period, and more than 350 pounds annually by MY 2025. Moreover, the study suggests that most of the weight reduction would occur in the small and medium end of the weight range. The EIA analysis and NHTSA's updated safety study together suggest that highway fatalities could increase significantly if such increases in CAFE standards for light trucks are implemented under the existing program.

A third reason for considering CAFE reform relates to the adverse economic impacts that may result from such future increases in the stringency of CAFE standards. The EIA analysis predicts that a sustained gradual increase in the light truck standard (0.6 mpg per year from 2007 to 2025) would increase the cost of light trucks, reduce real Gross Domestic Product (GDP), and reduce employment. The incremental cost of light duty trucks is predicted to rise steadily for the entire forecast period through 2025, ultimately reaching a price increase of $720 (in constant 2001 dollars), although the rate of increase slows over time. The loss in real GDP grows over time. By 2015, real GDP is predicted to be $15 billion smaller, which represents a loss of 0.1 percent when compared to the reference case. By 2025, the loss in GDP is predicted to be $19 billion (−0.10 percent). Viewed over the entire forecast period, the sum of the discounted changes (billions of dollars discounted at 7 percent from 2004 through 2025) in real GDP totals a loss of $84 billion, which represents a loss of approximately 0.6 percent of the reference case value of real GDP over the 2004–2025 period. Non-agricultural employment, under such a scenario, would decline in 2015 by 86,000 jobs compared to no increase in light truck CAFE standards. This adverse effect would attenuate in the long run as fuel savings from tighter CAFE standards induce some employment gains and the economy adjusts to a new steady-state equilibrium. By 2025, the net employment loss in the non-agricultural sector is 16,000 jobs.

Although the NEMS model is useful as a long term forecasting tool, the model is a simplified representation of the macro-economy and its projections are subject to considerable uncertainty. NEMS is a generalized model that treats all manufacturers identically. Other approaches, such as the technology model used by NHTSA in its recent 2005–2007 light truck rulemaking, rely heavily on detailed manufacturer-specific data. Models of this type have advantages for analyzing the effects of short-term modest increases in CAFE standards, while the NEMS approach is more useful for analyzing longer-term increases in CAFE standards. When longer-term analysis of significant increases in CAFE standards is required, current differences in manufacturer capabilities become much less relevant. In addition, NEMS' ability to estimate macroeconomic ''feedbacks'' from long run increases in CAFE standards is useful.

Table 1 provides data on light truck manufacturers in the U.S. market, their sales volumes, and market shares by vehicle type.

BILLING CODE 4910–59–P

[5] This new study explores the relationship between vehicle size, crash compatibility and vehicle weight for 1991 through 1999 light vehicles. The study finds that weight reductions in passenger cars and most light trucks increase the risk of fatalities significantly more than previously thought. However, the results are not uniform over the entire weight range of trucks and cars. Reducing the weight of lighter cars and trucks results in more fatalities than down-weighting heavier cars and trucks.

Table 1
U.S. Sales, Market Share, and Production Data for Major Light Truck Manufacturers*

Mfg.		Total	<3,100 lb	3,101 to 3,400 lb	3,401 to 3,700 lb	3,701 to 4,000 lb	4,001 to 4,300 lb	4,301 to 4,600 lb	4,601 to 4,900 lb	>4,901 lb	North American Built	Domestic Content
GM	Sales	2,412 K	41 K	88 K	101 K	256 K	188 K	390 K	363 K	985 K	100 %	90 %
	Share	30 %	16 %	15 %	13 %	26 %	12 %	32 %	44 %	55 %		
Ford	Sales	2,060 K	59 K	106 K	285 K	118 K	410 K	493 K	237 K	352 K	98 %	81 %
	Share	26 %	23 %	18 %	36 %	12 %	27 %	40 %	28 %	20 %		
DCX	Sales	1,772 K	0	178 K	70 K	293 K	575 K	172 K	140 K	344 K	100 %	79 %
	Share	22 %	0 %	31 %	9 %	30 %	38 %	14 %	17 %	19 %		
Toyota	Sales	747 K	117 K	16 K	198 K	162 K	50 K	66 K	43 K	95 K	59 %	37 %
	Share	9 %	46 %	3 %	25 %	16 %	3 %	5 %	5 %	5 %		
Honda	Sales	336 K	29 K	109 K	0	0	149 K	49 K	0	0	64 %	46 %
	Share	4 %	7 %	19 %	0 %	0 %	10 %	4 %	0 %	0 %		
Nissan	Sales	287 K	0	35 K	5 K	121 K	114 K	12 K	0	0	69 %	40 %
	Share	4 %	0 %	6 %	1 %	12 %	8 %	1 %	0 %	0 %		
Isuzu	Sales	79 K	0	6 K	5 K	42 K	18 K	8 K	0	0	78 %	47 %
	Share	1 %	0 %	1 %	1 %	4 %	1 %	1 %	0 %	0 %		
Hyundai	Sales	83 K	0	0	83 K	0	0	0	0	0	0 %	1 %
	Share	1 %	0 %	0 %	10 %	0 %	0 %	0 %	0 %	0 %		
Suzuki	Sales	51 K	6 K	10 K	35 K	0	0	0	0	0	46 %	15 %
	Share	1 %	2 %	2 %	4 %	0 %	0 %	0 %	0 %	0 %		
Kia	Sales	97 K	0	30 K	17 K	0	0	0	50 K	0	0 %	0 %
	Share	1 %	0 %	5 %	2 %	0 %	0 %	0 %	6 %	0 %		
BMW	Sales	39 K	0	0	0	0	0	31 K	0	8 K	100 %	35 %
	Share	>1 %	0 %	0 %	0 %	0 %	0 %	3 %	0 %	>1 %		
VW	Sales	11 K	0	0	0	0	10 K	0	0	1 K	0 %	1 %
	Share	>1 %	0 %	0 %	0 %	0 %	1 %	0 %	0 %	>1 %		
Total		7,974 K	252 K	578 K	799 K	992 K	1,514 K	1,221 K	833 K	1,785 K		

* Sales data from NHTSA's CAFE Database for MY 2002. Percent North American Built are data from 2002 calendar year from Automotive News 2003 Market Data Book. Domestic content percentages were calculated using AALA Reports and sales data from NHTSA's CAFE Database for MY 2002. All weight ranges listed in the table signify curb weights.

BILLING CODE 4910–59–C

As stated by NAS, the current structure of the CAFE program favors manufacturers with a product mix dominated by small light trucks and disfavors manufacturers with a full line of light trucks or those with a product mix that is dominated by heavier trucks. The potentially adverse effects of tighter light truck CAFE standards on the economic vitality of the auto industry can be seen by ranking vehicle manufacturers by their current CAFE averages and their average fuel economy ratings within weight classes. The fuel economy data in Table 2 suggest that reform toward a weight-class system will affect both domestic and foreign manufacturers. For example, within weight classes, GM vehicles generally rank high in overall fuel economy, while DaimlerChrysler vehicles do not rank high in several heavier weight classes. Similarly, Honda ranks high in the weight classes where it has substantial volume while Toyota products do not rank as high in fuel economy in several weight classes. These data are only for one model year but such trends are likely to continue in the near term. In the long run, all manufacturers will have sufficient lead time to make new product offerings under a reformed system.

The vulnerability of full-line firms to tighter CAFE standards does not arise primarily from poor fuel economy ratings within weight classes. Their overall CAFE averages are low compared to manufacturers that produce more relatively light vehicles because their sales mixes comprise a much larger quantity of bigger and heavier vehicles. For example, within given weight classes, the average fuel economy average of GM vehicles weighing in excess of 3,400 lbs. curb weight is actually greater than Toyota's. Yet, Toyota's overall fuel economy average, across all weight classes over 3,400 lbs., is greater than GM's due to the fact that Toyota sells more vehicles in the lower weight classes than GM does and because GM's market share in the three heaviest classes is so large. An attribute-based (weight and/or size) system could neutralize disparate impacts on full-line manufacturers that could result from a sustained increase in CAFE standards. NHTSA seeks comment on these economic concerns, which ultimately relate to the economic practicability of more stringent light-

truck CAFE standards. We also seek comment on potential reforms that could reduce or eliminate these adverse economic effects.

TABLE 2

Manufacturer	<3,100 lb.	3,101 to 3,400 lb.	3,401 to 3,700 lb.	3,701 to 4,000 lb.	4,001 to 4,300 lb.	4,301 to 4,600 lb.	4,601 to 4,900 lb.	>4,901 lb.	Overall mpg
GM	29.8	25.7	23.1	24.7	21.2	20.3	19.6	18.0	19.9
Ford	28.8	24.8	23.0	20.0	21.1	19.6	19.1	17.5	20.3
DaimlerChrysler	N/A	25.5	19.5	21.1	22.3	20.6	18.1	16.9	20.4
Toyota	29.0	28.3	22.6	23.4	20.5	19.3	18.0	17.8	22.1
Honda	29.7	27.8	N/A	N/A	24.0	22.6	N/A	N/A	25.3
Nissan	N/A	26.2	24.3	20.6	19.5	19.0	N/A	N/A	20.7
Isuzu	N/A	22.4	22.5	21.2	20.7	19.5	N/A	N/A	21.0
Hyundai	N/A	N/A	24.5	N/A	N/A	N/A	N/A	N/A	24.5
Suzuki	23.3	22.4	21.4	N/A	N/A	N/A	N/A	N/A	21.8
Kia	N/A	23.3	23.0	N/A	N/A	N/A	19.8	N/A	21.4
BMW	N/A	N/A	N/A	N/A	N/A	20.3	N/A	17.5	20.2
VW	N/A	N/A	N/A	N/A	20.6	N/A	N/A	20.0	20.6
Total	29.0	25.7	22.7	22.1	21.6	20.1	19.1	17.7	20.6

Light Truck Fuel Economy (mpg) by Weight Class (lbs.) for MY 2002

A fourth reason for considering CAFE reform is to modernize the definitions and classifications of light trucks within the program. The markets for, and designs of, cars and light trucks have changed substantially since the inception of the CAFE program in the late 1970's. The existing CAFE program creates a bright line distinction between passenger and non-passenger automobiles (light trucks) and that distinction—found in both the statute and subsequent rulemakings—reflects the vehicle fleet prevalent in the 1970's.

Since then, the American public has resoundingly responded to the development of new types of vehicles, such as minivans and sport utility vehicles (SUVs). As compared to traditional passenger cars, these multipurpose vehicles are better able to satisfy the demand for family transportation, cargo carrying capability and recreational use. The market for traditional pick-up trucks has also expanded, giving rise to a broader variety of sizes, performance abilities and uses.

The market suggests that while some light trucks may be used primarily to transport passengers, their ''peak use or value'' capability (towing boats, hauling heavy loads, etc.) may be a critical factor in the purchase decision. In other words, a consumer may require substantial towing capability only periodically, but nevertheless may base his purchasing decision on a vehicle's ability to meet that peak need rather than his daily needs. The motor vehicle market has thus developed a demand for vehicles capable of cross-servicing traditional needs—that is, for vehicles capable of transporting people and cargo, for vehicles capable of servicing personal transportation needs as well as recreational and commercial ones, and for vehicles capable of substantial performance, even if such performance is only needed periodically.

While minivans, SUVs and pick-up trucks dominated the market of the 1990s, ''crossover'' vehicles are an emerging motor vehicle trend. Many of these vehicles reverse some of the adverse consequences of the past vehicle fleet. As previously mentioned, they tend to be smaller, lighter, potentially more fuel efficient and designed with lower centers of gravity than the more traditional light trucks of the 1990s.

Any potential reforms to the CAFE system should be considered in light of their ability not only to enhance fuel economy but also to ensure the economic well-being and safety of the American public. In considering CAFE reforms, our aim is to develop a CAFE program consistent with, and not in any way adverse to, our economic and safety objectives.

III. Comments to Date on CAFE Reform

In February 2002, NHTSA issued a request for comments (RFC) seeking information, views and data regarding future fuel economy standards and potential changes to the CAFE program. Published in the **Federal Register** on February 7, 2002 (26 FR 5767; Docket No. 2002–11419), the RFC requested comments on the recommendations in the National Energy Policy, the conclusions found in the NAS report on fuel economy, and the technical, economic and regulatory obstacles to improvements in fuel economy. The RFC sought to elicit comments on possible reforms to the CAFE program, as it applies to both passenger cars and light trucks, with an eye toward protecting passenger safety, advancing fuel-efficient technologies, and obtaining the benefits of market-based approaches.

We have received comments relating to CAFE reform both in response to the RFC and in response to our Notice of Proposed Rulemaking to establish light truck fuel economy standards for MYs 2005–2007.[6] (Docket No. 2002–11419, Notice 2) Many argued for a variety of amendments to the current system and others argued against any form of reform—whether through revisions to the current regulatory scheme or more fundamental changes in the way corporate average fuel economy is measured and applied.

While we have considered these comments, the original RFC was quite general and the comments received tended to focus on the various alleged shortcomings of the current program—

[6] We received comments from, amongst others, Public Citizen, Insurance Institute for Highway Safety (IIHS), Sierra Club, American Council for an Energy-Efficient Economy (ACEEE), Union of Concerned Scientists (UCS), Alliance to Save Energy (Alliance) and Coalition for Vehicle Choice (CVC), the Recreation Vehicle Industry Association (RVIA), Japan Automobile Manufacturers Association, Inc. (JAMA), National Truck Equipment Association (NTEA), National Automobile Dealers Association (NADA), Association of International Automobile Manufacturers, Inc. (AIAM), Alliance of Automobile Manufacturers (AAM), and Rubber Manufacturers Association (RMA). Manufacturers filing comments included General Motors (GM), Daimler Chrysler (DC), Ford Motor Company (Ford), Toyota Motor Corporation (Toyota), American Honda Motor Company (Honda) and Nissan North America (Nissan). A number of individuals also provided comments—Marc Ross from the University of Michigan both individually (Ross) and in conjunction with Tom Wenzel from the Lawrence Berkeley National Laboratory (Wenzel and Ross) and a class from Harvey Mudd College Engineering Department; Professor Patrick Little, Hans Meyer, Leryn Gorlitsky, Naomi Tomimatsu, Jordan Kwan, Anna Olson, Chris Holcomb, and Carman Ng.

or the generic admonishment against CAFE reform—and not on specific potential options or the various findings necessary to adopt them. This document, while not espousing any particular form of reform, seeks more specific input on various options set forth in an effort to adapt CAFE to today's vehicle fleet.

A brief review of the comments relating to CAFE reform already received follows:

A. Attribute-Based Standards

Our request for comments sought information on adopting an attribute-based system under which fuel economy standards would be tied to some vehicle attribute or attributes rather than having one fixed standard for passenger automobiles and another for light trucks. With some notable exceptions, many commenters supported adopting attribute-based fuel economy standards.

While private citizens generally favored attribute-based standards, a number of interest groups did not. Manufacturers and trade associations viewed them with caution. Public Citizen, Sierra Club, ACEEE, and UCS expressed concern that an attribute-based system may give manufacturers an incentive to increase production of vehicles in the attribute class with the lowest fuel economy. If an attribute system were to be used, ACEEE opposed weight-based standards and recommended consideration of an interior volume-based system stating that weight-based standards would provide automakers with an incentive to add mass to trucks in order to lower the fuel economy requirements for those vehicles. Professor Patrick Little suggested consideration of attributes that more accurately reflect likely usage of a vehicle, such as a ratio of unenclosed cargo space to passenger seating, in order to properly distinguish between passenger vehicles and light trucks and to avoid minivan/SUV loopholes that would incorrectly place these vehicles in the light truck category.

Other commenters favored an attribute-based system. IIHS favored a system of fuel economy requirements indexed to weight, although it commented that the CAFE structure must be modified to ensure that increased fleet fuel economy does not come about through weight reductions of the lightest, least safe vehicles or through increased sales of those vehicles. The organization stated that such a system would remove downweighting as a means of compliance and force the use of new technologies. IIHS also suggested that an attribute system could be established requiring each automaker to meet a manufacturer-specific, production-weighted average derived from the specific combination of vehicle types/weights sold by the automaker. This could be accomplished, according to IIHS, by the agency determining the target fuel economy for each vehicle weight, with the sum of any manufacturer's deviations from the target having to be zero or negative.

Carman Ng suggested that an attribute-based system could include power to weight ratio, number of cylinders, coefficient of drag, maximum recommended load, engine type, fuel sources, and number of passengers as attributes to be considered because these attributes can be measured quantitatively and avoid the gray areas of qualitative judgment. The Coalition for Vehicle Choice advised caution, arguing that there are no universal ''bright lines'' along which vehicles may be grouped.

DaimlerChrysler and Toyota objected to adoption of an attribute-based system, arguing that no method discussed as of that time is superior to the current system. Toyota added that a weight-based system, wherein lighter vehicles would be required to meet a more stringent standard than heavier vehicles, would result in ''up-weighing'' and increased fuel consumption. Ford and Nissan indicated that a weight based attribute system would be more equitable than the current system because vehicle weight directly correlates to vehicle fuel consumption. Ford also stated that it continues to believe that uniform industry fuel economy standards are inefficient and unfairly penalize full line manufacturers.

GM did not support use of a weight based attribute system, but both GM and Ford stated that a well-designed attribute-based system would be an improvement in that it would make sales mix less of a factor in meeting the standards. GM further indicated that a weight-based system would promote safety by removing incentives to remove weight.

Honda stated that there were several advantages to a size-based system as opposed to a weight-based system, including preserving incentives for fuel economy improvements through use of lightweight materials and improved vehicle packaging, less susceptibility to erosion of overall fleet economy, and safety. AIAM did not favor a weight or attribute-based system but believes that whatever system is chosen should be competitively neutral. In general, while some manufacturers believed a weight-based system had merit, there was considerable concern that the uncertainties of such a system might have untold effects.

B. Increasing GVWR Limit on Vehicles Subject to CAFE Standards

An issue relating to classification is the size of vehicles subject to CAFE. We noted in the RFC that one aspect of the growth in the light truck fleet has been the appearance of increasing numbers of large SUVs whose GVWR is above the current CAFE upper weight limit of 8,500 pounds. We asked commenters to provide us with views and data relating to raising the CAFE limit to the statutory maximum of 10,000 pounds GVWR to include larger vehicles in the light truck fleet. There was a general split between consumer groups and industry on whether expanding the scope of the CAFE program to encompass larger trucks is advisable.

Public Citizen supported the expansion. Citing the GVWRs of several larger SUVs as alleged examples of how manufacturers made the vehicles just large enough to escape regulation, Public Citizen argued that both safety considerations and the need to conserve energy dictated that larger vehicles should be subject to CAFE. Similarly, the ACEEE, 20/20 Vision, and Sierra Club also supported expanding the CAFE program's coverage to reach these larger vehicles, arguing that many of the large SUVs and pickup trucks are used as passenger vehicles (ACEEE). Chris Holcomb states that expanding CAFE would increase safety as manufacturers would discontinue production of vehicles at the high end of the weight range due to an inability to make them fuel efficient.

With the exception of Honda, manufacturers did not support the expansion. They argue that most trucks in this category are domestically built to meet a special need for the commercial consumer needing heavy-duty pick-up truck capabilities for heavy cargo or passenger (more than six passenger) load. They stated that only a small fraction of these vehicles are SUVs and many of them were purchased to tow heavy loads.

General Motors argued that raising the maximum GVWR for CAFE would severely damage domestic manufacturers and exacerbate the problems and inequities created by the CAFE program. Moreover, GM attacked the premise that these large vehicles should be considered because they are passenger vehicles by noting that models within the 8,500–10,000 pound segment have ''sisters'' or twins with

equivalent passenger carrying capability in the under 8,500 pound category. GM stated that customers interested in passenger capacity would not be interested in the heavier models, which cost more to purchase and operate and that the heavier vehicles are used and purchased by consumers needing features found only in these vehicles.

DaimlerChrysler opposed the expansion on the basis that it would not produce a demonstrable benefit. According to DC, the market segment involved is so small that no significant fuel savings would be realized by including large vehicles in the CAFE fleet. In DC's view, such action would only serve to lower the truck fleet fuel economy average.

The AAM, Ford, NTEA, and RVIA echoed the views of GM and DC. These organizations argued that expansion of the CAFE program into the heavier weight category would be unwarranted and unwise. Large vehicles, according to the Alliance, meet consumer needs and including these large vehicles in the CAFE fleet would force manufacturers to stop producing them or otherwise compromise the characteristics making them desirable to consumers.

C. Vehicle Classification

The agency's request for comments observed that the tremendous changes in the light truck market compelled reexamination of the definitions of light trucks and passenger automobiles. We asked commenters to provide suggestions for modifications of the vehicle classification scheme now used in the CAFE program. In particular, we requested that commenters identify characteristics that would help delineate the differences between passenger automobiles and trucks and the pros and cons of various classification schemes.

Public interest groups responding to this request were highly critical of the existing classification scheme, particularly the ''flat floor'' provision allowing vehicles (such as the PT Cruiser and many minivans) to be classified as light trucks based on the ability to enlarge their cargo carrying capacity by physically changing their passenger carrying ability into cargo carrying ability. The ACEEE and Sierra Club object to the ''flat floor'' provision, but without offering any specific recommendations for a new definition.

Public Citizen also criticized the current classification scheme and offered its view that the light truck class should be restricted to vehicles with significant off-road characteristics, such as a very high ground clearance, or more commercial ''truck-like'' qualities, such as the ability to carry or tow their own weight. In Public Citizen's view, the truck category should be limited to vehicles that are used commercially rather than lighter truck-like vehicles that may also serve as personal transportation.

Vehicle manufacturers and industry trade groups generally offered an opposite view—the existing classification system provides appropriate differentiation between passenger and non-passenger automobiles. This judgment is based on the view that the expansion of the light truck market has stemmed solely from consumer demand for more versatile and larger vehicles. DaimlerChrysler indicated that moving truck-like ''passenger vehicles,'' such as SUVs and minivans, from the truck fleet to the car fleet would require making the car standard less stringent or result in the elimination of an entire category of vehicle that consumers obviously value.

Alternatively, in its response to the RFC, DC indicated that an attribute-based approach to segment the fleet might have advantages.[7] However, DC indicated that no classification system was ideal and all systems would have their own set of rewards and drawbacks.

Ford supported the existing scheme in response to the request for comments. According to Ford, light trucks, including SUVs, are purchased and used for different reasons than passenger automobiles. Ford stated that the utility and corresponding differences between passenger automobiles and light trucks should be carefully considered before implementing any vehicle classification modifications. Ford argued that removing SUVs, minivans, and multi-activity vehicles from the truck fleet and adding them to the car fleet, or even creating a third category would negatively impact both the car and truck CAFE compliance, and might also have negative safety consequences.

GM similarly stated that no change in the system of vehicle classification is necessary. Although some vehicles have been introduced that combine various car-like and truck-like features, GM believes that the distinction between passenger automobiles and trucks has not been removed.

Toyota stated that all manufacturers should be subject to the same set of standards for any given category, class, fleet or similar set of vehicles regulated under any type of CAFE program. Further, Toyota argued that NHTSA should not restructure the current CAFE system in such a way that would provide a disincentive for companies to achieve greater fuel economy than required.

Honda stated that SUVs and vans should be removed from the truck fleet. In addition, Honda asserted that large pick-up trucks are often used for work purposes, but adds that any exemption criteria, with respect to pick-up trucks, should include a minimum bed width and length. AIAM commented that weight or size based systems could either be incorporated into a continuous function or market segment classes in an attempt to reconcile the truck/passenger car distinction.

A number of individuals also responded to this question. Jordan Kwan suggested dividing the fleet into a separate and third category to include SUVs, minivans and extended cab pick-up trucks as light trucks used primarily for transporting passengers. Hans Meyer states that the classification of light trucks should be further broken down into subcategories by separating SUVs and minivans from pick-up trucks. He argues that manufacturers would have to improve the fuel efficiency of SUVs rather than use more fuel-efficient pick-up trucks to raise the average and suggests using passenger-seating space as a measurement to differentiate between the subclasses.

D. Credit Availability

The RFC also sought comments on the possibility of manufacturers being allowed the opportunity to trade fuel economy credits—either with each other or by averaging their own credits across different classes of their own vehicles. The use of credits in these ways was not well received by public interest groups, while industry generally viewed it favorably.

The Sierra Club outright opposed these uses of credits citing automakers' history of ''gaming'' the current credit program. ACEEE, Little, Gorlitsky, and Ng stated that cross-class averaging should not be permitted. Public Citizen suggested that any initial system should be designed conservatively so as not to create unexpected loopholes and was opposed to linking credits to a broader greenhouse gas reduction registry or credit system. The group was also concerned that allowing such uses of credits could jeopardize the effectiveness of penalties.

Some industry members and trade groups believe credit averaging and

[7] However, in its comments to the light truck NPRM, DC was more cautious of any effort to reform the CAFE program, stating: ''No method to modify CAFE that has been described in the literature or discussed in the political debate is clearly superior to the current CAFE system in ensuring energy savings or a fair distribution of tasks.''

trading would improve the CAFE program by offering manufacturers a means of dealing with unexpected conditions and events. For example, AIAM noted that credit averaging between classes and between companies could provide manufacturers with increased compliance flexibility in dealing with unanticipated market shifts. AIAM also argued that a broad credit trading system would provide a strong incentive for manufacturers to earn credits through voluntary fuel economy improvements since there would be a strong likelihood that buyers would exist for the earned credits.

DaimlerChrysler and Toyota supported credit trading for the same reasons. In addition, Honda believes that credit trading between companies in other sectors of the market would increase competitive bidding and pricing of the credits. However, Ford opposed a credit trading system on the basis that such a system would likely cause a transfer of wealth from domestic full line manufacturers to foreign companies.

Although GM expressed reservations about NHTSA's authority to permit credit trading, the company indicated that a broad credit trading system would prompt all manufacturers to exceed CAFE standards. Nissan and Honda both applauded the flexibility that a broad-based credit-trading program would introduce into the CAFE program. Nissan believed that credit trading would encourage innovation by allowing manufacturers the ability to risk the use of new technologies.

E. Two-Fleet Rule

Under what is known as the ''two-fleet rule,'' manufacturers must, for CAFE purposes, place their domestically manufactured vehicles and non-domestically manufactured vehicles in separate fleets. Commenters, especially domestic manufacturers, generally expressed the view that the elimination of the two-fleet rule would not have major impacts on manufacturer actions. More specifically, the Alliance of Automobile Manufacturers suggested that this scheme might have encouraged the sourcing of non-domestic parts. Foreign manufacturers and trade associations generally believe the two-fleet rule is outdated and may constitute a trade barrier.

F. Separate Standards for Cars and Light Trucks

All public interest groups and individuals who commented believe that separate standards for cars and light trucks do not have any practical value under the CAFE standards. Sierra Club, ACEEE, IIHS, and PIRG called for the elimination of separate standards and advocated combining passenger automobiles and light trucks into a single class. IIHS suggested a single CAFE standard indexed to weight and cargo capacity. Public Citizen recognized that the car and truck fleets might not be combined absent Congressional authority, but stated that the loophole could be closed by substantially increasing the fuel standards for light trucks. If the rule is not eliminated, Public Citizen recommended utilizing a different set of criteria in distinguishing passenger automobiles from light trucks, such as ground clearance, four-wheel drive capacity, and/or tow weight.

G. Uniform Percentage Increase

While not addressed specifically in the RFC, the NAS study discussed a Uniform Percentage Increase (UPI) approach that would require every manufacturer to increase its current CAFE level by a specific percentage. Toyota, AIAM and AIADA opposed any efforts to adopt a uniform percentage improvement format. Toyota argued that UPI encourages manufacturers to ''rush to the bottom'' and violates that concept of ''same vehicle, same standard.'' AIAM stated that a system that is fair and equitable to all manufacturers is one that applies the same standards to all manufacturers at the same time. AIADA argued that the UPI approach penalizes auto manufacturers who historically have made the greatest commitments to improving fuel economy.

Similarly, the Alliance and DaimlerChrysler asserted several negatives to a UPI approach including penalizing manufacturers for early CAFE improvements, not accounting for fleet mix changes, focusing only on new vehicles, not affecting consumer behavior, and impacting manufacturers differently.

IV. The EPCA and CAFE Reform

In its January 2002 report, the NAS suggested a number of reforms, including: applying an attribute-based system to a combined car and light truck fleet, creating a credit trading program between manufacturers, and eliminating the two fleet rule for foreign and domestic content. The agency does not believe that the EPCA provides it with the authority to implement such reforms. However, on February 1, 2002, Transportation Secretary Norman Mineta wrote a letter to Congress requesting the necessary authority to reform the CAFE program, guided by the NAS report's suggestions. While Congress has not yet provided such express statutory authority, there have been legislative proposals that would require the agency to consider the NAS report when establishing CAFE standards.

Unlike many statutes, the EPCA is a particularly prescriptive one. It contains a number of provisions providing specific definition and structure to the CAFE program. We set forth below those aspects of any CAFE program we tentatively believe to be required by the EPCA. However, we seek comment on whether the EPCA provides us with more or less authority to implement potential reforms to the CAFE program.

Our review leads us to believe that the language and structure of the EPCA requires that we state any CAFE standard in terms of ''miles per gallon,'' that a CAFE standard for a class of any particular model year be considered as an ''average,'' and that we apply a single standard for all passenger automobiles. The statute provides more flexibility to establish classes of vehicles within the light truck category than is the case with passenger automobiles.

The statute defines ''fuel economy'' in Section 32901(10) as the average number of miles traveled by an automobile for each gallon of gasoline used. The fuel economy of individual vehicle models is measured in accordance with procedures established pursuant to Section 32904(c).[8] For passenger automobiles, but not light trucks, Section 32904(c) commands that testing and measurement procedures be the same as used in 1975. This data is then used to derive a manufacturer's average fuel economy level for each fleet. For passenger automobiles, Section 32904(a)(1)(B) requires use of a formula that results in derivation of the harmonic sales weighted average of a manufacturer's fleet. For light trucks, Section 32904(a)(1)(A) provides that a manufacturer's average fuel economy shall be calculated pursuant to a formula established by regulation.[9]

[8] Credit, penalty and alternative fuel incentive provisions are all predicated on the use of miles per gallon as a basic measure of fuel use. Because the statutory scheme relies on mpg as a basic unit of measure, we tentatively believe that any standard should either rely on mpg or be readily converted to a mpg measurement.

[9] The House Report for the Cost Savings Act suggests that Congress, while not mandating it, expected that a similar procedure would be used for light trucks: ''Average fuel economy (except when used with non-passenger automobiles) is a production-weighted average of the fuel economy of the manufacturer's entire production of passenger automobiles in a model year (subject to the special rules for imports). It is intended that the rules of the Secretary would provide for a similar computation for each class of non-passenger automobile.''

The EPCA expressly permits the implementation of different CAFE standards for differing classes of non-passenger automobiles (light trucks), but contains no evident corollary provision for passenger automobiles. Instead, embedded throughout the statute's terminology are references to a unified standard for passenger cars. The passenger car standard is established by statute. For non-passenger automobiles, Section 32902(a) directs the Secretary to establish average fuel economy standards and authorizes the establishment of different standards for different classes of these vehicles.

In light of these statutory constraints, the following sections present alternatives in three major areas for which the agency believes it clearly has the authority to implement reforms to the CAFE system: (1) Revising the structure of light truck standards to create differing classes of light truck CAFE requirements; (2) revising the vehicle classification definitions for determining whether a vehicle is a light truck or passenger car for CAFE purposes; and (3) increasing the weight limit for vehicles covered by CAFE standards from 8,500 lbs. GVWR to 10,000 lbs. GVWR. Although each option is presented separately on its own merits, the agency could consider combinations of various reforms. The impacts of various combinations have not been analyzed at this time. However, the agency welcomes comments regarding combinations of reforms.

V. The Structure of Light Truck Standards

In this section, two structural reforms for light truck standards are discussed. The first divides light trucks into two or more classes based on vehicle attributes. The second is an attribute-based ''continuous-function'' system, such as that discussed in the NAS report. In the discussion below, we have chosen measures of vehicle weight and/or size to illustrate the possible design of an attribute-based system. However, we also seek comment as to the merits of other vehicle attributes as the basis of an attribute-based system.

An attribute-based standard for light trucks based on vehicle weight is worthy of serious consideration for several reasons. First, a weight-based standard, by applying more stringent standards to lighter trucks, would reduce or eliminate the incentive for manufacturers to comply through downsizing, downweighting, or through offering for sale more products at the lighter end of the weight spectrum. These CAFE compliance strategies can increase safety risks and, depending on their application, could have safety implications if used with light trucks in the future. Second, a weight-based standard would provide a level playing field for manufacturers who choose a product mix tilted toward the low, middle, or heavy end of the light truck spectrum. Finally, a weight-based standard would provide an alternative basis for establishing ''maximum feasible levels'' of fuel economy, since the top performing vehicles within each weight class could, subject to mitigating factors (*e.g.*, acceleration capability and towing capacity), serve as a starting point for an analysis of the ''maximum feasible level'' of average fuel economy achievable by manufacturers competing in each weight class. Without the structure provided by weight classes, the determination of a ''maximum feasible level'' must be geared to the overall fleet.

The Japanese government is already using a simple weight-based standard to reduce fuel consumption in the transportation sector of the Japanese economy. There are eight weight classes in the Japanese system, which encompasses both cars and light trucks. Average fuel economy targets are set within each weight class, and the targets are more stringent for the lighter weight classes and less stringent for the heavier weight classes. The targets for gasoline-powered passenger vehicles were set for 2010 and represent about a 23% improvement in fuel economy compared to the 1995 baseline. Fuel economy targets are selected by a ''top runner'' method, whereby the targets for each weight class are established in part based on the best performing vehicle in that weight class. The original system was established without any opportunity for a multi-class manufacturer to average compliance across classes, as is the case in the present U.S. system (where manufacturers can ''offset'' under-compliance in one vehicle class on a one-for-one basis with over-compliance in the other). However, more recently the Japanese system was modified to allow ''offsets'' on a two-for-one basis: credits earned by a better-than-required fuel economy performance in one weight class are discounted by 50% when applied to compensate for worse-than-required performance in another weight class.

There are two basic objections to a weight-based system. The first objection is that such a system will increase the cost of compliance to manufacturers and consumers by removing the substitution of lightweight materials as a compliance strategy. Although this objection is theoretically valid, the NAS—after examining a wide range of CAFE compliance strategies—did not find the substitution of lightweight materials to be one of the more cost-effective strategies. Thus, it is not clear how important this objection will be for near-term regulatory policy.

The second objection is that a weight-based standard might not reduce fuel consumption because it will permit or cause light trucks to become larger and heavier over time. Consumers may demand larger light trucks and/or manufacturers may offer heavier light trucks if they are regulated less stringently. If more light trucks are offered in the heavier weight classes, it is theoretically possible that the overall fuel economy of the fleet would not increase significantly or might even decline under a weight-based standard. In order to prevent such an outcome, some have suggested that a weight-based standard must be accompanied by an overall fuel economy target for the entire light-truck fleet.

Although some of the fuel savings under a weight-based standard may be offset by ''upsizing'' or ''weight creep,'' it would not be wise to reject a weight-based standard on the basis of this argument alone. First, over time, the relative stringency of the standards for different weight classes can be adjusted or new weight classes created in order to dampen or eliminate any incentives to ''upsize'' into the less stringent class. Second, it is instructive to note that the Japanese government did not accompany their weight-based standards with a binding target for the entire fleet of new vehicles. It is too early to draw firm conclusions from the Japanese experience, but the early evidence suggests that the overall fuel economy of the Japanese fleet improved about 5% from 1995 to 2000, despite some upsizing trends in that fleet. Third, while vehicle manufacturers can be expected to make small, strategic adjustments in the weights of products that happen to be on the border between two weight classes, it is doubtful that they would make a vehicle significantly heavier (and possibly more expensive)—beyond what consumers demand—simply to be classified in a slightly more permissive weight class. Light truck manufacturers know that product design decisions must be made on the assumption that a particular design will be produced for at least 4 to 8 years and they know that fuel economy standards—and definitions of weight classes—could be changed during the life of a product. Finally, any strategic behavior by vehicle manufacturers would be much greater under the

current CAFE system than under a Japanese-style, weight-based standard because the compliance incentive to ''upsize'' from cars to light trucks is quite large (27.5 mpg versus 20.7 mpg in model year 2004) now and would be lessened by the creation of multiple classes of light trucks.

Although the Japanese system uses vehicle weight as the key attribute, a measure of vehicle size, such as ''shadow'' (defined as exterior length multiplied by vehicle width), warrants further examination. A size-based standard would reduce or eliminate any incentive to downsize vehicles, thus contributing to safety. Vehicle width contributes to a vehicle's stability (thereby reducing rollover risk) while vehicle length provides ''crush space'' for occupant protection. However, the empirical relationships between size and safety are less well known than the relationships between weight and safety. We seek further comments on the relative merits of a size versus weight-based approach.

A key question for attribute-based class systems is whether a manufacturer should be permitted to count superior fuel economy in one class to compensate for less-than-required fuel economy in another class. The EPCA does not directly address this issue, and the legislative history with regard to it is ambiguous. The EPCA conference committee report suggests (at p. 159) that Congress either intended that credit trading be disallowed between passenger automobiles and non-passenger automobiles or that it be disallowed between established classes of non-passenger automobiles:

> ''Any credit earned under this provision by exceeding an average fuel economy standard applicable to passenger automobiles may only be applied against a civil penalty assessed for failure to comply with an average fuel economy standard applicable to passenger automobiles. With respect to non-passenger automobiles, any credit earned under this provision may only be applied to automobiles of the same class for which the credit was earned.

The reference to ''the same class'' may imply a Congressional intent to limit credits to the particular class of non-passenger automobiles. The statute itself, however, appears to use the term more precisely to distinguish between passenger automobiles and non-passenger automobiles. Section 32903(e) states that:

> Credits for a manufacturer of automobiles that are not passenger automobiles are earned and applied to a model year in which the average fuel economy of that class of automobiles is below the applicable average fuel economy standard under section 32902(a) of this title, to the same extent and in the same way as provided in this section for passenger automobiles.

The phrase ''that class of automobiles'' appears to refer to those that are not passenger automobiles, rather than to different classes of non-passenger automobiles.

When enacted in the 1970s, the EPCA anticipated averaging among classes, or 1-to-1 credit averaging. More recent credit trading constructs, however, may advance the goals of the EPCA in ways not directly anticipated during that time. For example, a credit system like the one employed by the Japanese could advance the energy conservation objectives of the statute (by encouraging over-compliance due to the 2-to-1 ratio in credits), while providing valuable compliance flexibility to vehicle manufacturers.

Proponents of discounting credits, such as the Japanese averaging system described above, argue that discounts are beneficial because they guarantee greater fuel savings than would occur without discounting. In the Japanese example, only half the fuel economy in excess of a standard may be used to offset vehicles that would not otherwise meet the standard. The remaining half would effectively be applied to greater fuel economy. As a consequence, to the extent that manufacturers make use of averaging, the overall level of fuel economy they achieve will be greater with discounts than without, other things equal.

Opponents of discounting point out that discounting effectively functions as a tax on averaging. As such, it will reduce the amount of averaging that would otherwise take place and diminish the cost savings that averaging could provide. The magnitude of the deterrent effect of a discount is directly related to its magnitude.

The general trend in Federal averaging programs in environmental regulation is away from discounting credits. For example, the Environmental Protection Agency typically mandates discounts on averaging and trading programs only in special cases, such as to account for uncertainties in how credits are calculated or enforced. Comments on the merits of different options for averaging across vehicle classes, as well as comments on whether NHTSA has the statutory authority to consider such options, are requested.

Below we discuss in more detail a range of different attribute-based standards. We seek comment on each system presented with regard to practical considerations, such as lead-time, potential approaches to a phase-in and the treatment of credits and penalties during a transition period. We seek comment on potential ideas that would discourage or preclude the possibility of manufacturers' increasing the weight and size of their vehicles under each system, which could actually lower fleet fuel economy and—if concentrated at the high end—have negative safety implications. We also seek comments on whether other measures of vehicle utility, such as payload capacity, interior volume, number of designated seating positions, towing capacity, etc., could be utilized as attributes, and how each of these systems would possibly operate.

A. Two or More Classes of Light Trucks

With the exception of different standards for 2-wheel vs. 4-wheel drive trucks, to date the agency has not attempted to create differing classes of light trucks. The creation of two or more light truck classes might have many benefits. The use of multiple classes might allow standards to better reflect the fuel economy potential of different vehicle types. Minivans, for example, tend to have greater fuel economy than SUVs, and many SUVs have greater fuel economy than pickup trucks. A system with multiple light truck classes could distinguish between these types of vehicles and more closely align them with their real-world use and performance.

One possible approach would be to divide light trucks into two weight or size classes, one above and one below the vehicle weight identified in NHTSA's updated size and safety study as the point where weight reductions begin to produce fleet-wide or net safety benefits. The light trucks having an attribute that is above this weight ''break point'' (or a comparable size ''break point'' derived from the weight ''break point'') would be subjected to a relatively more challenging (but still feasible and practicable) fuel economy standard than the other class of trucks. This would provide some incentive to downweight or downsize these larger vehicles to improve their fuel economy, and as a result, may improve the overall safety of the light vehicle fleet. This approach would appear to achieve some of the same objectives as the continuous function weight-based system suggested by the NAS committee.

In determining possible classes under a weight-based or a size-based system, an analysis was performed to attempt to identify analogous classes under both systems. This analysis attempted to identify a logical safety plateau for size that coincides with the weight safety plateau in a two-class system. The results show a good correlation between

size and weight. However, there are no absolute matches between vehicles in each of the size or weight classes. This is largely due to vehicles with a somewhat smaller size having the same or greater weight than larger vehicles. These vehicles are generally SUVs that are designed to be very capable in off-road situations in addition to their utility for carrying people and cargo.

Under a weight-based scenario, it appears that a logical break point would be at a vehicle curb weight of above 4,900 pounds. This is consistent with the approximate safety plateau weight (5,085 lbs.) reported in NHTSA's updated size and safety study regarding the point at which weight reduction would have safety benefits.[10] Setting the break point at this weight also enables multiple configurations of some vehicles to stay within the same weight class, providing manufacturers with flexibility in meeting the potential standard that could be established for this class. This weight is based on the composition of the MY 2002 light truck fleet and may need to be adjusted depending on the composition of the light truck fleet in future model years. The break point of 4,900 pounds was chosen because vehicles weighing in excess of that weight appear to be the ones most likely to be used for commercial and agricultural purposes. If the break point was raised to 5,085 lbs., many vehicles designed for commercial and agricultural purposes would be lumped together with vehicles generally designed for carrying passengers in a lower weight class. Including many of these vehicles weighing in excess of 4,900 lbs. in a lower weight class could remove any incentive manufacturers may have to downweight or downsize these larger vehicles to improve their fuel economy, and as a result, possibly improve the overall safety of the light vehicle fleet.

Vehicles with curb weights above 4,900 pounds include the heaviest SUVs. They also include the heavier full-size pickup trucks, such as those with a larger cab and those with long cargo beds, and long-wheelbase cargo and passenger vans. If manufacturers choose to reduce the weight of these heavier light trucks to achieve higher fuel economy, there might be an overall improvement in the safety and compatibility of the light-duty fleet.

[10] The interval estimate of the safety break point in the NHTSA study ranges from 4,224 to 6,121 pounds. The range suggests considerable uncertainty regarding the exact location of the safety break point in MY 1991–1999. Setting the upper weight class at over 4,900 pounds is well within this range.

Under a size-based scenario, the analysis looked at a measure of vehicle ''shadow'' (length multiplied by width in square inches) as the size parameter. We determined a logical safety break point to be a size of at least 16,001 square inches. As noted, this break point is derived from the weight break point. This class of vehicles would include the biggest SUVs, but not necessarily all of the vehicles in the over 4,900 lb GVWR weight class. It would also include all full-size pickup trucks and all full-size cargo and passenger vans. These vehicles appear to be the ones most likely to be used for commercial and agricultural purposes and generally have lower fuel economies than other light trucks.

Another approach to refining the light truck CAFE program would be to create multiple classes of light trucks based on vehicle weight or size. Such a system might increase fuel savings by giving regulators the ability to set different standards for vehicles with different capabilities. A multiple size class system recognizes that some vehicles must, to fulfill their functions as trucks, be large and use more fuel. Such a system would create a variety of classes, each aimed at a particular segment of the light truck fleet.

An example of a multiple class system can be found in Japan. The Japanese government has implemented fuel economy standards pursuant to the Law Concerning the Rational Use of Energy. With regard to light trucks, the Japanese have established fuel economy performance targets for eight classes of gasoline-fueled trucks. These eight classes are divided by vehicle weight and range from small cars (under 1,547 lbs) up to large trucks (above 3,342 lbs).

The lightest two classes each encompass 125 kilogram (275 lb.) intervals, while the largest 6 classes encompass 250 kilogram (551 lb.) intervals. Standards are set by identifying a ''top runner''—a vehicle with the best fuel economy performance within a particular segment—and requiring the sales weighted average of all vehicles within that segment to meet the top runner's performance at a future date. If a manufacturer exceeds the performance required in a certain segment, it earns credits that may be applied to offset a failure to meet the requirements in another segment. However, any credits used in this fashion are discounted by 50% before they are applied.

The ''top runner'' concept emphasizes the technological feasibility of achieving fuel economy within a certain class. While NHTSA must also consider other factors such as economic practicability and safety when establishing CAFE standards, the Japanese concept of creating various classes of light trucks might be employed. In determining possible classes under a weight-based or a size-based system, an analysis was performed to attempt to identify logical classes. This analysis attempted to identify a logical safety break point for both weight and size in a four- and five-class system based on available data for MY 2002 light trucks.

The agency has attempted to separate vehicles into possible classes with those having similar utility, function and capability. In arriving at the possible weight and size classes, NHTSA took into consideration all available information regarding the future light truck market and took measures to assure that new vehicles would be placed in appropriate classes. NHTSA is well aware that many of the attributes of the MY 2002 fleet may change by MY 2008, with some of these vehicles being discontinued and others being newly introduced into the market.

The agency is also considering defining either a weight-based, multi-class system or a size-based, multi-class system. Each system incorporates the safety break point discussed in the two-class system described above (4,900 lbs. or comparable size), and then creates either three or four additional classes.

Under a four-class system, the possible weight classes are (1) up to 3,400 pounds curb weight; (2) from 3,401 pounds to 4,300 pounds curb weight; (3) from 4,301 pounds curb weight to 4,900 pounds curb weight; and (4) above 4,900 pounds curb weight. In a five-class system, the second weight class could be broken out into two separate weight classes: (i) from 3,401 pounds to 3,900 pounds curb weight and (ii) from 3,901 pounds to 4,300 pounds curb weight.

The class of light trucks up to 3,400 pounds curb weight would comprise almost all car-based SUVs, many small pickup trucks powered by 4-cylinder engines with standard cabs and short beds, and some smaller SUVs with off-road capability. As a class, these vehicles had an average fuel economy of 26.6 mpg based on the MY 2002 fleet.

The 3,401 pounds to 4,300 pounds curb weight class would comprise many small- to medium-sized 2WD SUVs, most minivans, medium-sized crossover vehicles, small pickup trucks powered by 6-cylinder engines with extended cabs and long beds, some full-size pickup trucks with standard cabs and short beds, and medium-sized cargo and passenger vans. As a class, these vehicles had an average fuel economy of 22.0 mpg based on the MY 2002 fleet.

This weight range can be broken down into two additional weight classes. These separate weight classes would be from 3,401 pounds to 3,900 pounds curb weight and from 3,901 pounds to 4,300 pounds curb weight. The lighter weight class would comprise mostly smaller SUVs, medium-sized crossover vehicles and 2WD small pickup trucks. As a class, these vehicles would have an average fuel economy of 22.6 mpg based on the MY 2002 fleet.

The higher weight class would mostly comprise medium-sized 2WD SUVs, the larger minivans, 4WD small pickup trucks, some full-size pickup trucks with standard cabs and short beds, and medium-sized cargo and passenger vans. As a class, these vehicles would have an average fuel economy of 21.8 mpg based on the MY 2002 fleet.

The 4,301 pounds to 4,900 pounds curb weight class would comprise many medium-sized 4WD SUVs, some medium-sized 2WD SUVs, a few larger minivans including those with 4WD, medium-sized pickup trucks, some full-size pickup trucks with standard cabs and short beds, some with 4WD, and some short-wheelbase cargo and passenger vans. As a class, these vehicles would have an average fuel economy of 19.7 mpg based on the MY 2002 fleet.

As noted above, vehicles with curb weights above 4,900 pounds include the heaviest SUVs and the heavier full-size pickup trucks, such as those with larger than the standard cab and those with long cargo beds, and long-wheelbase cargo and passenger vans. As a class, these vehicles would have a MY 2002 average fuel economy of 17.7 mpg.

Under a size-based scenario, the analysis looked at exterior vehicle ''length times width'' (sq. in.) as the size parameter. It appears that a logical safety break point is vehicles that have a size above 16,000 sq. in. (111 sq. ft.) As a class it appears that these vehicles would have an average fuel economy of 18.3 mpg based on the MY 2002 fleet. This size delineation generally corresponds to the distinction between vehicles weighing less and more than 4900 lbs.

Under a 4-class system, the possible size classes are (1) up to 12,450 sq. in. (86.5 sq. ft.); (2) from 12,451 sq. in. to 14,500 sq. in. (86.5 sq. ft. to 100.7 sq. ft.); (3) from 14,501 sq. in. to 16,000 sq. in. (100.7 sq. ft. to 111 sq. ft.); and (4) greater than 16,000 sq. in. (112 sq. ft. or more). Under a 5-class system, the second size class could be broken out into two separate size classes (i) from 12,451 sq. in. to 13,100 sq. in. and (ii) from 13,101 sq. in. to 14,500 sq. in.

The up to 12,450 sq. in. size class would comprise almost all car-based SUVs and many smaller SUVs that have very capable off-road ability, such as Jeep Wranglers. As a class, these vehicles would have an average fuel economy of 23.8 mpg based on the MY 2002 fleet. In comparing the smallest size class to that of the lightest weight class, one may have expected the average fuel economy for each class to be much closer. The lower average fuel economy associated with the smallest size class is largely caused by the inclusion of some small, heavy SUVs in this class. Many of those same vehicles would reside within heavier weight classes under a possible weight-based system.

The 12,451 sq. in. to 14,500 sq. in. size class would comprise the vast majority of the personal use SUV and crossover market, all small and medium-sized pickup trucks (except those with ''crew cabs'') and minivans with smaller wheelbases than those in the next largest size class. As a class, these vehicles would have an average fuel economy of 20.9 mpg based on the MY 2002 fleet.

This size class can be broken down into two additional size classes. As discussed earlier, these separate size classes would be from 12,451 sq. in. to 13,100 sq. in. and from 13,101 sq. in. to 14,500 sq. in. The smaller size class would comprise mostly smaller personal use SUVs, and many of the smaller pickup trucks. As a class, these vehicles would have an average fuel economy of 22.4 mpg based on the MY 2002 fleet. The larger size class would comprise the vast majority of the medium-sized personal use SUV and crossover market, the remaining small and medium-sized pickup trucks (except those with ''crew cabs''), and minivans with smaller wheelbases. As a class, these vehicles would have an average fuel economy of 20.7 mpg based on the MY 2002 fleet.

The 14,501 sq. in. to 16,000 sq. in. size class would comprise many full-sized SUVs (*i.e.*, those without extended wheelbases), many larger minivans, some large crossover vehicles, some medium-sized pickup trucks with ''crew cabs,'' and all medium-sized cargo and passenger vans. As a class, these vehicles would have an average fuel economy of 20.8 mpg based on the MY 2002 fleet. Although it is logical to expect the 14,501 sq. in. to 16,000 sq. in. size class to have a lower CAFE than the next smallest size class, it's instructive to note that this size class is comprised of a large quantity of minivans that possess relatively high fuel economies. Because CAFE is a sales-weighted average, the MY 2002 average fuel economy for this class is not unexpected.

The 16,001 sq. in. and up size class would comprise all full-size pickups, all full-size cargo/passenger vans, and the largest of the full-size SUVs (*i.e.*, those with extended wheelbases). As a class, these vehicles would have an average fuel economy of 18.3 mpg based on the MY 2002 fleet.

Although these possible weight and size classes exhibit a fair correlation between classes, especially in regards to the overall quantity of vehicles in each relative class, there are no absolute matches between vehicles in each of the relative classes. This is largely due to vehicles with smaller sizes weighing more than other vehicles in the same size class. Specific examples include some of the larger minivans, some luxury imported SUVs, and some small off-road capable SUVs (*i.e.*, Wrangler, Rodeo Sport).

The above discussion focused on two, three and four category class systems with specific boundaries. There is no reason that systems with more categories, or different category boundaries cannot be considered. The agency invites comment on both the number of classes in a system and the delineation of categories within a classification system.

While it has advantages, a multiple class weight or size-based classification system may also present some disadvantages. Because the CAFE standard for each class would likely decrease as the weight or size of the vehicles in each class increased, the system might encourage manufacturers to increase vehicle weight or size at or near each upper boundary. This ''size or weight creep'' could result in increased overall fuel consumption. The agency notes that a size-based system might be less susceptible to that problem. Further, if manufacturers are unable to average credits between classes, a system with many classes would lack the flexibility of one with a single class or just two classes.

B. Functional Attribute-Based System

1. Weight-Based Standard

It is possible that future CAFE standards could be based on a continuous function relating one or more attributes to fuel economy. The NAS report suggested the adoption of a fuel economy standard that decreases as vehicle weight increased. One of the principal advantages of a weight-based system, according to the NAS, is that it removes the incentive to reduce vehicle

weight to improve fleet fuel economy, and thereby helps to improve safety.

A simple weight-based standard could be based on a relationship in which fuel consumption (gallons per mile) varies with respect to curb weight. Compared to a single value standard, a simple weight-based standard could discourage manufacturers from complying by reducing vehicle weight or reduce the incentive that exists under the current program. However, NHTSA's updated size and safety study suggests that fleet-wide safety is unlikely to be compromised—and may actually be enhanced—by modest reductions in the weight of vehicles of curb weight greater than approximately 5,000 pounds. Such considerations led the NAS to suggest a standard that would be weight-based below 4,000 pounds and fixed for vehicles weighing above 4,000 pounds.[11] This concept is illustrated in Figure 1.

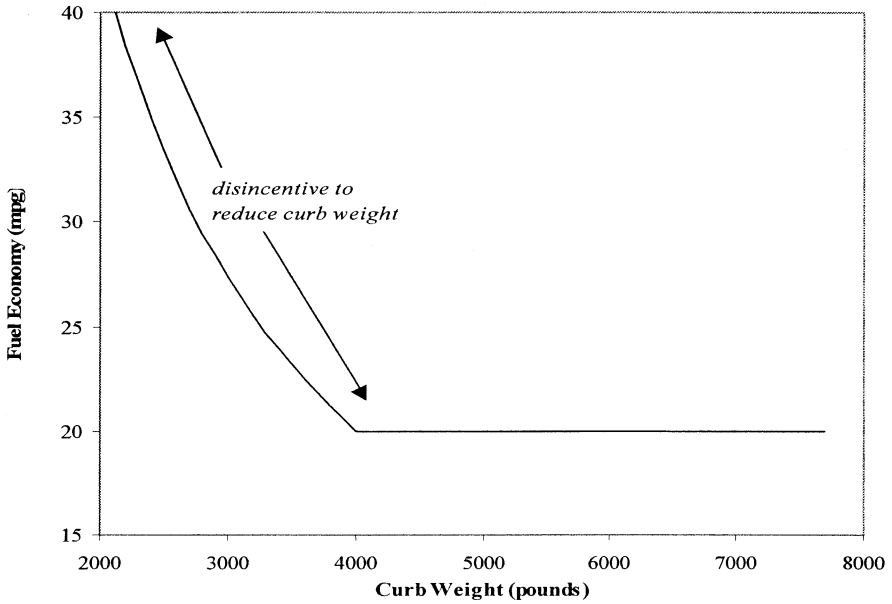

Figure 1. NAS E-CAFE Standard (mile per gallon basis)

As observed by the NAS, while limiting the incentive to reduce the weight of lighter vehicles, this approach would create ''a strong set of incentives to improve the fuel economy of the heaviest vehicles.'' (NAS, p. 108) As is true under the current fixed-value CAFE system, the E-CAFE standard would not discourage weight reduction as a compliance strategy above this 4,000-pound break point.

Using the NAS E–CAFE concept as a model, we have considered how such a weight-based standard might be applied to the light truck fleet. We considered a similarly discontinuous function with a fixed value at curb weights over 5,000 pounds. However, our analysis is focused on light trucks alone, rather than light trucks and cars together. For illustrative purposes, we used the prevailing standard for passenger cars, 27.5 mpg, as a constant at the lower end of the truck weight range. Because this function involves discontinuities near which behavior might be distorted, we also examined a continuous function (in this case, a logistic function) that approaches limits equal to the constant-value segments of the discontinuous function.

To better understand the implications of these two potential standards, we used data for the MY 2002 fleet and adjusted the constants for each function until the stringency as applied to the overall industry was equivalent to the stringency under the baseline standard (*i.e.*, a constant-value standard of 20.7 mpg). The individual data points plotted in Figure 2 show the curb weights and fuel economies of different light truck models sold in MY 2002. The dashed line shows the constant-value 20.7 mpg standard applicable in MY 2002. The two solid lines show weight-based standards that would have been equivalent in stringency (*i.e.*, that given the same mix of vehicles, would have resulted in the same net fines required) to the constant-value 20.7 mpg standard. The cross-marked solid line shows a standard modeled on the NAS E–CAFE approach and an underlying linear dependence of fuel consumption on curb weight. The unmarked solid line shows a standard that uses an underlying logistic dependence of fuel consumption on curb weight. While these examples both originated from statistical analysis of the MY 2002 data, because a CAFE standard fulfills a prescriptive rather than descriptive purpose, there is no a priori reason any attribute-based standard for a future model year would need to fit the historical data.

[11] It should be noted that the 4,000 lb. break point identified by NAS is not based on the updated NHTSA size and safety study, and that the point selected by NAS reflects a system that combines both cars and light trucks into a single category. Therefore, that break point might not be appropriate under the system considered here.

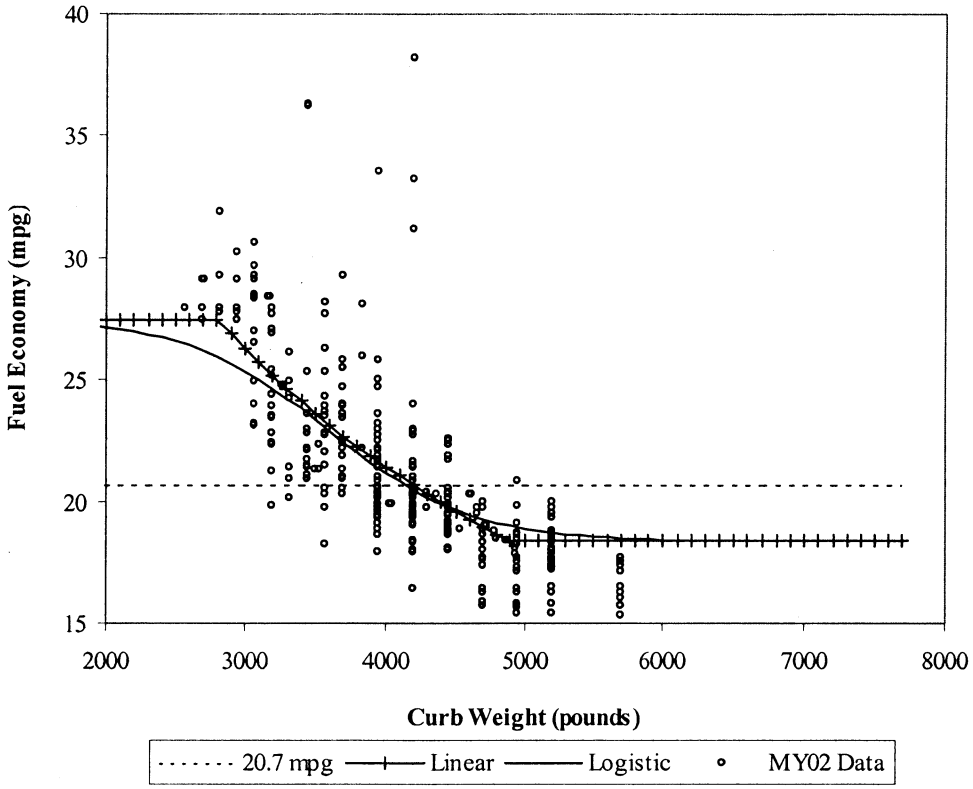

Figure 2. Weight-Based Standards

Figure 2. Weight-Based Standards

A primary concern with any attribute-based standard is the impact that such a standard could have on safety. Because fuel economy is heavily influenced by vehicle weight, the current standard for light trucks provides an incentive to reduce vehicle weight throughout the entire range of light trucks. Agency analysis indicates that safety would likely be preserved or even improved if such weight reductions were applied primarily to heavier light trucks. Therefore, the weight-based standards considered here would introduce a disincentive to reduce the weight of vehicles with curb weights below 5,000 pounds, but would also provide an incentive to reduce the weight of heavier vehicles.

A weight-based standard would have different impacts on different manufacturers based on the characteristics of their respective fleets. Depending on the uncertain economics and market implications of weight increases for vehicles below 5,000 pounds, a weight-based standard could possibly induce manufacturers to increase the weight of these vehicles and inhibit substantial increases in fuel economy. Nevertheless, the existence and extent of this effect will depend on the precise level of stringency that is established in future rulemaking, which will set the CAFE standard at the ''maximum feasible'' level subject to the existing statutory criteria.

2. Size-Based Standards

Vehicle size, expressed as ''shadow,'' may present an alternative measure for a similar system. A size-based CAFE standard would help to hold size, rather than weight, constant while improving fuel economy. While the relationship between weight and safety has been more fully reviewed (and generally focuses on the effects of vehicle incompatibility), using shadow as a measure may encourage manufacturers to build vehicles with greater rollover resistance.

In order to evaluate the possibility of using a size-based system, we performed a similar analysis to that described above for weight-based standards. Consistent with the class-based approach discussed above, we considered standards that assumed or approached a constant value for all trucks whose ''size'' or shadow was greater than 111 square feet (16,000 square inches) in order to preserve neutrality with respect to downsizing as a compliance strategy for the largest vehicles. We also limited this standard to a maximum of 27.5 mpg for the smallest vehicles. As we did for weight-based standards, the agency considered both a discontinuous (piecewise linear) standard and a continuous (logistic) standard.

After developing these formulas, we then applied them to the MY 2002 model year in a fashion similar to that shown above for the weight-based standards. Using model year 2002 data, both standards were constructed to provide industry-wide stringency equivalent to the baseline constant-value standard of 20.7 mpg. These size-based standards are shown graphically in Figure 3, where the MY 2002 CAFE standard of 20.7 mpg is represented by a dashed line.

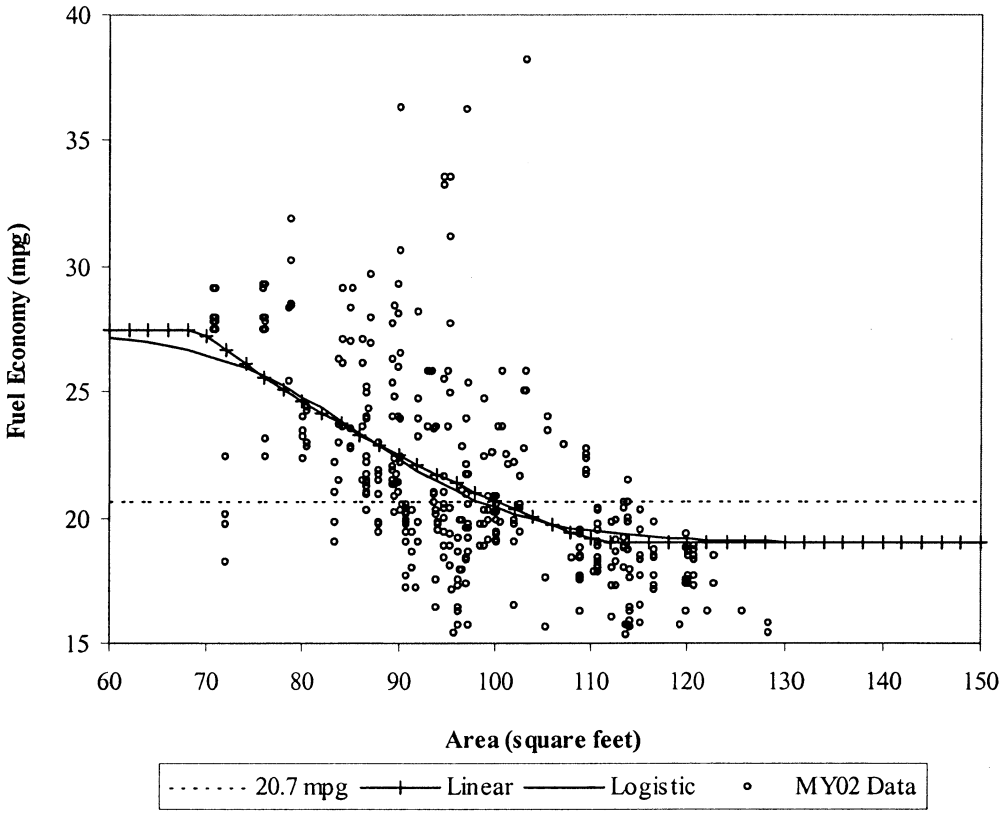

Figure 3. Size-Based Standards

Figure 3. Size-Based Standards

Analogous to the weight-based standards shown in Figure 3, the size-based standards shown in Figure 3 would introduce a disincentive to reduce the size of most vehicles of size less than approximately 110 square feet. Because of the relationships between size, weight, and fuel economy, NHTSA expects that this would provide a more positive safety incentive than a constant-value function due to the fact that, given similar height and weight, a larger vehicle usually provides greater occupant self-protection than the smaller vehicle.

A size-based standard would also entail similar concerns regarding the potential that fuel savings would be lower than expected because manufacturers would increase the size of many smaller vehicles (below 110 square feet). As under either a constant-value or weight-based standard, though, NHTSA would address this concern through the normal process of regularly updating light truck standards.

3. Mixed Attribute-Based Standards

Because weight-based and size-based standards would likely have different safety and economic implications, we also considered standards defined by functions of both weight and size. The first approach we considered was based on a functional form suggested in a recent report by Argonne National Laboratory.[12] This form begins with a linear dependence of fuel consumption (in gallons per mile, or gpm) on curb weight, but then provides ''extra credit'' for ''weight-efficient'' vehicles—that is, vehicles with curb weights that are not unusually heavy relative to their sizes. Table 3 and Figure 4 show how such a mixed standard might appear if applied to the light truck fleet at a level of overall stringency equivalent to a 20.7 mpg constant-value CAFE standard.[13]

TABLE 3.—WEIGHT-BASED STANDARD (MPG) WITH ''EXTRA CREDIT'' FOR ''WEIGHT EFFICIENCY''

Curb weight (lb)	Area (square feet)									
	60	70	80	90	100	110	120	130	140	150
2000	33.5	32.7	32.2	31.9	31.6	31.3	31.1	30.9	30.8	30.7
2500	30.3	29.5	28.9	28.4	28.1	27.8	27.6	27.4	27.2	27.1
3000	27.9	27.0	26.3	25.8	25.4	25.1	24.9	24.7	24.5	24.3
3500	26.1	25.0	24.3	23.8	23.3	23.0	22.7	22.5	22.3	22.2

[12] Argonne National Laboratory, ''Examining the Potential for voluntary Fuel Economy Standards in the United States and Canada'' Argonne, IL, October 2002.

[13] The standard shown is of the following form: gpm = a*(b*CW-c)*[d-e*CW/(f*A-g)], where CW is curb weight, A is area, and a, b, c, d, e, f, and g are constants.

TABLE 3.—WEIGHT-BASED STANDARD (MPG) WITH "EXTRA CREDIT" FOR "WEIGHT EFFICIENCY"—Continued

Curb weight (lb)	Area (square feet)									
	60	70	80	90	100	110	120	130	140	150
4000	24.7	23.5	22.7	22.1	21.7	21.3	21.0	20.8	20.6	20.4
4500	23.7	22.3	21.4	20.8	20.3	19.9	19.6	19.3	19.1	18.9
5000	22.9	21.4	20.4	19.7	19.2	18.7	18.4	18.1	17.9	17.7
5500	22.3	20.6	19.6	18.8	18.2	17.8	17.4	17.1	16.9	16.7
6000	21.9	20.1	18.9	18.0	17.4	16.9	16.6	16.3	16.0	15.8
6500	21.7	19.6	18.3	17.4	16.7	16.2	15.8	15.5	15.2	15.0
7000	21.6	19.3	17.9	16.9	16.2	15.6	15.2	14.9	14.6	14.3
7500	21.7	19.1	17.5	16.4	15.7	15.1	14.7	14.3	14.0	13.8
8000	22.0	19.0	17.2	16.1	15.3	14.7	14.2	13.8	13.5	13.2

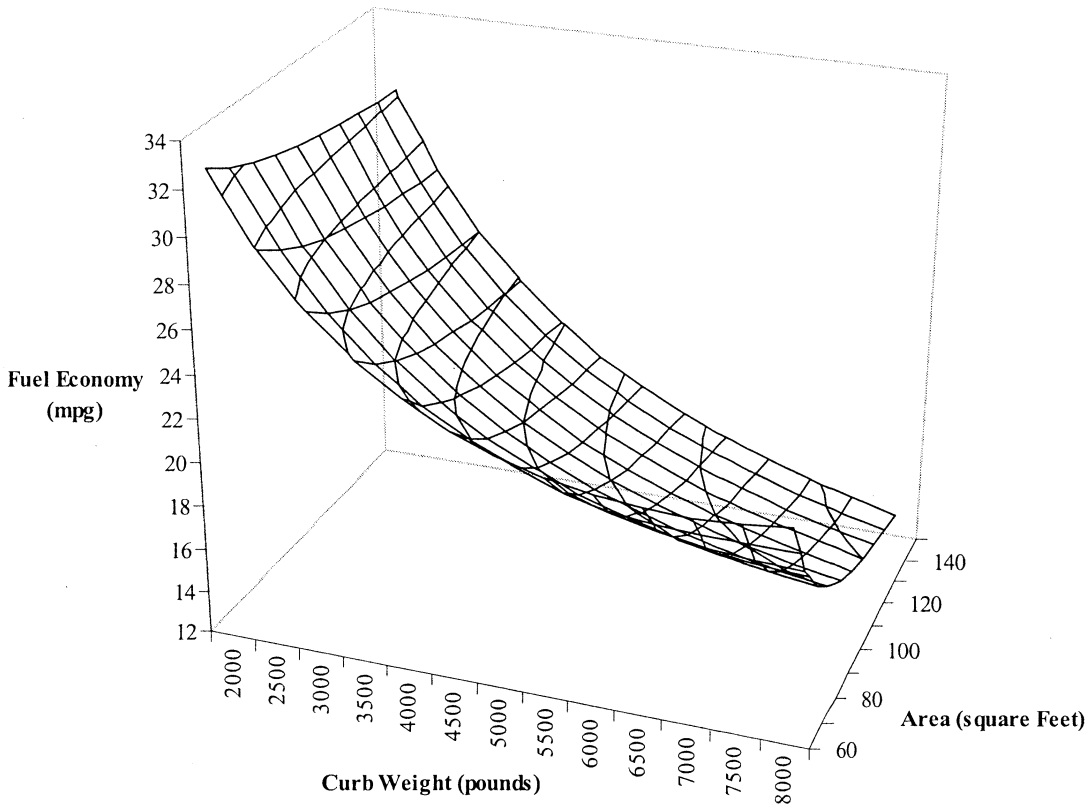

Figure 4. Weight-Based Standard with "Extra Credit" for "Weight Efficiency"

Figure 4. Weight-Based Standard with "Extra Credit" for "Weight Efficiency"

Similar to the weight-based standard shown in Figure 2, this standard would generally discourage weight reduction as a compliance strategy. This standard would also generally discourage size reduction, though not as strongly as the size-based standard shown in Figure 3.

Depending on the specific constants chosen, the standard could theoretically encourage compliance through weight reduction rather than other means (such as powertrain efficiency) for some vehicles. For the function shown in Figure 4, this would occur for vehicles that are simultaneously smaller than 70 square feet and heavier than 7000 pounds. Manufacturers may opt to reduce the weight of such vehicles in order to take advantage of a lower standard at lighter vehicle weights. However, such vehicles would be both smaller and heavier than all of the vehicles in the current U.S. fleet. Thus, further weight reduction appears to be an unlikely compliance strategy. Additionally, reducing the weight of such heavy vehicles would most likely improve highway safety.

The mixed standard would also discourage weight reduction as a compliance strategy even for vehicles with curb weights well above 5,000 pounds and, as mentioned above, would not strongly discourage size reduction. At low curb weights (less than 3,000 lbs.) and small sizes, this standard would impose class targets that exceed the existing 27.5 mpg standard for passenger cars.

We also considered a mixed standard that would combine the logistic weight- and size-based standards shown in Figure 2 and Figure 3, respectively. This approach is illustrated by the standard shown in Table 4 and Figure 5. Like the standard shown in Table 3 and Figure 4, this standard has a gradual "bowl" shape over most of the relevant region.

However, this logistic standard approaches an upper limit of 27.5 mpg limit at low curb weights and sizes as well as a lower limit at high curb weights and sizes.[14]

TABLE 4.—LOGISTIC WEIGHT- AND SIZE-BASED STANDARD (MPG) WITH "EXTRA CREDIT" FOR "WEIGHT EFFICIENCY"

Curb weight (lb)	Area (square feet)									
	60	70	80	90	100	110	120	130	140	150
2000	27.5	27.5	27.4	27.3	27.2	27.1	27.1	27.1	27.1	27.1
2500	27.5	27.4	27.2	26.9	26.6	26.5	26.4	26.4	26.4	26.4
3000	27.4	27.3	26.8	26.1	25.5	25.2	25.0	25.0	25.0	25.0
3500	27.3	27.0	26.1	24.8	23.6	23.0	22.7	22.7	22.7	22.6
4000	27.2	26.6	25.3	23.1	21.4	20.6	20.3	20.2	20.1	20.1
4500	27.1	26.3	24.5	21.9	19.8	18.9	18.5	18.4	18.4	18.4
5000	27.1	26.2	24.2	21.2	19.0	18.0	17.7	17.5	17.5	17.5
5500	27.0	26.1	24.0	21.0	18.7	17.7	17.3	17.2	17.1	17.1
6000	27.0	26.1	23.9	20.9	18.6	17.5	17.2	17.0	17.0	17.0
6500	27.0	26.1	23.9	20.8	18.5	17.5	17.1	17.0	17.0	16.9
7000	27.0	26.1	23.9	20.8	18.5	17.4	17.1	17.0	16.9	16.9
7500	27.0	26.1	23.9	20.8	18.5	17.4	17.1	17.0	16.9	16.9
8000	27.0	26.1	23.9	20.8	18.5	17.4	17.1	17.0	16.9	16.9

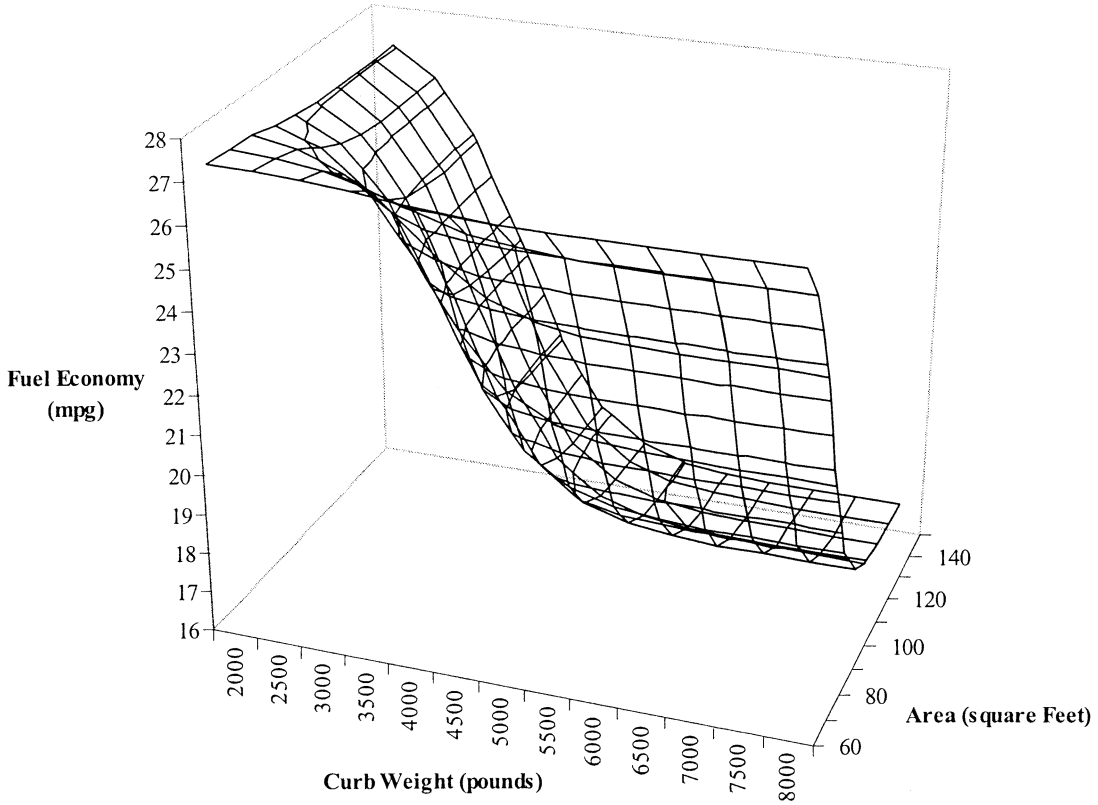

Figure 5. Logistic Weight- and Size-Based Standard

Figure 5. Logistic Weight- and Size-Based Standard

Similar to the standard shown in Figure 4, this standard would discourage both weight and size reduction. However, the logistic weight- and size-based standard shown in Figure 5 would more clearly focus this disincentive on those vehicles for which such reductions would most likely entail safety penalties. This standard would remain neutral with respect to

[14] Approximately 16.8 mpg for an overall stringency equivalent to a constant-value standard of 20.7 mpg.

size and weight reduction as a compliance strategy for the largest vehicles. For the smallest vehicles, this standard would be constrained by the constant-value standard for passenger automobiles.

C. Fixed Attribute System

A variant of the functional attribute system described above is a ''fixed'' attribute system.[15] The key difference is that, under a fixed attribute system, the relevant vehicle attribute(s) are ''fixed'' for each manufacturer at the levels reflecting that manufacturer's fleet mix in some prior (''reference'') model year. For example, each manufacturer's vehicle weight mix might be ''fixed'' for as long as the standard remains in place.[16] The manufacturer would, of course, be free to vary the attribute levels in subsequent years, but its CAFE target in any future year would continue to be based on its vehicle attribute level in the reference year. A fixed attribute system would, in essence, ''lock in'' a corporate fleet's reference-year attribute (*e.g.*, weight or size) for the purpose of regulation. This approach was devised to address the potential for upsizing/weight-creep that could occur in a functional weight-based system.

Under a fixed attribute system, each manufacturer's overall effective CAFE for any given model year is determined by the CAFE standard and the mix of vehicles it produced in some prior (''reference'') model year. For any given model year subject to a fixed-attribute standard, each manufacturer's effective CAFE target is independent of the mix of vehicles it produces. If, for example, manufacturer A produced a lighter vehicle mix than manufacturer B in the reference year, it would be subject to a more stringent effective CAFE than manufacturer B, even if manufacturer B chose a lighter vehicle mix than manufacturer A in a subsequent model year. Thus, compared to a functional attribute system, a fixed attribute system provides a somewhat different set of incentives. If, for example, weight is the relevant attribute, a fixed attribute system provides a relatively greater disincentive to increase (and relatively greater incentive to decrease) weight and than under a functional attribute system.

Given the relationship between weight and fuel economy, a fixed-attribute weight-based system such as that described above would, like the current system, provide an incentive to reduce vehicle weight throughout the range of light trucks. As discussed previously, the risk of adverse safety impacts caused by the current CAFE system could be mitigated by focusing weight reduction on some comparatively heavy vehicles, and discouraging weight reduction on some comparatively light vehicles. One possible means of focusing this incentive on the vehicle weight range in which weight reduction is the most compatible with safety considerations would be to apply a safety-based adjustment when calculating the CAFE level that would be required under a fixed-attribute system. For example, if weight reduction is expected to compromise overall safety when applied to vehicles below 5,000 pounds, but not when applied to vehicles above 5,000 pounds, the fixed-attribute CAFE level required of a given manufacturer could be adjusted using a ''safety adjustment factor'' that is based on that manufacturer's distribution of vehicle weights (*e.g.*, the fraction and average weight of that manufacturer's light trucks having curb weights above 5,000 pounds). The implications of such an adjustment would depend on each manufacturer's product mix. The Agency invites comment on how a practical fixed-attribute system should be designed and implemented, including both advantages and disadvantages.

VI. Definitional Changes to the Current Vehicle Classification System

In the EPCA, Congress created the basic distinction between passenger automobiles and non-passenger automobiles. Section 32901(16) defines a ''passenger automobile'' as an ''automobile that is manufactured primarily for transporting not more than 10 individuals, but does not include an automobile capable of off-highway operation that the Secretary decides by regulation—(A) has a significant feature (except 4 wheel drive) designed for off-highway operation; and (B) is a 4-wheel drive automobile or is rated at more than 6,000 pounds gross vehicle weight.'' This definition effectively divides the class of automobiles subject to CAFE into passenger and non-passenger automobiles (light trucks).

In December 1976, the agency promulgated a Notice of Proposed Rulemaking to further define the distinction between passenger and non-passenger automobiles for purposes of the CAFE program.[17] The agency reviewed the legislative history and concluded that Congress intended that passenger automobiles be defined as those used primarily for the transport of individuals and that all other vehicles would fall within the category of non-passenger automobiles. The agency pointed to the relevant text in the EPCA conference reports (H. Rept. 94–700):

> The passenger automobile category would exclude vehicles not manufactured primarily for transportation of individuals—such as light duty trucks, mobile homes, and multipurpose vehicles not manufactured primarily for transportation of individuals.

The agency then determined that, based on the nature of the vehicle fleet in the mid-1970s, it could best differentiate between vehicles built primarily to transport people from those built primarily for utilitarian purposes by focusing on whether the vehicle was built on a passenger car chassis versus a truck chassis. The agency also acknowledged, however, that this approach would not always achieve the distinction it was trying to create.

The agency issued regulations creating a specific classification scheme, which has served to distinguish between passenger car fleets and light truck fleets throughout the lifespan of the CAFE program. In 49 CFR 523.3, the agency defined what constitutes an ''automobile'' subject to the CAFE program. That provision includes automobiles weighing 6,000 lbs. GVWR or less and vehicles having a GVWR between 6,000–10,000 lbs. that the NHTSA Administrator has determined may feasibly be subject to the CAFE program. Feasibility is determined with regard to whether the vehicles are used substantially in the same way as other vehicles subject to the CAFE program and whether including those vehicles will result in significant energy conservation.

As part of that regulation, the NHTSA Administrator determined that vehicles satisfying the criteria for passenger automobiles set forth in 49 CFR 523.4 and certain vehicles satisfying the criteria for light trucks set forth in 49 CFR 523.5, except for their GVWR, would be considered automobiles for purposes of CAFE. The Administrator further determined that light trucks should be subject to the CAFE program if they have a basic frontal area of 45 square feet or less, have a curb weight

[15] DeCicco, John. ''Use a Vehicle-Based Approach, but Lock-In Each Company's Target.'' American Council for an Energy-Efficient Economy. 1992. This paper uses the example of a uniform percentage increase (UPI) to implement this approach. UPI is not an essential feature of this approach. NHTSA welcomes comments on alternative ways to implement this approach.

[16] The reference year could be modified periodically to reflect changing trends in the vehicle fleet.

[17] We note that the NPRM makes clear that one of the purposes of the classification scheme adopted was to encourage manufacturers to reduce the weight of their larger passenger cars. As the NAS report found, this weight reduction has had a negative impact on motor vehicle safety.

of 6,000 pounds or less and have a GVWR of 8,500 pounds or less.

In 49 CFR 523.4, the agency defined a passenger automobile as ''any automobile (other than an automobile capable of off-highway operation) manufactured primarily for use in the transportation of not more than 10 individuals.'' Under this definition, the remaining vehicles—the non-passenger or light truck category—not only includes vehicles capable of off-highway operation, but also includes other vehicles that are not manufactured primarily for transporting individuals. Therefore, a pickup truck that does not have features designed for off-highway operation is, because it is manufactured for carrying cargo, a light truck for CAFE purposes.

The agency's definition of a light truck (49 CFR 523.5) is substantially more detailed and sets up the parameters of what constitutes a vehicle capable of off-highway operation or other utilitarian uses. The regulation provides that an automobile is capable of off-highway operation if it has 4 wheel drive or if its GVWR is more than 6,000 pounds and it meets at least four out of five specified geometric measures (approach angle, break-over angle, departure angle, running clearance and front and rear axle clearance). The agency also included as light trucks vehicles designed to perform at least one of the following: (1) Transport more than 10 persons; (2) provide temporary living quarters; (3) transport property on an open bed; (4) provide greater cargo-carrying than passenger-carrying volume; or (5) permit expanded use of the automobile for cargo-carrying purposes or other non-passenger-carrying purposes through the removal of seats by means installed for that purpose by the automobile's manufacturer or with simple tools, such as screwdrivers and wrenches, so as to create a flat, floor level, surface extending from the forward most point of installation of those seats to the rear of the automobile's interior.

As discussed above, the regulatory scheme was adopted before the emergence of a more versatile vehicle fleet designed to accommodate today's consumer preferences. The regulation predated the widespread influx of minivans and SUVs. It did not anticipate the development of a market for vehicles that could easily be transformed to serve a variety of functions and which also provide basic passenger transportation needs. Nor did the regulation anticipate the emerging class of ''cross-over vehicles,'' containing aspects of both passenger and non-passenger automobiles.[18]

The application of the regulation to the current vehicle fleet (designed with the regulatory distinctions in mind) less clearly differentiates between passenger cars and light trucks than it did in the 1970s. Many vehicles produced today, while smaller than many other passenger cars, qualify as light trucks because they have been designed so that their seats can be easily removed and their cargo carrying capacity significantly enhanced.[19] Other vehicles, while appearing no different than counterpart passenger automobiles, qualify through having designs that meet four out of five geometric criteria set forth in 49 CFR 523.5. And yet other vehicles are designed in such a way that they can be easily transformed from passenger carrying motor vehicles to motor vehicles with open cargo beds without the use of substantial tools.

We recognize that any system of distinctions will drive vehicle design and result in its own set of ambiguities and ultimately may lead to unintended results as vehicle designs continue to evolve. We seek input on whether amendments to the current classification regulation can be made to better clarify the distinction between passenger automobiles and non-passenger automobiles in light of the current and emerging motor vehicle fleet.

[18] In developing the regulation, the agency struggled with defining pickup trucks constructed on passenger car frames. Pickups built on passenger car frames were to be considered light trucks, because, from a design perspective, they ''have much less passenger carrying capacity and much more property carrying capacity than the passenger cars from which they are derived.'' This passage seems to suggest that, when issuing the regulation, the agency intended that a vehicle should be considered a non-passenger automobile unless it clearly was designed primarily for the transportation of people rather than cargo (42 FR 38362, 38367).

[19] In a letter dated March 21, 2000 to Gerald Plante (and published on the agency's Web site), the agency considered whether the flat floor provision was intended to permit vehicles to be classified as light trucks if their seats are folded into a flat floor, rather than removed to create a flat floor. The agency considered the vehicles under consideration when the regulatory provision was first issued and determined that the regulation did not anticipate that vehicles would be classified as light trucks by virtue of folding seats. This was based, in part, on the fact that seats that folded into a vehicle floor were found only in station wagons using a car chassis. Contemporary minivans are built on their own chassis and are not derived from either a car or a truck. If the resulting cargo area is indicative of a dual use beyond simply carrying passengers, it may not matter if the seats fold or are removable. Were we in the future to permit the folding of seats to create a flat floor to serve as the basis for classifying vehicles as light trucks, the enhancement of the cargo carrying capabilities of the vehicle must be significant, just as it would were the seats removed.

Possible approaches to updating the classification rules are set forth below. In seeking comments on these alternatives, the agency recognizes that any successful classification scheme must adequately account for the tremendous variety of needs that are served by light vehicles. Some need only carry one or two persons to work, while others must be able to carry large, relatively heavy loads. While some light trucks may be used primarily to transport passengers, their ''peak use'' or ''peak value'' (*e.g.*, towing boats, hauling heavy loads) may require substantial performance capabilities. In considering potential changes to the classification definitions, we intend to preserve the ability of consumers to obtain vehicles that meet their needs, while providing competitive equity among vehicle manufacturers, improving vehicle safety, and enhancing fuel economy.

We expect to receive comments both with regard to the concepts set forth below and with regard to some of the practical necessities that might accompany any amendments to the classification regulations. These would include any necessary lead-time, possible approaches to phasing-in new definitions and the treatment of credits and penalties during the transition period.

A. Vehicle Classification Using a Single Attribute

The definitions contained in 49 CFR 523.5 provide multiple methods of classifying a vehicle as a light truck. Alternatively, the agency could define a particular vehicle attribute as that most appropriate to distinguish between light trucks and passenger cars. Such a system has the advantage of being simple to apply and could help to avoid criticism that manufacturers can ''game'' the classification system by taking advantage of certain features, such as the flat floor provision, to include vehicles in their light truck fleet that are otherwise classified as passenger cars. In considering attributes that may be used, we must be cognizant of the need to choose distinctions that would continue to serve consumer choices, and thus would discourage any incentive to design vehicles just beyond the minimum necessary to be classified as a light truck.

We have considered two attributes, which could be used to distinguish between the light truck and passenger car fleets: vehicle curb weight and interior volume. To employ this type of classification system, the agency would need first to determine that a vehicle with either curb weight or interior

volume above a specified minimum is not one manufactured primarily for transporting not more than ten individuals.[20] If curb weight were used as the determining factor in deciding whether to classify a vehicle as a passenger car or light truck, based on MY 2002 fleet and available information on MY 2003–2004 vehicles, the agency believes that a curb weight of approximately 3,700 pounds could serve as a possible minimum curb weight to classify vehicles as light trucks. MY 2002 data shows that all minivans and mid-size SUVs have curb weights of at least 3,700 pounds.

In examining the MY 2002 CAFE data, the agency found that there are two main types of passenger cars that might be classified as light trucks if the minimum curb weight was established at 3,700 pounds: large sedans and ''exotic'' sport cars. There are also several types of light trucks that might be classified as passenger cars if the minimum curb weight was established at 3,700 pounds: small unibody SUVs, small ladder-on-frame SUVs, and some small pickups.

Interior volume presents another possible approach to using a single attribute to distinguish between passenger cars and light trucks. The agency used three methods for determining an interior volume measurement: (1) For cars with trunks, interior volume may be defined as the passenger compartment volume plus trunk volume; (2) for station wagons, SUVs, and crossover vehicles, interior volume may be defined as the volume enclosed within the combined passenger and cargo area; (3) for pickup trucks, interior volume may be defined as the interior volume of the cab plus twice the cargo bed volume.

In examining the MY 2002 fleet and available information on MY 2003–2004 vehicles, we believe that an interior volume measure in the range of 130–135 cubic feet could serve as a possible minimum interior volume to classify vehicles as light trucks. In examining the MY 2002 CAFE data, the agency found that there are two main types of passenger cars that might be classified as light trucks under such a system: large sedans and large station wagons. The agency also found that there are two main types of light trucks that might be classified as passenger cars: small two-wheel drive unibody SUVs and small two-wheel drive ladder-on-frame SUVs.[21]

B. The Flat Floor Provision

The current regulation classifies as a light truck any vehicle with readily removable seats that, once removed, leave a flat floor level surface extending from the forward most removable seat mount to the rear of the vehicle. The flat floor provision originally was based on the agency's determination that passenger vans with removable seats and a flat load floor were derived from cargo vans (42 FR 38367; July 28, 1977) and should be classified as trucks. Because these passenger vans were derived from cargo vans, the agency distinguished them from station wagons—which also had large flat areas with their seats folded—and were based on a car chassis.

In the preamble to the final rule establishing the 1983–1985 fuel economy standards, NHTSA responded to a request from Chrysler to revise the definition of light truck to assure that future compact passenger vans would be classified as light trucks. At that time, we indicated that the regulations classify large passenger vans as light trucks based on the ability of passenger van users to readily remove the rear seats to produce a flat, floor level cargo-carrying space (45 FR 81593; Dec., 11 1980). It is believed that this decision contributed to the development of the minivan market.

Many contemporary minivans are built on their own individual chassis or platform. Most of these vehicles are available only as passenger vans without any cargo variant. While they may be trucks in their own right, they do not necessarily share a common chassis or platform with cargo trucks. However, because minivans have removable seats and a flat floor, they have traditionally been classified as trucks for fuel economy purposes.[22] As the agency's recently updated size and safety study shows, minivans are among the safest vehicles on the road. In fact, the study found that large 4-door cars and minivans had the lowest overall fatal crash involvement rates per billion vehicle miles during the years studied (1991–1999).

We recognize that the flat floor provision may be essential to the minivan market and that many cross-over vehicles, which carry significant numbers of passengers while sporting a lower center of gravity than more traditional SUVs, are classified as light trucks as a result of the flat floor provision. We are concerned that the elimination of the flat floor provision may deter the emerging fleet of crossover vehicles and significantly impair the minivan market.

However, we also believe the program would benefit if the flat floor definition reflected more accurately those vehicles serving significant cargo carrying, recreational or utilitarian use, as opposed to those more generally classified as passenger cars. We have accordingly considered potential approaches to modifying the flat floor provision.

One such approach might be to establish a minimum flat floor length that vehicles must meet to be classified a light truck. A possible minimum length is 60 inches. Other potential approaches might include: (1) restricting the class of light trucks relying on the flat floor provision to those of a certain minimum level of interior volume, (such as 75 to 80 cubic feet) and (2) premising the flat floor provision on having a certain ratio of cargo space to passenger carrying space. The minimum flat floor length and the range for the minimum level of interior volume are offered as possible values because currently designed light trucks that have flat floor lengths and interior volumes above those values have ladder-on-frame designs, which are more closely associated with traditional light truck design and are generally designed for off-road use. Light trucks with flat floor lengths and interior volumes below these possible minimum values are generally those with unibody designs, which resemble passenger cars in size and shape and possess very limited off-road capability. A range for the possible minimum level of interior volume, rather than an absolute value, is provided due to the current mixture of unibody and ladder-on-frame designed light trucks within this range. These possible minimum values will be reassessed in light of the comments received from manufacturers and others.

We encourage specific comments on the possible revisions set forth above, and any other comments that would assist NHTSA in refining this part of the light truck regulatory definition.

[20] The application of this concept might result in the substitution of a minimum curb weight or interior volume for the various definitions contained within 49 CFR 523.5(a). Of course, a vehicle meeting the other statutory criteria addressing vehicles capable of off-highway operation, as defined in 49 CFR 523.3(b), might continue to qualify as a light truck.

[21] Vehicles that are either four-wheel drive or have a gross vehicle weight above 6000 pounds are light trucks if they also have a significant feature (as defined by agency regulations) designed for off-highway operation (§ 32901(a)(16)). Four-wheel drive SUVs, regardless of their weight, would be classified as light trucks if they had features which NHTSA deemed to be indicative of design for off-road use.

[22] EPA also classifies minivans as light duty trucks for emissions purposes as derivatives of trucks.

C. Open Cargo Bed

49 CFR 523.5(a)(3) provides that a vehicle that transports property on an open bed is a light truck. However, this section contains no minimum dimension for how small an open bed may be before a vehicle can no longer be classified as a truck on that basis. Some new vehicle designs include relatively small open cargo beds or cargo beds that transform easily into passenger carrying compartments.[23] While these vehicles are designed for transporting cargo as well as people, it may be possible to differentiate between those more likely to be used in utilitarian fashion by specifying a minimum dimensional requirement for the cargo bed.

The Society of Automotive Engineers (SAE) Recommended Practice J1100, for example, provides a means for calculating the cargo volume of open bed trucks. The SAE formula (V5) uses a standard measure of the interior length of the bed, the interior width of the bed (width at floor plus width at wheelhouse divided by two), and the height of the cargo area (from the cargo floor to the uppermost point on the side of the bed). Measured in this fashion, most small ½ ton pickup trucks in today's market have a cargo volume of approximately 40 cubic feet. A number of truck configurations, particularly those with ''crew cabs,'' have smaller beds whose cargo volumes are approximately 30 cubic feet.

Using SAE Recommended Practice J1100 it is also possible to calculate the cargo area of open bed trucks. According to the cargo volume calculation specified in J1100, the area of an open cargo bed can be obtained by multiplying the interior length of the bed by the interior width of the bed. Measured in this fashion, most small ½ ton pickup trucks in today's market have a cargo area of approximately 3,500 square inches. A number of truck configurations, particularly those with ''crew cabs,'' have smaller beds whose cargo areas can be as small as 3,100 square inches.

The agency seeks comment on whether cargo volume, cargo area, or some other measure, might be an appropriate means for determining when an open bed vehicle should be classified as a car or a truck and what minimum dimensions should be used to differentiate between passenger cars and light trucks. We also invite comment on what cubic foot or square inch minimum could be specified for cargo carrying capability that would still provide manufacturers with sufficient design flexibility to build open bed vehicles that meet certain market needs, including vehicles with ''crew cabs'' or other extended cabs, necessary to provide both passenger carrying and cargo carrying capability. We are also interested in comments addressing other measurement criteria that would enable vehicles with ''crew cabs'' and extended cabs to be classified as light trucks.

D. Off-Highway Operation

Congress directed that the characteristics of vehicles capable of off-highway operation be established through regulations promulgated by NHTSA. 49 CFR 523.5(b) sets out the definition of an automobile capable of off-highway operation. Following the definition contained in § 32901 of Chapter 329, the regulation considers an automobile as being capable of off-highway operation if it has either 4-wheel drive or a GVWR above 6,000 pounds and meets four out of five characteristics.

The characteristics are: (A) an approach angle of not less than 28 degrees; (B) a break-over angle of not less than 14 degrees; (C) a departure angle of not less than 20 degrees; (D) a running clearance of not less than 20 centimeters; and (E) front and rear axle clearances of not less than 18 centimeters each. As NHTSA observed in the Notice of Proposed Rulemaking introducing these criteria, the dimensions were derived from examining the characteristics of off-road vehicles manufactured in the mid-1970's (41 FR 55368, 55371; December 20, 1976).

Four-wheel drive, found almost exclusively on larger trucks when the CAFE program was established, is now found on vehicles of all shapes and sizes. As technological advances have made four-wheel drive more suitable for use on smaller vehicles and easier for drivers to use, it is now appearing more frequently on sedans and station wagons as well as light trucks.[24] Some of these vehicles are classified as passenger cars for CAFE purposes while others have been classified as light trucks. As applied to passenger cars, four-wheel drive is intended to improve on-road performance in adverse weather and these vehicles do not have sufficient ground clearances for off-highway use. By itself, four-wheel drive is now far less indicative of whether a vehicle is likely to be used off-highway than it was when EPCA was enacted.

In the current fleet of utility vehicles that are classified as trucks for CAFE purposes because of their off-road attributes, the physical characteristics of the vehicles vary significantly. Approach angles, for example, vary from approximately 26 to 72 degrees. Departure angles range from approximately 14 to 42 degrees, while break-over angles range from 14 to 27.5 degrees. Axle clearances, for both axles and running clearance, also vary substantially.[25] Changing the definitions of the angles might serve to distinguish better the characteristics of vehicles currently used off-road from those currently used primarily on the public roads. Doing so, however, might also create the incentive to build vehicles meeting the new dimensions. Because amended dimensions are likely to lead to vehicles with higher centers of gravity, altering them might generally increase rollover risks and additional harm due to rollover crashes.

A different approach might be to modify 49 CFR 523.5(b) to provide that vehicles meeting certain individual qualifying criteria, or certain combinations of them, be classified as a light truck. For example, a vehicle that meets both the approach and departure angle criteria and any two out of the remaining three criteria (break-over angle, axle clearance or running clearance) might be less likely to be derived from a car. Having sufficiently large approach and departure angles are important for off-road vehicles when navigating steep and uneven terrain. Four-wheel drive vehicles derived from passenger cars are more likely to meet either the approach angle or departure angle criteria, but less likely to meet both.

VII. Expanding the Application of the CAFE Program

As noted above, beginning with MY 1980, the NHTSA Administrator determined that the CAFE program should include vehicles with a GVWR of up to 8,500 pounds. Some groups have espoused increasing the application of the CAFE program to the statutory limit of 10,000 lbs. GVWR to

[23] For example, the Subaru Baja is an open bed vehicle that is built on the same platform as the Subaru Outback wagon. Although the Baja has all-wheel drive, it does not meet the criterion for classification as an off-road vehicle. It is classified as a truck on the basis of having an open bed slightly less than three and one-half feet long.

[24] A number of manufacturers, including Audi and others, produce four-wheel drive performance cars. At least one manufacturer, Subaru, exclusively produces four-wheel drive passenger cars. In recent years, Volvo produced a two-wheel and four-wheel drive station wagon where the two-wheel drive version was classified as a car and the four-wheel drive model was classified as a truck.

[25] Not surprisingly, vehicles with extreme off-road capability—such as the Hummer H1—are at the upper range of these dimensions, while utility vehicles aimed more for on-road use are at the lower end of the range of these dimensions.

include some of the larger SUVs that have entered the market in recent years. During this time, a small number of vehicles classified as SUVs have been of sufficient GVWR to be beyond the reach of the CAFE program. These very large SUVs account for approximately 10% of the total number (approximately 500,000) of vehicles with a GVWR between 8,500 and 10,000 pounds, and less than 1% of all SUVs. Sales of these very large SUVs have remained stable over the last several years. Including additional vehicles within the CAFE program requires a finding that doing so is feasible and that it would significantly enhance energy conservation.

This document presents two potential options under which vehicles with a GVWR of up to 10,000 lbs. could be included under the CAFE program. One option would be adopting the definition established by EPA for medium duty passenger vehicles (65 FR 6698, 6749–50, 6851–6852) for use in the CAFE program. The definition applies to a heavy-duty vehicle with a gross vehicle weight rating of 8,501 to 10,000 pounds that is designed primarily for the transportation of persons. However, medium duty passenger vehicles (MDPV's) do not include vehicles that:

1. Are ''incomplete trucks''; or
2. Have a seating capacity of more than 12 persons; or
3. Are designed for more than 9 persons seated rearward of the driver's seat; or
4. Are equipped with an open cargo area of 72 inches in interior length or more, or a covered box not readily accessible from the passenger compartment that is 72 inches or more in interior length.

This definition would essentially make SUVs between 8,500 and 10,000 lbs. GVWR subject to CAFE, while continuing to exclude most medium- and heavy-duty pickups and most medium- and heavy-duty cargo vans that are primarily used for agricultural and commercial purposes. The inclusion of these larger SUVs in CAFE could help reduce petroleum consumption. In addition, public policy directed towards reducing the weight of these vehicles may help address vehicle incompatibility and thus improve safety.

A second option would be to make all vehicles between 8,500 and 10,000 lbs GVWR subject to CAFE standards. Since the majority of trucks in this weight class are pickup trucks, the agency is concerned about the impacts this might have on farmers and small businesses, and in particular, the potential adverse impacts on the cost and utility of these vehicles. The agency nonetheless invites comments on this reform alternative, as well as the option to cover a more limited set of vehicles with a GVWR between 8,500 and 10,000 lbs.

VIII. Conclusion

The current structure of the CAFE program was created in the 1970s. It reflects efforts made to distinguish between vehicles prevalent at the time and bearing little resemblance to today's motor vehicle market or the current and emerging vehicle fleet. The Congressional ''freeze'' imposed during much of the 1990s prohibited the agency from reviewing the efficacy of the regulations defining passenger cars and light trucks, or the manner in which the CAFE program is structured. The current structure of the CAFE program encourages the development of vehicles that are larger and heavier, and which may have higher centers of gravity. Thus, the CAFE program may contribute to the two principal vehicle safety problems on the road today: vehicle compatibility and rollover.

Through this document, the agency intends to begin a public discussion on potential ways, within current statutory authority, to modernize the CAFE program and to make it more consistent with our public policy objectives. The agency has set forth a number of possible concepts and measures, and invites the public to present additional concepts not presented here. This discussion is not intended to address the stringency of proposed CAFE standards in the future, but rather the basic structure of the CAFE program. The agency is interested in any suggestions towards revamping the CAFE program in such a way as to enhance overall fuel economy while protecting occupant safety and the economic vitality of the auto market.

IX. Public Participation

Interested persons are invited to comment on this advance notice of proposed rulemaking. It is requested, but not required, that two copies be submitted to the Office of Docket Management, Room PL–401, Nassif Building, 400 Seventh Street, SW., Washington, DC 20590.

All comments must be limited to 15 pages in length. Necessary attachments may be appended to those submissions without regard to the 15-page limit (49 CFR 553.21). This limitation is intended to encourage commenters to detail their primary arguments in a concise fashion.

Written comments to the public docket must be received by April 27, 2004.

All comments received before the close of business on the comment closing date will be considered and will be available for examination in the docket at the above address before and after that date. To the extent possible, comments filed after the closing date will also be considered. However, the rulemaking action may proceed at any time after that date.

NHTSA will continue to file relevant material in the docket as it becomes available after the closing date, and it is recommended that interested persons continue to examine the docket for new material.

Those persons who wish to be notified upon receipt of their comments in the docket should enclose, in the envelope with their comments, a self-addressed stamped postcard. Upon receiving the comments, the docket supervisor will return the postcard by mail.

Copies of all comments will be placed in the Docket for this advance notice of proposed rulemaking in the Office of Docket Management, Room PL–401, Nassif Building, 400 Seventh Street, SW., Washington, DC 20590.

X. Regulatory Analyses and Notices

Executive Order 12866 and DOT Regulatory Policies and Procedures

NHTSA has considered the potential impacts of this advance notice of proposed rulemaking under Executive Order 12866 and the Department of Transportation's regulatory policies and procedures. The Office of Management and Budget reviewed this document under E.O. 12866, ''Regulatory Planning and Review.'' This document has been determined to be significant under the Department's regulatory policies and procedures.

This document seeks comment on potential changes to the agency's regulations relating to Corporate Average Fuel Economy, including potential changes to vehicle classification and to the fuel economy standards applicable to those vehicles. The agency could take a variety of regulatory actions regarding these issues. Further, this agency has not identified any regulatory actions sufficiently likely to warrant calculation of possible benefits and costs. If NHTSA were to initiate rulemaking and develop a rulemaking proposal, the agency would calculate the costs and benefits associated with the specific proposal and place its analysis in the docket for that proposal. The agency would also conduct the various other rulemaking analyses required by applicable statutes and Executive Orders.

NHTSA will reassess this rulemaking in relation to the Executive Order, the DOT Regulatory Policies and Procedures, the Regulatory Flexibility Act, the Unfunded Mandates Reform Act of 1995 and other requirements for analyzing rulemaking impacts if, after using the information received in response to this advanced notice, the agency decides to issue a proposal to amend its current regulations. To that end, the agency solicits comments, information, and data useful in assessing the impacts of making the potential changes discussed in this document.

Privacy Act

Anyone is able to search the electronic form of all submissions received into any of our dockets by the name of the individual submitting the comment (or signing the comment, if submitted on behalf of an association, business, labor union, etc.). You may review DOT's complete Privacy Act Statement in the **Federal Register** published on April 11, 2000 (Volume 65, Number 70; Pages 19477–78) or you may visit *http://dms.dot.gov.*

Issued: December 22, 2003.

Stephen R. Kratzke,

Associate Administrator for Rulemaking.

[FR Doc. 03–31890 Filed 12–22–03; 3:44 pm]

BILLING CODE 4910–59–P

DEPARTMENT OF TRANSPORTATION

National Highway Traffic Safety Administration

49 CFR Part 533

[Docket No. 2003–16709]

RIN 2127–AJ26

Reforming the Automobile Fuel Economy Standards Program; Request for Product Plan Information

AGENCY: National Highway Traffic Safety Administration (NHTSA), Department of Transportation (DOT).

ACTION: Request for comments.

SUMMARY: The purpose of this request for comments is to acquire information regarding vehicle manufacturers' future product plans to assist the agency in analyzing possible reforms to the corporate average fuel economy (CAFE) program which are discussed in a companion notice published today. The agency is seeking information that will help it assess the effect of these possible reforms on fuel economy, manufacturers, consumers, the economy, motor vehicle safety and American jobs.

DATES: Comments must be received on or before April 27, 2004.

ADDRESSES: You may submit comments [identified by DOT DMS Docket Number 2003–16709] by any of the following methods:

- Web Site: *http://dms.dot.gov*. Follow the instructions for submitting comments on the DOT electronic docket site.
- Fax: 1–202–493–2251.
- Mail: Docket Management Facility; U.S. Department of Transportation, 400 Seventh Street, SW., Nassif Building, Room PL–401, Washington, DC 20590–001.
- Hand Delivery: Room PL–401 on the plaza level of the Nassif Building, 400 Seventh Street, SW., Washington, DC, between 9 a.m. and 5 p.m., Monday through Friday, except Federal Holidays.
- Federal eRulemaking Portal: Go to *http://www.regulations.gov*. Follow the online instructions for submitting comments.

FOR FURTHER INFORMATION CONTACT: For non-legal issues, call Ken Katz, Lead Engineer, Fuel Economy Division, Office of Planning and Consumer Standards, at (202) 366–0846, facsimile (202) 493–2290, electronic mail *kkatz@nhtsa.dot.gov*. For legal issues, call Otto Matheke, Office of the Chief Counsel, at (202) 366–5263, electronic mail *omatheke@nhtsa.dot.gov*.

SUPPLEMENTARY INFORMATION:

I. Introduction

In a companion document, an advanced notice of proposed rulemaking, published today in the **Federal Register**, NHTSA is seeking comments relating to possible enhancements and reforms to the CAFE program that will assist in furthering fuel conservation, while protecting motor vehicle safety and American jobs. To assist the agency in analyzing possible reforms to the CAFE program, in addition to the questions found in the body of the advanced notice of proposed rulemaking, NHTSA has included a number of additional questions, found in an appendix to this notice, directed primarily toward vehicle manufacturers.

The appendix requests information from manufacturers regarding their product plans from MY 2003 through MY 2012, and the assumptions underlying those plans. The agency would appreciate answers that are as responsive as possible so that the agency can analyze the impact of the reforms on the entire industry. Because some of the possible reforms may change the distinction between passenger cars and light trucks, the agency is requesting data from manufacturers for both their passenger car plans AND their light truck plans.

In an attempt to assure conformity in data submittal and to assist manufacturers with supplying information to the agency regarding their product plans from MY 2003 through MY 2012, NHTSA has developed spreadsheet templates for manufacturers' use. These templates are the preferred format for data submittal, and can be found on the agency's CAFE website at: *http://www.nhtsa.dot.gov/cars/rules/CAFE/rulemaking.htm*. The Appendix also includes sample tables that manufacturers should refer to when submitting their data to the Agency.

II. Public Participation

Interested persons are invited to comment in response to this request for comments. It is requested, but not required, that two copies be submitted to the Office of Docket Management, Room PL–401, Nassif Building, 400 Seventh Street, SW., Washington, DC 20590.

Your comments must be written and in English. To ensure that your comments are correctly filed in the Docket, please include the docket number of this document in your comments. All comments must be limited to 15 pages in length. Necessary attachments may be appended to those submissions without regard to the 15-page limit (49 CFR 553.21). This limitation is intended to encourage commenters to detail their primary arguments in a concise fashion.

Written comments to the public docket must be received by April 27, 2004.

All comments received before the close of business on the comment closing date will be considered and will be available for examination in the docket at the above address before and after that date. To the extent possible, comments filed after the closing date will also be considered. However, the rulemaking action may proceed at any time after that date. NHTSA will continue to file relevant material in the docket as it becomes available after the closing date, and it is recommended that interested persons continue to examine the docket for new material.

Please submit two copies of your comments, including the attachments, to Docket Management at the address given above under **ADDRESSES**.

Comments may also be submitted to the docket electronically by logging onto the Dockets Management System website at *http://dms.dot.gov*. Click on

''Help & Information'' or ''Help/Info'' to obtain instructions for filing the document electronically.

If you wish Docket Management to notify you upon its receipt of your comments, enclose a self-addressed, stamped postcard in the envelope containing your comments. Upon receiving your comments, Docket Management will return the postcard by mail.

If you wish to submit any information under a claim of confidentiality, you should submit three copies of your complete submission, including the information you claim to be confidential business information, to the Chief Counsel, NHTSA, at the address given above under **FOR FURTHER INFORMATION CONTACT**. In addition, you should submit two copies, from which you have deleted the claimed confidential business information, to Docket Management at the address given above under **ADDRESSES**. If you submit a computer disk containing your confidential plans, please submit only one copy. When you send a comment containing information claimed to be confidential business information, you should include a cover letter setting forth the information specified in our confidential business information regulation (49 CFR part 512). If you submit both a hard copy and a computer disk containing confidential business information, please include a separate cover letter for each submission.

III. Regulatory Analyses and Notices

Executive Order 12866 and DOT Regulatory Policies and Procedures

NHTSA has considered the potential impacts of this request for comments under Executive Order 12866 and the Department of Transportation's regulatory policies and procedures. This document has been determined to be nonsignificant under the Department's regulatory policies and procedures.

This document seeks information regarding future manufacturer product plans, capabilities and costs in order to assess potential changes to the agency's regulations relating to Corporate Average Fuel Economy, including potential changes to vehicle classification and to the fuel economy standards applicable to those vehicles. The agency could take a variety of regulatory actions regarding these issues. Further, this agency has not identified any regulatory actions sufficiently likely to warrant calculation of possible benefits and costs. If NHTSA were to initiate rulemaking and develop a rulemaking proposal, the agency would calculate the costs and benefits associated with the specific proposal and place its analysis in the docket for that proposal. The agency would also conduct the various other rulemaking analyses required by applicable statutes and Executive Orders.

NHTSA will reassess this rulemaking in relation to the Executive Order, the DOT Regulatory Policies and Procedures, the Unfunded Mandates Reform Act of 1995 and other requirements for analyzing rulemaking impacts if, after using the information received in response to this request for comments, the agency decides to issue a proposal to amend its current regulations.

Authority: 15 U.S.C. 2002; delegation of authority at 49 CFR 1.50.

Issued on: December 22, 2003.

Stephen R. Kratzke,

Associate Administrator For Rulemaking.

Appendix

I. Definitions

As used in this appendix—

1. ''Automobile,'' ''fuel economy,'' ''manufacturer,'' and ''model year,'' have the meaning given them in Section 32901 of Chapter 329 of Title 49 of the United States Code, 49 U.S.C. 32901.

2. ''Cargo-carrying volume,'' ''gross vehicle weight rating'' (GVWR), and ''passenger-carrying volume'' are used as defined in 49 CFR 523.2.

3. ''Basic engine'' has the meaning given in 40 CFR 600.002–85(a)(21). When identifying a basic engine, respondent should provide the following information:

(i) Engine displacement (in liters). If the engine has variable displacement (*i.e.*, cylinder deactivation) the respondent should provide both the minimum and maximum engine displacement.

(ii) Number of cylinders or rotors.

(iii) Number of valves per cylinder.

(iv) Cylinder configuration (V, in-line, etc.).

(v) Other engine characteristics, abbreviated as follows:

DI—Direct Injection
ID—Indirect Injection
MPFI—Multipoint Fuel Injection S.I.
PFI—Port Fuel Injection
SEFI—Sequential Electronic Fuel Injection
TBI—Throttle Body Fuel Injection
T—Turbocharged
S—Supercharged
FFS—Feedback Fuel System
2C—Two-stroke engines
OHV—Overhead valve
SOHC—Single overhead camshaft
DOHC—Dual overhead camshaft
VVT—Variable valve timing
VVLT—Variable valve lift and timing
CYDA—Cylinder deactivation
IVT—Intake valve throttling
CVA—Camless valve actuation
VCR—Variable compression ratio
LBFB—lean burn-fast burn combustion

4. ''Domestically manufactured'' is used as defined in Section 32904(b)(2) of Chapter 329, 49 U.S.C. 32904(b)(2).

5. ''Passenger car'' means an automobile of the type described in 49 CFR Part 523.3 and 523.4.

6. A ''model'' of passenger car is a line, such as the Chevrolet Impala, Ford Taurus, Honda Accord, etc., which exists within a manufacturer's fleet.

7. ''Model Type'' is used as defined in 40 CFR 600.002–85(a)(19).

8. ''Percent fuel economy improvements'' means that percentage which corresponds to the amount by which respondent could improve the fuel economy of vehicles in a given model or class through the application of a specified technology, averaged over all vehicles of that model or in that class which feasibly could use the technology. Projections of percent fuel economy improvement should be based on the assumption of maximum efforts by respondent to achieve the highest possible fuel economy increase through the application of the technology. The baseline for determination of percent fuel economy improvement is the level of technology and vehicle performance with respect to acceleration and gradeability for respondent's 2003 model year passenger cars in the equivalent class.

9. ''Percent production implementation rate'' means that percentage which corresponds to the maximum number of passenger cars of a specified class, which could feasibly employ a given type of technology if respondent made maximum efforts to apply the technology by a specified model year.

10. ''Production percentage'' means the percent of respondent's passenger cars of a specified model projected to be manufactured in a specified model year.

11. ''Project'' or ''projection'' refers to the best estimates made by respondent, whether or not based on less than certain information.

12. ''Redesign'' means any change, or combination of changes, to a vehicle that would change its weight by 50 pounds or more or change its frontal area or aerodynamic drag coefficient by 2 percent or more.

13. ''Relating to'' means constituting, defining, containing, explaining, embodying, reflecting, identifying, stating, referring to, dealing with, or in any way pertaining to.

14. ''Respondent'' means each manufacturer (including all its divisions) providing answers to the questions set forth in this appendix, and its officers, employees, agents or servants.

15. ''Test Weight'' is used as defined in 40 CFR 86.082–2.

16. ''Transmission class'' is used as defined in 40 CFR 600.002–85(a)(22). When identifying a transmission class, respondent also must indicate whether the type of transmission, and whether it is equipped with a lockup torque converter (LUTC), a split torque converter (STC), and/or a wide gear ratio range (WR) and specify the number of forward gears or whether the transmissions a continuously variable design (CVT). If the transmission is of a hybrid type, that should also be indicated.

17. ''Truckline'' means the name assigned by the Environmental Protection Agency to a

different group of vehicles within a make or car division in accordance with that agency's 2001 model year pickup, van (cargo vans and passenger vans are considered separate truck lines), and special purpose vehicle criteria.

18. ''Variants of existing engines'' means versions of an existing basic engine that differ from that engine in terms of displacement, method of aspiration, induction system or that weigh at least 25 pounds more or less than that engine.

II. Assumptions

All assumptions concerning emission standards, damageability regulations, safety standards, etc., should be listed and described in detail by the respondent.

III. Specifications—Passenger Car Data

Go to *http://www.nhtsa.dot.gov/cars/rules/CAFE/rulemaking.htm* for spreadsheet templates.

1. Identify all passenger car models offered for sale in MY 2003 whose production you project discontinuing before MY 2008 and identify the last model year in which each will be offered.

2. Identify all basic engines offered by respondent in MY 2003 passenger cars which respondent projects it will cease to offer for sale in passenger cars before MY 2008, and identify the last model year in which each will be offered.

3. For each model year 2003–2012, list all projected passenger car model types and provide the information specified below for each model type. Model types that are essentially identical except for their nameplates (*e.g.*, Chrysler Sebring/Dodge Stratus) may be combined into one item. Engines having the same displacement but belonging to different engine families are to be grouped separately. Separate tables should be provided for domestic and import passenger car fleets. Within a domestic or import passenger car fleet, the vehicles are to be sorted first by passenger car line, second by basic engine, and third by transmission type. Spreadsheet templates can be found at *http://www.nhtsa.dot.gov/cars/rules/CAFE/rulemaking.htm*. These templates include codes and definitions for the data that the Agency is seeking.

a. General Information
1. A unique identifying number or code assigned to each model.
2. Vehicle manufacturer.
3. Vehicle model (*e.g.*, Camry)
4. Vehicle nameplate (*e.g.*, Camry Solara)
5. Weighted average fuel economy
6. Engine code
(a) Engine manufacturer
(b) Engine name
(c) Engine's country of origin
(d) Fuel
(e) Engine oil viscosity
(f) Combustion cycle
(g) Air/fuel ratio
(h) Fuel system
(i) Aspiration
(j) Valvetrain design
(k) Valve actuation/timing
(l) Valve lift
(m) Number of engine cylinders
(n) Configuration
(o) Valves per cylinder
(p) Cylinder deactivation
(q) Engine displacement
(r) Compression ratio (Min)
(s) Compression ratio (Max)
(t) Horsepower
(u) Torque
7. Transmission code
(a) Transmission manufacturer
(b) Name of transmission
(c) Transmission's country of origin
(d) Transmission type
(e) Number of forward gears
(f) Control
(g) Logic
(h) Gear ratios for all forward gears
(i) Reverse gear ratio
(j) Torque converter ratio
(k) Axle ratio
(l) Torque converter lockup/bypass status
(m) Transmission fluid specification
(n) Transmission lubricant viscosity
8. Domestic or Import
b. Projected U.S. sales
c. Vehicle information
1. Style (*e.g.*, convertible, sedan, coupe)
2. EPA Size Class
3. Construction (*e.g.*, Unibody, ladder)
4. Drive (*e.g.*, rear wheel drive, front wheel drive, all-wheel drive, 4-wheel drive)
5. Final drive ratio
6. N/V
7. Front axle lubricant viscosity
8. Rear axle lubricant viscosity
9. Overall length (per code L103 of SAE J1100, revised July 2002)
10. Overall width (per code W116 of SAE J1100, revised July 2002)
11. Overall height (per code H100 of SAE J1100, revised July 2002)
12. Wheelbase (per code L101 of SAE J1100, revised July 2002)
13. Track width (front) (per code W101–1 of SAE J1100, revised July 2002)
14. Track width (rear) (per code W101–2 of SAE J1100, revised July 2002)
15. Ground clearance (per 49 CFR 323.5)
16. Front axle clearance (per 49 CFR 323.5)
17. Rear axle clearance (per 49 CFR 323.5)
18. Angle of approach (per 49 CFR 323.5)
19. Breakover angle (per 49 CFR 323.5)
20. Angle of departure (per 49 CFR 323.5)
21. Height of the center of gravity (per NCAP Static Stability Factor procedures)
22. Curb weight, in lbs.
23. Test weight, in lbs.
24. Power absorption unit setting, in horsepower.
25. Gross Vehicle Weight Rating, in lbs.
26. Towing capacity (standard), in lbs.
27. Towing capacity (maximum), in lbs.
28. Payload, in lbs.
29. Minimum designated seating positions
30. Maximum designated seating positions
31. Designated seating positions in the first row
32. Cargo volume behind the front row in ft^3 (per Table 28 of SAE J1100, revised July 2002)
33. Designated seating positions in the second row
34. Capability of second row seats to fold flat
35. Cargo volume behind the second row in ft^3 (per Table 28 of SAE J1100, revised July 2002)
36. Designated seating positions in the third row
37. Capability of third row seats to fold flat
38. Cargo volume behind the third row in ft^3 (per Table 28 of SAE J1100, revised July 2002)
39. Enclosed volume in ft^3
40. Passenger volume in ft^3 (The volume measured using SAE Recommended Practice J1100 as per EPA Fuel economy regulations, reg. 40 CFR 600.315–82 ''Classes of Comparable Automobiles.'' This number is what automobile manufacturers calculate and submit to EPA.)
41. Cargo volume index (per Table 28 of SAE J1100, revised July 2002)
42. Open box length (per L506 of SAE J1100, revised July 2002)
43. Open box width (min) (per W201 of SAE J1100, revised July 2002)
44. Open box width (max) (per W500 of SAE J1100, revised July 2002)
45. Open box area
46. Open box height (per H503 of SAE J1100, revised July 2002)
47. Fuel capacity in gallons
48. Tire rolling resistance, Crr
49. Frontal area
50. Aerodynamic drag coefficient, Cd
d. Hybridization
1. Type
2. Voltage or pressure
3. Energy storage capacity, in MJ
4. Battery type
5. Energy transfer
6. Percentage of braking energy recovered and stored
7. Percentage of maximum motive power provided by stored energy system
e. Planning and assembly
1. Predecessor model
2. Last freshening
3. Next freshening
4. Last redesign
5. Next redesign
6. Domestic content
7. Final assembly city
8. Final assembly state
9. Final assembly country
f. Manufacturers' suggested retail price (in constant 2003 dollars)
g. Emissions
1. EPA class (LDV, LLDT, HLDT, MDPV)
2. EPA certification bin
3. LEV class

The agency also requests that each manufacturer provide an estimate of its overall domestic and passenger car CAFE for each model year. This estimate should be included as an entry in the spreadsheets that are submitted to the agency.

4. Does respondent project introducing any variants of existing basic engines or any new basic engines, other than those mentioned in your response to Question 3, in its passenger car fleets in MYs 2003–2012? If so, for each basic engine or variant indicate:

a. The projected year of introduction.

b. Type (*e.g.*, spark ignition, direct injection diesel, 2-cycle, alternative fuel use).

c. Displacement. (If engine has variable displacement, please provide the minimum and maximum displacement)

d. Type of induction system (*e.g.*, fuel injection with turbocharger, naturally aspirated).

e. Cylinder configuration (*e.g.*, V–8, V–6, I–4).

f. Number of valves per cylinder (*e.g.*, 2, 3, 4).

g. Valvetrain Design (*e.g.*, overhead valve, overhead camshaft,

h. Valve technology (*e.g.*, variable valve timing, variable valve lift and timing, intake valve throttling, camless valve actuation, etc.)

i. Horsepower and torque ratings,

j. Models in which engines are to be used, giving the introduction model year for each model if different from ''a,'' above.

5. Relative to MY 2003 levels, for MYs 2005–2012, please provide information, by model and as an average effect on a manufacturer's entire passenger car fleet, on the weight and/or fuel economy impacts of the following standards or equipment:

a. Federal Motor Vehicle Safety Standard (FMVSS 208) Automatic Restraints

b. FMVSS 201 Occupant Protection in Interior Impact

c. Voluntary installation of safety equipment (*e.g.*, antilock brakes)

d. Environmental Protection Agency regulations

e. California Air Resources Board requirements

f. Other applicable motor vehicle regulations affecting fuel economy.

6. For each of the model years 2003–2012, and for each passenger car model projected to be manufactured by respondent (if answers differ for the various models), provide the requested information on new technology applications for each of items ''6a'' through ''6r'' listed below:

(i) description of the nature of the technological improvement;

(ii) the percent fuel economy improvement averaged over the model;

(iii) the basis for your answer to 6(ii), (*e.g.*, data from dynamometer tests conducted by respondent, engineering analysis, computer simulation, reports of test by others);

(iv) the percent production implementation rate and the reasons limiting the implementation rate;

(v) a description of the 2003 baseline technologies and the 2003 implementation rate; and

(vi) the reasons for differing answers you provide to items (ii) and (iv) for different models in each model year. Include as a part of your answer to 6(ii) and 6(iv) a tabular presentation, a sample portion of which is shown in Table III-A.

a. Improved automatic transmissions. Projections of percent fuel economy improvements should include benefits of lock-up or bypassed torque converters, electronic control of shift points and torque converter lock-up, and other measures which should be described.

b. Improved manual transmissions. Projections of percent of fuel economy improvement should include the benefits of increasing mechanical efficiency, using improved transmission lubricants, and other measures (specify).

c. Overdrive transmissions. If not covered in ''a'' or ''b'' above, project the percentage of fuel economy improvement attributable to overdrive transmissions (integral or auxiliary gear boxes), two-speed axles, or other similar devices intended to increase the range of available gear ratios. Describe the devices to be used and the application by model, engine, axle ratio, etc.

d. Use of engine crankcase lubricants of lower viscosity or with additives to improve friction characteristics or accelerate engine break-in, or otherwise improved lubricants to lower engine friction horsepower. When describing the 2003 baseline, specify the viscosity of and any fuel economy-improving additives used in the factory-fill lubricants.

e. Reduction of engine parasitic losses through improvement of engine-driven accessories or accessory drives. Typical engine-driven accessories include water pump, cooling fan, alternator, power steering pump, air conditioning compressor, and vacuum pump.

f. Reduction of tire rolling losses, through changes in inflation pressure, use of materials or constructions with less hysteresis, geometry changes (*e.g.*, reduced aspect ratio), reduction in sidewall and tread deflection, and other methods. When describing the 2003 baseline, include a description of the tire types used and the percent usage rate of each type.

g. Reduction in other driveline losses, including losses in the non-powered wheels, the differential assembly, wheel bearings, universal joints, brake drag losses, use of improved lubricants in the differential and wheel bearing, and optimizing suspension geometry (*e.g.*, to minimize tire scrubbing loss).

h. Reduction of aerodynamic drag.

i. Turbocharging or supercharging.

j. Improvements in the efficiency of 4-cycle spark ignition engines including (1) increased compression ratio; (2) leaner air-to-fuel ratio; (3) revised combustion chamber configuration; (4) fuel injection; (5) electronic fuel metering; (6) interactive electronic control of engine operating parameters (spark advance, exhaust gas recirculation, air-to-fuel ratio); (8) variable valve timing or valve lift; (9) multiple valves per cylinder; (10) cylinder disablement; (11) friction reduction by means such as low tension piston rings and roller cam followers; (12) higher temperature operation; and (13) other methods (specify).

k. Gasoline direct injection engines.

l. Naturally aspirated diesel engines, with direct or indirect fuel injection.

m. Turbocharged or supercharged diesel engines with direct or indirect fuel injection.

n. Stratified-charge reciprocating or rotary engines, with direct or indirect fuel injection.

o. Two cycle spark ignition engines.

p. Use of hybrid drivetrains

q. Use of fuel cells; provide a thorough description of the fuel cell technology employed, including fuel type and power output.

r. Other technologies for improving fuel economy or efficiency.

7. For each model of respondent's passenger car fleet, projected to be manufactured in each of MYs 2003–2012, describe the methods used to achieve reductions in average test weight. For each specified model year and model, describe the extent to which each of the following methods for reducing vehicle weight will be used.

a. Substitution of materials.

b. ''Downsizing'' of existing vehicle design to reduce weight while maintaining interior roominess and comfort for passengers, and utility, *i.e.*, the same or approximately the same, payload and cargo volume, using the same basic body configuration and driveline layout as current counterparts.

c. Use of new vehicle body configuration concepts, which provides reduced weight for approximately the same payload and cargo volume.

8. Indicate any MY 2004–2012 passenger car model types that have higher average test weights than comparable MY 2003 model types. Describe the reasons for any weight increases (*e.g.*, increased option content, less use of premium materials) and provide supporting justification.

9. For each new or redesigned vehicle identified in response to Question 3 and each new engine or fuel economy improvement identified in your response to Questions 3, 4, 5, and 6, provide your best estimate of the following, in terms of constant 2003 dollars:

(a) Total capital costs required to implement the new/redesigned model or improvement according to the implementation schedules specified in your response. Subdivide the capital costs into tooling, facilities, launch, and engineering costs.

(b) The maximum production capacity, expressed in units of capacity per year, associated with the capital expenditure in (a) above. Specify the number of production shifts on which your response is based and define ''maximum capacity'' as used in your answer.

(c) The actual capacity that is planned to be used each year for each new/redesigned model or fuel economy improvement.

(d) The increase in variable costs per affected unit, based on the production volume specified in (b) above.

(e) The equivalent retail price increase per affected vehicle for each new/redesigned model or improvement. Provide an example describing methodology used to determine the equivalent retail price increase.

10. Please provide respondent's actual and projected U.S. passenger car sales, for each model year from 2003 to 2012, inclusive. Please subdivide the data into the following vehicle categories:

i. Two-Seater Car (*e.g.*, Chevrolet Corvette, Ford Thunderbird, Honda Insight)

ii. Mini-compact Car (*e.g.*, Audi TT Coupe, Lexus SC 300/430, Mitsubishi Eclipse Spyder)

iii. Subcompact Car (*e.g.*, Ford Mustang, Toyota Celica, Volkswagen New Beetle)

iv. Compact Car (*e.g.*, Chevrolet Cobalt, Dodge Neon, Ford Focus)

v. Midsize Car (*e.g.*, Chevrolet Malibu, Dodge Stratus, Honda Accord, Toyota Camry)

vi. Large Car (*e.g.*, Chevrolet Impala, Dodge Intrepid, Ford Crown Victoria)

vii. Small Station Wagon (*e.g.*, BMW 325 Sport Wagon, Subaru Impreza Wagon, Volkswagen Jetta Wagon)

viii. Midsize Station Wagon (*e.g.*, Ford Taurus Wagon, Saab 9–5 Wagon, Subaru Legacy Wagon)

See Table III–B for a sample format.

11. Please provide your estimates of projected *total industry* U.S. passenger car sales for each model year from 2003 through 2012, inclusive. Please subdivide the data

into the vehicle categories listed in the sample format in Table III–C.

12. Please provide your company's assumptions for U.S. gasoline and diesel fuel prices during 2003 through 2012.

13. Please provide projected production capacity available for the North American market (at standard production rates) for each of your company's passenger carline designations during MYs 2003–2012.

14. Please provide your estimate of production lead time for new models, your expected model life in years, and the number of years over which tooling costs are amortized.

Note: The parenthetical numbers in Tables III–A through C refer to the items in Section III, *Specifications.*

TABLE III–A—TECHNOLOGY IMPROVEMENTS

Technological improvement	Baseline technology	Percent fuel economy improvement, (percent)	Basis for improvement estimate	Models on which technology is applied	Production share of model with technological improvement				
					2003	2004	2005	2006	2007+
(6a) Improved Auto Trans.									
LT–1		7.0			0	0	15	25	55
LT–2		6.5			0	0	0	20	25
LT–3		5.0			0	10	30	60	60
(6b) Improved Manual Trans.									
LV–1		1.0			2	5	5	5	5
U–1		0.7			0	0	0	8	10

TABLE III–B—ACTUAL AND PROJECTED U.S. PASSENGER CAR SALES

Apex motors passenger car sales projections						
Model line	Model year					
	2003	2004	2005	2006	2007	2008+
Two-Seater	43,500					
Mini-compact Car	509,340					
Subcompact Car	120,000					
Compact Car	60,000					
Midsize Car	20,000					
Large Car	29,310					
Small Station Wagon	54,196					
Midsize Station Wagon	38,900					
Other (Specify)						
Total	TBD					

TABLE III–C—TOTAL U.S. PASSENGER CAR SALES

Model type	2003	2004	2005	2006	2007	2008+
a. Two-Seater						
b. Mini-compact						
c. Subcompact						
d. Compact						
e. Midsize						
f. Large						
g. Small Station Wagon						
h. Midsize Station Wagon						
i. Other (Specify)						
Total Passenger Cars						

IV. Specifications—Light Truck Data

Go to *http://www.nhtsa.dot.gov/cars/rules/CAFE/rulemaking.htm* for spreadsheet templates.

1. Identify all light truck models currently offered for sale in MY 2003 whose production you project discontinuing before MY 2008 and identify the last model year in which each will be offered.

2. Identify all basic engines offered by respondent in MY 2003 light trucks which respondent projects it will cease to offer for sale in light trucks before MY 2008, and identify the last model year in which each will be offered.

3. For each model year 2003–2012, list all projected trucklines and provide the information specified below for each model type. Model types that are essentially identical except for their nameplates (*e.g.*, Chrysler Town & Country/Dodge Caravan) may be combined into one item. Engines having the same displacement but belonging to different engine families are to be grouped separately. Within the fleet, the vehicles are to be sorted first by truckline, second by basic engine, and third by transmission type. Spreadsheet templates can be found at *http://www.nhtsa.dot.gov/cars/rules/CAFE/rulemaking.htm.* These templates include codes and definitions for the data that the Agency is seeking.

a. General Information

1. A unique identifying number or code assigned to each model.

2. Vehicle manufacturer.

3. Vehicle model (*e.g.*, Camry)

4. Vehicle nameplate (*e.g.*, Camry Solara)

5. Weighted average fuel economy

6. Engine code
A. Engine manufacturer
B. Engine name
C. Engine's country of origin
D. Fuel
E. Engine oil viscosity
F. Combustion cycle
G. Air/fuel ratio
H. Fuel system
I. Aspiration
J. Valvetrain design
K. Valve actuation/timing
L. Valve lift
M. Number of engine cylinders
N. Configuration
O. Valves per cylinder
P. Cylinder deactivation
Q. Engine displacement
R. Compression ratio (Min)
S. Compression ratio (Max)
T. Horsepower
U. Torque
7. Transmission code
≤A. Transmission manufacturer
B. Name of transmission
C. Transmission's country of origin
D. Transmission type
E. Number of forward gears
F. Control
G. Logic
H. Gear ratios for all forward gears
I. Reverse gear ratio
J. Torque converter ratio
K. Axle ratio
L. Torque converter lockup/bypass status
M. Transmission fluid specification
N. Transmission lubricant viscosity
b. Projected U.S. sales
c. Vehicle information
1. Style (*e.g.*, pickup, van, utility)
2. EPA Size Class
3. Construction (*e.g.*, unibody, ladder)
4. Drive (*e.g.*, rear wheel drive, front wheel drive, all-wheel drive, 4-wheel drive)
5. Final drive ratio
6. N/V
7. Front axle lubricant viscosity
8. Rear axle lubricant viscosity
9. Overall length (per code L103 of SAE J1100, revised July 2002)
10. Overall width (per code W116 of SAE J1100, revised July 2002)
11. Overall height (per code H100 of SAE J1100, revised July 2002)
12. Wheelbase (per code L101 of SAE J1100, revised July 2002)
13. Track width (front) (per code W101–1 of SAE J1100, revised July 2002)
14. Track width (rear) (per code W101–2 of SAE J1100, revised July 2002)
16. Front axle clearance (per 49 CFR 323.5)
17. Rear axle clearance (per 49 CFR 323.5)
18. Angle of approach (per 49 CFR 323.5)
19. Breakover angle (per 49 CFR 323.5)
20. Angle of departure (per 49 CFR 323.5)
21. Height of the center of gravity (per NCAP Static Stability Factor procedures)
22. Curb weight, in lbs.
23. Test weight, in lbs.
24. Power absorption unit setting, in horsepower
25. Gross Vehicle Weight Rating, in lbs.
26. Towing capacity (standard), in lbs.
27. Towing capacity (maximum), in lbs.
28. Payload, in lbs.
29. Minimum designated seating positions
30. Maximum designated seating positions
31. Designated seating positions in the first row
32. Cargo volume behind the front row in ft^3 (per Table 28 of SAE J1100, revised July 2002)
33. Designated seating positions in the second row
34. Capability of second row seats to fold flat
35. Cargo volume behind the second row in ft^3 (per Table 28 of SAE J1100, revised July 2002)
36. Designated seating positions in the third row
37. Capability of third row seats to fold flat
38. Cargo volume behind the third row in ft^3 (per Table 28 of SAE J1100, revised July 2002)
39. Enclosed volume in ft^3
40. Passenger volume in ft^3 (The volume measured using SAE Recommended Practice J1100 as per EPA Fuel economy regulations, reg. 40 CFR 600.315–82 ''Classes of Comparable Automobiles.'' This number is what automobile manufacturers calculate and submit to EPA.)
41. Cargo volume index (per Table 28 of SAE J1100, revised July 2002)
42. Open box length (per L506 of SAE J1100, revised July 2002)
43. Open box width (min) (per W201 of SAE J1100, revised July 2002)
44. Open box width (max) (per W500 of SAE J1100, revised July 2002)
45. Open box area
46. Open box height (per H503 of SAE J1100, revised July 2002)
47. Fuel capacity in gallons
48. Tire rolling resistance, Crr
49. Frontal area
50. Aerodynamic drag coefficient, Cd
d. Hybridization
1. Type
2. Voltage or pressure
3. Energy storage capacity, in MJ
4. Battery type
5. Energy transfer
6. Percentage of braking energy recovered and stored
7. Percentage of maximum motive power provided by stored energy system
e. Planning and assembly
1. Predecessor model
2. Last freshening
3. Next freshening
4. Last redesign
5. Next redesign
6. Domestic content
7. Final assembly city
8. Final assembly state
9. Final assembly country
f. Manufacturers' suggested retail price (in constant 2003 dollars)
g. Emissions
1. EPA class (LDV, LLDT, HLDT, MDPV)
2. EPA certification bin
3. LEV class

The agency also requests that each manufacturer provide an estimate of its overall light truck CAFE for each model year. This estimate should be included as an entry in the spreadsheets that are submitted to the agency.

4. Does respondent project introducing any variants of existing basic engines or any new basic engines, other than those mentioned in your response to Question 3, in its light truck fleets in MYs 2003–2012? If so, for each basic engine or variant indicate:

a. The projected year of introduction,

b. Type (*e.g.*, spark ignition, direct injection diesel, 2-cycle, alternative fuel use),

c. Displacement (If engine has variable displacement, please provide the minimum and maximum displacement),

d. Type of induction system (*e.g.*, fuel injection with turbocharger, naturally aspirated),

e. Cylinder configuration (*e.g.*, V–8, V–6, I–4),

f. Number of valves per cylinder (*e.g.*, 2, 3, 4),

g. Valvetrain design (*e.g.*, overhead valve, overhead camshaft,

h. Valve technology (*e.g.*, variable valve timing, variable valve lift and timing, intake valve throttling, camless valve actuation, etc.)

i. Horsepower and torque ratings,

j. Models in which engines are to be used, giving the introduction model year for each model if different from ''a,'' above.

5. Relative to MY 2003 levels, for MYs 2005–2012, please provide information, by truckline and as an average effect on a manufacturer's entire light truck fleet, on the weight and/or fuel economy impacts of the following standards or equipment:

a. Federal Motor Vehicle Safety Standard (FMVSS 208) Automatic Restraints

b. FMVSS 201 Occupant Protection in Interior Impact

c. Voluntary installation of safety equipment (*e.g.*, antilock brakes)

d. Environmental Protection Agency regulations

e. California Air Resources Board requirements

f. Other applicable motor vehicle regulations affecting fuel economy.

6. For each of the model years 2003–2012, and for each light truck model projected to be manufactured by respondent (if answers differ for the various models), provide the requested information on new technology applications for each of items ''6a'' through ''6r'' listed below:

(i) description of the nature of the technological improvement;

(ii) the percent fuel economy improvement averaged over the model;

(iii) the basis for your answer to 6(ii), (*e.g.*, data from dynamometer tests conducted by respondent, engineering analysis, computer simulation, reports of test by others);

(iv) the percent production implementation rate and the reasons limiting the implementation rate;

(v) a description of the 2003 baseline technologies and the 2003 implementation rate; and

(vi) the reasons for differing answers you provide to items (ii) and (iv) for different models in each model year. Include as a part of your answer to 6(ii) and 6(iv) a tabular presentation, a sample portion of which is shown in Table IV-A.

a. Improved automatic transmissions. Projections of percent fuel economy improvements should include benefits of lock-up or bypassed torque converters, electronic control of shift points and torque

converter lock-up, and other measures which should be described.

b. Improved manual transmissions. Projections of percent of fuel economy improvement should include the benefits of increasing mechanical efficiency, using improved transmission lubricants, and other measures (specify).

c. Overdrive transmissions. If not covered in ''a'' or ''b'' above, project the percentage of fuel economy improvement attributable to overdrive transmissions (integral or auxiliary gear boxes), two-speed axles, or other similar devices intended to increase the range of available gear ratios. Describe the devices to be used and the application by model, engine, axle ratio, etc.

d. Use of engine crankcase lubricants of lower viscosity or with additives to improve friction characteristics or accelerate engine break-in, or otherwise improved lubricants to lower engine friction horsepower. When describing the 2002 baseline, specify the viscosity of and any fuel economy-improving additives used in the factory-fill lubricants.

e. Reduction of engine parasitic losses through improvement of engine-driven accessories or accessory drives. Typical engine-driven accessories include water pump, cooling fan, alternator, power steering pump, air conditioning compressor, and vacuum pump.

f. Reduction of tire rolling losses, through changes in inflation pressure, use of materials or constructions with less hysteresis, geometry changes (e.g., reduced aspect ratio), reduction in sidewall and tread deflection, and other methods. When describing the 2002 baseline, include a description of the tire types used and the percent usage rate of each type.

g. Reduction in other driveline losses, including losses in the non-powered wheels, the differential assembly, wheel bearings, universal joints, brake drag losses, use of improves lubricants in the differential and wheel bearing, and optimizing suspension geometry (*e.g.*, to minimize tire scrubbing loss).

h. Reduction of aerodynamic drag.

i. Turbocharging or supercharging.

j. Improvements in the efficiency of 4-cycle spark ignition engines including (1) increased compression ratio; (2) leaner air-to-fuel ratio; (3) revised combustion chamber configuration; (4) fuel injection; (5) electronic fuel metering; (6) interactive electronic control of engine operating parameters (spark advance, exhaust gas recirculation, air-to-fuel ratio); (8) variable valve timing or valve lift; (9) multiple valves per cylinder; (10) cylinder deactivation; (11) friction reduction by means such as low tension piston rings and roller cam followers; (12) higher temperature operation; and (13) other methods (specify).

k. Direct injection gasoline engines.

l. Naturally aspirated diesel engines, with direct or indirect fuel injection.

m. Turbocharged or supercharged diesel engines with direct or indirect fuel injection.

n. Stratified-charge reciprocating or rotary engines, with direct or indirect fuel injection.

o. Two cycle spark ignition engines.

p. Use of hybrid drivetrains

q. Use of fuel cells; provide a thorough description of the fuel cell technology employed, including fuel type and power output.

r. Other technologies for improving fuel economy or efficiency.

7. For each model of respondent's light truck fleet projected to be manufactured in each of MYs 2003–2012, describe the methods used to achieve reductions in average test weight. For each specified model year and model, describe the extent to which each of the following methods for reducing vehicle weight will be used. Separate listings are to be used for 4x2 light trucks and 4x4 light trucks.

a. Substitution of materials.

b. ''Downsizing'' of existing vehicle design to reduce weight while maintaining interior roominess and comfort for passengers, and utility, *i.e.*, the same or approximately the same, payload and cargo volume, using the same basic body configuration and driveline layout as current counterparts.

c. Use of new vehicle body configuration concepts, which provides reduced weight for approximately the same payload and cargo volume.

8. Indicate any MY 2003–2012 light truck model types that have higher average test weights than comparable MY 2002 model types. Describe the reasons for any weight increases (*e.g.*, increased option content, less use of premium materials) and provide supporting justification.

9. For each new or redesigned vehicle identified in response to Question 3 and each new engine or fuel economy improvement identified in your response to Questions 3, 4, 5, and 6, provide your best estimate of the following, in terms of constant 2003 dollars:

(a) Total capital costs required to implement the new/redesigned model or improvement according to the implementation schedules specified in your response. Subdivide the capital costs into tooling, facilities, launch, and engineering costs.

(b) The maximum production capacity, expressed in units of capacity per year, associated with the capital expenditure in (a) above. Specify the number of production shifts on which your response is based and define ''maximum capacity'' as used in your answer.

(c) The actual capacity that is planned to be used each year for each new/redesigned model or fuel economy improvement.

(d) The increase in variable costs per affected unit, based on the production volume specified in (b) above.

(e) The equivalent retail price increase per affected vehicle for each new/redesigned model or improvement. Provide an example describing methodology used to determine the equivalent retail price increase.

10. Please provide respondent's actual and projected U.S. light truck sales, 4x2 and 4x4, 0–8,500 lbs. GVWR and 8501–10,000 lbs., GVWR for each model year from 2002 through 2004, inclusive. Please subdivide the data into the following vehicle categories:

i. Standard Pickup Heavy (*e.g.*, C2500/3500, F–250/350)

ii. Standard Pickup Light (*e.g.*, C1500, F–150)

iii. Compact Pickup (*e.g.*, S–10, Ranger, Dakota)

iv. Standard Cargo Vans Heavy (*e.g.*, G3500, E–250/350)

v. Standard Cargo Vans Light (*e.g.*, G1500/2500, E–150)

vi. Standard Passenger Vans Heavy (*e.g.*, G3500, E–250/350)

vii. Standard Passenger Vans Light (*e.g.*, G1500/2500, E–150)

viii. Compact Cargo Vans (*e.g.*, Astro/Safari)

ix. Compact Passenger Vans (*e.g.*, Sienna, Odyssey, Caravan)

x. Full-size Sport Utilities (*e.g.*, Tahoe, Expedition, Sequoia)

xi. Mid-size Sport Utilities (*e.g.*, Trailblazer, Explorer)

xii. Compact Utilities (*e.g.*, Wrangler, RAV4)

xiii. Crossover Vehicle (*e.g.*, Pacifica, Rendezvous, RX 330)

xiv. Other (*e.g.*, Avalanche)

See Table IV–B for a sample format.

11. Please provide your estimates of projected *total industry* U.S. light (0–10,000 lbs, GVWR) truck sales for each model year from 2003 through 2012, inclusive. Please subdivide the data into 4x2 and 4x4 sales and into the vehicle categories listed in the sample format in Table IV–C.

12. Please provide your company's assumptions for U.S. gasoline and diesel fuel prices during 2003 through 2012.

13. Please provide projected production capacity available for the North American market (at standard production rates) for each of your company's light truckline designations during MYs 2003–2012.

14. Please provide your estimate of production lead-time for new models, your expected model life in years, and the number of years over which tooling costs are amortized.

Note: The parenthetical numbers in Tables IV–A refer to the items in Section IV, *Specifications*.

TABLE IV–A—TECHNOLOGY IMPROVEMENTS

Technological improvement	Baseline technology	Percent fuel economy improvement (percent)	Basis for improvement estimate	Models on which technology is applied	Production share of model with technological improvement				
					2003	2004	2005	2006	2007+
(6a.) Improved Auto Trans. LT–1		7.0			0	0	15	25	55

TABLE IV–A—TECHNOLOGY IMPROVEMENTS—Continued

Technological improvement	Baseline technology	Percent fuel economy improvement (percent)	Basis for improvement estimate	Models on which technology is applied	Production share of model with technological improvement				
					2003	2004	2005	2006	2007+
LT–2		6.5			0	0	0	20	25
LT–3		5.0			0	10	30	60	60
(6b) Improved Manual Trans.									
LV–1		1.0			2	5	5	5	5
U–1		0.7			0	0	0	8	10

TABLE IV–B—ACTUAL AND PROJECTED U.S. LIGHT TRUCK SALES

Amalgamated Motors light truck sales projections						
Model line	Model year					
	2003	2004	2005	2006	2007	2008+
Compact Pickup	43,500					
Standard Pickup—Light	209,340					
Standard Pickup—Heavy	120,000					
Compact Cargo Van	60,000					
Standard Cargo Van—Light	20,000					
Standard Cargo Van—Heavy	29,310					
Compact Passenger Van/Minivan	54,196					
Standard Passenger Van—Light	38,900					
Standard Passenger Van—Heavy.						
Compact Sport Utility						
Mid-Size Sport Utility						
Full-Size Sport Utility						
Crossover Vehicle						
Other (Specify)						
Total	TBD					

TABLE IV–C—TOTAL U.S. LIGHT TRUCK SALES

Model type	2003	2004	2005	2006	2007	2008+
Compact Pickup						
Standard Pickup—Light						
Standard Pickup—Heavy						
Compact Cargo Van						
Standard Cargo Van—Light						
Standard Cargo Van—Heavy						
Compact Passenger Van/Minivan						
Standard Passenger Van—Light						
Standard Passenger Van—Heavy						
Compact Sport Utility						
Mid-Size Sport Utility						
Full-size Sport Utility						
Crossover Vehicle						
Other (Specify)						
Total						

[FR Doc. 03–31891 Filed 12–22–03; 3:44 pm]
BILLING CODE 4910–59–P

DEPARTMENT OF COMMERCE

National Oceanic and Atmospheric Administration

50 CFR Part 648

[I.D. 122203A]

RIN 0648–AN17

Magnuson-Stevens Fishery Conservation and Management Act Provisions; Fisheries of the Northeastern United States; Northeast (NE) Multispecies Fishery; Amendment 13

AGENCY: National Marine Fisheries Service (NMFS), National Oceanic and Atmospheric Administration (NOAA), Commerce.

ACTION: Notice of availability of a fishery management plan amendment; request for comments.

SUMMARY: NMFS announces that the New England Fishery Management Council (Council) has submitted Amendment 13, incorporating the Draft Final Supplemental Environmental Impact Statement (FSEIS) to the NE Multispecies Fishery Management Plan (FMP) for Secretarial review and is requesting comments from the public. Amendment 13 was developed by the Council to end overfishing and rebuild NE multispecies (groundfish) stocks managed under the authority of the Magnuson-Stevens Fishery Conservation and Management Act (Magnuson-Stevens Act), and to make other changes in the management of the groundfish fishery. The proposed measures include: Changes in the days-at-sea (DAS) baseline for determining historical participation in the groundfish fishery; DAS reductions from the baseline; creation of new categories of DAS and criteria for their allocation and use in the fishery; changes in minimum fish size and possession limits for recreationally caught fish; a new limited access permit category for Handgear vessels; elimination of the northern shrimp fishery exemption line; access to groundfish closed areas for tuna purse seiners; an exemption program for southern New England scallop dredge vessels; modifications to Vessel Monitoring System requirements; changes to procedures for exempted fisheries; changes to the process for making periodic adjustments to management measures in the groundfish fishery; revisions to trip limits for cod and yellowtail flounder; changes in gear restrictions, including minimum mesh sizes and gillnet limits; a DAS Transfer Program; a DAS Leasing Program; implementing measures for the U.S./Canada Resource Sharing Understanding for cod, haddock, and yellowtail flounder on Georges Bank (GB); Special Access Programs (SAPs) to allow targeted harvest of healthy stocks of groundfish; revisions to overfishing definitions and control rules; measures to protect Essential Fish Habitat (EFH); new reporting requirements; sector allocation procedures; and a GB Cod Hook Gear Sector Allocation. The effort-reduction measures in Amendment 13 are intended to end overfishing on all stocks and constitute rebuilding programs for those groundfish stocks that require rebuilding. Other measures are intended to provide flexibility and business options for permit holders, such as allowing the fishery to pursue the healthy groundfish stocks, and DAS transfer and leasing options.

DATES: Comments must be received on or before February 27, 2004.

ADDRESSES: Comments on Amendment 13 should be sent to Patricia A. Kurkul, Regional Administrator, NMFS, Northeast Regional Office, One Blackburn Drive, Gloucester, MA 01930. Mark the outside of the envelope, ''Comments on Groundfish Amendment 13.'' Comments may also be sent via facsimile (fax) to (978) 281–9135. Comments will not be accepted if submitted via e-mail or the Internet.

Copies of Amendment 13, the FSEIS, Regulatory Impact Review (RIR), and the Preliminary Regulatory Economic Evaluation (PREE) are available from Paul J. Howard, Executive Director, New England Fishery Management Council, 50 Water Street, Mill 2, Newburyport, MA 01950.

Copies of the Initial Regulatory Flexibility Analysis (IRFA) are available from the Regional Administrator at the address above.

FOR FURTHER INFORMATION CONTACT: Thomas Warren, Fishery Policy Analyst, phone: 978–281–9347, fax: 978–281–9135; email: *thomas.warren@noaa.gov*.

SUPPLEMENTARY INFORMATION: The Council has been developing Amendment 13 since 1999, in order to bring the FMP into conformance with all Magnuson-Stevens Act requirements, including ending overfishing and rebuilding all overfished groundfish stocks.

On December 28, 2001, a decision was rendered by the U.S. District Court for the District of Columbia (Court) on a lawsuit brought by the Conservation Law Foundation, Center for Marine Conservation, National Audubon Society and Natural Resources Defense Council against NMFS (*Conservation Law Foundation, et al.*, v. *Evans, et al.*, Case No. 00CVO1134, (D.D.C., December 28, 2001)). The lawsuit alleged that Framework Adjustment 33 to the FMP violated the overfishing, rebuilding and bycatch provisions of the Magnuson-Stevens Act (18 U.S.C. 1801, *et seq.*), as amended by the Sustainable Fisheries Act (SFA), and the Court granted plaintiffs' Motion for Summary Judgment on all counts. The Court did not impose a remedy, but instead asked the parties to the lawsuit to propose remedies consistent with the Court's findings.

From April 5–9, 2002, plaintiffs, defendants and intervenors engaged in Court-assisted mediation to try to agree upon mutually acceptable short-term and long-term solutions to present to the Court as a possible settlement. Although these discussions ended with no settlement, several of the parties continued mediation and filed with the Court a Settlement Agreement Among Certain Parties (Settlement Agreement) on April 16, 2002. The Settlement Agreement called for short-term measures to reduce overfishing while the Council completed its development of Amendment 13.

On April 29, 2002, NMFS published an interim final rule (67 FR 21139) under the authority of section 304(e), consistent with section 305(c), of the Magnuson-Stevens Act, which allows for interim measures to reduce overfishing until an amendment to stop overfishing and rebuild fish stocks is implemented, and to implement the short-term measures called for by the Settlement Agreement. On May 6, 2002 (67 FR 30331), NMFS corrected the April 29, 2002, interim final rule to bring it into full compliance with the Order. NMFS further amended the April 29, 2002, interim final rule on June 5, 2002 (67 FR 38608) to bring the regulations into conformance with a May 23, 2002, Order issued by the Court in response to a motion for reconsideration. NMFS proposed additional, more restrictive interim measures on July 1, 2002 (67 FR 44139), and implemented those measures on August 1, 2002 (67 FR 50292), also as required by the terms of the Settlement Agreement. A final rule implementing a regulatory amendment to correct minor oversights in the August 1, 2002, interim final rule, was published on January 28, 2003 (68 FR 4113), and another minor correction to the August 1, 2002, interim final rule was published March 25, 2003 (68 FR

14347). Descriptions of the measures implemented through the interim rules can be found in the preamble to those rules and are not repeated here.

The Order specified that management measures implemented by the August 1, 2002, interim final rule remain in effect until the completion of Amendment 13, which was initially scheduled to be in effect no later than August 22, 2003. However, due to the need for additional time to address concerns related to NMFS' Northeast Fisheries Science Center's trawl survey and new biological reference points developed for the NE multispecies stocks, NMFS and two of the plaintiffs filed a motion with the Court requesting an extension of the August 22, 2003, implementation schedule until May 1, 2004. On December 4, 2002, the Court granted an extension of the Court-ordered timeline for Amendment 13 implementation until May 1, 2004.

On January 22, 2003, NMFS published a Notice of Continuation of Regulations in the **Federal Register** to inform the public that NMFS was continuing the interim regulations for a second 180–day period, ending July 27, 2003. Under section 305(c)(3)(B) of the Magnuson-Stevens Act, interim regulations implemented under section 305(c) are limited to two consecutive 180–day periods. Because the Order required that the interim management measures remain in effect until Amendment 13 is implemented, and because the Court granted an extension of the original schedule for implementation of Amendment 13 to May 1, 2004, in response to unanticipated events, NMFS proposed, on April 24, 2003 (68 FR 20096), an emergency action under authority of section 305(c) of the Magnuson-Stevens Act. In addition to continuing the August 1, 2002, measures specified in the Settlement Agreement and Order, the April 24, 2003, emergency rule proposed a pilot program to allow limited access NE multispecies vessels to lease their NE multispecies DAS. The proposed emergency rule was corrected on May 9, 2003 (68 FR 24914) and notification of changes to that rule was published June 20, 2003 (68 FR 36970). Due to the newness and potential controversiality of the DAS Leasing Program, NMFS extended the comment period through June 10, 2003, on the DAS leasing aspect of the proposed emergency rule only (68 FR 28188; May 23, 2003). On June 27, 2003 (68 FR 38234), NMFS published a final emergency rule that implemented many of the same measures implemented through the August 1, 2002, interim final rule, with some modifications in response to public comment, but did not implement the DAS Leasing Program. Because of the public comments received and the controversial aspects of the DAS Leasing Program, NMFS concluded that it would be better to develop such a program through the Council process than through emergency rulemaking; thus, NMFS withdrew the proposed DAS Leasing Program (68 FR 41549, July 14, 2003). The measures implemented through the June 27, 2003, emergency rule remain in effect at this time. The emergency measures were continued in effect through publication of a notice of continuation in the **Federal Register** on December 22, 2003 (68 FR 71032).

A notice of availability of a Draft Environmental Impact Statement for the EFH components of Amendment 13 was published on April 4, 2003 (68 FR 16511), with public comment accepted through July 2, 2003. A notice of availability of the Draft Supplemental Environmental Impact Statement (DSEIS), which analyzed the impacts of all of the measures under consideration in Amendment 13, was published on August 29, 2003 (68 FR 52018), with public comments accepted through October 15, 2003. A correction to the DSEIS was published on September 19, 2002 (68 FR 54900).

Amendment 13 contains numerous measures to end overfishing and rebuild stocks. In accordance with the Settlement Agreement resulting from the legal challenge *American Oceans Campaign, et al.* v *Daley, et al.* (Civil Case Number 99–982 (GK)), Amendment 13 also evaluates the impacts of fishing on EFH through analysis in the FSEIS and includes management measures designed to minimize the adverse effects of fishing on EFH to the extent practicable. The major measures proposed in Amendment 13 are listed in the **SUMMARY**.

A proposed rule that would implement Amendment 13 will be published in the **Federal Register** for public comment, following NMFS' evaluation of the proposed rule under the procedures of the Magnuson-Stevens Act. Public comments on the proposed rule must be received by the end of the comment period on Amendment 13 to be considered in the approval/disapproval decision on the amendment. All comments received by February 27, 2004, whether specifically directed to Amendment 13 or the proposed rule, will be considered in the approval/disapproval decision on the amendment. Any comments on the proposed rule received after that date will not be considered in the decision to approve or disapprove Amendment 13.

Authority: 16 U.S.C. 1801 *et seq.*

Dated: December 22, 2003.

Bruce Morehead,

Acting Director, Office of Sustainable Fisheries, National Marine Fisheries Service.

[FR Doc. 03–31895 Filed 12–23–03; 9:12 am]

BILLING CODE 3510–22–S

Notices

Federal Register

Vol. 68, No. 248

Monday, December 29, 2003

This section of the FEDERAL REGISTER contains documents other than rules or proposed rules that are applicable to the public. Notices of hearings and investigations, committee meetings, agency decisions and rulings, delegations of authority, filing of petitions and applications and agency statements of organization and functions are examples of documents appearing in this section.

DEPARTMENT OF HEALTH AND HUMAN SERVICES

DEPARTMENT OF AGRICULTURE

Announcement of Meeting of 2005 Dietary Guidelines Advisory Committee, Invitation for Oral Testimony, and Solicitation of Written Comments

AGENCIES: U.S. Department of Health and Human Services (HHS), Office of Public Health and Science; and U.S. Department of Agriculture (USDA), Food, Nutrition and Consumer Services and Research, Education and Economics.

ACTION: Notice.

SUMMARY: The U.S. Department of Health and Human Services and the U.S. Department of Agriculture (a) provide notice of the second meeting of the Committee, (b) invite requests for oral testimony, and (c) solicit written comments.

DATES: (1) The Committee will meet on January 28 and 29, 2004, 8:30 a.m. to 5:30 p.m. on both days. (2) Requests to present oral testimony, to be presented in the afternoon of the first day, must be received by 5 p.m. E.S.T. on January 16, 2004. (3) Written comments on the guidelines must be received by 5 p.m. E.S.T. on January 16, 2004, to ensure transmittal to the Committee prior to this meeting.

ADDRESSES: Requests for oral testimony and written comments can be sent to dietaryguidelines@osophs.dhhs.gov or mailed to Kathryn McMurry, HHS Office of Disease Prevention and Health Promotion, Office of Public Health and Science, Room 738–G, 200 Independence Ave., SW., Washington, DC 20201.

FOR FURTHER INFORMATION CONTACT: HHS Co-Executive Secretaries: Kathryn McMurry or Karyl Thomas Rattay (phone 202–690–7102), HHS Office of Disease Prevention and Health Promotion, Office of Public Health and Science, Room 738–G, 200 Independence Ave., SW., Washington, DC 20201. USDA Co-Executive Secretaries: Carole Davis (phone 703–305–7600), USDA Center for Nutrition Policy and Promotion, 3101 Park Center Drive, Room 1034, Alexandria, Virginia 22302, or Pamela Pehrsson (phone 301–504–0716), USDA Agricultural Research Service, Beltsville Agricultural Research Center-West, Building 005, Room 309A, Beltsville, Maryland 20705. Additional information is available on the Internet at *http://www.health.gov/dietaryguidelines.*

SUPPLEMENTARY INFORMATION: *Dietary Guidelines Advisory Committee:* The thirteen-member Committee appointed by the two Departments is chaired by Janet King, Ph.D., R.D., Children's Hospital Oakland Research Institute, Oakland, California. Other members are Lawrence J. Appel, M.D., M.P.H., Johns Hopkins University School of Medicine, Baltimore, Maryland; Yvonne L. Bronner, Sc.D., R.D., L.D., Morgan State University, Baltimore, Maryland; Benjamin Caballero, M.D., Ph.D., Johns Hopkins University Bloomberg School of Public Health, Baltimore, Maryland; Carlos A. Camargo, M.D., Dr.P.H., Harvard University, Boston, Massachusetts; Fergus M. Clydesdale, Ph.D., University of Massachusetts, Amherst, Amherst, Massachusetts; Vay Liang W. Go, M.D., University of California at Los Angeles, Los Angeles, California; Penny M. Kris-Etherton, Ph.D., R.D., Pennsylvania State University, University Park, Pennsylvania; Joanne R. Lupton, Ph.D., Texas A&M University, College Station, Texas; Theresa A. Nicklas, Dr.P.H., M.P.H., L.N., Baylor College of Medicine, Houston, Texas; Russell R. Pate, Ph.D., University of South Carolina, Columbia, South Carolina; F. Xavier Pi-Sunyer, M.D., M.P.H., Columbia University College of Physicians and Surgeons, New York, New York; and Connie M. Weaver, Ph.D., Purdue University, West Lafayette, Indiana.

Purpose of Meeting: The appointment of the Committee reflects the commitment by the Departments of Health and Human Services and Agriculture to provide sound and current dietary guidance to consumers. The National Nutrition Monitoring and Related Research Act of 1990 (Pub. L. 101–445, Title III) requires the Secretaries of HHS and USDA to publish the *Dietary Guidelines for Americans* at least every five years. During its first meeting, the Dietary Guidelines Advisory Committee decided that the science has changed since the 2000 edition of *Nutrition and Your Health: Dietary Guidelines for Americans* and further evaluation of the science is necessary. Therefore, it will conduct a review of current scientific and medical knowledge and provide a technical report of any recommendations to the Secretaries for the year 2005 edition.

Announcement of Meeting: The Committee's second meeting will take place on January 28 and 29, 2004 from 8:30 a.m. to 5:30 p.m. The meeting will be held at the Hotel Washington, located on 15th St. and Pennsylvania Ave., NW., Washington, DC 20004, in the Ballroom on the lower lobby. The location is three blocks from the Metro Center metro station and about three blocks from the McPherson Square metro station. Parking is available at a local garage located on F Street, next to the hotel. The main entry to the building is located on 15th Street and a side entrance is available on the F Street side of the hotel. The agenda will include (a) presentations from invited experts, (b) oral testimony from pre-registered individuals or groups, (c) discussion of scientific reviews and related issues, and (d) formulation of plans for future work of the Committee.

Public Participation at Meeting: Space is limited for all sessions. The meeting is open to the public. Pre-registration is required. To pre-register, please email *dietaryguidelines@osophs.dhhs.gov,* with ''Meeting Registration'' in the subject line or call Marianne Augustine at (202) 260–2322 by 5 p.m. E.S.T., January 16, 2004. Registration must include your name, affiliation, phone number, and days attending. Visitors must bring proper identification to attend the meeting. If you require a sign language interpreter, please call Marianne Augustine at (202) 260–2322 by January 13, 2004. Documents pertaining to Committee deliberations will be available for public inspection and copying in Room 738–G, 200 Independence Avenue, SW., Washington, DC 20201 on the day before the meeting and following the meeting. Please call (202) 690–7102 to

schedule an appointment to view the documents.

Oral Testimony: By this notice, the Committee is inviting submission of applications for oral testimony from the public. Oral testimony will be held in the afternoon of January 28, 2004. Due to time limitations, pre-registration is required. Registration to present oral testimony will be confirmed on a first-come, first-serve basis, as time on the meeting agenda permits. Requests to testify must include a written outline of the intended testimony not exceeding one page in length. Requests can be submitted electronically with ''Oral Testimony Registration'' in the subject line, to *dietaryguidelines@osophs.dhhs.gov.* All requests must be received by 5 p.m. E.S.T., January 16, 2004. Presenters are required to disclose their affiliation and their source of funding to give oral testimony at the meeting and limit their comments to three minutes. More detailed, written comments may be submitted separately. Please call Marianne Augustine at (202) 260–2322 if you have questions.

Written Comment: By this notice, the Committee is soliciting submission of written comments, views, information and data pertinent to review of the *Dietary Guidelines for Americans.* For those submitting comments more than 5 pages in length, please provide a 1-page summary of key points related to the comments submitted for the Dietary Guidelines Advisory Committee. To ensure transmittal to the Committee prior to the second meeting, they must be submitted by 5 p.m. E.S.T. on Tuesday, January 16, 2004. Comments are welcome throughout the Committee's deliberations. Comments should be sent to *dietaryguidelines@osophs.dhhs.gov* or to Kathryn McMurry, HHS Office of Disease Prevention and Health Promotion, Office of Public Health and Science, Room 738–G, 200 Independence Avenue, SW., Washington, DC 20201.

Dated: December 17, 2003.

Carter Blakey,

Acting Director, Office of Disease Prevention and Health Promotion, U.S. Department of Health and Human Services.

Dated: December 19, 2003.

Eric J. Hentges,

Executive Director, Center for Nutrition Policy and Promotion, U.S. Department of Agriculture.

Dated: December 17, 2003.

Edward Knipling,

Acting Administrator, Agricultural Research Service, U.S. Department of Agriculture.

[FR Doc. 03–31801 Filed 12–24–03; 8:45 am]

BILLING CODE 4150–32–P

COMMITTEE FOR PURCHASE FROM PEOPLE WHO ARE BLIND OR SEVERELY DISABLED

Procurement List; Proposed Additions and Deletion

AGENCY: Committee for Purchase from People Who Are Blind or Severely Disabled.

ACTION: Proposed Additions to and Deletion from Procurement List.

SUMMARY: The Committee is proposing to add to the Procurement List services to be furnished by nonprofit agencies employing persons who are blind or have other severe disabilities, and to delete services previously furnished by such agencies.

Comments Must Be Received on or Before: January 29, 2004.

ADDRESSES: Committee for Purchase From People Who Are Blind or Severely Disabled, Jefferson Plaza 2, Suite 10800, 1421 Jefferson Davis Highway, Arlington, Virginia, 22202–3259.

FOR FURTHER INFORMATION CONTACT: Sheryl D. Kennerly, (703) 603–7740.

SUPPLEMENTARY INFORMATION: This notice is published pursuant to 41 U.S.C 47(a) (2) and 41 CFR 51–2.3. Its purpose is to provide interested persons an opportunity to submit comments on the proposed actions.

Additions

If the Committee approves the proposed additions, the entities of the Federal Government identified in this notice for each product or service will be required to procure the services listed below from nonprofit agencies employing persons who are blind or have other severe disabilities.

Regulatory Flexibility Act Certification

I certify that the following action will not have a significant impact on a substantial number of small entities. The major factors considered for this certification were:

1. If approved, the action will not result in any additional reporting, recordkeeping or other compliance requirements for small entities other than the small organizations that will furnish the services to the Government.

2. If approved, the action will result in authorizing small entities to furnish the services to the Government.

3. There are no known regulatory alternatives which would accomplish the objectives of the Javits-Wagner-O'Day Act (41 U.S.C. 46–48c) in connection with the services proposed for addition to the Procurement List. Comments on this certification are invited.

Commenters should identify the statement(s) underlying the certification on which they are providing additional information.

End of Certification

The following services are proposed for addition to Procurement List for production by the nonprofit agencies listed:

Services

Service Type/Location: Administrative Service, National Park Service, 12795 W. Alameda Parkway, Lakewood, Colorado.

NPA: Bayaud Industries, Inc., Denver, Colorado.

Contract Activity: National Park Service, Lakewood, Colorado.

Service Type/Location: Custodial Services, VA Medical Center, Washington, DC.

NPA: Opportunities, Inc., Alexandria, Virginia.

Contract Activity: Department of Veterans Affairs, Washington, DC.

Deletions

Regulatory Flexibility Act Certification

I certify that the following action will not have a significant impact on a substantial number of small entities. The major factors considered for this certification were:

1. If approved, the action may result in additional reporting, recordkeeping or other compliance requirements for small entities.

2. If approved, the action may result in authorizing small entities to furnish the service to the Government.

3. There are no known regulatory alternatives which would accomplish the objectives of the Javits-Wagner-O'Day Act (41 U.S.C. 46–48c) in connection with the service proposed for deletion from the Procurement List.

End of Certification

The following service is proposed for deletion from the Procurement List:

Service

Service Type/Location: Document Processing, Defense Reutilization and Marketing Office, McClellan AFB, California.

NPA: PRIDE Industries, Roseville, California.

Contract Activity: Department of the Air Force, McClellan AFB, California.

Patrick Rowe,

Deputy Executive Director.

[FR Doc. 03–31909 Filed 12–24–03; 8:45 am]

BILLING CODE 6353–01–P

DEPARTMENT OF COMMERCE

National Oceanic and Atmospheric Administration

[I.D. 122203C]

Proposed Information Collection; Comment Request; South Pacific Tuna Act

AGENCY: National Oceanic and Atmospheric Administration (NOAA).

ACTION: Notice.

SUMMARY: The Department of Commerce, as part of its continuing effort to reduce paperwork and respondent burden, invites the general public and other Federal agencies to take this opportunity to comment on proposed and/or continuing information collections, as required by the Paperwork Reduction Act of 1995, Public Law 104–13 (44 U.S.C. 3506(c)(2)(A)).

DATES: Written comments must be submitted on or before February 27, 2004

ADDRESSES: Direct all written comments to Diana Hynek, Departmental Paperwork Clearance Officer, Department of Commerce, Room 6625, 14th and Constitution Avenue, NW, Washington, DC 20230 (or via the Internet at *dHynek@doc.gov*).

FOR FURTHER INFORMATION CONTACT: Requests for additional information or copies of the information collection instrument and instructions should be directed to Raymond Clarke at 808–973–2935, ext. 205, or at Raymond.Clarke@noaa.gov.

SUPPLEMENTARY INFORMATION:

I. Abstract

The Treaty on Fisheries Between the Governments of Certain Pacific Island States and the Government of the United States, signed in Port Moresby, Papua New Guinea, in 1987, and its annexes, schedules and implementing agreements, as amended (Treaty), authorize U.S. tuna vessels to fish within fishing zones of a large region of the Pacific Ocean. The South Pacific Tuna Act (16 U.S.C. 973g and 973f) and U.S. implementing regulations (50 CFR282.3 and 282.5), authorize the collection of information from participants in the Treaty fishery. Vessel operators who wish to participate in the Treaty fishery must submit annual license and registration applications and periodic written reports of catch and unloading of fish from a licensed vessel. The information collected is submitted to the Forum Fisheries Agency (FFA), on forms generated by the FFA, through the U.S. government (National Marine Fisheries Service). License and registration application information is used by FFA to determine the operational capability and financial responsibility of a vessel operator interested in participating in the Treaty fishery. The information obtained from vessel catch and unloading reports is used by FFA to assess fishing effort and fishery resources in the region and to track the amount of fish caught within each Pacific island state's exclusive economic zone for fair disbursement of Treaty monies. If the information is not collected, the U.S. government will not meet its obligations under the Treaty, and the lack of fishing information will result in poor management of the fishery resources.

II. Method of Collection

The information is collected using forms required under the Treaty.

III. Data

OMB Number: 0648–0218.

Form Number: None.

Type of Review: Regular submission.

Affected Public: Business or other for-profit organizations.

Estimated Number of Respondents: 32.

Estimated Time Per Response: 15 minutes for a license application form; 30 minutes for a registration application form; 15 minutes for a Vessel Monitoring System (VMS) application form; 1 hour for a catch report; 30 minutes for an unloading logsheet; 4 hours to install a VMS; 2 hours per year to maintain a VMS; and 24 seconds per day for automated VMS position messages.

Estimated Total Annual Burden Hours: 430.

Estimated Total Annual Cost to Public: $53,000.

IV. Request for Comments

Comments are invited on: (a) whether the proposed collection of information is necessary for the proper performance of the functions of the agency, including whether the information shall have practical utility; (b) the accuracy of the agency's estimate of the burden (including hours and cost) of the proposed collection of information; (c) ways to enhance the quality, utility, and clarity of the information to be collected; and (d) ways to minimize the burden of the collection of information on respondents, including through the use of automated collection techniques or other forms of information technology.

Comments submitted in response to this notice will be summarized and/or included in the request for OMB approval of this information collection; they also will become a matter of public record.

Dated: December 19, 2003.

Gwellnar Banks,

Management Analyst, Office of the Chief Information Officer.

[FR Doc. 03–31896 Filed 12–24–03; 8:45 am]

BILLING CODE 3510–22–S

DEPARTMENT OF COMMERCE

National Oceanic and Atmospheric Administration

[I.D. 122203B]

Proposed Information Collection; Comment Request; Vessel Monitoring System Requirements in the Western Pacific Pelagic Longline Fishery

AGENCY: National Oceanic and Atmospheric Administration (NOAA).

ACTION: Notice.

SUMMARY: The Department of Commerce, as part of its continuing effort to reduce paperwork and respondent burden, invites the general public and other Federal agencies to take this opportunity to comment on proposed and/or continuing information collections, as required by the Paperwork Reduction Act of 1995, Public Law 104–13 (44 U.S.C. 3506(c)(2)(A)).

DATES: Written comments must be submitted on or before February 27, 2004.

ADDRESSES: Direct all written comments to Diana Hynek, Departmental Paperwork Clearance Officer, Department of Commerce, Room 6625, 14th and Constitution Avenue, NW, Washington, DC 20230 (or via the Internet at *dHynek@doc.gov*).

FOR FURTHER INFORMATION CONTACT: Requests for additional information or copies of the information collection instrument and instructions should be directed to Alvin Katekaru at 803–973–2935, ext. 207, or at Alvin.Katekaru@noaa.gov.

SUPPLEMENTARY INFORMATION:

I. Abstract

Commercial fishing vessels active in the Hawaii-based pelagic longline fishery must allow NOAA to install vessel monitoring system (VMS) units on their vessel when directed to do so by NOAA enforcement personnel. The VMS units automatically send periodic reports on the position of the vessel. NOAA uses the reports to monitor the vessel's location and activities while enforcing area closures. NOAA pays for the units and messaging.

II. Method of Collection

The only information collected is vessel position reports, which are automatically transmitted via the VMS.

III. Data

OMB Number: 0648–0441.
Form Number: None.
Type of Review: Regular submission.
Affected Public: Business or other for-profit organizations.
Estimated Number of Respondents: 164.
Estimated Time Per Response: 4 hours to install a VMS unit; 2 hours per year to repair and maintain a VMS unit; and 24 seconds a day to transmit hourly automated position reports from a vessel.
Estimated Total Annual Burden Hours: 743.
Estimated Total Annual Cost to Public: $0.

IV. Request for Comments

Comments are invited on: (a) whether the proposed collection of information is necessary for the proper performance of the functions of the agency, including whether the information shall have practical utility; (b) the accuracy of the agency's estimate of the burden (including hours and cost) of the proposed collection of information; (c) ways to enhance the quality, utility, and clarity of the information to be collected; and (d) ways to minimize the burden of the collection of information on respondents, including through the use of automated collection techniques or other forms of information technology.

Comments submitted in response to this notice will be summarized and/or included in the request for OMB approval of this information collection; they also will become a matter of public record.

Dated: December 19, 2003.

Gwellnar Banks,

Management Analyst, Office of the Chief Information Officer.

[FR Doc. 03–31897 Filed 12–24–03; 8:45 am]

BILLING CODE 3510–22–S

COMMITTEE FOR THE IMPLEMENTATION OF TEXTILE AGREEMENTS

Announcement of Request for Bilateral Textile Consultations with the Government of the People's Republic of China and the Establishment of an Import Limit for Knit Fabric, Category 222, Produced or Manufactured in the People's Republic of China

December 23, 2003.

AGENCY: Committee for the Implementation of Textile Agreements (Committee).

ACTION: Notice

EFFECTIVE DATE: December 24, 2003.

FOR FURTHER INFORMATION CONTACT: Roy Unger, International Trade Specialist, Office of Textiles and Apparel, U.S. Department of Commerce, (202) 482-4212. For information on the quota status of these limits, refer to the Quota Status Reports posted on the bulletin boards of each Customs port, call (202) 927-5850, or refer to the Bureau of Customs and Border Protection website at http://www.customs.gov. For information on embargoes and quota re-openings, refer to the Office of Textiles and Apparel website at http://otexa.ita.doc.gov.

SUPPLEMENTARY INFORMATION:

Authority: Section 204 of the Agricultural Act of 1956, as amended (7 U.S.C. 1854); Executive Order 11651 of March 3, 1972, as amended.

On December 24, 2003, as provided for under paragraph 242 of the Report of the Working Party on the Accession of China to the World Trade Organization (Accession Agreement), the United States requested consultations with the Government of the People's Republic of China with respect to imports of Chinese origin knit fabric in Category 222. In accordance with paragraph 242 of the Accession Agreement and the procedures set forth by the Committee on May 21, 2003 (68 FR 27787), as clarified on August 18, 2003 (68 FR 49440), the United States is establishing a twelve-month limit on knit fabric in Category 222 from China, beginning on December 24, 2003, and extending through December 23, 2004 at a level of 9,664,477 kilograms.

Paragraph 2.B. of the U.S.-China Textile Visa Arrangement provides that if additional categories become subject to import quotas, those categories shall be automatically included in the coverage of the Visa Arrangement. This Visa Arrangement was notified to the World Trade Organization Textiles Monitoring Body as an agreed administrative arrangement on May 21, 2002. Consequently, the United States will require that shipments of Chinese origin knit fabric in Category 222 be accompanied by an export visa and Electronic Visa Information System (ELVIS) transmission issued by the Government of the People's Republic of China. In order to provide a period for adjustment, the United States will allow shipments of goods in this category that are not accompanied by an export visa and an ELVIS transmission to enter the United States if exported prior to January 23, 2004. However, shipments exported from China on or after January 23, 2004 must be accompanied by an export visa and ELVIS transmission issued by the Government of the People's Republic of China, and shipments without an export visa and ELVIS transmission will be denied entry.

Paragraph 242 of the Accession Agreement allows World Trade Organization Members that believe imports of Chinese origin textile and apparel products are, due to market disruption, threatening to impede the orderly development of trade in these products to request consultations with the People's Republic of China with a view to easing or avoiding such market disruption. Upon receipt of the request, the People's Republic of China has agreed to hold its shipments to a level no greater than 7.5 percent (6 percent for wool product categories) above the amount entered during the first 12 months of the most recent 14 months preceding the request for consultations. The Member requesting consultations may implement such a limit. Consistent with paragraph 242, consultations with the People's Republic of China will be held within 30 days of receipt of the request for consultations, and every effort will be made to reach agreement on a mutually satisfactory solution within 90 days of receipt of the request for consultations. If agreement on a different limit is reached, the Committee will issue a **Federal Register** Notice containing a directive to the Bureau of Customs and Border Protection to implement the negotiated limit.

On July 24, 2003, the Committee received a request from the American

Yarn Spinners Association, American Manufacturing Trade Action Coalition, American Textile Manufacturers Institute and the National Textile Association alleging that imports from the People's Republic of China of knit fabric (Category 222) are, due to market disruption, threatening to impede the orderly development of trade in this product, and requesting that an Accession Agreement textile and apparel safeguard action be taken on imports of knit fabric. The Committee determined that this request provided the information necessary for the Committee to consider the request, and, on August 18, 2003, the Committee solicited public comments on the request (68 FR 49440). This public comment period ended on September 17, 2003. The Committee determined that imports of Chinese origin knit fabric are, due to market disruption and the threat of market disruption, threatening to impede the orderly development of trade in knit fabric, and that imports of knit fabric from China play a significant role in the existence and threat of market disruption. A summary statement of the reasons and justifications for the U.S. request for consultations concerning imports of Category 222 from the People's Republic of China follows this notice.

A description of the textile and apparel categories in terms of Harmonized Tariff Schedule of the United States numbers is available in the CORRELATION: Textile and Apparel Categories with the Harmonized Tariff Schedule of the United States (see **Federal Register** notice 68 FR 1599, published on January 13, 2003). Also see 67 FR 63891, published on October 16, 2002.

D. Michael Hutchinson,

Acting Chairman, Committee for the Implementation of Textile Agreements.

Committee for the Implementation of Textile Agreements

December 23, 2003.

Commissioner,
Bureau of Customs and Border Protection, Washington, DC 20229.

Dear Commissioner: Pursuant to Section 204 of the Agricultural Act of 1956, as amended (7 U.S.C. 1854); and Executive Order 11651 of March 3, 1972, as amended, you are directed to prohibit, effective on December 24, 2003, entry into the United States for consumption and withdrawal from warehouse for consumption of knit fabric textile products in Category 222, produced or manufactured in the People's Republic of China and exported during the twelve-month period beginning on December 24, 2003, and extending through December 23, 2004, in excess of 9,664,477 kilograms.

Paragraph 2.B. of the U.S.-China Textile Visa Arrangement provides that if additional categories become subject to import quotas, those categories shall be automatically included in the coverage of the Visa Arrangement. This Visa Arrangement was notified to the World Trade Organization Textiles Monitoring Body as an agreed administrative arrangement on May 21, 2002. Consequently, the United States will require that shipments of Chinese origin knit fabric in Category 222 be accompanied by an export visa and Electronic Visa Information System (ELVIS) transmission issued by the Government of the People's Republic of China. In order to provide a period for adjustment, the United States will allow shipments of goods in this category that are not accompanied by an export visa and an ELVIS transmission to enter the United States if exported prior to January 23, 2004. However, shipments exported from China on or after January 23, 2004 must be accompanied by an export visa and ELVIS transmission issued by the Government of the People's Republic of China, and shipments without an export visa and ELVIS transmission will be denied entry.

Products which have been exported to the United States prior to December 24, 2003, shall not be subject to the limit established in this directive.

In carrying out the above directions, the Commissioner should construe entry into the United States for consumption to include entry for consumption into the Commonwealth of Puerto Rico.

The Committee for the Implementation of Textile Agreements has determined that this action falls within the foreign affairs exception of the rulemaking provisions of 5 U.S.C. 553(a)(1).

Sincerely,
D. Michael Hutchinson,
Acting Chairman, Committee for the Implementation of Textile Agreements.

SUMMARY OF THE REASONS AND JUSTIFICATIONS FOR U.S. REQUEST FOR CONSULTATIONS WITH CHINA PURSUANT TO PARAGRAPH 242 OF THE REPORT OF THE WORKING PARTY ON THE ACCESSION OF CHINA TO THE WORLD TRADE ORGANIZATION

Knit Fabric
Category 222

The United States believes that imports of Chinese origin knit fabric are, due to market disruption, threatening to impede the orderly development of trade in knit fabric, and that imports of knit fabric from China play a significant role in the existence of market disruption. Further, the United States believes that imports of Chinese origin knit fabric are, due to the threat of market disruption, threatening to impede the orderly development of trade in knit fabric, and that imports of knit fabric from China play a significant role in the threat of market disruption. Either finding supports a request for consultations with the Government of the People's Republic of China under Paragraph 242 of the Report of the Working Party on the Accession of China to the World Trade Organization (''Paragraph 242''). The following facts, and others contained in the full Statement, support these beliefs:

U.S. Imports from China Are Increasing Rapidly in Absolute Terms. U.S. imports of knit fabric from China increased from 42,505 kilograms in 2000 to over 7 million kilograms in 2002 (an increase of 16,396 percent) and to 9.1 million kilograms in the year ending in October 2003 (an increase of 21,307 percent from the 2000 level).

U.S. Imports from China Are Increasing Rapidly Relative to Other Imports. In 2001, China was the 30th largest exporter of knit fabric to the United States. Just one year later, China was the 5th largest exporter. In the year ending October 2003, China surpassed Mexico, becoming the 4th largest exporter of knit fabric to the United States.

Chinese Average Unit Values Are Well Below Values from Other Countries. In the year ending October 2003, the average unit value of knit fabric imports from China was US$5.26 per kilogram, compared to a ''rest of world'' average unit import value of US$6.46 per kilogram.

U.S. Imports from China Are Likely to Increase Further in the Near Future. China is the world's largest textile machinery importing country. Between January and May 2003, China imported $1.8 billion worth of textile machinery, an increase of 71 percent compared to the same period last year. According to Chinese Customs data, China imported over US$243 million of knitting machines in the first five months of 2003 - an increase of over 105.4 percent over the same period in 2002.

The U.S. Knit Fabric Industry Is Vulnerable to Any Increase in Imports. U.S. production of knit fabric fell 27 percent from 2000 to 2002 (from 657,040 kilograms to 479,960 kilograms), while the share of the market held by U.S. producers fell by 9.6 percentage points (from 86.9 percent to 77.3 percent) during this period.

[FR Doc. 03–32031 Filed 12–24–03; 8:45 am]
BILLING CODE 3510–DR–S

COMMITTEE FOR THE IMPLEMENTATION OF TEXTILE AGREEMENTS

Announcement of Request for Bilateral Textile Consultations with the Government of the People's Republic of China and the Establishment of an Import Limit for Brassieres and Other Body Supporting Garments, Category 349/649, Produced or Manufactured in the People's Republic of China

December 23, 2003.

AGENCY: Committee for the Implementation of Textile Agreements (Committee).

ACTION: Notice

EFFECTIVE DATE: December 24, 2003.

FOR FURTHER INFORMATION CONTACT: Roy Unger, International Trade Specialist, Office of Textiles and Apparel, U.S. Department of Commerce, (202) 482-4212. For information on the quota

status of these limits, refer to the Quota Status Reports posted on the bulletin boards of each Customs port, call (202) 927-5850, or refer to the Bureau of Customs and Border Protection website at http://www.customs.gov. For information on embargoes and quota re-openings, refer to the Office of Textiles and Apparel website at http://otexa.ita.doc.gov.

SUPPLEMENTARY INFORMATION:

Authority: Section 204 of the Agricultural Act of 1956, as amended (7 U.S.C. 1854); Executive Order 11651 of March 3, 1972, as amended.

On December 24, 2003, as provided for under paragraph 242 of the Report of the Working Party on the Accession of China to the World Trade Organization (Accession Agreement), the United States requested consultations with the Government of the People's Republic of China with respect to imports of Chinese origin brassieres and other body supporting garments in Category 349/649. In accordance with paragraph 242 of the Accession Agreement and the procedures set forth by the Committee on May 21, 2003 (68 FR 27787), as clarified on August 18, 2003 (68 FR 49440), the United States is establishing a twelve-month limit on brassieres and other body supporting garments in Category 349/649 from China, beginning on December 24, 2003, and extending through December 23, 2004 at a level of 16,828,971 dozen.

Paragraph 2.B. of the U.S.-China Textile Visa Arrangement provides that if additional categories become subject to import quotas, those categories shall be automatically included in the coverage of the Visa Arrangement. This Visa Arrangement was notified to the World Trade Organization Textiles Monitoring Body as an agreed administrative arrangement on May 21, 2002. Consequently, the United States will require that shipments of Chinese origin brassieres and other body supporting garments in Category 349/649 be accompanied by an export visa and Electronic Visa Information System (ELVIS) transmission issued by the Government of the People's Republic of China. In order to provide a period for adjustment, the United States will allow shipments of goods in this category that are not accompanied by an export visa and an ELVIS transmission to enter the United States if exported prior to January 23, 2004. However, shipments exported from China on or after January 23, 2004 must be accompanied by an export visa and ELVIS transmission issued by the Government of the People's Republic of China, and shipments without an export visa and ELVIS transmission will be denied entry.

Paragraph 242 of the Accession Agreement allows World Trade Organization Members that believe imports of Chinese origin textile and apparel products are, due to market disruption, threatening to impede the orderly development of trade in these products to request consultations with the People's Republic of China with a view to easing or avoiding such market disruption. Upon receipt of the request, the People's Republic of China has agreed to hold its shipments to a level no greater than 7.5 percent (6 percent for wool product categories) above the amount entered during the first 12 months of the most recent 14 months preceding the request for consultations. The Member requesting consultations may implement such a limit. Consistent with paragraph 242, consultations with the People's Republic of China will be held within 30 days of receipt of the request for consultations, and every effort will be made to reach agreement on a mutually satisfactory solution within 90 days of receipt of the request for consultations. If agreement on a different limit is reached, the Committee will issue a **Federal Register** Notice containing a directive to the Bureau of Customs and Border Protection to implement the negotiated limit.

On July 24, 2003, the Committee received a request from the American Manufacturing Trade Action Coalition, American Textile Manufacturers Institute and the National Textile Association alleging that imports from the People's Republic of China of brassieres and other body supporting garments (Category 349/649) are, due to market disruption, threatening to impede the orderly development of trade in this product, and requesting that an Accession Agreement textile and apparel safeguard action be taken on imports of brassieres and other body supporting garments. The Committee determined that this request provided the information necessary for the Committee to consider the request, and, on August 18, 2003, the Committee solicited public comments on the request (68 FR 49448). This public comment period ended on September 17, 2003. The Committee determined that imports of Chinese origin brassieres and other body supporting garments are, due to market disruption and the threat of market disruption, threatening to impede the orderly development of trade in brassieres and other body supporting garments, and that imports of brassieres and other body supporting garments from China play a significant role in the existence of and threat of market disruption. A summary statement of the reasons and justifications for the U.S. request for consultations concerning imports of Category 349/649 from the People's Republic of China follows this notice.

A description of the textile and apparel categories in terms of Harmonized Tariff Schedule of the United States numbers is available in the CORRELATION: Textile and Apparel Category with the Harmonized Tariff Schedule of the United States (see **Federal Register** notice 68 FR 1599, published on January 13, 2003). Also see 67 FR 63891, published on October 16, 2002.

D. Michael Hutchinson,

Acting Chairman, Committee for the Implementation of Textile Agreements.

Committee for the Implementation of Textile Agreements

December 23, 2003.

Commissioner,
Bureau of Customs and Border Protection, Washington, DC 20229.

Dear Commissioner: Pursuant to Section 204 of the Agricultural Act of 1956, as amended (7 U.S.C. 1854); and Executive Order 11651 of March 3, 1972, as amended, you are directed to prohibit, effective on December 24, 2003, entry into the United States for consumption and withdrawal from warehouse for consumption of brassieres and other body supporting garments in Category 349/649, produced or manufactured in the People's Republic of China and exported during the twelve-month period beginning on December 24, 2003, and extending through December 23, 2004, in excess of 16,828,971 dozen.

Paragraph 2.B. of the U.S.-China Textile Visa Arrangement provides that if additional categories become subject to import quotas, those categories shall be automatically included in the coverage of the Visa Arrangement. This Visa Arrangement was notified to the World Trade Organization Textiles Monitoring Body as an agreed administrative arrangement on May 21, 2002. Consequently, the United States will require that shipments of Chinese origin brassieres and other body supporting garments in Category 349/649 be accompanied by an export visa and Electronic Visa Information System (ELVIS) transmission issued by the Government of the People's Republic of China. In order to provide a period for adjustment, the United States will allow shipments of goods in this category that are not accompanied by an export visa and an ELVIS transmission to enter the United States if exported prior to January 23, 2004. However, shipments exported from China on or after January 23, 2004 must be accompanied by an export visa and ELVIS transmission issued by the Government of the People's Republic of China, and shipments without an export visa and ELVIS transmission will be denied entry.

Products which have been exported to the United States prior to December 24, 2003,

shall not be subject to the limit established in this directive.

In carrying out the above directions, the Commissioner should construe entry into the United States for consumption to include entry for consumption into the Commonwealth of Puerto Rico.

The Committee for the Implementation of Textile Agreements has determined that this action falls within the foreign affairs exception of the rulemaking provisions of 5 U.S.C. 553(a)(1).

Sincerely,

D. Michael Hutchinson,

Acting Chairman, Committee for the Implementation of Textile Agreements.

SUMMARY OF THE REASONS AND JUSTIFICATIONS FOR U.S. REQUEST FOR CONSULTATIONS WITH CHINA PURSUANT TO PARAGRAPH 242 OF THE REPORT OF THE WORKING PARTY ON THE ACCESSION OF CHINA TO THE WORLD TRADE ORGANIZATION

Brassieres and Other Body Supporting Garments

Category 349/649

The United States believes that imports of Chinese origin brassieres and other body supporting garments are, due to market disruption, threatening to impede the orderly development of trade in brassieres and other body supporting garments, and that imports of brassieres and other body supporting garments from China play a significant role in the existence of market disruption. Further, the United States believes that imports of Chinese origin brassieres and other body supporting garments are, due to the threat of market disruption, threatening to impede the orderly development of trade in brassieres and other body supporting garments, and that imports of brassieres and other body supporting garments from China play a significant role in the threat of market disruption. Either finding supports a request for consultations with the Government of the People's Republic of China under Paragraph 242 of the Report of the Working Party on the Accession of China to the World Trade Organization (''Paragraph 242''). The following facts, and others contained in the full Statement, support these beliefs:

U.S. Imports from China Are Increasing Rapidly in Absolute Terms. U.S. imports of brassieres and other body supporting garments from China increased from 4,084,363 dozens in 2000 to 10,580,029 dozens in 2002 (an increase of 159 percent), and to 15,967,519 dozens in the year ending October 2003 (an increase of 291 percent from the 2000 level).

U.S. Imports from China Are Increasing Rapidly Relative to Other Imports. In 2001, China was the 6th largest exporter of brassieres and other body supporting garments to the United States. Just one year later, China was the largest exporter of brassieres and other body supporting garments to the United States and has remained so through the year ending October 2003.

Chinese Average Unit Values Are Well Below Values from Other Countries. In 2002, the average unit value of U.S. brassieres and other body supporting garments imports from China was US$33.43 per dozen, compared to a ''rest of world'' import average unit value of US$42.24 per dozen. In the year ending October 2003, the average unit value of imports from China fell to US$32.08 per dozen, compared to US$43.17 per dozen for ''rest of world'' imports.

U.S. Imports from China Are Likely to Increase Further in the Near Future. China's capacity to produce apparel, including brassieres and other body supporting garments, and the low prices of China imports of these products threaten to disrupt the U.S. market for brassieres and other body supporting garments. Due to the vulnerability of the U.S. industry today, even a relatively small increase in low-priced imports from China in the near future could have a considerable impact.

The U.S. Brassieres and Other Body Supporting Garments Industry Is Vulnerable to Any Increase in Imports. U.S. production including outward processing of brassieres and other body supporting garments fell 2 percent from 2000 to the year ending June 2003 (from 28,375 thousand dozen to 27,781 thousand dozen), while the share of the market held by U.S. producers fell by 9 percentage points (from 52.8 percent to 43.8 percent) during this period.

[FR Doc. 03–32032 Filed 12–24–03; 8:45 am]

BILLING CODE 3510–DR–S

COMMITTEE FOR THE IMPLEMENTATION OF TEXTILE AGREEMENTS

Announcement of Request for Bilateral Textile Consultations with the Government of the People's Republic of China and the Establishment of an Import Limit for Cotton and Man-Made Fiber Dressing Gowns and Robes, Category 350/650, Produced or Manufactured in the People's Republic of China

December 23, 2003.

AGENCY: Committee for the Implementation of Textile Agreements (Committee).

ACTION: Notice

EFFECTIVE DATE: December 24, 2003.

FOR FURTHER INFORMATION CONTACT: Roy Unger, International Trade Specialist, Office of Textiles and Apparel, U.S. Department of Commerce, (202) 482-4212. For information on the quota status of these limits, refer to the Quota Status Reports posted on the bulletin boards of each Customs port, call (202) 927-5850, or refer to the Bureau of Customs and Border Protection website at http://www.customs.gov. For information on embargoes and quota re-openings, refer to the Office of Textiles and Apparel website at http://otexa.ita.doc.gov.

SUPPLEMENTARY INFORMATION:

Authority: Section 204 of the Agricultural Act of 1956, as amended (7 U.S.C. 1854); Executive Order 11651 of March 3, 1972, as amended.

On December 24, 2003, as provided for under paragraph 242 of the Report of the Working Party on the Accession of China to the World Trade Organization (Accession Agreement), the United States requested consultations with the Government of the People's Republic of China with respect to imports of Chinese origin cotton and man-made fiber dressing gowns and robes in Category 350/650. In accordance with paragraph 242 of the Accession Agreement and the procedures set forth by the Committee on May 21, 2003 (68 FR 27787), as clarified on August 18, 2003 (68 FR 49440), the United States is establishing a twelve-month limit on cotton and man-made fiber dressing gowns in Category 350/650 from China, beginning on December 24, 2003, and extending through December 23, 2004 at a level of 4,094,382 dozen.

Paragraph 2.B. of the U.S.-China Textile Visa Arrangement provides that if additional categories become subject to import quotas, those categories shall be automatically included in the coverage of the Visa Arrangement. This Visa Arrangement was notified to the World Trade Organization Textiles Monitoring Body as an agreed administrative arrangement on May 21, 2002. Consequently, the United States will require that shipments of Chinese origin cotton and man-made fiber dressing gowns and robes in Category 350/650 be accompanied by an export visa and Electronic Visa Information System (ELVIS) transmission issued by the Government of the People's Republic of China. In order to provide a period for adjustment, the United States will allow shipments of goods in this category that are not accompanied by an export visa and an ELVIS transmission to enter the United States if exported prior to January 23, 2004. However, shipments exported from China on or after January 23, 2004 must be accompanied by an export visa and ELVIS transmission issued by the Government of the People's Republic of China, and shipments without an export visa and ELVIS transmission will be denied entry.

Paragraph 242 of the Accession Agreement allows World Trade Organization Members that believe imports of Chinese origin textile and apparel products are, due to market disruption, threatening to impede the orderly development of trade in these products to request consultations with the People's Republic of China with a view to easing or avoiding such market

disruption. Upon receipt of the request, the People's Republic of China has agreed to hold its shipments to a level no greater than 7.5 percent (6 percent for wool product categories) above the amount entered during the first 12 months of the most recent 14 months preceding the request for consultations. The Member requesting consultations may implement such a limit. Consistent with paragraph 242, consultations with the People's Republic of China will be held within 30 days of receipt of the request for consultations, and every effort will be made to reach agreement on a mutually satisfactory solution within 90 days of receipt of the request for consultations. If agreement on a different limit is reached, the Committee will issue a **Federal Register** Notice containing a directive to the Bureau of Customs and Border Protection to implement the negotiated limit.

On July 24, 2003, the Committee received a request from the American Manufacturing Trade Action Coalition, American Textile Manufacturers Institute and the National Textile Association alleging that imports from the People's Republic of China of cotton and man-made fiber dressing gowns and robes. (Category 350/650) are, due to market disruption, threatening to impede the orderly development of trade in this product, and requesting that an Accession Agreement textile and apparel safeguard action be taken on imports of cotton and man-made fiber dressing gowns and robes. The Committee determined that this request provided the information necessary for the Committee to consider the request, and, on August 18, 2003, the Committee solicited public comments on the request (68 FR 49444). This public comment period ended on September 17, 2003. The Committee determined that imports of Chinese origin cotton and man-made fiber dressing gowns and robes are, due to market disruption and the threat of market disruption, threatening to impede the orderly development of trade in cotton and man-made fiber dressing gowns and robes, and that imports of cotton and man-made fiber dressing gowns and robes from China play a significant role in the existence and threat of market disruption. A summary statement of the reasons and justifications for the U.S. request for consultations concerning imports of Category 350/650 from the People's Republic of China follows this notice.

A description of the textile and apparel categories in terms of Harmonized Tariff Schedule of the United States numbers is available in the CORRELATION: Textile and Apparel Categories with the Harmonized Tariff Schedule of the United States (see **Federal Register** notice 68 FR 1599, published on January 13, 2003). Also see 67 FR 63891, published on October 16, 2002.

D. Michael Hutchinson,

Acting Chairman, Committee for the Implementation of Textile Agreements.

Committee for the Implementation of Textile Agreements

December 23, 2003.

Commissioner,
Bureau of Customs and Border Protection, Washington, DC 20229.

Dear Commissioner: Pursuant to Section 204 of the Agricultural Act of 1956, as amended (7 U.S.C. 1854); and Executive Order 11651 of March 3, 1972, as amended, you are directed to prohibit, effective on December 24, 2003, entry into the United States for consumption and withdrawal from warehouse for consumption of cotton and man-made fiber dressing gowns and robes. in Category 350/650, produced or manufactured in the People's Republic of China and exported during the twelve-month period beginning on December 24, 2003, and extending through December 23, 2004, in excess of 4,094,382 dozen.

Paragraph 2.B. of the U.S.-China Textile Visa Arrangement provides that if additional categories become subject to import quotas, those categories shall be automatically included in the coverage of the Visa Arrangement. This Visa Arrangement was notified to the World Trade Organization Textiles Monitoring Body as an agreed administrative arrangement on May 21, 2002. Consequently, the United States will require that shipments of Chinese origin cotton and man-made fiber dressing gowns and robes in Category 350/650 be accompanied by an export visa and Electronic Visa Information System (ELVIS) transmission issued by the Government of the People's Republic of China. In order to provide a period for adjustment, the United States will allow shipments of goods in this category that are not accompanied by an export visa and an ELVIS transmission to enter the United States if exported prior to January 23, 2004. However, shipments exported from China on or after January 23, 2004 must be accompanied by an export visa and ELVIS transmission issued by the Government of the People's Republic of China, and shipments without an export visa and ELVIS transmission will be denied entry.

Products which have been exported to the United States prior to December 24, 2003, shall not be subject to the limit established in this directive.

In carrying out the above directions, the Commissioner should construe entry into the United States for consumption to include entry for consumption into the Commonwealth of Puerto Rico.

The Committee for the Implementation of Textile Agreements has determined that this action falls within the foreign affairs exception of the rulemaking provisions of 5 U.S.C. 553(a)(1).

Sincerely,
D. Michael Hutchinson,
Acting Chairman, Committee for the Implementation of Textile Agreements.

SUMMARY OF THE REASONS AND JUSTIFICATIONS FOR U.S. REQUEST FOR CONSULTATIONS WITH CHINA PURSUANT TO PARAGRAPH 242 OF THE REPORT OF THE WORKING PARTY ON THE ACCESSION OF CHINA TO THE WORLD TRADE ORGANIZATION

Cotton and Man-Made Fiber Dressing Gowns and Robes
Category 350/650

The United States believes that imports of Chinese origin cotton and man-made fiber dressing gowns and robes are, due to market disruption, threatening to impede the orderly development of trade in cotton and man-made fiber dressing gowns and robes, and that imports of cotton and man-made fiber dressing gowns and robes from China play a significant role in the existence of market disruption. Further, the United States believes that imports of Chinese origin cotton and man-made fiber dressing gowns and robes are, due to the threat of market disruption, threatening to impede the orderly development of trade in cotton and man-made fiber dressing gowns and robes, and that imports of cotton and man-made fiber dressing gowns and robes from China play a significant role in the threat of market disruption. Either finding supports a request for consultations with the Government of the People's Republic of China under Paragraph 242 of the Report of the Working Party on the Accession of China to the World Trade Organization (''Paragraph 242''). The following facts, and others contained in the full Statement, support these beliefs:

U.S. Imports from China Are Increasing Rapidly in Absolute Terms. U.S. imports of cotton and man-made fiber dressing gowns and robes from China increased from 259,868 dozens in 2000 to 2,171,896 dozens in 2002 (an increase of 736 percent), and to 4,117,377 dozens in the year ending in October 2003 (an increase of 1,484 percent from the 2000 level).

U.S. Imports from China Are Increasing Rapidly Relative to Other Imports. In 2001, China was the 5th largest exporter of cotton and man-made fiber dressing gowns and robes to the United States. Just one year later, China was the largest exporter of cotton and man-made fiber dressing gowns and robes and has remained so through the year ending October 2003.

Chinese Average Unit Values Are Well Below Values from Other Countries. In 2002, the average unit value of U.S. imports of cotton and man-made fiber dressing gowns and robes from China was US$66.61 per dozen, compared to a ''rest of world'' import average unit value of US$74.60 per dozen. In the year ending October 2003, the average unit value of imports from China fell to US$56.46 per dozen, compared to US$65.74 per dozen for ''rest of world'' imports.

U.S. Imports from China Are Likely to Increase Further in the Near Future. China's capacity to produce apparel, including cotton and man-made fiber dressing gowns and robes, and the low prices of Chinese imports

of these products threaten to disrupt the U.S. market for cotton and man-made fiber and dressing gowns and robes. Due to the vulnerability of the U.S. industry today, even a relatively small increase in low-priced imports from China in the near future could have a considerable impact.

The U.S. Cotton and Man-Made Fiber Dressing Gowns and Robes Industry is Vulnerable to Any Increase in Imports. U.S. production including outward processing of cotton and man-made fiber dressing gowns and robes fell 38.6 percent from 2000 to the year ending June 2003 (from 1,990 thousand dozens to 1,221 thousand dozens), while the share of the market held by U.S. producers fell by 17.9 percentage points (from 30 percent to 12.1 percent) during this period.

[FR Doc. 03–32033 Filed 12–24–03; 8:45 am]

BILLING CODE 3510–DR–S

DEPARTMENT OF DEFENSE

Office of the Secretary

Department of Defense Mandatory Declassification Review Addresses

AGENCY: Department of Defense

ACTION: Notice.

SUMMARY: Pursuant to the Information Security Oversight Office's Classified National Security Information Directive No. 1, this notice provides Department of Defense addresses to which Mandatory Declassification Review requests may be sent. This notice benefits the public in advising them where to send such requests for declassification review and makes administrative corrections that were previously published on November 17, 2003 (68 FR 64865).

FOR FURTHER INFORMATION CONTACT: Mr. Robert Storer, 703–601–4722

The following chart identifies the offices to which mandatory declassification review requests should be addressed

OSD/JS—Washington Headquarters Services, Chief, Declassification and Historical Research Branch, Suite 501, 1155 Jefferson Davis Highway, Arlington, VA 22202.

ARMY—Department of the Army, Army Declassification Activity, ATTN: TAPC–PDD, Suite 509, 4600 N. Fairfax Drive, Arlington, VA 22203–1553.

NAVY—Department of the Navy, Chief of Naval Operations, N09B11, RM 1D469, 2000 Navy Pentagon, Washington, DC 20350–2000.

AIR FORCE—Department of the Air Force, 11 CS/SCSR (MDR), 1000 Air Force Pentagon, Washington, DC 20330–1000.

MARINE—Commandant of the Marine Corps, U.S. Marine Corps, 2 Navy Annex, Room 1010, Washington, DC 20830–1775.

DARPA—Defense Advance Research, Project Agency, 3701 North Fairfax Dr., Arlington, VA 22203–1714.

DCAA—Director, Defense Contract Audit Agency, ATTN: CPS, 8725 John J. Kingman Rd., Ste. 2135, Ft. Belvoir, VA 22060–6219.

DIA—Defense Intelligence Agency, ATTN: D A N–1A, Rm E4–234, Washington, DC 20340–5100.

DISA—Defense Information Systems Agency, ATTN: Security Division, MPS 6, 5111 Leesburg Pike, Ste. 100, Falls Church, VA 22041.

DSS—Defense Security Service, Office of FOIA & Privacy, 1340 Braddock Place, Alexandria, VA 22314–1651.

DLA—Defense Logistics Agency, ATTN: DLA/DSS–S, 8725 John J. Kingman Rd., Ste. 2533, Ft. Belvoir, VA 22060–6221.

NIMA National Geospatial-Intelligence Agency, 4600 Sangamore Rd., Mail Stop D–10, Bethesda, Md. 20816–5000.

NSA National Security Agency, Information Policy Office, DC323 Room S2CW113, Suite 6884, Bldg SAB2, 9800 Savage Road, Ft. George G. Meade, MD, 20755–6248.

DTRA Defense Threat Reduction Agency, ATTN: SCR, 8725 John J. Kingman Rd, Ft. Belvoir, VA 22060–6201.

EUCOM U.S. European Command (HQ USEUCOM), Attn: ECJ1–AX (FOIA Officer), SMSgt Greg Outlaw, USAF, Unit 30400, APO, AE 09131.

SOUTHCOM U.S. Southern Command, Attn: Mr. Marco T. Villalobos, SCJ1–A (FOIA), 3511 NW 91st Avenue, Miami, FL 33172–1217.

SOCOM U.S. Special Operations Command, Attn: Kathryn Meeks, SOCS–SJS–SI (FOIA), 7701 Tampa Point Boulevard, MacDill AFB, FL 33621–5323.

CENTCOM U.S. Central Command, Attn: Jacqueline J. Scott, CCJ6–DM, 7115 South Boundary Blvd, MacDill AFB, FL 33621–5101.

NORTHCOM U.S. Northern Command, HQNORAD, USNORTHCOM/CSM, Attn: Lynn Bruns, 250 Vandenberg Street, Suite B016, Peterson Air Force Base, CO, 80914–3804.

JFCOM U.S. Joint Forces Command, Attn: Ms. Joyce Neidlinpa, Code J024, 1562 Mitscher Ave, Suite 200, Norfolk, VA 23511–2488.

PACOM U.S. Pacific Command, Attn: Maureen Jones, USPACOM FOIA Coordinator (J042), Administrative Support Division, Joint Secretariat, Box 28, Camp Smith, HI 96861–5025.

STRATCOM U.S. Strategic Command, 901 SAC Blvd, STE 1C15, Offutt AFB, NE 68113–6653.

TRANSCOM U.S. Transportation Command, Chief, Resources Information, Communications, and Records Management, Attn: TCJ6–RII, 508 Scott Drive, Bldg 1961, Scott AFB, IL 62225–5357.

Dated: December 18, 2003.

L.M. Bynum,

Alternate OSD Federal Register Liaison Officer, Department of Defense.

[FR Doc. 03–31793 Filed 12–24–03; 8:45 am]

BILLING CODE 5001–06–M

DEPARTMENT OF DEFENSE

Department of the Army; Corps of Engineers

Intent to Prepare a Joint Draft Environmental Impact Statement/Environmental Impact Report for the Wilson Creek/Oak Glen Creek Feasibility Study in the City of Yucaipa, San Bernardino County, CA

AGENCY: Department of the Army, U.S. Army Corps of Engineers, DoD.

ACTION: Notice of intent.

SUMMARY: The U.S. Army Corps of Engineers (Corps), Los Angeles District, in cooperation with the County of San Bernardino Flood Control District, will prepare a Draft Environmental Impact Statement/Environmental Impact Report (EIS/EIR) in support of the proposed Wilson Creek/Oak Glen Creek Feasibility Study for flood protection for City of Yucaipa, in San Bernardino County, California. The study will also investigate the feasibility of habitat restoration opportunities and preservation of watershed resources in balance with the need for economic development. The drainage from Wilson Creek/Oak Glen Creek creates a high volume of sediment and debris through the City of Yucaipa. This condition creates a threat of flood damage to existing residential and commercial development and infrastructure along these creeks. The EIS/EIR will address foreseeable environmental impacts, including beneficial effects, associated with alternative flood protection plans. The U.S. Army Corps of Engineers and the County of San Bernardino Flood Control District will cooperate in conducing this Feasibility Study. The U.S. Army Corps of Engineers is the lead Federal Agency for this study.

DATES: A public scoping meeting is scheduled at the City of Yucaipa Council Chambers, 34272 Yucaipa

Boulevard, Yucaipa, California 92399 from 6 pm to 9 pm on January 14, 2004.

Comments: Written comments concerning the Draft EIS/EIR should be submitted by February 12, 2004.

ADDRESSES: Submit comments to District Engineer, U.S. Army Corps of Engineers, Los Angeles District, ATTN: CESPL–PD–RL (L. Goodman), P.O. Box 532711, Los Angeles, CA 90053–2325.

FOR FURTHER INFORMATION CONTACT: Ms. Lois Goodman, Environmental Coordinator, telephone (213)–452–3869, or Mr. Robert Stuart, Study Manager, telephone (213)–452–3811. The cooperating entity, the County of San Bernardino Flood Control District, requests that inquiries be addressed to Mr. Jim Borcuk, at (909)–387–7962.

SUPPLEMENTARY INFORMATION: 1. Authorization. Congress has authorized the U.S. Army Corps of Engineers to conduct a Feasibility Study to investigate flood damage prevention and related opportunities along the Wilson Creek and Oak Glen Creek confluence area in Yucaipa, California, pursuant to House Resolution of the Committee on Public Works, dated May 8, 1964. Section 105 of the Water Resources Development Act of 1986 (Pub. L. 99–662, as amended) specifies the cost sharing requirements applicable to this study.

2. Background. The proposed study will investigate the feasibility of providing improved flood protection for the City of Yucaipa in San Bernardino County, California. The city of Yucaipa is located approximately 20 miles southeast of the city of San Bernardino. Wilson and Oak Glen Creeks originate in the San Bernardino Mountains and flow in a southerly direction through the city of Yucaipa, where they join.

Wilson Creek is an earth-bottomed channel from Yucaipa Boulevard, downstream to Interstate 10. A system of rail, cable, wire fencing, and corrugated steel protects the toe of the banks. The channel width averages about 50 feet, and the channel depth is about 10 feet. At Yucaipa Boulevard, the low bridge clearance severely restricts the channel depth. This constriction would likely divert major flood overflows to the southeast, away from the channel, where they could inundate a large portion of the developed area of Yucaipa before returning to the channel near the freeway. Based on Flood Insurance Rate Maps (FIRM), the 100-year floodplain is up to one half mile wide along one and one half miles of the north bank of Wilson Creek. The FIRM also indicates a significantly wide floodplain from 2nd street downstream top Oak Glen Boulevard, a distance of about two miles. Proposed new development along both sides of the creek may increase runoff in the near future. Overflows from Oak Glen Creek could inundate existing structures located along about one mile of the south overbank. The County of San Bernardino Flood Control District owns and operates a series of five large, interconnected, off-line water conservation basins along the south overbank of Wilson Creek, between Fremont Street and Bryant Street.

3. Proposed Action/Preliminary Alternatives. Two preliminary alternatives, in addition to the No Action alternative, were identified in the Reconnaissance Study. Preliminary Alternative 1 involves converting the off-line water conservation basins on the south overbank of Wilson Creek to flood detention basins. These basins appear to have the potential to contain substantial flood storage volume. Preliminary Alternative 2 involves deepening and widening sections of the channel in order to control the 100-year flood event, possibly in combination with additional detention basins upstream from the flooding problem. Subsequent to completion of the Reconnaissance Study, the City of Yucaipa developed a preliminary plan that includes a series of six interconnected in-stream detention basins at the confluence of Wilson Creek and Oak Glen Creek and immediately upstream on both Creeks. This preliminary plan also includes a nature trail and interpretive features.

4. Scoping Process. All interested Federal, State, County and local resource agencies, as well as Native American peoples, groups with environmental interests, and all interested individuals are encouraged to participate in the scoping process. Benefits of public involvement include: identification of pertinent environmental issues that need to be addressed; identification of issues that are not significant that may be eliminated from detailed study; contribution of useful information, such as published or unpublished data, direct personal experience, or knowledge which may support the decision-making process; assistance in defining the scope of appropriate plans and alternatives to be considered; and recommendations for suitable measures to mitigate potential adverse impacts of implementing plans or alternatives.

A public scoping meeting is scheduled on January 14, 2004 (*see* **DATES**). The purpose of the scoping meeting will be to gather information from the general public and interested organizations about issues and concerns that they would like to see addressed in the EIS/EIR. Comments may be delivered verbally at the meeting or sent in writing to the Los Angeles District. (*See* **DATES** and **ADDRESSES** above.)

5. Availability of the Draft EIS/EIR. The Draft EIS/EIR is expected to be available to the public for review and comment beginning in late 2005.

Dated: December 16, 2003.

Richard G. Thompson,

Colonel, US Army, District Engineer.

[FR Doc. 03–31894 Filed 12–24–03; 8:45 am]

BILLING CODE 3710–KF–M

DEPARTMENT OF EDUCATION

Notice of Proposed Information Collection Requests

AGENCY: Department of Education.

SUMMARY: The Leader, Regulatory Information Management Group, Office of the Chief Information Officer, invites comments on the proposed information collection requests as required by the Paperwork Reduction Act of 1995.

DATES: Interested persons are invited to submit comments on or before February 27, 2004.

SUPPLEMENTARY INFORMATION: Section 3506 of the Paperwork Reduction Act of 1995 (44 U.S.C. chapter 35) requires that the Office of Management and Budget (OMB) provide interested Federal agencies and the public an early opportunity to comment on information collection requests. OMB may amend or waive the requirement for public consultation to the extent that public participation in the approval process would defeat the purpose of the information collection, violate State or Federal law, or substantially interfere with any agency's ability to perform its statutory obligations. The Leader, Regulatory Information Management Group, Office of the Chief Information Officer, publishes that notice containing proposed information collection requests prior to submission of these requests to OMB. Each proposed information collection, grouped by office, contains the following: (1) Type of review requested, *e.g.* new, revision, extension, existing or reinstatement; (2) Title; (3) Summary of the collection; (4) Description of the need for, and proposed use of, the information; (5) Respondents and frequency of collection; and (6) Reporting and/or Recordkeeping burden. OMB invites public comment.

The Department of Education is especially interested in public comment addressing the following issues: (1) Is this collection necessary to the proper functions of the Department; (2) will

this information be processed and used in a timely manner; (3) is the estimate of burden accurate; (4) how might the Department enhance the quality, utility, and clarity of the information to be collected; and (5) how might the Department minimize the burden of this collection on the respondents, including through the use of information technology.

Dated: December 19, 2004.

Angela C. Arrington,

Leader, Regulatory Information Management Group, Office of the Chief Information Officer.

Institute of Education Sciences

Type of Review: New Collection.

Title: Integrated Postsecondary Education Data System (IPEDS) Minimum Data Set (MDS) (KA).

Frequency: Other: one time.

Affected Public: Businesses or other for-profit (primary); Not-for-profit institutions.

Reporting and Recordkeeping Hour Burden:

Responses: 13,000.

Burden Hours: 1,827.

Abstract: IPEDS is a system of surveys designed to collect basic data from postsecondary institutions in the U.S. To date, the main focus of IPEDS has been Title IV institutions, but institutions that do not participate in these federal student financial aid programs are becoming an increasingly important source of educational opportunity in the country. But their scope and nature are not well known. This survey is designed to arrive at a statistical estimate of the number of non-Title IV institutions.

Requests for copies of the proposed information collection request may be accessed from *http://edicsweb.ed.gov,* by selecting the ''Browse Pending Collections'' link and by clicking on link number 2432. When you access the information collection, click on ''Download Attachments'' to view. Written requests for information should be addressed to Vivian Reese, Department of Education, 400 Maryland Avenue, SW., Room 4050, Regional Office Building 3, Washington, DC 20202–4651 or to the e-mail address *vivian_reese@ed.gov.* Requests may also be electronically mailed to the Internet address *OCIO_RIMG@ed.gov* or faxed to 202–708–9346. Please specify the complete title of the information collection when making your request.

Comments regarding burden and/or the collection activity requirements should be directed to Kathy Axt at her e-mail address, *Kathy.Axt@ed.gov.* Individuals who use a telecommunications device for the deaf (TDD) may call the Federal Information Relay Service (FIRS) at 1–800–877–8339.

[FR Doc. 03–31817 Filed 12–24–03; 8:45 am]

BILLING CODE 4000–01–P

DEPARTMENT OF ENERGY

Notice of Preferred Nevada Rail Corridor

AGENCY: Office of Civilian Radioactive Waste Management, U.S. Department of Energy.

ACTION: Notice of the Preferred Nevada Rail Corridor.

SUMMARY: On July 23, 2002, the President signed into law (Pub. L. 107–200) a joint resolution of the U.S. House of Representatives and the U.S. Senate designating the Yucca Mountain site in Nye County, Nevada, for development as a geologic repository for the disposal of spent nuclear fuel and high-level radioactive waste. The Department of Energy (DOE or Department) is now responsible for planning and implementing a transportation program for the shipment of spent nuclear fuel and high-level radioactive waste, in the event the Nuclear Regulatory Commission authorizes receipt and possession of spent nuclear fuel and high-level radioactive waste at Yucca Mountain.

In the Final Environmental Impact Statement for a Geologic Repository for the Disposal of Spent Nuclear Fuel and High-Level Radioactive Waste at Yucca Mountain, Nye County, Nevada (DOE/EIS–0250F) (Final EIS), the Department evaluated various modes of transportation including mostly rail, mostly legal-weight truck and mostly heavy-haul truck. The Department identified the mostly rail alternative as its preferred mode of transportation in the Final EIS.

In the event that DOE selects the mostly rail alternative, a rail line would need to be constructed to connect the repository site at Yucca Mountain to an existing rail line in the State of Nevada. Accordingly, the Final EIS evaluated five rail corridors [1]—Caliente, Carlin, Caliente-Chalk Mountain, Jean, and Valley Modified. The Department, however, did not identify a preferred rail corridor in the Final EIS, but indicated it would do so at least 30 days before making any decisions on the selection of a corridor.

The Department is now announcing the Caliente rail corridor as its preferred corridor in which to construct a rail line in Nevada, and Carlin as a secondary preference. If the Department adopts the mostly rail mode in Nevada, DOE will issue a Record of Decision selecting a rail corridor no sooner than 30 days after publication of this preference announcement. If the Department selects a rail corridor, DOE will issue a Notice of Intent in the **Federal Register** to initiate the preparation of a rail alignment EIS under the National Environmental Policy Act (NEPA) to consider alternative alignments within the selected corridor for construction of a rail line. Under this scenario, the Department would anticipate holding public scoping meetings in early-to-mid February, 2004. The exact date, time and locations of the meetings would be announced in the Notice of Intent.

FOR FURTHER INFORMATION CONTACT: To obtain a copy of the Final EIS or for further information contact: Ms. Robin Sweeney, Office of National Transportation, Office of Civilian Radioactive Waste Management, U.S. Department of Energy, 1551 Hillshire Drive, M/S 011, Las Vegas, NV 89134, Telephone 1–800–967–3477. The Final EIS is available on the Internet at *ocrwm.doe.gov.*

For further information regarding the DOE NEPA process contact: Ms. Carol M. Borgstrom, Director, Office of NEPA Policy and Compliance (EH–42), U.S. Department of Energy, 1000 Independence Ave., SW., Washington, DC 20585, Telephone (202) 586–4600, or leave a message at 1–800–472–2756.

SUPPLEMENTARY INFORMATION:

Background

In the Final EIS, DOE analyzed a Proposed Action to construct, operate and monitor, and eventually close a geologic repository at Yucca Mountain. As part of the Proposed Action, DOE analyzed the potential impacts of transporting spent nuclear fuel and high-level radioactive waste from 72 commercial and 5 DOE sites to the Yucca Mountain site.[2] Transportation

[1] A corridor is a strip of land, approximately 400 meters (0.25 mile) wide, that encompasses one of several possible routes through which DOE could build a branch rail line. An alignment is the specific location of a rail line in a corridor.

[2] Additional sites (primarily research reactors) will ship spent nuclear fuel to DOE for disposal at the repository. Shipment from these sites to DOE is covered under a separate Environmental Impact Statement, *Programmatic Spent Nuclear Fuel Management and Idaho National Engineering Laboratory Environment Restoration and Waste Management Programs Environmental Impact Statement* (DOE/EIS–0203; April 1995), and associated Record of Decision (June 1, 1995; 60 FR 28680)). Two of these research reactors were recently closed and the spent fuel removed. Adding

Continued

could be accomplished using a variety of modes, including legal-weight truck, rail, heavy-haul truck, and possibly barge.

The Final EIS examined various national transportation scenarios and Nevada transportation implementing alternatives to estimate the range of potential environmental impacts that could occur. Two national transportation scenarios, referred to as the mostly legal-weight truck [3] scenario and the mostly rail [4] scenario, and three Nevada implementing alternatives, referred to as the legal-weight truck alternative, the rail alternative, and the heavy-haul truck [5] alternative are evaluated. In the Final EIS, the Department identified the mostly rail scenario as its preferred mode of transportation, both nationally and in the State of Nevada.

Implementation of the mostly rail scenario would require the construction of a rail line to connect the repository site at Yucca Mountain to an existing rail line in the State of Nevada. Accordingly, the Final EIS evaluated five rail corridors—Caliente, Carlin, Caliente-Chalk Mountain [6], Jean and Valley Modified. The Department, however, did not identify a preferred rail corridor in the Final EIS.

Preferred Nevada Rail Corridor

After consideration of public comments, the analyses of the Final EIS and other information, the Department has identified the Caliente corridor as its preferred rail corridor with the Carlin Corridor as the secondary preference. The Department's preference for Caliente takes into consideration many factors, including its more remote location, the diminished likelihood of land use conflicts, concerns raised by Nevadans, and national security issues raised by the U.S. Air Force on the Caliente-Chalk Mountain corridor. Approximately one-third of the Caliente and Carlin corridors overlap. Since the Carlin corridor has similar attributes overall, DOE has identified the Carlin corridor as the secondary preference in the event the Caliente corridor is not selected.

If the Department adopts the mostly rail mode, DOE will issue a Record of Decision selecting a rail corridor no sooner than 30 days after publication of this preference announcement. If the Department selects a rail corridor, DOE will issue a Notice of Intent in the **Federal Register** to initiate the preparation of a rail alignment EIS under NEPA to consider alternative alignments within the selected corridor for construction of a rail line.

Issued in Washington, DC, December 23, 2003.

Margaret S.Y. Chu,

Director, Office of Civilian Radioactive Waste Management.

[FR Doc. 03–32029 Filed 12–24–03; 8:45 am]

BILLING CODE 6450–01–P

these sites to the 77 sites listed above results in a total of 129 sites with spent nuclear fuel or high-level waste destined for repository disposal.

[3] A truck with a gross vehicle weight (truck and cargo) of less than 80,000 pounds having dimensions, axle spacing, and if applicable, axle loads within Federal and state limits.

[4] Rail is defined to include vehicles, such as locomotives and specialized freight cars, with steel wheels running on steel rails using standard gauge that is compatible with the U.S. freight rail network.

[5] A heavy-haul truck is an overweight, overdimension vehicle that must have permits from state highway authorities to use public highways. An intermodal transfer station is a facility at the junction of rail and road transportation used to transfer shipping casks containing radioactive materials from rail to truck, and empty casks from truck to rail.

[6] As stated in the Final EIS, DOE considers the Caliente-Chalk Mountain rail corridor to be non-preferred, because of adverse effects on the security and operations of the Nevada Test and Training Range.

DEPARTMENT OF ENERGY

Federal Energy Regulatory Commission

[Docket No. EL04–11–000]

CAlifornians for Renewable Energy, Inc., (CARE), Complainant, v. Calpine Energy Services, L.P., and the California Department of Water Resources, Respondents; Notice of Complaint

October 23, 2003.

Take notice that on October 20, 2003, CAlifornians for Renewable Energy, Inc. (CARE) (Complainant) submitted a complaint against Calpine, a seller of long term contracts to the California Department of Water Resources (CDWR), a buyer, collectively (Respondents) alleging that the prices, terms, and conditions of such contracts are unjust and unreasonable, Calpine and CDWR failed to file their rates pursuant to Section 205 of the Federal Power Act (FPA), they abrogate the terms and conditions under their revised contract 2 product 1 requiring performance on specific construction milestones, to provide timely status reports and, to the extent applicable, are not in the public interest. Complainant alleges that Respondents obtained the prices, terms, and conditions in the contracts through the exercise of market power, in violation of the FPA, and that the rates charged do not serve the ''public interest'' under the FPA and are in fact unduly preferential and discriminatory against third party customers, and impose an ''excessive burden'' on these customers among whom are CARE's members who CARE is representing. Complaint alleges Respondents' actions are causing injury to the citizens and ratepayers, including CARE's members that CARE is representing.

CARE states that copies of this filing were served upon Respondents and other interested parties.

Any person desiring to intervene or to protest this filing should file with the Federal Energy Regulatory Commission, 888 First Street NE., Washington, DC 20426, in accordance with Rules 211 and 214 of the Commission's Rules of Practice and Procedure (18 CFR 385.211 and 385.214). Protests will be considered by the Commission in determining the appropriate action to be taken, but will not serve to make protestants parties to the proceeding. Any person wishing to become a party must file a motion to intervene. All such motions or protests should be filed on or before the comment date, and, to the extent applicable, must be served on the applicant and on any other person designated on the official service list. This filing is available for review at the Commission or may be viewed on the Commission's web site at *http://www.ferc.gov,* using the eLibrary (FERRIS) link. Enter the docket number excluding the last three digits in the docket number field to access the document. For assistance, please contact FERC Online Support at *FERCOnlineSupport@ferc.gov* or toll-free at (866) 208–3676, or for TTY, contact (202) 502–8659. Protests and interventions may be filed electronically via the Internet in lieu of paper; *see* 18 CFR 385.2001(a)(1)(iii) and the instructions on the Commission's web site under the ''e-Filing'' link. The Commission strongly encourages electronic filings.

Comment Date: November 10, 2003.

Linda Mitry,

Acting Secretary.

[FR Doc. E3–00650 Filed 12–24–03; 8:45 am]

BILLING CODE 6717–01–P

DEPARTMENT OF ENERGY

Federal Energy Regulatory Commission

[Docket No. CP04–32–000]

CenterPoint Energy Gas Transmission Company; Notice of Request Under Blanket Authorization

December 18, 2003.

Take notice that on December 12, 2003, CenterPoint Energy Gas Transmission Company (CEGT), 1111 Louisiana Street, Houston, Texas 77002–5231, filed in Docket No. CP04–32–000 an application pursuant to CEGT's blanket authority granted on September 1, 1982, at Docket No. CP82–401–000. CEGT notes that its initial blanket authority was amended on February 10, 1983, in Docket Nos. CP82–384–000 and CP82–384–001. CEGT's application requests for authorization to abandon by sale and transfer certain above ground facilities in Oklahoma, all as more fully set forth in the request which is on file with the Commission and open to public inspection.

Any questions regarding this application should be directed to Lawrence O. Thomas, Director-Rates & Regulatory, CenterPoint Energy Gas Transmission Company, P.O. Box 21734, Shreveport, Louisiana 71151, at (318) 429–2804.

This filing is available for review at the Commission or may be viewed on the Commission's Web site at *http://www.ferc.fed.gov* using the ''eLibrary'' link. Enter the docket number excluding the last three digits in the docket number field to access the document. For assistance, please contact FERC Online Support at *FERCOnlineSupport@ferc.gov* or toll-free at (866) 208–3676, or for TTY, contact (202) 502–8659. Comments, protests and interventions may be filed electronically via the Internet in lieu of paper. *See* 18 CFR 385.2001(a)(1)(iii) and the instructions on the Commission's Web site under the ''e-Filing'' link. The Commission strongly encourages intervenors to file electronically.

Any person or the Commission's staff may, within 45 days after issuance of the instant notice by the Commission, file pursuant to Rule 214 of the Commission's Procedural Rules (18 CFR 855.214) a motion to intervene or notice of intervention and pursuant to section 157.205 of the Regulations under the Natural Gas Act (18 CFR 157.205) a protest to the request. If no protest is filed within the time allowed therefor, the proposed activity shall be deemed to be authorized effective the day after the time allowed for filing a protest. If a protest is filed and not withdrawn within 30 days after the time allowed for filing a protest, the instant request shall be treated as an application for authorization pursuant to section 7 of the Natural Gas Act.

Comment Date: February 2, 2004.

Magalie R. Salas,

Secretary.

[FR Doc. E3–00635 Filed 12–24–03; 8:45 am]

BILLING CODE 6717–01–P

DEPARTMENT OF ENERGY

Federal Energy Regulatory Commission

[Docket No. RP04–59–001]

Chandeleur Pipe Line Company; Notice of Compliance Filing

December 18, 2003.

Take notice that on December 11, 2003, Chandeleur Pipe Line Company (Chandeleur) tendered for filing as part of its FERC Gas Tariff, Second Revised Volume No. 1, 2nd Substitute Thirteenth Revised Sheet No. 5, with an effective date of January 1, 2004.

Chandeleur states that the filing is being made to support an adjustment to its Fuel and Line Loss Allowance effective January 1, 2004.

Any person desiring to protest said filing should file a protest with the Federal Energy Regulatory Commission, 888 First Street NE., Washington, DC 20426, in accordance with Section 385.211 of the Commission's Rules and Regulations. All such protests must be filed in accordance with section 154.210 of the Commission's Regulations. Protests will be considered by the Commission in determining the appropriate action to be taken, but will not serve to make protestants parties to the proceedings. This filing is available for review at the Commission in the Public Reference Room or may be viewed on the Commission's Web site at *http://www.ferc.gov* using the eLibrary link. Enter the docket number excluding the last three digits in the docket number field to access the document. For assistance, please contact FERC Online Support at *FERCOnlineSupport@ferc.gov* or toll-free at (866) 208–3676, or TTY, contact (202) 502–8659. The Commission strongly encourages electronic filings. *See* 18 CFR 385.2001(a)(1)(iii) and the instructions on the Commission's Web site under the e-Filing link.

Magalie R. Salas,

Secretary.

[FR Doc. E3–00647 Filed 12–24–03; 8:45 am]

BILLING CODE 6717–01–P

DEPARTMENT OF ENERGY

Federal Energy Regulatory Commission

[Docket No. RP04–38–001]

Columbia Gas Transmission Corporation; Notice of Compliance Filing

December 18, 2003.

Take notice that on December 15, 2003, Columbia Gas Transmission Corporation (Columbia) tendered for filing as part of its FERC Gas Tariff, Second Revised Volume No. 1, the following tariff sheets, bearing a proposed effective date of November 30, 2003:

Fourth Revised Sheet No. 100
Fourth Revised Sheet No. 105
Sixth Revised Sheet No. 116
Original Sheet No. 116A
Fourth Revised Sheet No. 130
Fifth Revised Sheet No. 166
Seventh Revised Sheet No. 295

Columbia states that on October 31, 2003, it made a filing with the Commission in Docket No. RP04–38 to allow shippers the ability to separate previously combined service agreements. Columbia states that on November 28, 2003, the Commission approved the filing effective November 30, 2003, subject to certain modifications.

Columbia states that copies of its filing have been mailed to all firm customers, interruptible customers and affected state commissions.

Any person desiring to protest said filing should file a protest with the Federal Energy Regulatory Commission, 888 First Street NE., Washington, DC 20426, in accordance with Section 385.211 of the Commission's Rules and Regulations. All such protests must be filed in accordance with section 154.210 of the Commission's Regulations. Protests will be considered by the Commission in determining the appropriate action to be taken, but will not serve to make protestants parties to the proceedings. This filing is available for review at the Commission in the Public Reference Room or may be viewed on the Commission's Web site at *http://www.ferc.gov* using the eLibrary link. Enter the docket number excluding the last three digits in the docket

number field to access the document. For assistance, please contact FERC OnlineSupport at *FERCOnlineSupport@ferc.gov* or toll-free at (866) 208–3676, or TTY, contact (202) 502–8659. The Commission strongly encourages electronic filings. *See*, 18 CFR 385.2001(a)(1)(iii) and the instructions on the Commission's Web site under the e-Filing link.

Magalie R. Salas,

Secretary.

[FR Doc. E3–00645 Filed 12–24–03; 8:45 am]

BILLING CODE 6717–01–P

DEPARTMENT OF ENERGY

Federal Energy Regulatory Commission

[Docket No. RP95–408–055]

Columbia Gas Transmission Corporation; Notice of Compliance Filing

December 18, 2003.

Take notice that on December 15, 2003, Columbia Gas Transmission Corporation (Columbia) tendered for filing as part of its FERC Gas Tariff, Second Revised Volume No. 1, the following revised tariff sheets, bearing a proposed effective date of January 1, 2004:

Sixty-sixth Revised Sheet No. 25
Sixty-sixth Revised Sheet No. 26
Sixty-sixth Revised Sheet No. 27
Thirtieth Revised Sheet No. 30A

Columbia states that this filing is being submitted pursuant to Stipulation I, Article I, Section E, True-up Mechanism, of the Settlement (Settlement) in Docket No. RP95–408 *et al.*, approved by the Commission on April 17, 1997 (79 FERC ¶61,044 (1997)). Columbia states that under the approved section of the Settlement, Columbia is required to true-up its collections pursuant to the Settlement Component for 12-month periods commencing November 1, 1996 and ending October 31, 2004. The seventh 12-month period (Period VII) ended October 31, 2003. Columbia further states it is making this true-up filing in compliance with the Settlement to return a net over-recovery of $3,250,607 for Period VII, which includes interest and the true-up of the Period VI Settlement Component adjustment, through an adjustment to the Settlement Component of the base rates for the period January 1, 2004 through October 31, 2004.

Columbia states that copies of its filing have been mailed to all firm customers, interruptible customers, and affected state commissions.

Any person desiring to protest said filing should file a protest with the Federal Energy Regulatory Commission, 888 First Street NE., Washington, DC 20426, in accordance with Section 385.211 of the Commission's Rules and Regulations. All such protests must be filed in accordance with Section 154.210 of the Commission's Regulations. Protests will be considered by the Commission in determining the appropriate action to be taken, but will not serve to make protestants parties to the proceedings. This filing is available for review at the Commission in the Public Reference Room or may be viewed on the Commission's Web site at *http://www.ferc.gov* using the eLibrary link. Enter the docket number excluding the last three digits in the docket number field to access the document. For assistance, please contact FERC Online Support at *FERCOnlineSupport@ferc.gov* or toll-free at (866) 208–3676, or TTY, contact (202) 502–8659. The Commission strongly encourages electronic filings. *See*, 18 CFR 385.2001(a)(1)(iii) and the instructions on the Commission's Web site under the e-Filing link.

Magalie R. Salas,

Secretary.

[FR Doc. E3–00648 Filed 12–24–03; 8:45 am]

BILLING CODE 6717–01–P

DEPARTMENT OF ENERGY

Federal Energy Regulatory Commission

[Docket No. RP04–39–001]

Columbia Gulf Transmission Company; Notice of Compliance Filing

December 18, 2003.

Take notice that on December 15, 2003, Columbia Gulf Transmission Company (Columbia Gulf) tendered for filing as part of its FERC Gas Tariff, Second Revised Volume No. 1, the following tariff sheets, bearing a proposed effective date of November 30, 2003:

Second Revised Sixth Revised Sheet No. 39
Second Revised Sixth Revised Sheet No. 46
Original Sheet No. 46.01
Ninth Revised Sheet No. 154

Columbia Gulf states that on October 31, 2003, it made a filing with the Commission in Docket No. RP04–39 to allow shippers the ability to combine multiple service agreements under the same rate schedule into a single service agreement and to separate previously combined service agreements as necessary. Columbia Gulf states that the instant filing is in compliance with the Commission's Order issued on November 28, 2003, effective November 30, 2003, subject to certain modifications.

Columbia Gulf states that copies of its filing have been mailed to all firm customers, interruptible customers and affected state commissions.

Any person desiring to protest said filing should file a protest with the Federal Energy Regulatory Commission, 888 First Street NE., Washington, DC 20426, in accordance with section 385.211 of the Commission's Rules and Regulations. All such protests must be filed in accordance with section 154.210 of the Commission's Regulations. Protests will be considered by the Commission in determining the appropriate action to be taken, but will not serve to make protestants parties to the proceedings. This filing is available for review at the Commission in the Public Reference Room or may be viewed on the Commission's Web site at *http://www.ferc.gov* using the eLibrary link. Enter the docket number excluding the last three digits in the docket number field to access the document. For assistance, please contact FERC Online Support at *FERCOnlineSupport@ferc.gov* or toll-free at (866) 208–3676, or TTY, contact (202) 502–8659. The Commission strongly encourages electronic filings. *See*, 18 CFR 385.2001(a)(1)(iii) and the instructions on the Commission's Web site under the e-Filing link.

Magalie R. Salas,

Secretary.

[FR Doc. E3–00646 Filed 12–24–03; 8:45 am]

BILLING CODE 6717–01–P

DEPARTMENT OF ENERGY

Federal Energy Regulatory Commission

[Docket No. RP04–107–000]

Kinder Morgan Interstate Gas Transmission LLC; Notice of Tariff Filing

December 18, 2003.

Take notice that on December 12, 2003, Kinder Morgan Interstate Gas Transmission LLC (KMIGT) tendered for filing its annual reconciliation filing pursuant to Section 35 of its General Terms and Conditions of its FERC Gas Tariff, Fourth Revised Volume No. 1–B.

KMIGT has served copies of this filing upon all jurisdictional customers, interested State Commissions, and other interested parties.

Any person desiring to be heard or to protest said filing should file a motion to intervene or a protest with the Federal Energy Regulatory Commission, 888 First Street, NE., Washington, DC 20426, in accordance with sections 385.214 or 385.211 of the Commission's Rules and Regulations. All such motions or protests must be filed in accordance with section 154.210 of the Commission's Regulations. Protests will be considered by the Commission in determining the appropriate action to be taken, but will not serve to make protestants parties to the proceedings. Any person wishing to become a party must file a motion to intervene. This filing is available for review at the Commission in the Public Reference Room or may be viewed on the Commission's Web site at *http://www.ferc.gov* using the eLibrary. Enter the docket number excluding the last three digits in the docket number field to access the document. For assistance, please contact FERC Online Support at *FERCOnlineSupport@ferc.gov* or toll-free at (866) 208–3676, or TTY, contact (202) 502–8659. The Commission strongly encourages electronic filings. *See*, 18 CFR 385.2001(a)(1)(iii) and the instructions on the Commission's Web site under the e-Filing link.

Magalie R. Salas,

Secretary.

[FR Doc. E3–00642 Filed 12–24–03; 8:45 am]

BILLING CODE 6717–01–P

DEPARTMENT OF ENERGY

Federal Energy Regulatory Commission

[Docket No. EL02–111–008]

Midwest Independent Transmission System Operator, Inc.; Notice of Application

October 23, 2003.

Take notice that on October 17, 2003, pursuant to the Commission's October 14, 2003 Order in Docket No. EL02–111–000, the GridAmerica Companies and the Midwest Independent Transmission System Operator, Inc. (Midwest ISO) submitted for filing revised tariff sheets reflecting revisions to the effective date component of the previously proposed revisions to its Tariff filed on August 22, 2003 to eliminate certain of the inter-RTO Regional Through and Out Rates.

The Midwest ISO has also requested waiver of the service requirements set forth in 18 CFR 385.2010. The Midwest ISO states that it has electronically served a copy of this filing, with attachments, upon all Midwest ISO Members, Member representatives of Transmission Owners and Non-Transmission Owners, the Midwest ISO Advisory Committee participants, as well as all state commissions within the region. The Midwest ISO also states that the filing has been electronically posted on the Midwest ISO's Website at *http://www.midwestiso.org* under the heading ''Filings to FERC'' for other interested parties in this matter. The Midwest ISO will provide hard copies to any interested parties upon request.

Any person desiring to intervene or to protest this filing should file with the Federal Energy Regulatory Commission, 888 First Street NE., Washington, DC 20426, in accordance with Rules 211 and 214 of the Commission's Rules of Practice and Procedure (18 CFR 385.211 and 385.214). Protests will be considered by the Commission in determining the appropriate action to be taken, but will not serve to make protestants parties to the proceeding. Any person wishing to become a party must file a motion to intervene. All such motions or protests should be filed on or before the comment date, and, to the extent applicable, must be served on the applicant and on any other person designated on the official service list. This filing is available for review at the Commission or may be viewed on the Commission's web site at *http://www.ferc.gov*, using the eLibrary (FERRIS) link. Enter the docket number excluding the last three digits in the docket number field to access the document. For assistance, please contact FERC Online Support at *FERCOnlineSupport@ferc.gov* or toll-free at (866) 208–3676, or for TTY, contact (202) 502–8659. Protests and interventions may be filed electronically via the Internet in lieu of paper; *see* 18 CFR 385.2001(a)(1)(iii) and the instructions on the Commission's Web site under the ''e-Filing'' link. The Commission strongly encourages electronic filings.

Comment Date: November 7, 2003.

Linda Mitry,

Acting Secretary.

[FR Doc. E3–00651 Filed 12–24–03; 8:45 am]

BILLING CODE 6717–01–P

DEPARTMENT OF ENERGY

Federal Energy Regulatory Commission

[Docket No. ES03–42–001]

NewCorp Resources Electric Cooperative, Inc.; Notice Of Application

December 18, 2003.

Take notice that on December 12, 2003, NewCorp Resources Electric Cooperative, Inc. (NewCorp) submitted an application pursuant to section 204 of the Federal Power Act seeking an amendment to prior authority granted in Docket No. ES03–42–000 to include authorization for a loan to NewCorp from its parent company, Cap Rock Energy Corporation, in an amount of $5,962,000.

NewCorp also requests a waiver from the Commission's competitive bidding and negotiated placement requirements at 18 CFR 34.2.

Any person desiring to intervene or to protest this filing should file with the Federal Energy Regulatory Commission, 888 First Street, NE., Washington, DC 20426, in accordance with Rules 211 and 214 of the Commission's Rules of Practice and Procedure (18 CFR 385.211 and 385.214). Protests will be considered by the Commission in determining the appropriate action to be taken, but will not serve to make protestants parties to the proceeding. Any person wishing to become a party must file a motion to intervene. All such motions or protests should be filed on or before the comment date, and, to the extent applicable, must be served on the applicant and on any other person designated on the official service list. This filing is available for review at the Commission or may be viewed on the Commission's Web site at *http://www.ferc.gov*, using the ''FERRIS'' link. Enter the docket number excluding the last three digits in the docket number field to access the document. For assistance, please contact FERC Online Support at *FERCOnlineSupport@ferc.gov* or toll-free at (866) 208–3676, or for TTY, contact (202) 502–8659. Protests and interventions may be filed electronically via the Internet in lieu of paper; *see* 18 CFR 385.2001(a)(1)(iii) and the instructions on the Commission's Web site under the ''e-Filing'' link. The Commission strongly encourages electronic filings.

Comment Date: December 24, 2003.

Magalie R. Salas,
Secretary.
[FR Doc. E3–00636 Filed 12–24–03; 8:45 am]
BILLING CODE 6717–01–P

DEPARTMENT OF ENERGY

Federal Energy Regulatory Commission

[Docket No. RP03–507–002]

Northern Border Pipeline Company; Notice of Compliance Filing

December 18, 2003.

Take notice that on December 12, 2003, Northern Border Pipeline Company (Northern Border) tendered for filing to become part of Northern Border Pipeline Company's FERC Gas Tariff, First Revised Volume No. 1, the following tariff sheets to become effective July 1, 2003:

Second Substitute Fifth Revised Sheet No. 272
Second Substitute Original Sheet No. 272A
Substitute Original Sheet No. 272A.01

Northern Border states that the purpose of this filing is to comply with the Commission's Order at Docket No. RP03–507–001 dated November 18, 2003, 105 FERC ¶ 61,228, wherein the Commission directed Northern Border to file revised tariff sheets consistent with the conditions as discussed in the body of the Order.

Northern Border states that copies of this filing have been sent to all of Northern Border's contracted shippers and interested state regulatory commissions.

Any person desiring to protest said filing should file a protest with the Federal Energy Regulatory Commission, 888 First Street NE., Washington, DC 20426, in accordance with section 385.211 of the Commission's Rules and Regulations. All such protests must be filed in accordance with section 154.210 of the Commission's Regulations. Protests will be considered by the Commission in determining the appropriate action to be taken, but will not serve to make protestants parties to the proceedings. This filing is available for review at the Commission in the Public Reference Room or may be viewed on the Commission's Web site at *http://www.ferc.gov* using the eLibrary link. Enter the docket number excluding the last three digits in the docket number field to access the document. For assistance, please contact FERC Online Support at *FERCOnlineSupport@ferc.gov* or toll-free at (866) 208–3676, or TTY, contact (202) 502–8659. The Commission strongly encourages electronic filings. *See*, 18 CFR 385.2001(a)(1)(iii) and the instructions on the Commission's Web site under the e-Filing link.

Magalie R. Salas,
Secretary.
[FR Doc. E3–00641 Filed 12–24–03; 8:45 am]
BILLING CODE 6717–01–P

DEPARTMENT OF ENERGY

Federal Energy Regulatory Commission

[Docket No. GT02–38–008]

Northern Natural Gas Company; Notice of Compliance Filing

December 18, 2003.

Take notice that on December 15, 2003, Northern Natural Gas Company (Northern), tendered for filing in its FERC Gas Tariff, Fifth Revised Volume No. 1 the following tariff sheets, with an effective date of February 23, 2003:

3 Substitute Third Revised Sheet No. 285
2 Substitute Original Sheet No. 285B

Northern states that it is filing the above-referenced tariff sheets in compliance with the Commission's November 18, 2003 Order, relating to creditworthiness tariff provisions.

Northern further states that copies of the filing have been mailed to each of its customers and interested State Commissions.

Any person desiring to protest said filing should file a protest with the Federal Energy Regulatory Commission, 888 First Street NE., Washington, DC 20426, in accordance with section 385.211 of the Commission's Rules and Regulations. All such protests must be filed in accordance with section 154.210 of the Commission's Regulations. Protests will be considered by the Commission in determining the appropriate action to be taken, but will not serve to make protestants parties to the proceedings. This filing is available for review at the Commission in the Public Reference Room or may be viewed on the Commission's Web site at *http://www.ferc.gov* using the eLibrary link. Enter the docket number excluding the last three digits in the docket number field to access the document. For assistance, please contact FERC Online Support at *FERCOnlineSupport@ferc.gov* or toll-free at (866) 208–3676, or TTY, contact (202) 502–8659. The Commission strongly encourages electronic filings. *See*, 18 CFR 385.2001(a)(1)(iii) and the instructions on the Commission's Web site under the e-Filing link.

Magalie R. Salas,
Secretary.
[FR Doc. E3–00637 Filed 12–24–03; 8:45 am]
BILLING CODE 6717–01–P

DEPARTMENT OF ENERGY

Federal Energy Regulatory Commission

[Project No. 2105–089]

Pacific Gas and Electric Company; Notice Granting Late Intervention

December 18, 2003.

On December 26, 2002, the Commission issued a notice of application accepted for filing and soliciting motions to intervene and protests for the Upper North Fork Feather River Hydroelectric Project 2105, located in the vicinity of the community of Chester, Plumas County, California. The notice established June 20, 2003, as the deadline for filing motions to intervene.

On September 10, 2003, the Anglers Committee Against Artificial Whitewater filed a late motion to intervene. Granting the motion to intervene will not unduly delay or disrupt the proceeding, or prejudice other parties to it. Therefore, pursuant to Rule 214,[1] the motion to intervene filed by the Anglers Committee against Artificial Whitewater is granted, subject to the Commission's rules and regulations.

Magalie R. Salas,
Secretary.
[FR Doc. E3–00639 Filed 12–24–03; 8:45 am]
BILLING CODE 6717–01–P

DEPARTMENT OF ENERGY

Federal Energy Regulatory Commission

[Docket No. CP01–67–001]

Southwest Gas Storage Company; Notice of Motion To Vacate

December 18, 2003.

On December 9, 2003, Southwest Gas Company (Southwest), filed in Docket No. CP01–67–001 a motion to vacate, in part, the certificated authority previously granted by an Order issued in Docket No. CP01–67–000 which permitted Southwest to abandon, by removal, and replace certain pipeline facilities and recomplete five existing

[1] 18 CFR 385.214 (2003).

injection/withdrawal wells at its Howell Storage Field in Livingston County, Michigan, all as more fully set forth in the motion which is on file with the Commission and open to public inspection. This filing may be viewed on the Web at *http://www.ferc.gov* using the ''eLibrary'' (formerly ''FERRIS'') link. Enter the docket number excluding the last three digits in the docket number field to access the document. For assistance, contact FERC Online Support at *FERCOnlineSupport@ferc.gov* or toll-free at (866) 208–3676, or for TTY, contact (202) 502–8659.

Any questions regarding the application should be directed to William Grygar, Vice President, Rates and Regulatory Affairs, P. O. Box 4967, Houston, Texas, at (713) 989–7000.

There are two ways to become involved in the Commission's review of this project. First, any person wishing to obtain legal status by becoming a party to the proceedings for this project should, on or before the comment date stated below, file with the Federal Energy Regulatory Commission, 888 First Street, NE., Washington, DC 20426, a motion to intervene or a protest in accordance with the requirements of the Commission's Rules of Practice and Procedure (18 CFR 385.214 or 385.211) and the Regulations under the NGA (18 CFR 157.10). A person obtaining party status will be placed on the service list maintained by the Secretary of the Commission and will receive copies of all documents filed by the applicant and by all other parties. A party must submit 14 copies of filings made with the Commission and must mail a copy to the applicant and to every other party in the proceeding. Only parties to the proceeding can ask for court review of Commission orders in the proceeding.

However, a person does not have to intervene in order to have comments considered. The second way to participate is by filing with the Secretary of the Commission, as soon as possible, an original and two copies of comments in support of or in opposition to this project. The Commission will consider these comments in determining the appropriate action to be taken, but the filing of a comment alone will not serve to make the filer a party to the proceeding. The Commission's rules require that persons filing comments in opposition to the project provide copies of their protests only to the party or parties directly involved in the protest.

Persons who wish to comment only on the environmental review of this project should submit an original and two copies of their comments to the Secretary of the Commission. Environmental commenters will be placed on the Commission's environmental mailing list, will receive copies of the environmental documents, and will be notified of meetings associated with the Commission's environmental review process. Environmental commenters will not be required to serve copies of filed documents on all other parties. However, the non-party commenters will not receive copies of all documents filed by other parties or issued by the Commission (except for mailing of environmental documents issued by the Commission) and will not have the right to seek court review of the Commission's final order.

Comments, protests and interventions may be filed electronically via the Internet in lieu of paper. The Commission strongly encourages electronic filings. *See,* 18 CFR 385.2001(a)(1)(iii) and instructions on the Commission's Web site under the ''e-Filing'' link.

Comment Date: January 9, 2004.

Magalie R. Salas,

Secretary.

[FR Doc. E3–00649 Filed 12–24–03; 8:45 am]

BILLING CODE 6717–01–P

DEPARTMENT OF ENERGY

Federal Energy Regulatory Commission

[Docket No. RP96–359–019]

Transcontinental Gas Pipe Line Corporation; Notice of Negotiated Rates

December 18, 2003.

Take notice that on December 15, 2003, Transcontinental Gas Pipe Line Corporation (Transco) tendered for a copy of the executed Rate Schedule FT service agreements with Atmos Energy Corporation (Atmos) and Municipal Electric Authority of Georgia (MEAG) that contain the negotiated rates for firm transportation service under Phase II of Transco's Momentum Expansion Project. Transco states that the effective dates of these negotiated rate transactions are February 1, 2004 for MEAG and May 1, 2004 for Atmos.

Transco states that copies of the filing are being mailed to its affected customers and interested state commissions.

Any person desiring to be heard or to protest said filing should file a motion to intervene or a protest with the Federal Energy Regulatory Commission, 888 First Street, NE., Washington, DC 20426, in accordance with sections 385.214 or 385.211 of the Commission's Rules and Regulations. All such motions or protests must be filed in accordance with section 154.210 of the Commission's Regulations. Protests will be considered by the Commission in determining the appropriate action to be taken, but will not serve to make protestants parties to the proceedings. Any person wishing to become a party must file a motion to intervene. This filing is available for review at the Commission in the Public Reference Room or may be viewed on the Commission's Web site at *http://www.ferc.gov* using the eLibrary. Enter the docket number excluding the last three digits in the docket number field to access the document. For assistance, please contact FERC Online Support at *FERCOnlineSupport@ferc.gov* or toll-free at (866) 208–3676, or TTY, contact (202) 502–8659. The Commission strongly encourages electronic filings. *See* 18 CFR 385.2001(a)(1)(iii) and the instructions on the Commission's Web site under the e-Filing link.

Magalie R. Salas,

Secretary.

[FR Doc. E3–00633 Filed 12–24–03; 8:45 am]

BILLING CODE 6717–01–P

DEPARTMENT OF ENERGY

Federal Energy Regulatory Commission

[Docket No. CP04–30–000]

Transcontinental Gas Pipe Line Corporation; Notice of Application

December 18, 2003.

Take notice that on December 12, 2003, Transcontinental Gas Pipe Line Corporation (Transco), P.O. Box 1396, Houston, Texas 77251, filed an application in Docket No. CP04–30–000 pursuant to section 7(c) of the Natural Gas Act (NGA) and Part 157(A) of the Federal Energy Regulatory Commission's Regulations (Commission), for a certificate of public convenience and necessity authorizing Transco's construction and operation of certain facilities at Compressor Station No. 140 (Station 140) in Spartanburg County, South Carolina to comply with the Clean Air Act Amendments of 1990, all as more fully set forth in the application which is on file with the Commission and open to public inspection.

Any questions regarding this application should be directed to David LaGroue, P.O. Box 1396, Houston, Texas 77251–1396, (713) 215–2721.

Any person desiring to be heard or to protest said filing should file a motion to intervene or a protest with the Federal Energy Regulatory Commission, 888 First Street, NE., Washington, DC 20426, in accordance with sections 385.214 or 385.211 of the Commission's Rules and Regulations. All such motions or protests must be filed on or before the date as indicated below. Protests will be considered by the Commission in determining the appropriate action to be taken, but will not serve to make protestants parties to the proceedings. Any person wishing to become a party must file a motion to intervene. This filing is available for review at the Commission in the Public Reference Room or may be viewed on the Commission's Web site at *http://www.ferc.gov* using the ''eLibrary'' (FERRIS). Enter the docket number excluding the last three digits in the docket number field to access the document. For assistance, please contact FERC Online Support at *FERCOnlineSupport@ferc.gov* or toll-free at (866) 208–3676, or TTY, contact (202) 502–8659. The Commission strongly encourages electronic filings. *See*, 18 CFR 385.2001(a)(1)(iii) and the instructions on the Commission's web site under the ''e-Filing'' link.

Comment Date: January 9, 2004.

Magalie R. Salas,

Secretary.

[FR Doc. E3–00634 Filed 12–24–03; 8:45 am]

BILLING CODE 6717–01–P

DEPARTMENT OF ENERGY

Federal Energy Regulatory Commission

[Docket No. RP04–108–000]

Tuscarora Gas Transmission Company; Notice of Tariff Filing

Take notice that on December 11, 2003, Tuscarora Gas Transmission Company (Tuscarora) tendered for filing as part of its FERC Gas Tariff, Original Volume No. 1, the following revised tariff sheets, effective as of January 17, 2004:

Third Revised Sheet No. 1
Sixth Revised Sheet No. 37C
First Revised Sheet No. 37D
First Revised Sheet No. 100

Tuscarora states that the purpose of this filing is to reflect on revised tariff sheets all of the tariff modifications previously accepted in two letter orders issued on November 18, 2003, in Docket Nos. RP00–487 and RP01–14, and in Docket No. RP04–28.

Tuscarora states that copies of the filing were mailed to all affected customers of Tuscarora and interested state commissions.

Any person desiring to be heard or to protest said filing should file a motion to intervene or a protest with the Federal Energy Regulatory Commission, 888 First Street NE., Washington, DC 20426, in accordance with Sections 385.214 or 385.211 of the Commission's Rules and Regulations. All such motions or protests must be filed in accordance with Section 154.210 of the Commission's Regulations. Protests will be considered by the Commission in determining the appropriate action to be taken, but will not serve to make protestants parties to the proceedings. Any person wishing to become a party must file a motion to intervene. This filing is available for review at the Commission in the Public Reference Room or may be viewed on the Commission's Web site at *http://www.ferc.gov* using the eLibrary. Enter the docket number excluding the last three digits in the docket number field to access the document. For assistance, please contact FERC Online Support at *FERCOnlineSupport@ferc.gov* or toll-free at (866) 208–3676, or TTY, contact (202) 502–8659. The Commission strongly encourages electronic filings. *See*, 18 CFR 385.2001(a)(1)(iii) and the instructions on the Commission's Web site under the e-Filing link.

Magalie R. Salas,

Secretary.

[FR Doc. E3–00643 Filed 12–24–03; 8:45 am]

BILLING CODE 6717–01–P

DEPARTMENT OF ENERGY

Federal Energy Regulatory Commission

[Project No. 12063–001]

Little Wood River; Ranch II Hydro; Notice of Paper Scoping and Soliciting Scoping Comments

December 18, 2003.

Take notice that the following hydroelectric application has been filed with the Commission and is available for public inspection:

a. *Type of Application:* Original Minor License.

b. *Project No.:* 12063–001.

c. *Date filed:* October 17, 2003.

d. *Applicant:* Mr. William Arkoosh.

e. *Name of Project:* Little Wood River Ranch II Hydroelectric Project.

f. *Location:* On the Little Wood River, near the Town of Shoshone, Lincoln County, Idaho. No lands of the United States would be affected.

g. *Filed Pursuant to:* Federal Power Act 16 U.S.C. 791 (a)–825(r).

h. *Applicant Contact:* William Arkoosh, 2005 Highway 26, Gooding, Idaho 83330, (208) 934–5387.

i. *FERC Contact:* Gaylord Hoisington, (202) 502–6032, *gaylord.hoisington@FERC.gov*.

j. Deadline for filing scoping comments is January 20, 2004.

All documents (original and eight copies) should be filed with: Magalie R. Salas, Secretary, Federal Energy Regulatory Commission, 888 First Street, NE., Washington, DC 20426.

The Commission's Rules of Practice and Procedure require all interveners filing documents with the Commission to serve a copy of that document on each person on the official service list for the project. Further, if an intervener files comments or documents with the Commission relating to the merits of an issue that may affect the responsibilities of a particular resource agency, they must also serve a copy of the document on that resource agency.

Scoping comments may be filed electronically via the Internet in lieu of paper. *See* 18 CFR 385.2001(a)(1)(iii) and the instructions on the Commission's Web site, *http://www.ferc.gov*, under the ''e-Filing'' link.

k. This application is not ready for environmental analysis at this time.

l. *Description of the Project:* The proposed new run-of-river project would consist of: (1) A 10-foot-high, 220-foot-long rock rubble diversion dam; (2) a 2,800-foot-long open feeder canal; (3) a concrete intake structure having two parallel 5-foot-diameter, 250-foot-long steel penstocks; (4) a 60-foot-long, 20-foot-wide, 25-foot-high concrete and steel power house containing two hydraulic Francis turbines with a total installed capacity of 1,500 kilowatts; (5) a 3,500-foot-long tailrace channel; (6) a 10,500-foot-long, 12.5-kilovolt transmission line; (7) an access road and (8) appurtenant facilities.

m. A copy of the application is available for review at the Commission in the Public Reference Room or may be viewed on the Commission's Web site at *http://www.ferc.gov* using the ''eLibrary'' link. Enter the docket number excluding the last three digits in the docket number field to access the document. For assistance, contact FERC Online Support at *FERCOnlineSupport@ferc.gov* or toll-free at 1–866–208–3676, or for TTY, (202) 502–8659. A copy is also available for inspection and reproduction at the address in item h above.

You may also register online at *http://www.ferc.gov/docs-filing/*

esubscription.asp to be notified via email of new filings and issuances related to this or other pending projects. For assistance, contact FERC Online Support.

n. *Scoping Process:* Scoping is intended to advise all parties regarding the proposed scope of the environmental analysis and to seek additional information pertinent to this analysis. The Commission intends to prepare an environmental assessment (EA) for the project in accordance with the National Environmental Policy Act. The EA will consider both site-specific and cumulative environmental impacts and reasonable alternatives to the proposed action.

At this time, the Commission staff do not propose to conduct any formal public or agency meetings or an on-site visit. Instead, we will solicit comments, recommendations, information, and alternatives by conducting paper scoping through issuing this scoping document.

Copies of the scoping document outlining the subject areas to be addressed in the EA were distributed to the parties on the Commission's mailing list. Copies of the scoping document are available for review at the Commission or may be viewed on the Commission's Web site at *http://www.ferc.gov*, using the ''FERRIS'' link. Enter the docket number excluding the last three digits in the docket number filed to access the document. For assistance, contact FERC Online Support at *FERConline@ferc.gov* or toll-free at (866)208–3676, or for TTY, contact (202)502–8659.

As part of scoping the staff will: (1) Summarize the environmental issues tentatively identified for analysis in the EA; (2) solicit from comments all available information, especially quantifiable data, on the resources at issue; (3) encourage comments from experts and the public on issues that should be analyzed in the EA, including viewpoints in opposition to, or in support of, the staff's preliminary views; (4) determine the resource issues to be addressed in the EA; and (5) identify those issues that require a detailed analysis, as well as those issues that do not require a detailed analysis. Consequently, interested entities are requested to file with the Commission any data and information concerning environmental resources and land uses in the project area and the subject project's impacts to the aforementioned.

o. The tentative schedule for preparing the Little Wood River Ranch II EA is:

Major milestone	Target date
Ready for Environmental Analysis Notice.	February 2004
EA Issued	May 2004

Magalie R. Salas,

Secretary.

[FR Doc. E3–00638 Filed 12–24–03; 8:45 am]

BILLING CODE 6717–01–P

DEPARTMENT OF ENERGY

Federal Energy Regulatory Commission

Notice of Application Ready for Environmental Analysis and Soliciting Comments, Recommendations, Terms and Conditions, and Prescriptions

December 18, 2003.

Take notice that the following hydroelectric application has been filed with the Commission and is available for public inspection.

a. *Type of Application:* New Major License.

b. *Project No.:* 382–026.

c. *Date filed:* February 26, 2003.

d. *Applicant:* Southern California Edison Company.

e. *Name of Project:* Borel Hydroelectric Project.

f. *Location:* On the Kern River near the town of Bodfish, Kern County, California. The canal intake for the project is located on approximately 188 acres of Sequoia National Forest Service lands.

g. *Filed Pursuant to:* Federal Power Act, 16 U.S.C. 791(a)–825(r).

h. *Applicant Contact:* Mr. Nino J. Mascolo, Senior Attorney, Southern California Edison Co., 2244 Walnut Grove Avenue, P.O. Box 800, Rosemead, California 91770.

i. *FERC Contact:* Emily Carter at (202) 502–6512 or *Emily.Carter@ferc.gov*.

j. *Deadline for filing comments, recommendations, terms and conditions, and prescriptions:* 60 days from the issuance of this notice. All reply comments must be filed with the Commission within 105 days from the date of this notice.

All documents (original and eight copies) should be filed with: Magalie R. Salas, Secretary, Federal Energy Regulatory Commission, 888 First Street NE., Washington, DC 20426.

The Commission's Rules of Practice require all intervenors filing documents with the Commission to serve a copy of that document on each person on the official service list for the project. Further, if an intervenor files comments or documents with the Commission relating to the merits of an issue that may affect the responsibilities of a particular resource agency, they must also serve a copy of the document on that resource agency.

Comments, recommendations, terms and conditions, and prescriptions may be filed electronically via the Internet in lieu of paper. The Commission strongly encourages electronic filings. *See* 18 CFR 385.2001(a)(1)(iii) and the instructions on the Commission's Web site (*http://www.ferc.gov*) under the ''eLibrary'' link.

k. This application has been accepted for filing and is now ready for environmental analysis.

l. The existing Borel Hydroelectric Project (Project) consists of: (1) A 158-foot long, 4-foot-high concrete diversion dam with fishway; (2) a 61-foot-long intake structure with three 10- by 10-foot radial gates; (3) a canal inlet structure consisting of a canal intake, trash racks, and a sluice gate; (4) a flowline with a combined total length of 1,985 feet of tunnel, 1,651feet of steel Lennon flume, 3,683 feet of steel siphon, and 51,835 feet of concrete-lined canal; (5) four steel penstocks—penstocks 1 and 2 are 526 feet long and 565 feet long, respectively with varying diameters between 42 and 60 inches, and penstocks 3 and 4 each have a 60-inch-diameter and extend 622 feet at which point they wye together to form a single 84-inch-diameter, 94-foot-long penstock; (6) a powerhouse with two 3,000-kW generators and one 6,000-kW generator for a total installed capacity of 12,000 kW or 12 MW; and (7) other appurtenant facilities. The Project has no storage capability and relies on water releases from Lake Isabella made by the U.S. Army Corp of Engineers.

m. A copy of the application is available for review at the Commission in the Public Reference Room or may be viewed on the Commission's Web site at *http://www.ferc.gov* using the ''eLibrary'' link. Enter the docket number excluding the last three digits in the docket number field to access the document. For assistance, contact FERC Online Support at *FERCOnlineSupport@ferc.gov* or toll-free at 1–866–208–3676, or for TTY, (202) 502–8659. A copy is also available for inspection and reproduction at the address in item h above.

You may also register online at *http://www.ferc.gov/docs-filing/esubscription.asp* to be notified via email of new filings and issuances related to this or other pending projects. For assistance, contact FERC Online Support.

n. Public notice of the filing of the initial development application, which has already been given, established the due date for filing competing applications or notices of intent.

Under the Commission's regulations, any competing development application must be filed in response to and in compliance with public notice of the initial development application. No competing applications or notices of intent may be filed in response to this notice.

All filings must (1) bear in all capital letters the title ''COMMENTS'', ''REPLY COMMENTS'', ''RECOMMENDATIONS,'' ''TERMS AND CONDITIONS,'' or ''PRESCRIPTIONS;'' (2) set forth in the heading the name of the applicant and the project number of the application to which the filing responds; (3) furnish the name, address, and telephone number of the person submitting the filing; and (4) otherwise comply with the requirements of 18 CFR 385.2001 through 385.2005. All comments, recommendations, terms and conditions or prescriptions must set forth their evidentiary basis and otherwise comply with the requirements of 18 CFR 4.34(b). Agencies may obtain copies of the application directly from the applicant. Each filing must be accompanied by proof of service on all persons listed on the service list prepared by the Commission in this proceeding, in accordance with 18 CFR 4.34(b), and 385.2010.

Magalie R. Salas,

Secretary.

[FR Doc. E3–00640 Filed 12–24–03; 8:45 am]

BILLING CODE 6717–01–P

DEPARTMENT OF ENERGY

Federal Energy Regulatory Commission

[Docket No. RP04–12–000]

Florida Gas Transmission Company; Notice Of Technical Conference

December 18, 2003.

The Commission, in its order of October 31, 2003 in the referenced docket directed that a technical conference be held to address proposals by Florida Gas Transmission Company (FGT) regarding shipper reconversion to Rate Schedule SFTS and minimum nominations under Rate Schedule NNTS.[1]

Take notice that a technical conference will be held on Wednesday, January 7, 2004, at 9 a.m., in a room to be designated at the Federal Energy Regulatory Commission, 888 First Street NE., Washington, DC 20426.

All interested parties are permitted to attend. For further information please contact: Andrea Hilliard at (202) 502–8288 or Frank Sparber at (202) 502–8335.

Magalie R. Salas,

Secretary.

[FR Doc. E3–00644 Filed 12–24–03; 8:45 am]

BILLING CODE 6717–01–P

[1] 105 FERC ¶ 61,171 (2003), at p.

ENVIRONMENTAL PROTECTION AGENCY

[FRL–7602–7]

Proposed CERCLA Administrative Cost Recovery Settlement; In Re: Old Colony Railroad Superfund Site, East Bridgewater, Massachusetts

AGENCY: Environmental Protection Agency (EPA).

ACTION: Notice; request for public comment.

SUMMARY: In accordance with section 122(i) of the Comprehensive Environmental Response, Compensation, and Liability Act, as amended (''CERCLA''), 42 U.S.C. 9622(i), notice is hereby given of a proposed administrative settlement for recovery of past response costs concerning the Old Colony Railroad Superfund Site in East Bridgewater, Massachusetts, with the following settling parties: Karl Fisher, Edith Fisher and West Union Corporation. In the settlement, which is based upon inability-to-pay, the Settling Parties have agreed to provide EPA access to certain site property to conduct any further investigation or response action as may be necessary, and to place, or to cooperate in the placement, of institutional controls on certain site property as may be determined by EPA to be necessary. The settlement includes a covenant not to sue the settling parties pursuant to section 107(a) of CERCLA, 42 U.S.C. 9607(a). For thirty (30) days following the date of publication of this notice, the Agency will receive written comments relating to the settlement. The Agency will consider all comments received and may modify or withdraw its consent to the settlement if comments received disclose facts or considerations which indicate that the settlement is inappropriate, improper, or inadequate. The Agency's response to any comments received will be available for public inspection with the Regional Docket Clerk, U.S. Environmental Protection Agency, Region I, One Congress Street, Suite 1100, Mailcode RCG, Boston, Massachusetts (U.S. EPA Docket No. CERCLA 01–2003–0039).

DATES: Comments must be submitted on or before January 28, 2004.

ADDRESSES: The proposed settlement is available for public inspection with the Regional Docket Clerk, One Congress Street, Boston, Massachusetts. A copy of the proposed settlement may be obtained from Ronald Gonzalez, U.S. Environmental Protection Agency, Region I, One Congress Street, Suite 1100, Mailcode SES, Boston, Massachusetts 02214, (617) 918–1786. Comments should reference the Old Colony Railroad Superfund Site, East Bridgewater, Massachusetts and EPA Docket No. 01–2003–0039 and should be addressed to the Docket Clerk, U.S. Environmental Protection Agency, Region I, One Congress Street, Suite 1100, Mailcode RCG, Boston, Massachusetts 02214.

FOR FURTHER INFORMATION CONTACT: Ronald Gonzalez, U.S. Environmental Protection Agency, Region I, One Congress Street, Suite 1100, Mailcode SES, Boston, Massachusetts 02214, (617) 918–1786.

Dated: December 5, 2003.

Susan Studlien,

Director, Office of Site Remediation and Restoration.

[FR Doc. 03–31870 Filed 12–24–03; 8:45 am]

BILLING CODE 6560–50–P

ENVIRONMENTAL PROTECTION AGENCY

[FRL–7602–6]

T.H. Agriculture & Nutrition Company Superfund Site; Notice of Proposed Settlement

AGENCY: Environmental Protection Agency.

ACTION: Notice of proposed settlement.

SUMMARY: Under section 122(h)(1) of the Comprehensive Environmental Response, Compensation, and Liability Act (CERCLA), 42 U.S.C. 9622(h)(1), the United States Environmental Protection Agency (EPA) has entered into an Agreement for Recovery of Past Costs (Agreement) at the T.H. Agriculture & Nutrition Company Superfund Site (Site) located in Albany, Dougherty County, Georgia, with Schwerman Trucking Company. EPA will consider public comments on the Agreement until January 28, 2004. EPA may withdraw from or modify the Agreement should such comments disclose facts or considerations which indicate the

Agreement is inappropriate, improper, or inadequate. Copies of the Agreement are available from: Ms. Paula V. Batchelor, U.S. Environmental Protection Agency, Region 4, Superfund Enforcement & Information Management Branch, Waste Management Division, 61 Forsyth Street, SW., Atlanta, Georgia 30303, (404) 562–8887.

Written comments may be submitted to Sharron T. Carter-Rogers at the above address within thirty (30) days of the date of publication.

Dated: December 15, 2003.

Rosalind H. Brown,

Chief, Superfund Enforcement Information & Management Branch, Waste Management Division.

[FR Doc. 03–31869 Filed 12–24–03; 8:45 am]

BILLING CODE 6560–50–P

FEDERAL MARITIME COMMISSION

[Petition No. P10–03]

Petition of National Customs Brokers and Forwarders Association of America, Inc. for Rulemaking; Notice of Filing

Notice is hereby given that National Customs Brokers and Forwarders Association of America, Inc. (''NCBFAA'') (''Petitioner'') has petitioned for the issuance of a rulemaking pursuant to 46 CFR 502.51. The NCBFAA seeks a rulemaking that would amend the financial responsibility requirements of regulations set forth in 46 CFR 515.21 *et seq.* The purpose of the proposed rule would be to provide a mechanism by which licensed non-vessel operating common carriers (''NVOCCs'') would be able on a voluntary basis to amend their existing bonds, filed pursuant to section 19 of the Shipping Act, 46 U.S.C. app. § 1718, and 46 CFR 515.21, as an alternative to making cash deposits in banks located in the People's Republic of China (''PRC'') as otherwise required by the PRC's new Regulations on International Maritime Transportation (''RIMT'') and the Implementing Rules promulgated thereunder. The NCBFAA believes that the proposed rulemaking would be an appropriate way of implementing recently negotiated provisions of the Agreement on Maritime Transport (the ''AMT'') and Memorandum on Consultations (''Memorandum'') between the U.S. and PRC governments, both of which were signed on December 8, 2003.

Specifically, the NCBFAA proposes that the FMC allow NVOCCs to amend their existing bonds by adding a Rider, which would comply with the RIMT requirement that all NVOCCs operating in the U.S.-PRC trades provide evidence of financial responsibility in the total amount of RMB 800,000 (or approximately U.S. $96,000). NCBFAA asserts that the Rider is necessary because the Commission's regulations generally only require a bond in the amount of U.S. $75,000 (not including an additional $10,000 for branch offices) for licensed NVOCCs. They believe that the proposed regulation would therefore be in accordance with the Memorandum because it would authorize licensed NVOCCs to add a Rider to existing bonds that would (1) increase the base amount of the bond by U.S. $21,000 and (2) provide that the bond would also be available for the payment of fines or reparation awards that might be imposed by the Chinese authorities due to the NVOCC's violation of the RIMT.

In order for the Commission to make a thorough evaluation of the Petition, interested persons are requested to submit views or arguments in reply to the petition no later than January 12, 2004. Replies shall consist of an original and 15 copies, be directed to the Secretary, Federal Maritime Commission, 800 North Capitol Street, NW., Washington, DC 20573–0001, and be served on Petitioner's counsel Edward D. Greenberg, Esq., Galland, Kharasch, Greenberg, Fellman & Swirsky, P.C., Attorneys At Law, Canal Square, 1054 Thirty-First Street, NW., Washington, DC 20007–4492. It is also requested that a copy of the reply be submitted in electronic form (WordPerfect, Word or ASCII) on diskette or emailed to *Secretary@fmc.gov.* The Petition will be posted on the Commission's homepage at *http://www.fmc.gov/Docket%20Log/Docket%20Log%20Index.htm.* All replies filed in response to the Petition will also be posted on the Commission's homepage at this location.

Interested parties may also make oral presentations in this proceeding. At the discretion of individual Commissioners, interested persons may request one-on-one meetings at which they may make presentations describing their views on the petition. Any meeting or meetings shall be completed before the close of the comment period. A summary or transcript of each oral presentation will be included in the record and must be submitted to the Secretary of the Commission within 5 days of the meeting. Persons wishing to make oral presentations should contact the Office of the Secretary to secure contact names and numbers for individual Commissioners.

Copies of the Petition also may be obtained by sending a request to the Office of the Secretary, Room 1046, or by calling (202) 523–5725. Parties participating in this proceeding may elect to receive service of the Commission's issuances in this proceeding through email in lieu of service by U.S. mail. A party opting for electronic service shall advise the Office of the Secretary in writing and provide an e-mail address where service can be made. Such request should be directed to *secretary@fmc.gov.*

Bryant L. VanBrakle,

Secretary.

[FR Doc. 03–31888 Filed 12–24–03; 8:45 am]

BILLING CODE 6730–01–P

FEDERAL RESERVE SYSTEM

Formations of, Acquisitions by, and Mergers of Bank Holding Companies

The companies listed in this notice have applied to the Board for approval, pursuant to the Bank Holding Company Act of 1956 (12 U.S.C. 1841 *et seq.*) (BHC Act), Regulation Y (12 CFR Part 225), and all other applicable statutes and regulations to become a bank holding company and/or to acquire the assets or the ownership of, control of, or the power to vote shares of a bank or bank holding company and all of the banks and nonbanking companies owned by the bank holding company, including the companies listed below.

The applications listed below, as well as other related filings required by the Board, are available for immediate inspection at the Federal Reserve Bank indicated. The application also will be available for inspection at the offices of the Board of Governors. Interested persons may express their views in writing on the standards enumerated in the BHC Act (12 U.S.C. 1842(c)). If the proposal also involves the acquisition of a nonbanking company, the review also includes whether the acquisition of the nonbanking company complies with the standards in section 4 of the BHC Act (12 U.S.C. 1843). Unless otherwise noted, nonbanking activities will be conducted throughout the United States. Additional information on all bank holding companies may be obtained from the National Information Center website at*www.ffiec.gov/nic/.*

Unless otherwise noted, comments regarding each of these applications must be received at the Reserve Bank indicated or the offices of the Board of Governors not later than January 23, 2004.

Federal Reserve Bank of St. Louis (Randall C. Sumner, Vice President) 411

Locust Street, St. Louis, Missouri 63166-2034:

1. Mercantile Bancorp, Inc., Quincy, Illinois; to acquire 56.07 percent of the voting shares of Mid-America Bancorp, Inc., Leawood, Kansas, and thereby indirectly acquire Heartland Bank, Leawood, Kansas.

Board of Governors of the Federal Reserve System, December 19, 2003.

Robert deV. Frierson,

Deputy Secretary of the Board.

[FR Doc. 03–31816 Filed 12–24–03; 8:45 am]

BILLING CODE 6210–01–S

GENERAL SERVICES ADMINISTRATION

[OMB Control No. 3090–0221]

GSA Board of Contract Appeals Rules Procedure

AGENCY: GSA Board of Contract Appeals, GSA.

ACTION: Notice of request for comments regarding a renewal to an existing OMB clearance.

SUMMARY: Under the provisions of the Paperwork Reduction Act of 1995 (44 U.S.C. Chapter 35), the General Services Administration, has submitted to the Office of Management and Budget (OMB) a request to review and approve a renewal of a currently approved information collection requirement regarding the GSA Board of Contract Appeals (GSBCA) Rules Procedures. A request for public comments was published at 68 FR 57463, October 3, 2003. No comments were received.

Public comments are particularly invited on: Whether this collection of information is necessary and whether it will have practical utility; whether our estimate of the public burden of this collection of information is accurate, and based on valid assumptions and methodology; ways to enhance the quality, utility, and clarity of the information to be collected.

DATES: Submit comments on or before: January 28, 2004.

FOR FURTHER INFORMATION CONTACT: Margaret Pfunder, Chief Counsel, GSA Board of Contract Appeals, Room 7022, 1800 F Street, NW., Washington, DC 20405 or telephone (202) 501–0272.

ADDRESSES: Submit comments regarding this burden estimate or any other aspect of this collection of information, including suggestions for reducing this burden to Ms. Jeanette Thornton, GSA Desk Officer, OMB, Room 10236, NEOB, Washington, DC 20503, and a copy to General Services Administration, Regulatory Secretariat, 1800 F Street, NW., Room 4035, Washington, DC 20405. Please cite OMB Control Number 3090–0221.

SUPPLEMENTARY INFORMATION:

A. Purpose

The GSBCA requires the information collected in order to conduct proceedings in contract appeals and petitions, and cost applications. Parties include those persons or entities filing appeals, petitions, cost applications, and government agencies.

B. Annual Reporting Burden

Respondents: 55
Responses Per Respondent: 1
Hours Per Response: .117
Total Burden Hours: 6.4
Obtaining Copies of Proposals: Requesters may obtain a copy of the information collection documents from the General Services Administration, Regulatory Secretariat (MVA), 1800 F Street, NW., Room 4035, Washington, DC 20405, telephone (202) 208–7312, or by faxing your request to (202) 501–4067. Please cite OMB Control No. 3090–0221, GSA Board of Contract Appeals Rules Procedure, in all correspondence.

Dated: December 17, 2003.

Michael W. Carleton,

Chief Information Officer.

[FR Doc. 03–31879 Filed 12–24–03; 8:45 am]

BILLING CODE 6820–AL–P

DEPARTMENT OF HEALTH AND HUMAN SERVICES

Centers for Disease Control and Prevention

[Program Announcement 04019]

Capacity Building Assistance To Improve the Delivery and Effectiveness of HIV Prevention Services for Racial/Ethnic Minority Populations; Notice of Availability of Funds—Amendment

A notice announcing the availability of fiscal year (FY) 2004 funds for cooperative agreements for Capacity Building Assistance to Improve the Delivery and Effectiveness of HIV Prevention Services for Racial/Ethnic Minority Populations was published in the **Federal Register**, Tuesday, December 2, 2003, Volume 68, Number 231, pages 67558–67566. The notice is amended as follows:

Page 67558, first column, Catalog of Federal Domestic Assistance Number, delete 93.943, and replace with 93.939.

Dated: December 18, 2003.

Edward Schultz,

Acting Director, Procurement and Grants Office, Centers for Disease Control and Prevention.

[FR Doc. 03–31840 Filed 12–24–03; 8:45 am]

BILLING CODE 4163–18–P

DEPARTMENT OF HEALTH AND HUMAN SERVICES

Centers for Disease Control and Prevention

Disease, Disability, and Injury Prevention and Control Special Emphasis Panel (SEP): Competitive Funds for National Programs to Improve the Health, Education, and Well-Being of Young People, Program Announcement Number 04010

In accordance with Section 10(a)(2) of the Federal Advisory Committee Act (Pub. L. 92–463), the Centers for Disease Control and Prevention (CDC) announces the following meeting:

Name: Disease, Disability, and Injury Prevention and Control Special Emphasis Panel (SEP): Competitive Funds for National Programs to Improve the Health, Education, and Well-Being of Young People, Program Announcement Number 04010.

Times and Dates: 8 a.m.–8:30 a.m., January 27, 2004 (Open), 8:30 a.m.–4:30 p.m., January 27, 2004 (Closed), 8:30 a.m.–4:30 p.m., January 28, 2004 (Closed).

Place: The Westin Atlanta North at Perimeter Center, 7 Concourse Parkway, Atlanta, GA 30328, Telephone 770.395.3900.

Status: Portions of the meeting will be closed to the public in accordance with provisions set forth in section 552b(c)(4) and (6), Title 5 U.S.C., and the Determination of the Director, Management Analysis and Services Office, CDC, pursuant to Public Law 92–463.

Matters to be Discussed: The meeting will include the review, discussion, and evaluation of applications received in response to Program Announcement Number 04010.

FOR FURTHER INFORMATION CONTACT: Nosrat Irannejad, MPH, Lead Education Program Specialist, National Center for Chronic Disease Prevention and Health Promotion, 4770 Buford Highway, MS–K31, Atlanta, GA 30341, Telephone 770.488.6124.

The Director, Management Analysis and Services Office, has been delegated the authority to sign **Federal Register** notices pertaining to announcements of meetings and other committee

management activities, for both CDC and the Agency for Toxic Substances and Disease Registry.

Dated: December 19, 2003.

Diane C. Allen,

Acting Director, Management Analysis and Services Office, Centers for Disease Control and Prevention.

[FR Doc. 03–31832 Filed 12–24–03; 8:45 am]

BILLING CODE 4163–18–P

DEPARTMENT OF HEALTH AND HUMAN SERVICES

Centers for Disease Control and Prevention

Board of Scientific Counselors, National Center for Health Statistics (BSC, NCHS)

In accordance with section 10(a)(2) of the Federal Advisory Committee Act (Pub. L. 92–463), the Centers for Disease Control and Prevention (CDC), National Center for Health Statistics (NCHS) announces the following committee meeting.

Name: Board of Scientific Counselors, NCHS.

Times and Dates: 2 p.m.–5:40 p.m., January 22, 2004.

8:30 a.m.–3:15 p.m., January 23, 2004.

Place: National Center for Health Statistics, Conference Rooms 1430A and 1405B, 3311 Toledo Road, Hyattsville, Maryland 20782.

Status: Open to the public, limited only by the space available. The meeting room accommodates approximately 100 people.

Purpose: This committee is charged with providing advice and making recommendations to the Secretary; the Director, CDC; and the Director, NCHS, regarding the scientific and technical program goals and objectives, strategies, and priorities of NCHS.

Matters to be Discussed: The agenda will include welcome remarks by the Director, NCHS; introductions of members and key NCHS staff; scientific presentations and discussions; and an open session for comments from the public.

Requests to make an oral presentation should be submitted in writing to the contact person listed below by close of business January 12, 2004. All requests to make oral comments should contain the name, address, telephone number, and organizational affiliation of the presenter.

Written comments should not exceed five single-spaced typed pages in length and should be received by the contact person listed below by close of business, January 12, 2004.

Agenda items are subject to change as priorities dictate.

FOR FURTHER INFORMATION CONTACT: Linda Blankenbaker, Executive Secretary, National Center for Health Statistics, Office of the Director, 3311 Toledo Road, Room 7204, Hyattsville, Maryland 20782, telephone (301) 458–4500, fax (301) 458–4020.

The Director, Management Analysis and Services Office, has been delegated the authority to sign **Federal Register** notices pertaining to announcements of meetings and other committee management activities for both CDC and the Agency for Toxic Substances and Disease Registry.

Dated: December 18, 2003.

Alvin Hall,

Director, Management Analysis and Services Office, Centers for Disease Control and Prevention.

[FR Doc. 03–31841 Filed 12–24–03; 8:45 am]

BILLING CODE 4163–18–P

DEPARTMENT OF HEALTH AND HUMAN SERVICES

National Institutes of Health

National Heart, Lung, and Blood Institute; Notice of Closed Meeting

Pursuant to section 10(d) of the Federal Advisory Committee Act, as amended (5 U.S.C. Appendix 2), notice is hereby given of the following meeting.

The meeting will be closed to the public in accordance with the provisions set forth in sections 552b(c)(4) and 552b(c)(6), Title 5 U.S.C., as amended. The grant applications and the discussions could disclose confidential trade secrets or commercial property such as patentable material, and personal information concerning individuals associated with the grant applications, the disclosure of which would constitute a clearly unwarranted invasion of personal privacy.

Name of Committee: National Heart, Lung, and Blood Institute Special Emphasis Panel, review of Mentored Clinical Scientist Development Awards (K08s).

Date: March 4–5, 2004.

Time: 7:30 p.m. to 3 p.m.

Agenda: To review and evaluate grant applications.

Place: Hyatt Regency Bethesda, One Bethesda Metro Center, 7400 Wisconsin Avenue, Bethesda, MD 20814.

Contact Person: Roy L. White, PhD, Review Branch, Division of Extramural Affairs, National Heart, Lung, and Blood Institute, National Institutes of Health, 6701 Rockledge Drive, Room 7192, MSC 7924, Bethesda, MD 20892, 301–435–02897.

(Catalogue of Federal Domestic Assistance Program Nos. 93.233, National Center for Sleep Disorders Research; 93.837, Heart and Vascular Diseases Research; 93.838, Lung Diseases Research; 93.839, Blood Diseases and Resources Research, National Institutes of Health, HHS)

Dated: December 19, 2003.

LaVerne Y. Stringfield,

Director, Office of Federal Advisory Committee Policy.

[FR Doc. 03–31910 Filed 12–24–03; 8:45 am]

BILLING CODE 4140–01–M

DEPARTMENT OF HEALTH AND HUMAN SERVICES

National Institutes of Health

National Institute on Drug Abuse; Notice of Closed Meeting

Pursuant to section 10(d) of the Federal Advisory Committee Act, as amended (5 U.S.C. Appendix 2), notice is hereby given of the following meeting.

The meeting will be closed to the public in accordance with the provisions set forth in sections 552b(c)(4) and 552b(c)(6), Title 5 U.S.C., as amended. The contract proposals and the discussions could disclose confidential trade secrets or commercial property such as patentable material, and personal information concerning individuals associated with the contract proposals, the disclosure of which would constitute a clearly unwarranted invasion of personal privacy.

Name of Committee: National Institute on Drug Abuse Special Emphasis Panel, ''National Hispanic Science Network on Drug Abuse''.

Date: January 13, 2004.

Time: 10 a.m. to 12 p.m.

Agenda: To review and evaluate contract proposals.

Place: National Institutes of Health, 6101 Executive Boulevard, Rockville, MD 20852, (Telephone Conference Call).

Contact Person: Lyle Furr, Contract Review Specialist, Office of Extramural Affairs, National Institute on Drug Abuse, NIH, DHHS, Room 220, MSC 8401, 6101 Executive Boulevard, Bethesda, MD 20892–8401, (301) 435–1439.

(Catalogue of Federal Domestic Assistance Program Nos. 93.277, Drug Abuse Scientist Development Award for Clinicians, Scientist Development Awards, and Research Scientist Awards; 93.278, Drug Abuse National Research Service Awards for Research Training; 93.279, Drug Abuse Research Programs, National Institutes of Health, HHS)

Dated: December 18, 2003.

LaVerne Y. Stringfield,

Director, Office of Federal Advisory Committee Policy.

[FR Doc. 03–31799 Filed 12–24–03; 8:45 am]

BILLING CODE 4140–01–M

DEPARTMENT OF HEALTH AND HUMAN SERVICES

National Institutes of Health

National Institute of Child Health and Human Development, Notice of Closed Meeting

Pursuant to section 10(d) of the Federal Advisory Committee Act, as amended (5 U.S.C. Appendix 2), notice is hereby given of the following meeting.

The meeting will be closed to the public in accordance with the provisions set forth in sections 552b(c)(4) and 552b(c)(6), Title 5 U.S.C., as amended. The contract proposals and the discussions could disclose confidential trade secrets or commercial property such as patentable material, and personal information concerning individuals associated with the contract proposals, the disclosure of which would constitute a clearly unwarranted invasion of personal privacy.

Name of Committee: National Institute of Child Health and Human Development Special Emphasis Panel, Pediatric Off-Patient Drug Study (PODS) Center-Sodium Nitroprusside.

Date: January 28, 2004.

Time: 8 a.m. to 12:30 p.m.

Agenda: To review and evaluate contract proposals.

Place: Hyatt Regency Bethesda, One Bethesda Metro Center, 7400 Wisconsin Avenue, Bethesda, MD 20814.

Contact Person: Kishena C. Wadhwani, PhD, MPH, Scientific Review Administrator, Division of Scientific Review, 9000 Rockville Pike, MSC 7510, 6100 Building, Room 5B01, Bethesda, MD 20892–7510, (301) 496–1485, *wadhwank@mail.nih.gov.*

(Catalogue of Federal Domestic Assistance Program Nos. 93.864, Population Research; 93.865, Research for Mothers and Children; 93.929, Center for Medical Rehabilitation Research; 93.209, Contraception and Infertility Loan Repayment Program, National Institutes of Health, HHS)

Dated: December 18, 2003.

LaVerne Y. Stringfield,

Director, Office of Federal Advisory Committee Policy.

[FR Doc. 03–31800 Filed 12–24–03; 8:45 am]

BILLING CODE 4140–01–M

DEPARTMENT OF HOUSING AND URBAN DEVELOPMENT

[Docket No. FR–4809–N–52]

Federal Property Suitable as Facilities To Assist the Homeless

AGENCY: Office of the Assistant Secretary for Community Planning and Development, HUD.

ACTION: Notice.

SUMMARY: This Notice identifies unutilized, underutilized, excess, and surplus Federal property reviewed by HUD for suitability for possible use to assist the homeless.

EFFECTIVE DATE: December 29, 2003.

FOR FURTHER INFORMATION CONTACT: Mark Johnston, Department of Housing and Urban Development, Room 7262, 451 Seventh Street, SW., Washington, DC 20410; telephone (202) 708–1234; TTY number for the hearing- and speech-impaired (202) 708–2565 (these telephone numbers are not toll-free), or call the toll-free Title V information line at 1–800–927–7588.

SUPPLEMENTARY INFORMATION: In accordance with the December 12, 1988, court order in *National Coalition for the Homeless* v. *Veterans Administration*, No. 88–2503–OG (D.D.C.), HUD publishes a Notice, on a weekly basis, identifying unutilized, underutilized, excess and surplus Federal buildings and real property that HUD has reviewed for suitability for use to assist the homeless. Today's Notice is for the purpose of announcing that no additional properties have been determined suitable or unsuitable this week.

Dated: December 18, 2003.

John D. Garrity,

Director, Office of Special Needs Assistance Programs.

[FR Doc. 03–31757 Filed 12–24–03; 8:45 am]

BILLING CODE 4210–29–M

DEPARTMENT OF THE INTERIOR

Office of the Secretary

Exxon Valdez Oil Spill Trustee Council; Notice of Meeting

AGENCY: Office of the Secretary, Department of the Interior.

ACTION: Notice of meeting.

SUMMARY: The Department of the Interior, Office of the Secretary is announcing a public meeting of the *Exxon Valdez* Oil Spill Public Advisory Committee.

DATES: January 15, 2004, at 8:45 a.m.

ADDRESSES: Captain Cook Hotel, 4th Avenue and K Street, Anchorage, Alaska.

FOR FURTHER INFORMATION CONTACT: Douglas Mutter, Department of the Interior, Office of Environmental Policy and Compliance, 1689 ''C'' Street, Suite 119, Anchorage, Alaska, 99501, (907) 271–5011.

SUPPLEMENTARY INFORMATION: The Public Advisory Committee was created by Paragraph V.A.4 of the Memorandum of Agreement and Consent Decree entered into by the United States of America and the State of Alaska on August 27, 1991, and approved by the United States District Court for the District of Alaska in settlement of *United States of America* v. *State of Alaska,* Civil Action No. A91–081 CV. The meeting agenda will feature discussions about the small parcel habitat program and the Fiscal Year 2005 annual work plan.

Willie R. Taylor,

Director, Office of Environmental Policy and Compliance.

[FR Doc. 03–31780 Filed 12–24–03; 8:45 am]

BILLING CODE 4310–RG–P

DEPARTMENT OF THE INTERIOR

Fish and Wildlife Service

Service Regulations Committee Meeting

AGENCY: Fish and Wildlife Service, Interior.

ACTION: Notice of meeting.

SUMMARY: The Fish and Wildlife Service (hereinafter Service) will conduct an open meeting on January 29, 2004, to identify and discuss preliminary issues concerning the 2004–05 migratory bird hunting regulations.

DATES: The meeting will be held January 29, 2004.

ADDRESSES: The Service Regulations Committee will meet at the Arlington Square Building, U.S. Fish and Wildlife Service, 4401 North Fairfax Drive, Room 200 A/B, Arlington, Virginia.

FOR FURTHER INFORMATION CONTACT: Brian Millsap, Chief, Division of Migratory Bird Management, U.S. Fish and Wildlife Service, Department of the Interior, ms MBSP–4107–ARLSQ, 1849 C Street, NW., Washington, DC 20240, (703) 358–1714.

SUPPLEMENTARY INFORMATION: Representatives from the Service, the Service's Migratory Bird Regulations Committee, and Flyway Council Consultants will meet on January 29, 2004, at 8:30 a.m. to identify

preliminary issues concerning the 2004–05 migratory bird hunting regulations for discussion and review by the Flyway Councils at their March meetings.

In accordance with Departmental policy regarding meetings of the Service Regulations Committee attended by any person outside the Department, these meetings are open to public observation. Members of the public may submit written comments on the matters discussed to the Director.

Dated: December 2, 2003.

Paul R. Schmidt,

Assistant Director, Migratory Birds and State Programs, U.S. Fish and Wildlife Service.

[FR Doc. 03–31852 Filed 12–24–03; 8:45 am]

BILLING CODE 4310–55–P

DEPARTMENT OF THE INTERIOR

Bureau of Land Management

[CO–03–840–1610–241A]

Canyons of the Ancients National Monument Advisory Committee Meeting

AGENCY: Bureau of Land Management, Interior.

ACTION: Notice of meeting.

SUMMARY: In accordance with the Federal Land Policy and Management Act (FLPMA) and the Federal Advisory Committee Act of 1972 (FACA), the U.S. Department of the Interior, Bureau of Land Management (BLM) Canyons of the Ancients National Monument (Monument) Advisory Committee (Committee), will meet as directed below.

DATES: Meetings will be held January 27th, February 17th, March 9th, March 30th, and April 13th, 2004 at the Anasazi Heritage Center in Dolores, Colorado at 9 a.m. The public comment period for each meeting will begin at approximately 2:30 p.m. and the meetings will adjourn at approximately 3:30 p.m.

FOR FURTHER INFORMATION CONTACT: LouAnn Jacobson, Monument Manager or Stephen Kandell, Monument Planner, Anasazi Heritage Center, 27501 Hwy 184, Dolores, Colorado 81323; Telephone (970) 882–5600.

SUPPLEMENTARY INFORMATION: The eleven member committee provides counsel and advice to the Secretary of the Interior, through the BLM, concerning development and implementation of a management plan developed in accordance with FLMPA, for public lands within the Monument. At these meetings, topics we plan to discuss include planning issues and management concerns, planning alternatives, partnerships, science and other issues as appropriate.

All meetings will be open to the public and will include a time set aside for public comment. Interested persons may make oral statements at the meetings or submit written statements at any meeting. Per-person time limits for oral statements may be set to allow all interested persons an opportunity to speak.

Summary minutes of all Committee meetings will be maintained at the Anasazi Heritage Center in Dolores, Colorado. They are available for public inspection and reproduction during regular business hours within thirty (30) days of the meeting. In addition, minutes and other information concerning the Committee can be obtained from the Monument planning Web site at: *http://www.blm.gov/rmp/canm* which will be updated following each Committee meeting.

Dated: December 18, 2003.

Stephen J. Kandell,

Acting Manager, Canyons of the Ancients National Monument.

[FR Doc. 03–31842 Filed 12–24–03; 8:45 am]

BILLING CODE 4310–AG–P

DEPARTMENT OF THE INTERIOR

Bureau of Land Management

[NV–930–1430–ET; NVN–77880; 4–08807]

Notice of Proposed Withdrawal and Opportunity for Public Meeting; Nevada

AGENCY: Bureau of Land Management, Interior.

ACTION: Notice.

SUMMARY: The Bureau of Land Management has received a request from the Department of Energy to withdraw 308,600 acres of public land from surface entry and mining for a period of 20 years to evaluate the land for the potential construction, operation, and maintenance of a branch rail line for the transportation of spent nuclear fuel and high-level radioactive waste in the event the Nuclear Regulatory Commission authorizes a geologic repository at Yucca Mountain as provided for under the Nuclear Waste Policy Act of 1982, as amended. This notice segregates the land from surface entry and mining for up to 2 years while various studies and analyses are made to support a final decision on the withdrawal application.

DATES: Comments and requests for a meeting should be received on or before March 29, 2004.

ADDRESSES: Comments and meeting requests should be sent to the Nevada State Director, BLM, 1340 Financial Blvd., PO Box 12000, Reno, Nevada 89520–0006.

FOR FURTHER INFORMATION CONTACT: Dennis J. Samuelson, BLM Nevada State Office, 775–861–6532.

SUPPLEMENTARY INFORMATION: The Department of Energy has filed an application (NVN 77880) to withdraw the following described public land from settlement, sale, location, or entry under the general land laws, including the mining laws and the mineral leasing laws, subject to valid existing rights:

Mount Diablo Meridian

A corridor one mile in width that contains a portion of, or are wholly encompassed within, the following sections:

10S 46E 01	1N 55E 24	2N 58E 03	3N 48E 35	4N 49.2E 35
10S 46E 02	1N 55E 25	2N 58E 04	3N 48E 36	4N 49.2E 36
10S 46E 12	1N 55E 26	2N 58E 05	3N 49E 02	4N 49E 24
10S 46E 13	1N 55E 27	2N 58E 07	3N 49E 03	4N 49E 25
10S 47E 06	1N 55E 28	2N 58E 08	3N 49E 04	4N 49E 26
10S 47E 07	1N 55E 29	2N 58E 09	3N 49E 05	4N 49E 33
10S 47E 08	1N 55E 30	2N 58E 13	3N 49E 07	4N 49E 34
10S 47E 09	1N 55E 31	2N 58E 17	3N 49E 08	4N 49E 35
10S 47E 15	1N 55E 32	2N 58E 18	3N 49E 09	4N 49E 36
10S 47E 16	1N 55E 33	2N 58E 19	3N 49E 10	4N 50E 30
10S 47E 17	1N 56E 01	2N 58E 20	3N 49E 17	4N 50E 31
10S 47E 18	1N 56E 02	2N 58E 21	3N 49E 18	4N 50E 32

10S 47E 21	1N 56E 09	2N 58E 22	3N 49E 19	4N 60E 20
10S 47E 22	1N 56E 10	2N 58E 23	3N 50E 02	4N 60E 21
10S 47E 23	1N 56E 11	2N 58E 24	3N 50E 03	4N 60E 22
10S 47E 26	1N 56E 12	2N 58E 25	3N 50E 04	4N 60E 23
10S 47E 27	1N 56E 13	2N 58E 26	3N 50E 10	4N 60E 24
10S 47E 28	1N 56E 14	2N 58E 27	3N 50E 11	4N 60E 25
10S 47E 34	1N 56E 15	2N 58E 28	3N 50E 14	4N 60E 26
10S 47E 35	1N 56E 16	2N 58E 29	3N 50E 15	4N 60E 27
11S 47E 01	1N 56E 17	2N 58E 30	3N 50E 22	4N 60E 28
11S 47E 02	1N 56E 18	2N 58E 31	3N 50E 23	4N 60E 29
11S 47E 03	1N 56E 19	2N 58E 32	3N 50E 24	4N 60E 31
11S 47E 11	1N 56E 20	2N 59E 02	3N 50E 25	4N 60E 32
11S 47E 12	1N 56E 21	2N 59E 03	3N 50E 26	4N 60E 33
11S 47E 13	1N 57E 03	2N 59E 04	3N 50E 35	4N 61E 19
11S 47E 14	1N 57E 04	2N 59E 08	3N 50E 36	4N 61E 20
11S 47E 24	1N 57E 05	2N 59E 09	3N 58E 24	4N 61E 28
11S 47E 25	1N 57E 06	2N 59E 10	3N 58E 25	4N 61E 29
11S 48E 07	1N 62E 01	2N 59E 16	3N 58E 26	4N 61E 30
11S 48E 08	1N 62E 12	2N 59E 17	3N 58E 33	4N 61E 32
11S 48E 09	1N 63E 06	2N 59E 18	3N 58E 34	4N 61E 33
11S 48E 10	1N 63E 07	2N 59E 19	3N 58E 35	4N 61E 34
11S 48E 11	1N 63E 08	2N 59E 20	3N 58E 36	4S 43E 01
11S 48E 14	1N 63E 17	2N 60E 01	3N 59E 12	4S 43E 02
11S 48E 15	1N 63E 18	2N 61E 06	3N 59E 13	4S 43E 03
11S 48E 16	1N 63E 19	2N 62E 01	3N 59E 14	4S 43E 10
11S 48E 17	1N 63E 20	2N 62E 02	3N 59E 19	4S 43E 11
11S 48E 18	1N 63E 21	2N 62E 03	3N 59E 20	4S 43E 12
11S 48E 19	1N 63E 26	2N 62E 04	3N 59E 21	4S 43E 14
11S 48E 20	1N 63E 27	2N 62E 05	3N 59E 22	4S 43E 15
11S 48E 21	1N 63E 28	2N 62E 10	3N 59E 23	4S 43E 22
11S 48E 22	1N 63E 29	2N 62E 11	3N 59E 24	4S 43E 23
11S 48E 27	1N 63E 30	2N 62E 12	3N 59E 25	4S 43E 26
11S 48E 28	1N 63E 32	2N 62E 13	3N 59E 26	4S 43E 27
11S 48E 29	1N 63E 33	2N 62E 14	3N 59E 27	4S 43E 28
11S 48E 30	1N 63E 34	2N 62E 15	3N 59E 28	4S 43E 33
11S 48E 31	1N 63E 35	2N 62E 24	3N 59E 29	4S 43E 34
11S 48E 32	1S 43E 01	2N 62E 25	3N 59E 30	4S 67E 01
11S 48E 33	1S 43E 02	2N 62E 36	3N 59E 33	4S 67E 02
11S 48E 34	1S 43E 03	2N 63E 07	3N 59E 34	4S 67E 04
12S 48E 02	1S 43E 04	2N 63E 18	3N 59E 35	4S 67E 05
12S 48E 03	1S 43E 09	2N 63E 19	3N 59E 36	4S 67E 06
12S 48E 04	1S 43E 10	2N 63E 30	3N 60E 05	4S 67E 07
12S 48E 05	1S 43E 11	2N 63E 31	3N 60E 06	4S 67E 08
12S 48E 06	1S 43E 12	2S 43E 03	3N 60E 07	4S 67E 09
12S 48E 09	1S 43E 13	2S 43E 04	3N 60E 08	4S 67E 12
12S 48E 10	1S 43E 14	2S 43E 09	3N 60E 18	4S 68E 06
12S 48E 11	1S 43E 15	2S 43E 10	3N 60E 19	4S 68E 07
12S 48E 13	1S 43E 16	2S 43E 15	3N 60E 20	4S 68E 08
12S 48E 14	1S 43E 21	2S 43E 16	3N 60E 21	4S 68E 17
12S 48E 15	1S 43E 22	2S 43E 20	3N 60E 22	4S 68E 18
12S 48E 23	1S 43E 23	2S 43E 21	3N 60E 25	5S 43E 03
12S 48E 24	1S 43E 24	2S 43E 22	3N 60E 26	5S 43E 04
12S 48E 25	1S 43E 25	2S 43E 27	3N 60E 27	5S 43E 05
12S 48E 26	1S 43E 27	2S 43E 28	3N 60E 28	5S 43E 08
12S 48E 35	1S 43E 28	2S 43E 29	3N 60E 29	5S 43E 09
12S 48E 36	1S 43E 33	2S 43E 32	3N 60E 30	5S 43E 15
12S 49E 31	1S 43E 34	2S 43E 33	3N 60E 31	5S 43E 16
13S 48E 09	1S 44E 18	2S 43E 34	3N 60E 34	5S 43E 17
13S 48E 10	1S 44E 19	2S 43E 35	3N 60E 35	5S 43E 21
13S 48E 14	1S 44E 29	2S 43E 36	3N 60E 36	5S 43E 22
13S 48E 15	1S 44E 30	2S 44E 04	3N 61E 02	5S 43E 27
13S 48E 16	1S 44E 31	2S 44E 05	3N 61E 03	5S 43E 28
13S 48E 22	1S 44E 32	2S 44E 06	3N 61E 04	5S 43E 33
13S 48E 23	1S 51.2E 06	2S 44E 08	3N 61E 09	5S 43E 34
13S 48E 24	1S 51.2E 07	2S 44E 09	3N 61E 10	5S 43E 35
13S 48E 25	1S 51.2E 08	2S 44E 16	3N 61E 11	6S 43E 01
13S 48E 26	1S 51.2E 17	2S 44E 17	3N 61E 12	6S 43E 02
13S 48E 36	1S 51.2E 18	2S 44E 20	3N 61E 13	6S 43E 03
13S 49E 13	1S 51.2E 19	2S 44E 21	3N 61E 14	6S 43E 10
13S 49E 14	1S 51.2E 20	2S 44E 22	3N 61E 22	6S 43E 11
13S 49E 19	1S 51.2E 28	2S 44E 27	3N 61E 23	6S 43E 12
13S 49E 22	1S 51.2E 29	2S 44E 28	3N 61E 24	6S 43E 13
13S 49E 23	1S 51.2E 30	2S 44E 32	3N 61E 25	6S 43E 14
13S 49E 24	1S 51.2E 31	2S 44E 33	3N 61E 26	6S 43E 15
13S 49E 25	1S 51.2E 32	2S 44E 34	3N 61E 27	6S 43E 23
13S 49E 26	1S 51.2E 33	2S 51.2E 04	3N 61E 28	6S 43E 24

13S 49E 27	1S 51E 01	2S 51.2E 05	3N 61E 29	6S 43E 25
13S 49E 29	1S 51E 02	2S 51.2E 06	3N 61E 30	6S 43E 26
13S 49E 30	1S 51E 03	2S 51.2E 07	3N 61E 31	6S 43E 27
13S 49E 31	1S 51E 10	2S 51.2E 08	3N 61E 32	6S 43E 34
13S 49E 32	1S 51E 11	2S 51.2E 09	3N 61E 33	6S 43E 35
13S 49E 33	1S 51E 12	2S 51.2E 16	3N 61E 34	6S 43E 36
13S 49E 34	1S 51E 13	2S 51.2E 17	3N 61E 35	6S 44E 06
13S 49E 35	1S 51E 14	2S 51.2E 18	3N 61E 36	6S 44E 07
13S 49E 36	1S 51E 24	2S 51.2E 20	3N 62E 18	6S 44E 08
13S 50E 30	1S 51E 25	2S 51.2E 21	3N 62E 19	6S 44E 15
13S 50E 31	1S 51E 36	2S 51E 01	3N 62E 20	6S 44E 16
14S 49E 01	1S 52E 31	2S 51E 12	3N 62E 28	6S 44E 17
14S 49E 02	1S 53E 25	2S 52E 06	3N 62E 29	6S 44E 18
14S 49E 03	1S 53E 35	2S 52E 07	3N 62E 30	6S 44E 20
14S 49E 04	1S 53E 36	2S 52E 08	3N 62E 31	6S 44E 21
14S 49E 05	1S 54E 01	2S 52E 11	3N 62E 32	6S 44E 22
14S 49E 08	1S 54E 10	2S 52E 12	3N 62E 33	6S 44E 27
14S 49E 09	1S 54E 11	2S 52E 13	3N 62E 34	6S 44E 28
14S 49E 10	1S 54E 12	2S 52E 14	3N 62E 35	6S 44E 31
14S 49E 11	1S 54E 13	2S 52E 15	3S 43E 01	6S 44E 33
14S 49E 12	1S 54E 14	2S 52E 16	3S 43E 02	6S 44E 34
14S 49E 15	1S 54E 15	2S 52E 17	3S 43E 03	7S 43E 01
14S 49E 16	1S 54E 16	2S 52E 18	3S 43E 04	7S 43E 02
14S 50E 06	1S 54E 20	2S 52E 19	3S 43E 10	7S 43E 03
1N 43E 23	1S 54E 21	2S 52E 20	3S 43E 11	7S 43E 11
1N 43E 24	1S 54E 22	2S 52E 21	3S 43E 12	7S 43E 12
1N 43E 25	1S 54E 23	2S 52E 22	3S 43E 13	7S 43E 13
1N 43E 26	1S 54E 28	2S 52E 23	3S 43E 14	7S 43E 14
1N 43E 27	1S 54E 29	2S 53E 01	3S 43E 15	7S 43E 24
1N 43E 34	1S 54E 30	2S 53E 02	3S 43E 22	7S 43E 25
1N 43E 35	1S 54E 31	2S 53E 03	3S 43E 23	7S 44E 03
1N 43E 36	1S 55E 05	2S 53E 07	3S 43E 24	7S 44E 04
1N 44E 19	1S 55E 06	2S 53E 08	3S 43E 25	7S 44E 05
1N 44E 20	1S 55E 07	2S 53E 09	3S 43E 26	7S 44E 06
1N 44E 21	1S 63E 01	2S 53E 10	3S 43E 27	7S 44E 07
1N 44E 22	1S 63E 02	2S 53E 11	3S 43E 34	7S 44E 08
1N 44E 23	1S 63E 11	2S 53E 15	3S 43E 35	7S 44E 09
1N 44E 24	1S 63E 12	2S 53E 16	3S 43E 36	7S 44E 10
1N 44E 25	1S 63E 13	2S 53E 17	3S 44E 04	7S 44E 14
1N 44E 26	1S 64E 07	2S 53E 18	3S 44E 05	7S 44E 15
1N 44E 27	1S 64E 15	2S 65E 01	3S 44E 07	7S 44E 16
1N 44E 28	1S 64E 16	2S 65E 02	3S 44E 08	7S 44E 17
1N 44E 29	1S 64E 17	2S 65E 03	3S 44E 09	7S 44E 18
1N 44E 30	1S 64E 18	2S 65E 11	3S 44E 17	7S 44E 19
1N 45E 19	1S 64E 19	2S 65E 12	3S 44E 18	7S 44E 21
1N 45E 20	1S 64E 20	2S 65E 13	3S 44E 19	7S 44E 22
1N 45E 25	1S 64E 21	2S 65E 14	3S 44E 20	7S 44E 23
1N 45E 26	1S 64E 22	2S 66E 01	3S 44E 30	7S 44E 25
1N 45E 27	1S 64E 23	2S 66E 02	3S 44E 31	7S 44E 26
1N 45E 28	1S 64E 24	2S 66E 03	3S 67E 01	7S 44E 27
1N 45E 29	1S 64E 25	2S 66E 04	3S 67E 02	7S 44E 29
1N 45E 30	1S 64E 26	2S 66E 05	3S 67E 03	7S 44E 30
1N 45E 32	1S 64E 27	2S 66E 07	3S 67E 10	7S 44E 31
1N 45E 33	1S 65E 19	2S 66E 08	3S 67E 11	7S 44E 32
1N 45E 34	1S 65E 20	2S 66E 09	3S 67E 12	7S 44E 33
1N 45E 35	1S 65E 27	2S 66E 10	3S 67E 13	7S 44E 35
1N 45E 36	1S 65E 28	2S 66E 11	3S 67E 14	7S 44E 36
1N 46E 25	1S 65E 29	2S 66E 12	3S 67E 15	8S 44E 01
1N 46E 26	1S 65E 30	2S 66E 13	3S 67E 16	8S 44E 02
1N 46E 27	1S 65E 32	2S 66E 14	3S 67E 21	8S 44E 03
1N 46E 28	1S 65E 33	2S 66E 16	3S 67E 22	8S 44E 04
1N 46E 29	1S 65E 34	2S 66E 17	3S 67E 23	8S 44E 05
1N 46E 30	1S 65E 35	2S 66E 18	3S 67E 24	8S 44E 09
1N 46E 31	2N 47E 25	2S 66E 20	3S 67E 25	8S 44E 10
1N 46E 32	2N 47E 35	2S 66E 24	3S 67E 27	8S 44E 11
1N 46E 33	2N 47E 36	2S 67E 07	3S 67E 28	8S 44E 12
1N 46E 34	2N 48E 02	2S 67E 08	3S 67E 29	8S 44E 13
1N 46E 35	2N 48E 03	2S 67E 09	3S 67E 32	8S 44E 14
1N 46E 36	2N 48E 04	2S 67E 14	3S 67E 33	8S 44E 15
1N 47E 01	2N 48E 08	2S 67E 15	3S 67E 35	8S 44E 16
1N 47E 02	2N 48E 09	2S 67E 16	3S 67E 36	8S 44E 22
1N 47E 03	2N 48E 10	2S 67E 17	3S 68E 01	8S 44E 23
1N 47E 10	2N 48E 16	2S 67E 18	3S 68E 12	8S 44E 24
1N 47E 11	2N 48E 17	2S 67E 19	3S 68E 19	8S 44E 25
1N 47E 12	2N 48E 18	2S 67E 20	3S 68E 30	8S 44E 26
1N 47E 14	2N 48E 19	2S 67E 21	3S 68E 31	8S 44E 36

1N 47E 15	2N 48E 20	2S 67E 22	3S 69E 03	8S 45E 06
1N 47E 16	2N 48E 21	2S 67E 23	3S 69E 04	8S 45E 07
1N 47E 20	2N 48E 29	2S 67E 24	3S 69E 05	8S 45E 18
1N 47E 21	2N 48E 30	2S 67E 25	3S 69E 06	8S 45E 19
1N 47E 22	2N 48E 31	2S 67E 26	3S 69E 07	8S 45E 20
1N 47E 28	2N 50E 01	2S 67E 29	3S 69E 08	8S 45E 28
1N 47E 29	2N 50E 02	2S 67E 30	3S 69E 09	8S 45E 29
1N 47E 30	2N 50E 11	2S 67E 35	3S 69E 10	8S 45E 30
1N 47E 31	2N 50E 12	2S 67E 36	3S 69E 11	8S 45E 31
1N 47E 32	2N 50E 13	2S 68E 19	3S 69E 13	8S 45E 32
1N 50E 01	2N 50E 14	2S 68E 23	3S 69E 14	8S 45E 33
1N 50E 12	2N 50E 24	2S 68E 25	3S 69E 15	9S 45E 02
1N 51E 05	2N 50E 25	2S 68E 26	3S 69E 22	9S 45E 03
1N 51E 06	2N 50E 36	2S 68E 27	3S 69E 23	9S 45E 04
1N 51E 07	2N 51E 18	2S 68E 28	3S 69E 24	9S 45E 05
1N 51E 08	2N 51E 19	2S 68E 29	3S 69E 25	9S 45E 06
1N 51E 16	2N 51E 30	2S 68E 30	3S 70E 08	9S 45E 09
1N 51E 17	2N 51E 31	2S 68E 31	3S 70E 09	9S 45E 10
1N 51E 18	2N 56E 36	2S 68E 32	3S 70E 10	9S 45E 11
1N 51E 19	2N 57E 13	2S 68E 33	3S 70E 11	9S 45E 12
1N 51E 20	2N 57E 14	2S 68E 34	3S 70E 12	9S 45E 13
1N 51E 21	2N 57E 22	2S 68E 35	3S 70E 13	9S 45E 14
1N 51E 22	2N 57E 23	2S 68E 36	3S 70E 14	9S 45E 24
1N 51E 26	2N 57E 24	2S 69E 30	3S 70E 15	9S 46E 07
1N 51E 27	2N 57E 25	2S 69E 31	3S 70E 16	9S 46E 17
1N 51E 28	2N 57E 26	2S 69E 32	3S 70E 17	9S 46E 18
1N 51E 29	2N 57E 27	2S 69E 33	3S 70E 18	9S 46E 19
1N 51E 33	2N 57E 28	3.2N 50E 33	3S 70E 19	9S 46E 20
1N 51E 34	2N 57E 29	3.2N 50E 34	3S 70E 20	9S 46E 21
1N 51E 35	2N 57E 31	3N 48E 13	3S 70E 22	9S 46E 22
1N 51E 36	2N 57E 32	3N 48E 23	3S 70E 23	9S 46E 26
1N 55E 13	2N 57E 33	3N 48E 24	3S 70E 24	9S 46E 27
1N 55E 14	2N 57E 34	3N 48E 25	4N 49.2E 25	9S 46E 28
1N 55E 21	2N 57E 35	3N 48E 26	4N 49.2E 26	9S 46E 29
1N 55E 22	2N 57E 36	3N 48E 27	4N 49.2E 27	9S 46E 33
1N 55E 23	2N 58E 02	3N 48E 34	4N 49.2E 34	9S 46E 34
				9S 46E 35
				9S 46E 36

The area described contains 308,600 acres in Clark, Esmeralda, Lincoln, and Nye Counties.

This withdrawal approximates the land encompassed by the Caliente rail corridor as described in the Department of Energy's Final Environmental Impact Statement for a Geologic Repository for the Disposal of Spent Nuclear Fuel and High-Level Radioactive Waste at Yucca Mountain, Nye County, Nevada, February 2002. The purpose of the withdrawal is to evaluate the land for the potential construction and operation of a branch rail line for the transportation of spent nuclear fuel and high-level radioactive waste in the event the Nuclear Regulatory Commission authorizes a geologic repository at Yucca Mountain as provided for under the Nuclear Waste Policy Act of 1982, as amended.

For a period of 90 days from the date of publication of this notice, all persons who wish to submit comments, suggestions, or objections in connection with the proposed withdrawal may present their views in writing to the Nevada State Director of the Bureau of Land Management.

Notice is hereby given that there will be at least one public meeting in connection with the proposed withdrawal to be announced at a later date. A notice of the time, place, and date will be published in the **Federal Register** and a local newspaper at least 30 days before the scheduled date of a meeting.

Comments, including names and street addresses of commenters, will be available for public review at the Nevada State Office, 1340 Financial Boulevard, Reno, Nevada, during regular business hours 7:30 a.m. to 4:30 p.m., Monday through Friday, except holidays. Individual respondents may request confidentiality. If you wish to hold your name or address from public review or from disclosure under the Freedom of Information Act, you must state this prominently at the beginning of your comments. Such requests will be honored to the extent allowed by law. All submissions from organizations or businesses will be made available for public inspection in their entirety.

The application will be processed in accordance with the regulations set forth in 43 CFR Part 2300.

For a period of 2 years from December 29, 2003, in accordance with 43 CFR 2310.2(a), the lands described in this notice will be segregated from surface entry and mining, unless the application is denied or canceled, or the withdrawal is approved prior to that date. Other uses which may be permitted during this segregative period are rights-of-way, leases, and permits as long as they do not conflict with the proposed withdrawal.

Dated: December 19, 2003.

Margaret L. Jensen,

Deputy State Director, Natural Resources, Lands, and Planning.

[FR Doc. 03–31901 Filed 12–24–03; 8:45 am]

BILLING CODE 4310–HC–P

DEPARTMENT OF THE INTERIOR

Minerals Management Service

Agency Information Collection Activities: Proposed Collection, Comment Request

AGENCY: Minerals Management Service (MMS), Interior.

ACTION: Notice of an extension of a currently approved information collection (OMB Control Number 1010–0110).

SUMMARY: To comply with the Paperwork Reduction Act (PRA) of 1995, we are inviting comments on a collection of information that we will submit to the Office of Management and Budget (OMB) for review and approval. The information collection request (ICR) is titled Training and Outreach Evaluation Forms.

DATES: Submit written comments on or before February 27, 2004.

ADDRESSES: Submit written comments to Sharron L. Gebhardt, Regulatory Specialist, Minerals Management Service, Minerals Revenue Management, P.O. Box 25165, MS 320B2, Denver, Colorado 80225. If you use an overnight courier service, our courier address is Building 85, Room A–614, Denver Federal Center, Denver, Colorado 80225. You may also e-mail your comments to us at *mrm.comments@mms.gov*. Include the title of the information collection and the OMB control number in the ''Attention'' line of your comment. Also include your name and return address. Submit electronic comments as an ASCII file avoiding the use of special characters and any form of encryption. If you do not receive a confirmation we have received your e-mail, contact Ms. Gebhardt at (303) 231–3211.

FOR FURTHER INFORMATION CONTACT: Sharron L. Gebhardt, telephone (303) 231–3211, FAX (303) 231–3781 or e-mail *sharron.gebhardt@mms.gov*.

SUPPLEMENTARY INFORMATION:

Title: Training and Outreach Evaluation Forms (Form MMS–4420A–H).

OMB Control Number: 1010–0110.

Bureau Form Number: Form MMS–4420A–H.

Abstract: The Secretary of the U.S. Department of the Interior (DOI) is responsible for collecting royalties from lessees who produce minerals from leased Federal and Indian lands. The Secretary is required by various laws to manage mineral resources production on Federal and Indian lands, collect the royalties due, and distribute the funds in accordance with those laws. The Secretary also has an Indian trust responsibility to manage Indian lands and seek advice and information from Indian beneficiaries. MMS performs the royalty management functions and assists the Secretary in carrying out the DOI Indian trust responsibility.

MMS provides training and outreach to our constituents to facilitate their compliance with laws and regulations and to ensure that constituents are well informed. We use training and outreach evaluation questionnaires to improve our training and outreach efforts and to assure its continued relevance. We present training sessions to the oil and gas and solid minerals reporters on various aspects of royalty reporting, production reporting, and valuation. We also provide outreach sessions to individual Indian minerals owners, Indian tribes, and the Bureau of Indian Affairs on Indian royalty management issues. Additionally, we provide training sessions to our financial and systems contractors and State and tribal auditors.

During the last few minutes of each training or outreach session, we ask participants to complete and return evaluation questionnaires. Participant response is voluntary. Some questions are uniform across all of the evaluation questionnaires; however, we also ask questions specific to each type of training or outreach or specific to our audiences.

No proprietary information will be submitted to MMS under this collection. No items of a sensitive nature are collected. The requirement to respond is voluntary.

Frequency of Response: On occasion.

Estimated Number and Description of Respondents: 1,750 industry representatives, State auditors, Indian auditors, Indian tribes, Indian allottees, MMS contractors, and MMS employees.

Estimated Annual Reporting and Recordkeeping ''Hour'' Burden: 175 hours.

Estimated Annual Reporting and Recordkeeping ''Non-hour Cost'' Burden: We have identified no ''non-hour cost'' burdens.

Comments: The PRA (44 U.S.C. 3501, *et seq.*) provides an agency may not conduct or sponsor, and a person is not required to respond to, a collection of information unless it displays a currently valid OMB control number. Before submitting an ICR to OMB, PRA Section 3506(c)(2)(A) requires each agency ''* * * to provide notice * * * and otherwise consult with members of the public and affected agencies concerning each proposed collection of information * * *.'' Agencies must specifically solicit comments to: (a) Evaluate whether the proposed collection of information is necessary for the agency to perform its duties, including whether the information is useful; (b) evaluate the accuracy of the agency's estimate of the burden of the proposed collection of information; (c) enhance the quality, usefulness, and clarity of the information to be collected; and (d) minimize the burden on the respondents, including the use of automated collection techniques or other forms of information technology.

The PRA also requires agencies to estimate the total annual reporting ''non-hour cost'' burden to respondents or recordkeepers resulting from the collection of information. We have not identified non-hour cost burdens for this information collection. If you have costs to generate, maintain, and disclose this information, you should comment and provide your total capital and startup cost components or annual operation, maintenance, and purchase of service components. You should describe the methods you use to estimate major cost factors, including system and technology acquisition, expected useful life of capital equipment, discount rate(s), and the period over which you incur costs. Capital and startup costs include, among other items, computers and software you purchase to prepare for collecting information; monitoring, sampling, and testing equipment; and record storage facilities. Generally, your estimates should not include equipment or services purchased: (i) Before October 1, 1995; (ii) to comply with requirements not associated with the information collection; (iii) for reasons other than to provide information or keep records for the Government; or (iv) as part of customary and usual business or private practices.

We will summarize written responses to this notice and address them in our ICR submission for OMB approval, including appropriate adjustments to the estimated burden. We will provide a copy of the ICR to you without charge upon request and the ICR will also be posted on our Web site at *http://www.mrm.mms.gov/Laws_R_D/FRNotices/FRInfColl.htm*.

Public Comment Policy: We will post all comments in response to this notice on our Web site at *http://www.mrm.mms.gov/Laws_R_D/FRNotices/FRInfColl.htm*. We will also make copies of the comments available for public review, including names and addresses of respondents, during regular business hours at our offices in Lakewood, Colorado. Individual respondents may request we withhold their home address from the public record, which we will honor to the extent allowable by law. There also may be circumstances in which we would withhold from the rulemaking record a respondent's identity, as allowable by law. If you request that we withhold your name and/or address, state this prominently at the beginning of your comment. However, we will not consider anonymous comments. We will make all submissions from organizations or businesses, and from individuals identifying themselves as representatives or officials of

organizations or businesses, available for public inspection in their entirety.

MMS Federal Register Liaison Officer: Denise Johnson (202) 208–3976.

Dated: December 17, 2003.

Lucy Querques Denett,

Associate Director for Minerals Revenue Management.

[FR Doc. 03–31796 Filed 12–24–03; 8:45 am]

BILLING CODE 4310–MR–P

INTERNATIONAL TRADE COMMISSION

[Investigation No. 731–TA–1023 (Final)]

Certain Ceramic Station Post Insulators From Japan

Determination

On the basis of the record [1] developed in the subject investigation, the United States International Trade Commission (Commission) determines, pursuant to section 735(b) of the Tariff Act of 1930 (19 U.S.C. 1673d(b)) (the Act), that an industry in the United States is materially injured by reason of imports from Japan of certain ceramic station post insulators,[2] provided for in subheading 8546.20.00 of the Harmonized Tariff Schedule of the United States, that have been found by the Department of Commerce (Commerce) to be sold in the United States at less than fair value (LTFV).

Background

The Commission instituted this investigation effective December 31, 2002, following receipt of a petition filed with the Commission and Commerce by Lapp Insulator Company LLC (Lapp), LeRoy, NY; Newell Porcelain Co., Inc. (Newell), Newell, WV; Victor Insulators, Inc. (Victor), Victor, NY; and the IUE–CWA, AFL–CIO, Washington, DC. The final phase of the investigation was scheduled by the Commission following notification of a preliminary determination by Commerce that imports of certain ceramic station post insulators from Japan were being sold at LTFV within the meaning of section 733(b) of the Act (19 U.S.C. 1673b(b)). Notice of the scheduling of the final phase of the Commission's investigation and of a public hearing to be held in connection therewith was given by posting copies of the notice in the Office of the Secretary, U.S. International Trade Commission, Washington, DC, and by publishing the notice in the **Federal Register** of July 21, 2003 (68 FR 43162). The hearing was held in Washington, DC, on October 29, 2003, and all persons who requested the opportunity were permitted to appear in person or by counsel.

The Commission transmitted its determination in this investigation to the Secretary of Commerce on December 12, 2003. The views of the Commission are contained in USITC Publication 3655 (December 2003), entitled *Certain Ceramic Station Post Insulators from Japan: Investigation No. 731–TA–1023 (Final).*

By order of the Commission.

Issued: December 19, 2003.

Marilyn R. Abbott,

Secretary.

[FR Doc. 03–31782 Filed 12–24–03; 8:45 am]

BILLING CODE 7020–02–P

[1] The record is defined in sec. 207.2(f) of the Commission's Rules of Practice and Procedure (19 CFR 207.2(f)).

[2] The subject products include station post insulators manufactured of porcelain, of standard strength, high strength, or extra-high strength, solid core or cavity core, single unit or stacked unit, assembled or unassembled, and with or without hardware attached, rated at 115 kilovolts (kV) voltage class and above (550 kilovolt Basic Impulse Insulation Level (BIL) and above).

JUDICIAL CONFERENCE OF THE UNITED STATES

Hearing of the Judicial Conference Advisory Committee on Rules of Civil Procedure

AGENCY: Judicial Conference of the United States, Advisory Committee on Rules of Civil Procedure.

ACTION: Notice of cancellation of open hearing.

SUMMARY: The public hearing on proposed amendments to the Federal Rules of Civil Procedure, scheduled for January 9, 2004, in Houston, Texas, has been canceled. [Original notice of hearing appeared in the **Federal Register** of September 10, 2003.]

FOR FURTHER INFORMATION CONTACT: John K. Rabiej, Chief, Rules Committee Support Office, Administrative Office of the United States Courts, Washington, DC 20544, telephone (202) 502–1820.

Dated: December 19, 2003.

John K. Rabiej,

Chief, Rules Committee Support Office.

[FR Doc. 03–31833 Filed 12–24–03; 8:45 am]

BILLING CODE 2210–55–M

DEPARTMENT OF JUSTICE

Notice of Lodging of Consent Decree Under the Comprehensive Environmental Response, Compensation, and Liability Act

In accordance with 28 U.S.C. 50.7, notice is hereby given that on December 12, 2003, a proposed Consent Decree in *United States* v. *William J. Gallagher, Executor of the Estate of Sara Noznesky,* Civ. No. 00–5707–BWK (E.D. Pa.), was lodged with the United States District Court for the Eastern District of Pennsylvania.

The proposed consent decree would resolve the United States' claims under sections 106 and 107 of the Comprehensive Environmental Response, Compensation, and Liability Act (''CERCLA''), 42 U.S.C. 9606, 9607, against William J. Gallagher, Executor of the Estate of Sara Noznesky (''Settling Defendant'') for response costs incurred by EPA at the Kennett Square Junkyard Superfund Site (''Site'') located in Chester County, Pennsylvania. The Estate of Sara Noznesky is the current owner and operator of the Site and thus is liable under CERCLA section 107(a)(1).

EPA has thoroughly evaluated the Settling Defendant's ability to pay, and has determined that the Settling Defendant can afford to pay: (1) An initial payment of $100,000; (2) one hundred percent (100%) of the net proceeds from the sale of the Site property; and (3) fifty percent (50%) of the funds that will be generated from amended tax returns. The total settlement amount is estimated at approximately $500,000. Settling Defendant has agreed to make the above stated payments to EPA to resolve its liability for the conditions at the Site.

The Department of Justice will receive for a period of thirty (30) days from the date of this publication comments relating to the Consent Decree. Comments should be addressed to the Assistant Attorney General, Environment and Natural Resources Division, P.O. Box 7611, U.S. Department of Justice, Washington, DC 20044–7611, and should refer to *United States* v. *William J. Gallagher, Executor of the Estate of Sara Noznesky,* Civ. No. 00–5707 (E.D. Pa.), D.J. Ref. 90–11–3–07086.

The Consent Decree may be examined at the Office of the United States Attorney for the Eastern District of Pennsylvania, 615, Chestnut Street, Philadelphia, PA, 19106, and at U.S. EPA Region 3, 1650 Arch Street, Philadelphia, PA 19103–2029. During the public comment period, the Consent

Decree, may also be examined on the following Department of Justice Web site, *http://www.usdoj.gov/enrd/open.html.* A copy of the Consent Decree may also be obtained by mail from the Consent Decree Library, PO Box 7611, U.S. Department of Justice, Washington, DC 20044–7611 or by faxing or e-mailing a request to Tonia Fleetwood (*tonia.fleetwood@usdoj.gov*), fax no. (202) 514–0097, phone confirmation number (202) 514–1547. In requesting a copy of the Consent Decree from the Consent Decree Library, please enclose a check in the amount of $13.00 (25 cents per page reproduction cost) payable to the U.S. Treasury.

Robert D. Brook,

Assistant Section Chief, Environmental Enforcement Section, Environment and Natural Resources Division.

[FR Doc. 03–31783 Filed 12–24–03; 8:45 am]

BILLING CODE 4410–15–M

DEPARTMENT OF JUSTICE

Notice of Lodging of Consent Decree Between the United States of America and Erwin Grant and the Real Property Located at 3368 N.E. Martin Luther King, Jr. Boulevard Under the Comprehensive Environmental Response, Compensation, and Liability Act

Under 28 CFR 50.7, notice is hereby given that on December 19, 2003, a proposed Consent Decree (''Consent Decree'') in the case of *United States of America* v. *Erwin Grant and Real Property Located at 3368 N.E. Martin Luther King, Jr. Boulevard,* Civil Action No. 00–1536–BR (D. Or.), was lodged with the United States District Court for the District of Oregon.

In this action the United States sought recovery of costs incurred in connection with the response action taken at the Grant Warehouse Superfund Site, located at 3368 N.E. Martin Luther King, Jr. Boulevard, Portland, Oregon. The Consent Decree requires Erwin Grant, acting through his conservator, Ken Grant, to sell the Grant Warehouse to the Portland Development Commission, and to provide in the purchase and sale agreement that $88,500 (an amount expected to be half of the sale price) of the proceeds will be paid to the United States in reimbursement of response costs. In exchange, the United States will provide a covenant not to sue and contribution protection applicable to both the Grant Warehouse property and to Erwin Grant personally.

The Department of Justice will receive for a period of thirty (30) days from the date of this publication comments relating to the Consent Decree. Comments should be addressed to the Assistant Attorney General, Environment and Natural Resources Division, PO Box 7611, U.S. Department of Justice, Washington, DC 20044–7611, and should refer to *United States of America* v. *Erwin Grant and Real Property Located at 3368 N.E. Martin Luther King, Jr. Boulevard,* D.J. Ref. 90–11–3–06611/1.

The Consent Decree may be examined at the Office of the United States Attorney, District of Oregon, 1000 SW Third Ave., Suite 6000, Portland, OR 97204–2902, and at U.S. EPA Region 10, 1200 Sixth Avenue, Seattle, WA 98101. During the public comment period, the Consent Decree may be examined on the following Department of Justice Web site: *http://www.usdoj.gov/enrd/open.html.* A copy of the Consent Decree may also be obtained by mail from the Consent Decree Library, PO Box 7611, U.S. Department of Justice, Washington, DC 20044–7611, or by faxing or e-mailing a request to Tonia Fleetwood *(tonia.fleetwood@usdoj.gov),* fax no. (202) 514–0097, phone confirmation number (202) 514–1547. In requesting a copy from the Consent Decree Library, please enclose a check in the amount of $4.50 (25 cents per page reproduction cost) payable to the United States Treasury for payment.

Robert Maher,

Assistant Section Chief, Environmental Enforcement Section, Environment and Natural Resources Division.

[FR Doc. 03–31876 Filed 12–24–03; 8:45 am]

BILLING CODE 4410–15–M

DEPARTMENT OF JUSTICE

Notice of Lodging of Consent Decree Pursuant to Comprehensive Environmental Response, Compensation, and Liability Act

Notice is hereby given that on December 16, 2003, two proposed consent decrees in *United States* v. *Ponderosa Fibres of America, Inc., et al.,* Civil Action No. 99–CV–1305, were lodged with the United States District Court for the Northern District of New York.

The first of the two proposed Consent Decrees (''Bernstein et al. Decree'') resolves cost recovery, Federal Debt Collection Procedures Act (''FDCPA'') and Federal Priority Statute (''FPS'') claims against Martin Bernstein, Nathan Bernstein, Robert Pitman and Roland Fjallstrom, collectively, for $140,000, plus interest. The second proposed Decree (''PFA Decree'') resolves the United States' cost recovery claim against Ponderosa Fibres of America, Inc. (''PFA'') for $775,000, to be collected as an allowed general unsecured claim in the Bankruptcy Action. To become effective, the PFA Decree must be approved by both the United States District Court for the Northern District of New York and the United States Bankruptcy Court for the District of Delaware.

For a period of thirty (30) days from the date of this publication, the U.S. Department of Justice will accept comments relating to the proposed Bernstein et al. and PFA Consent Decrees. Comments should be addressed to the Assistant Attorney General of the Environment and Natural Resources Division, U.S. Department of Justice, c/o David L. Weigert, Esq., Environmental Enforcement Section, P.O. Box 7611, Ben Franklin Station, Washington, DC 20044–7611, and should refer to *United States* v. *Ponderosa Fibres of America, Inc., et al.,* Civil Action No. 99–CV–1305 (FJS/RWS), DJ # 90–11–2–1223/1.

The proposed Consent Decrees may be examined at the Office of the United States Attorney, Northern District of New York, 231 Foley U.S. Courthouse, 445 Broadway, Albany, New York and at U.S. Environmental Protection Agency Region II, 290 Broadway, New York, New York. During the public comment period, the Consent Decrees may also be examined on the following Department of Justice Web site, *http://www.usdoj.gov/enrd/open.html.* Copies of the proposed Consent Decrees may also be obtained by mail from the Consent Decree Library, PO Box 7611, U.S. Department of Justice, Washington, DC 20044–7611, or by faxing or e-mailing a request to Tonia Fleetwood (*tonia.fleetwood@usdoj.gov*), fax no. (202) 514–0097, phone confirmation number (202) 514–1547. If requesting copies of one or both the proposed Consent Decrees, please specify the requested Decree(s) and enclose a check in the amount of $4.75 per Decree (25 cents per page reproduction cost) payable to the U.S. Treasury.

Ronald G. Gluck,

Assistant Section Chief, Environmental Enforcement Section, Environment and Natural Resources Division, U.S. Department of Justice.

[FR Doc. 03–31784 Filed 12–24–03; 8:45 am]

BILLING CODE 4410–15–M

DEPARTMENT OF LABOR

Employment and Training Administration

[TA–W–52,828]

AK Steel Corp., Rockport Works, Shipping, Receiving and Packaging Department, Rockport, IN; Dismissal of Application for Reconsideration

Pursuant to 29 CFR 90.18(C) an application for administrative reconsideration was filed with the Director of the Division of Trade Adjustment Assistance for workers at AK Steel Corporation, Rockport Works, Shipping, Receiving and Packaging Department, Rockport, Indiana. The application contained no new substantial information which would bear importantly on the Department's determination. Therefore, dismissal of the application was issued.

TA–W–52,828; AK Steel Corporation, Rockport Works, Shipping, Receiving and Packaging Department, Rockport, Indiana (December 4, 2003)

Signed at Washington, DC this 18th day of December 2003.

Timothy Sullivan,

Director, Division of Trade Adjustment Assistance.

[FR Doc. 03–31858 Filed 12–24–03; 8:45 am]

BILLING CODE 4510–30–P

DEPARTMENT OF LABOR

Employment and Training Administration

[TA–W–52,766]

American Suessen Corp., Charlotte, NC; Dismissal of Application for Reconsideration

Pursuant to 29 CFR 90.18(C) an application for administrative reconsideration was filed with the Director of the Division of Trade Adjustment Assistance for workers at American Suessen Corporation, Charlotte, North Carolina. The application contained no new substantial information which would bear importantly on the Department's determination. Therefore, dismissal of the application was issued.

TA–W–52,766; American Suessen Corporation (December 4, 2003)

Signed at Washington, DC this 18th day of December 2003.

Timothy Sullivan,

Director, Division of Trade Adjustment Assistance.

[FR Doc. 03–31859 Filed 12–24–03; 8:45 am]

BILLING CODE 4510–30–P

DEPARTMENT OF LABOR

Employment and Training Administration

[TA–W–52,128, TA–W–52,128A, and TA–W–52,128B]

Control Engineering Company, Pellston, MI; Control Engineering Company, Harbor Springs, MI; Control Engineering Company, Boyne City, MI; Notice of Affirmative Determination Regarding Application for Reconsideration

By letter of September 5, 2003, a company official requested administrative reconsideration of the Department of Labor's Notice of Negative Determination Regarding Eligibility to Apply for Worker Adjustment Assistance, applicable to workers of the subject firm. The denial notice was signed on August 15, 2003, and published in the **Federal Register** on September 2, 2003 (68 FR 52227).

The Department reviewed the request for reconsideration and has determined that the Department will conduct a survey of additional customers that were not contacted in the initial investigation to establish whether imports contributed importantly to separations at the petitioning workers' facilities.

Conclusion

After careful review of the application, I conclude that the claim is of sufficient weight to justify reconsideration of the Department of Labor's prior decision. The application is, therefore, granted.

Signed at Washington, DC, this 8th day of December, 2003.

Elliott S. Kushner,

Certifying Officer, Division of Trade Adjustment Assistance.

[FR Doc. 03–31862 Filed 12–24–03; 8:45 am]

BILLING CODE 4510–30–P

DEPARTMENT OF LABOR

Employment and Training Administration

[TA–W–52,622]

Descartes Systems (USA) LLC, an Affiliate of the Descartes Systems Group, Inc., Atlanta, GA; Notice of Negative Determination Regarding Application for Reconsideration

By application of October 9, 2003, a petitioner requested administrative reconsideration of the Department's negative determination regarding eligibility for workers and former workers of the subject firm to apply for Trade Adjustment Assistance (TAA). The denial notice applicable to workers of Descartes Systems (USA) LLC, Atlanta, Georgia was signed on September 4, 2003, and published in the **Federal Register** on October 10, 2003 (68 FR 58719).

Pursuant to 29 CFR 90.18(c) reconsideration may be granted under the following circumstances:

(1) If it appears on the basis of facts not previously considered that the determination complained of was erroneous;

(2) If it appears that the determination complained of was based on a mistake in the determination of facts not previously considered; or

(3) If in the opinion of the Certifying Officer, a mis-interpretation of facts or of the law justified reconsideration of the decision.

The TAA petition was filed on behalf of workers at Descartes Systems (USA) LLC, Atlanta, Georgia engaged in employment related to providing electronic data interchange services. The petition was denied because the petitioning workers did not produce an article within the meaning of Section 222 of the Act.

The petitioner appears to imply that the petitioning worker group should be considered eligible for TAA on the basis that they created an article as part of a ''paperless'' process.

Data exchange services are not tangible commodities, that is, marketable products, and they are not listed on the Harmonized Tariff Schedule of the United States (HTS), which describes all products imported to or exported from the United States.

Further, the TAA program was established to help workers who produce articles and who lose their jobs as a result of trade agreements. Throughout the Trade Act an article is often referenced as something that can be subject to a duty. To be subject to a duty on a tariff schedule an article will

have a value that makes it marketable, fungible and interchangeable for commercial purposes. But, although a wide variety of tangible products are described as articles and characterized as dutiable in the HTS, informational products that could historically be sent in letter form and that can currently be electronically transmitted, are not listed in the HTS. Such products are not the type of products that customs officials inspect and that the TAA program was generally designed to address.

Only in very limited instances are service workers certified for TAA, namely the worker separations must be caused by a reduced demand for their services from a parent or controlling firm or subdivision whose workers produce an article and who are currently under certification for TAA.

Conclusion

After review of the application and investigative findings, I conclude that there has been no error or misinterpretation of the law or of the facts which would justify reconsideration of the Department of Labor's prior decision. Accordingly, the application is denied.

Signed at Washington, DC, this 18th day of November, 2003.

Linda G. Poole,

Certifying Officer, Division of Trade Adjustment Assistance.

[FR Doc. 03–31861 Filed 12–24–03; 8:45 am]

BILLING CODE 4510–30–P

DEPARTMENT OF LABOR

Employment and Training Administration

[TA–W–52,972]

Exfo Gnubi Products Group, Inc., Gnubi Communications, L.P., Gnubi Communications, Inc., Addison, TX; Amended Certification Regarding Eligibility To Apply for Worker Adjustment Assistance

In accordance with section 223 of the Trade Act of 1974 (19 U.S.C. 2273) the Department of Labor issued a Certification of Eligibility to Apply for Worker Adjustment Assistance on October 17, 2003, applicable to workers of Exfo Gnubi Products Group, Inc., Addison, Texas. The notice was published in the **Federal Register** on November 6, 2003 (68 FR 62834).

At the request of the State agency, the Department reviewed the certification for workers of the subject firm. The workers are engaged in the production of telecommunications test equipment.

New information shows that Exfo Gnubi Products Group, Inc. purchased Gnubi Communications in October 2002. Workers separated from employment at the subject firm had their wages reported under two separate unemployment insurance (UI) tax accounts for Gnubi Communications, L.P. and Gnubi Communications, Inc.

Accordingly, the Department is amending the certification to properly reflect this matter.

The intent of the Department's certification is to include all workers of Exfo Gnubi Products Group, Inc., Addison, Texas who were adversely affected by a shift in production of telecommunications test equipment to Canada.

The amended notice applicable to TA–W–52,972 is hereby issued as follows:

All workers of Exfo Gnubi Products Group, Inc., Gnubi Communications, L.P., and Gnubi Communications, Inc., Addison, Texas, who became totally or partially separated from employment on or after September 9, 2002, through October 17, 2005, are eligible to apply for adjustment assistance under section 223 of the Trade Act of 1974.

Signed at Washington, DC this 21st day of November 2003.

Richard Church,

Certifying Officer, Division of Trade Adjustment Assistance.

[FR Doc. 03–31857 Filed 12–24–03; 8:45 am]

BILLING CODE 4510–30–P

DEPARTMENT OF LABOR

Employment and Training Administration

[TA–W–52,725]

Fishing Vessel (F/V) Bad Betty, Homer, AK; Dismissal of Application for Reconsideration

Pursuant to 29 CFR 90.18(C) an application for administrative reconsideration was filed with the Director of the Division of Trade Adjustment Assistance for workers at Fishing Vessel (F/V) Bad Betty, Homer, Alaska. The application contained no new substantial information which would bear importantly on the Department's determination. Therefore, dismissal of the application was issued.

TA–W–52,725; Fishing Vessel (F/V) Bad Betty, Homer, Alaska (December 4, 2003)

Signed at Washington, DC this 18th day of December 2003.

Timothy Sullivan,

Director, Division of Trade Adjustment Assistance.

[FR Doc. 03–31860 Filed 12–24–03; 8:45 am]

BILLING CODE 4510–30–P

DEPARTMENT OF LABOR

Employment and Training Administration

Investigations Regarding Certifications of Eligibility To Apply for Worker Adjustment Assistance

Petitions have been filed with the Secretary of Labor under section 221(a) of the Trade Act of 1974 (''the Act'') and are identified in the Appendix to this notice. Upon receipt of these petitions, the Director of the Division of Trade Adjustment Assistance, Employment and Training Administration, has instituted investigations pursuant to section 221(a) of the Act.

The purpose of each of the investigations is to determine whether the workers are eligible to apply for adjustment assistance under Title II, Chapter 2, of the Act. The investigations will further relate, as appropriate, to the determination of the date on which total or partial separations began or threatened to begin and the subdivision of the firm involved.

The petitioners or any other persons showing a substantial interest in the subject matter of the investigations may request a public hearing, provided such request is filed in writing with the Director, Division of Trade Adjustment Assistance, at the address shown below, not later than January 8, 2004.

Interested persons are invited to submit written comments regarding the subject matter of the investigations to the Director, Division of Trade Adjustment Assistance, at the address shown below, not later than January 8, 2004.

The petitions filed in this case are available for inspection at the Office of the Director, Division of Trade Adjustment Assistance, Employment and Training Administration, U.S. Department of Labor, Room C–5311, 200 Constitution Avenue, NW., Washington, DC 20210.

Signed at Washington, DC this 12th day of December 2003.

Timothy Sullivan,

Director, Division of Trade Adjustment Assistance.

APPENDIX

TA–W	Subject firm (petitioners)	Location	Date of institution	Date of petition
Petitions Instituted Between 11/17/2003 and 11/21/2003				
53,541	Gentry Mills, Inc. (Comp.)	Wadesboro, NC	11/17/2003	11/10/2003
53,542	Bunnies By The Bay (Comp.)	Anacortes, WA	11/17/2003	11/01/2003
53,543	Charmilles Technologies Manufacturing (stat)	Owosso, MI	11/17/2003	11/05/2003
53,544	Levi Strauss and Co. (Comp.)	San Antonio, TX	11/17/2003	11/14/2003
53,545	MJ Soffe Co. (Comp.)	Fayetteville, NC	11/17/2003	11/14/2003
53,546	Randolph Products (Wkrs.)	Carlstadt, NJ	11/17/2003	11/14/2003
53,547	Hartz and Co., Inc. (Comp.)	Broadway, VA	11/17/2003	11/11/2003
53,548	Comet Tool (State)	Pitman, NJ	11/17/2003	11/13/2003
53,549	General Electric Financial Assurance (Comp.)	Greenfield, MA	11/17/2003	11/10/2003
53,550	Woholert Corp. (Comp.)	Lansing, MI	11/17/2003	11/07/2003
53,551	Allegheny Ludlum Corp. (Comp.)	Brackenridge, Pa	11/17/2003	11/03/2003
53,552	Carson Industries, Inc. (Comp.)	Freeport, PA	11/17/2003	11/14/2003
53,553	Level 1, Inc. (Comp.)	Rockland, MA	11/17/2003	11/04/2003
53,554	Waltrich Plastic Corp. of Mass (Comp.)	Clinton, MA	11/17/2003	11/03/2003
53,555	Vector Tobacco Inc. (Comp.)	Timberlake, NC	11/17/2003	11/13/2003
53,556	Dan River Inc. (Wkrs.)	Sevierville, TN	11/17/2003	11/14/2003
53,557	Paxar Americas (Comp.)	Snow Hill, NC	11/17/2003	11/17/2003
53,558	Red Wing Shoe Co., Inc. (Comp.)	Potosi, MO	11/18/2003	11/05/2003
53,559	Marathon Oil Company (Comp.)	Findlay, OH	11/18/2003	10/31/2003
53,560	International Paper (Wkrs)	Memphis, TN	11/18/2003	11/17/2003
53,561	Lucerne Technologies LLC (Comp.)	Bolivar, TN	11/18/2003	11/03/2003
53,562	Weyerhauser (IAW)	Longview, WA	11/18/2003	11/13/2003
53,563	Pillowtex Corp., (Wkrs)	Commerce, GA	11/18/2003	11/14/2003
53,564	Allegheny Ludlum Corp. (Comp.)	Leechburg, PA	11/18/2003	11/03/2003
53,565	Nylstar, Inc. (Comp.)	Ridgeway, VA	11/18/2003	11/10/2003
53,566	Fishman and Tobin (UNITE)	Conshohocken, PA	11/18/2003	11/07/2003
53,567	Ampacet Texas LP (Comp.)	Latexo, TX	11/18/2003	11/12/2003
53,568	EJE Research (Comp.)	Buffalo, NY	11/18/2003	01/03/2003
53,569	Irving Tanning Co. (Comp.)	Hartland, ME	11/18/2003	11/06/2003
53,570	Thermo Forma (Wkrs)	Marietta, OH	11/18/2003	10/26/2003
53,571	Maynard Steel Casting Co. (Comp.)	Milwaukee, WI	11/18/2003	11/03/2003
53,572	Johnson and Johnson (NJ)	N. Brunswick, NJ	11/18/2003	11/17/2003
53,573	Textron PFPD (Wkrs)	Rockfrord, IL	11/18/2003	11/05/2003
53,574	Spring Industries (Comp.)	Fort Lawn, SC	11/18/2003	11/13/2003
53,575	PolyOne Corp. (AR)	Wynne, AR	11/18/2003	11/17/2003
53,576	Kraft Foods (Comp)	Northlake, IL	11/18/2003	11/17/2003
53,577	TDK Texas Corp. (Wkrs)	El Paso, TX	11/19/2003	11/17/2003
53,578	MT Picture Display Corp. of America (Comp)	Horseheads, NY	11/19/2003	11/07/2003
53,579	Dillon Floral Corp. (Comp)	Bloomsburg, PA	11/19/2003	11/11/2003
53,580	Piedmont Bottling and Vending, Inc. (Comp)	Hickory, NC	11/19/2003	11/12/2003
53,581	NW Services, Inc. (Comp)	Hickory, NC	11/19/2003	11/12/2003
53,582	Avondale Mills (Wkrs)	Burnsville, NC	11/19/2003	10/31/2003
53,583	Procter and Gamble Paper Products Co. (PACE).	Green Bay, WI	11/19/2003	11/11/2003
53,584	Advantek (MN)	Minnetonka, MN	11/19/2003	11/03/2003
53,585	Sealed Air Corp. (PACE)	Salem, IL	11/19/2003	10/30/2003
53,586	MacBrad Wholesale Flowers, Inc. (Wkrs)	Pasadena, TX	11/19/2003	11/06/2003
53,587	Sensient Imaging Technologies, Inc. (Comp)	Piqua, OH	11/19/2003	10/28/2003
53,588	Severna an Amphina Co. (NJ)	Parsippany, NJ	11/19/2003	11/18/2003
53,589	Charmilles Technologies Mfg. (Comp)	Owosso, MI	11/19/2003	11/05/2003
53,590	Noble Construction Equipment (Comp)	Lubbock, TX	11/19/2003	11/17/2003
53,591	Steward, Inc. (Wkrs)	Chattanooga, TN	11/20/2003	10/29/2003
53,592	DyStar LP (Comp)	Charlotte, NC	11/20/2003	11/18/2003
53,593	Phoenix Metal Technologies (Comp)	Lexington, KY	11/20/2003	11/12/2003
53,594	Kaneka Delaware Corp. (Comp)	Delaware City, DE	11/20/2003	11/12/2003
53,595	Perm Cast LLC (Comp)	Cynthiana, KY	11/20/2003	11/11/2003
53,596	Jeld-Wen (Wkrs)	Susanville, CA	11/20/2003	11/10/2003
53,597	Fashion Technologies (Wkrs)	Gaffney, SC	11/20/2003	11/01/2003
53,598	Hercules, Inc. (Comp)	Hattiesburg, MS	11/20/2003	11/11/2003
53,599	American Allsafe Co. (Comp)	Tonawanda, NY	11/20/2003	11/07/2003
53,600	Leica Microsystems, Inc. (USWA)	Depew, NY	11/20/2003	11/12/2003
53,601	Paxar Americas (Comp)	Cowpens, SC	11/21/2003	11/20/2003
53,602	GST Autoleather, Inc. (Comp)	Reading, PA	11/21/2003	11/20/2003
53,603	Carrier Corporation (SMWIA)	Syracuse, NY	11/21/2003	11/14/2003
53,604	Springs Industries, Inc. (Comp)	Rock Hill, SC	11/21/2003	11/14/2003
53,605	TNS Intersearch (Wkrs)	Youngstown, OH	11/21/2003	11/19/2003
53,606	Extreme Tool and Engineering (Comp)	Wakefield, MI	11/21/2003	11/13/2003
53,607	Med Data, Inc. (MT)	Corvalis, MT	11/21/2003	11/18/2003
53,608	Avery Dennison (Comp)	Meridian, MS	11/21/2003	11/06/2003

APPENDIX—Continued

TA–W	Subject firm (petitioners)	Location	Date of institution	Date of petition
53,609	Conn-Selmer, Inc. (UAW)	E. Lake, OH	11/21/2003	11/17/2003
53,610	Besly Products Corporation (UAW)	S. Beloit, IL	11/21/2003	11/17/2003
53,611	Intercontinental Polymers, Inc. (Comp)	Lowland, TN	11/21/2003	11/13/2003
53,612	Glatfelter (Comp)	Neenah, WI	11/21/2003	11/19/2003
Petitions Instituted Between 11/24/2003 and 11/28/2003				
53,613	Houston/NANA (AK)	Fairbanks, AK	11/24/2003	11/17/2003
53,614	Advance Transformer Co. (Comp)	Chicago, IL	11/24/2003	11/10/2003
53,615	Teleflex Medical (Comp)	Fall River, MA	11/24/2003	11/14/2003
53,616	Watlow Controls (MN)	Winona, MN	11/24/2003	11/18/2003
53,617	Cummins Engine Co. (Wkrs)	Neillsville, WI	11/24/2003	10/30/2003
53,618	DAY International, Inc. (Comp)	Greenville, SC	11/24/2003	11/17/2003
53,619	Timken US Corp (Wkrs)	Rockford, IL	11/24/2003	11/13/2003
53,620	Creekwood, Inc. (Comp)	Columbia, TN	11/24/2003	11/14/2003
53,621	Rainbow Ranch (Comp)	Chehalis, WA	11/25/2003	11/20/2003
53,622	JVC Magnetics America Co. (Comp)	Tuscaloosa, AL	11/25/2003	11/20/2003
53,623	Fashion Sportswear Corp. (Comp)	Fall River, MA	11/25/2003	11/19/2003
53,624	GE Lighting, Inc. (Comp)	Logan, OH	11/25/2003	11/12/2003
53,625	Valentine Tool and Stamping (Comp)	Norton, MA	11/25/2003	11/21/2003
53,626	P and R Trucking Services, Inc. (Comp)	St. Joseph, MO	11/25/2003	11/19/2003
53,627	Washout Co. (The) (Comp)	St. Joseph, MO	11/25/2003	11/19/2003
53,628	G and R Transport (Comp)	St. Joseph, MO	11/25/2003	11/19/2003
53,629	Twitchell Corp. (Comp)	Dothan, AL	11/25/2003	11/19/2003
53,630	Pechiney Plastic Packaging (Wkrs)	Des Moines, IA	11/25/2003	11/19/2003
53,631	Main Street Textiles LP (Comp)	Fall River, MA	11/25/2003	11/18/2003
53,632	Coventry Narrow Fabrics, Inc. (UNITE)	Coventry, RI	11/25/2003	11/18/2003
53,633	IBM Technology Group (Wkrs)	Essex Junction, VT	11/25/2003	11/24/2003
53,634	Virginia KMP Corp. (Comp)	Dallas, TX	11/25/2003	11/18/2003
53,635	Keykert USA (Comp)	Webberville, MI	11/25/2003	11/21/2003
53,636	CIM Harris Systems (Comp)	Skokie, IL	11/25/2003	11/10/2003
53,637	Melton's Metals (Comp)	Concord, NC	11/25/2003	11/17/2003
53,638	American Shoe Corp. (ME)	Skowhegan, ME	11/25/2003	11/16/2003
53,639	Honeywell Sensing and Control (Wkrs)	Shelby, NC	11/25/2003	11/20/2003
53,640	Wormuth Brothers (Comp)	Athens, NY	11/25/2003	11/11/2003
53,641	Wentworth Mold, Inc. (Comp)	Pawcatuck, CT	11/25/2003	11/19/2003
53,642	Hayworth Roll and Panel Co., Inc. (Comp)	High Point, NC	11/26/2003	11/20/2003
53,643	Stod Win Co., Inc. (Comp)	Danville, VA	11/26/2003	11/17/2003
53,644	Hussey Copper Ltd. (NJ)	Kenilworth, NJ	11/26/2003	11/20/2003
53,645	SB Power Tools (AR)	Walnut Ridge, AR	11/26/2003	11/24/2003
53,646	Washout Co. (The) (Comp)	St. Joseph, MO	11/26/2003	11/19/2003
53,647	Gates Corporation (Comp)	Denver, CO	11/26/2003	11/24/2003
53,648	International Business Machines (IBM) (Wkrs)	Tulsa, OK	11/26/2003	11/19/2003
53,649	Pavallax Power Computer LLC (Wkrs)	Bridgeport, CT	11/26/2003	11/18/2003
53,650	Stimson Lumber Co. (Comp)	Coeur d'Alene, ID	11/28/2003	11/25/2003
53,651	Cannon ITT Industries (Comp)	Santa Ana, CA	11/28/2003	11/24/2003
53,652	Ericsson (Wkrs)	Framingham, MA	11/28/2003	11/20/2003
53,653	Portland Forge (Wkrs)	Portland, IN	11/28/2003	11/21/2003
53,654	Fresenius Kabi Clayton LP (Comp)	Clayton, NC	11/28/2003	11/25/2003
53,655	John Plant Co., Inc. (The) (Comp)	Ramseur, NC	11/28/2003	11/25/2003
53,656	Halliburton Energy Services (Comp)	Houston, TX	11/28/2003	11/25/2003
53,657	RMG Foundry (Comp)	Mishawaka, IN	11/28/2003	11/18/2003
53,658	Dana Corp. (Wkrs)	Oklahoma City, OK	11/28/2003	11/11/2003
53,659	Bristol Compressors, Inc. (Comp)	Bristol, VA	11/28/2003	11/07/2003
53,660	J.R. Simplot Co., (IBT)	Caldwell, ID	11/28/2003	11/17/2003
53,661	Newstech Pa. (Comp)	Northampton, PA	11/28/2003	11/19/2003
53,662	Newstech NY, Inc. (Comp)	Deferiet, NY	11/28/2003	11/17/2003
53,663	Renfro Corp. (Comp)	Mt. Airy, NC	11/28/2003	11/20/2003
53,664	Owens-Illinois Glass Container (Comp)	Hayward, CA	11/28/2003	08/22/2003
53,665	Brown and Williamson Tobacco Corp. (Comp)	Macon, GA	11/28/2003	11/14/2003
53,666	Falcon Products (Comp)	Canton, MS	11/28/2003	11/10/2003
53,667	Toro Irrigation (Comp)	El Paso, TX	11/28/2003	11/14/2003

[FR Doc. 03–31854 Filed 12–24–03; 8:45 am]

BILLING CODE 4510–30–M

DEPARTMENT OF LABOR

Employment and Training Administration

[TA–W–53,008]

Martens Manufacturing, LLC, Kingsford, Michigan; Notice of Affirmative Determination Regarding Application for Reconsideration

By letter of November 6, 2003, a petitioner requested administrative reconsideration of the Department of Labor's Notice of Negative Determination Regarding Eligibility to Apply for Worker Adjustment Assistance, applicable to workers of the subject firm. The Department's determination notice was signed on October 10, 2003 and published in the **Federal Register** on November 6, 2003 (68 FR 62833).

The Department reviewed the request for reconsideration and has determined that the petitioner has provided additional customer information. Therefore, the Department will conduct further investigation to determine if the workers meet the eligibility requirements of the Trade Act of 1974.

Conclusion

After careful review of the application, I conclude that the claim is of sufficient weight to justify reconsideration of the Department of Labor's prior decision. The application is, therefore, granted.

Signed at Washington, DC, this 4th day of December, 2003.

Elliott S. Kushner,

Certifying Officer, Division of Trade Adjustment Assistance.

[FR Doc. 03–31856 Filed 12–24–03; 8:45 am]

BILLING CODE 4510–30–P

DEPARTMENT OF LABOR

Employment and Training Administration

[TA–W–52,022, TA–W–52,022A, and TA–W–52,022B]

Nortel Networks Corporation, Optical Global Technical Assistance Center, Research Triangle Park, NC; Nortel Networks Corporation, Optical Global Technical Assistance Center, Pittsburgh, PA; Nortel Networks Corporation, Optical Global Technical Assistance Center, Centennial, CO; Notice of Revised Determination on Reconsideration

By application of August 15, 2003, a petitioner requested administrative reconsideration regarding the Department's Negative Determination Regarding Eligibility to Apply for Worker Adjustment Assistance, applicable to the workers of the subject firm.

The initial investigation resulted in a negative determination issued on July 22, 2003, based on the finding that the petitioning workers of this firm do not produce an article within the meaning of section 222 of the Trade Act of 1974. The denial notice was published in the **Federal Register** on August 14, 2003 (68 FR 48645).

In a review of the initial investigation, it was revealed that the work performed by the worker group did perform testing and product modification, and that subject firm workers produced an article as part of the finishing work performed on fiber optic backbone telecommunication networks. It was further revealed that employment declines occurred at all three facilities and that the company is now relying on a Canadian facility to serve the same customer base as that which is served by the three domestic facilities where the petitioners are employed.

Conclusion

After careful review of the additional facts obtained on reconsideration, I conclude that increased imports of articles like or directly competitive with those produced at Nortel Networks Corporation, Optical Global Technical Assistance Center (GTAC), Research Triangle Park, North Carolina (TA–W–52,022); Nortel Networks Corporation, Optical Global Technical Assistance Center, Pittsburgh, Pennsylvania (TA–W–52,022A); and Nortel Networks Corporation, Optical Global Technical Assistance Center, Centennial, Colorado (TA–W–52,022B), contributed importantly to the declines in sales or production and to the total or partial separation of workers at the subject firm. In accordance with the provisions of the Act, I make the following certification:

All workers of Nortel Networks Corporation, Optical Global Technical Assistance Center (GTAC), Research Triangle Park, North Carolina (TA–W–52,022); Nortel Networks Corporation, Optical Global Technical Assistance Center, Pittsburgh, Pennsylvania (TA–W–52,022A); and Nortel Networks Corporation, Optical Global Technical Assistance Center, Centennial, Colorado (TA–W–52,022B), who became totally or partially separated from employment on or after May 26, 2002 through two years from the date of this certification, are eligible to apply for adjustment assistance under section 223 of the Trade Act of 1974.

Signed in Washington, DC this 15th day of December 2003.

Elliott S. Kushner,

Certifying Officer, Division of Trade Adjustment Assistance.

[FR Doc. 03–31863 Filed 12–24–03; 8:45 am]

BILLING CODE 4510–30–P

DEPARTMENT OF LABOR

Employment and Training Administration

Notice of Determinations Regarding Eligibility To Apply for Worker Adjustment Assistance

In accordance with section 223 of the Trade Act of 1974, as amended, (19 U.S.C. 2273), the Department of Labor herein presents summaries of determinations regarding eligibility to apply for trade adjustment assistance for workers (TA–W) number and alternative trade adjustment assistance (ATAA) by (TA–W) number issued during the periods of November 2003.

In order for an affirmative determination to be made and a certification of eligibility to apply for directly-impacted (primary) worker adjustment assistance to be issued, each of the group eligibility requirements of Section 222(a) of the Act must be met.

I. Section (a)(2)(A) all of the following must be satisfied:

A. A significant number or proportion of the workers in such workers' firm, or an appropriate subdivision of the firm, have become totally or partially separated, or are threatened to become totally or partially separated;

B. The sales or production, or both, of such firm or subdivision have decreased absolutely; and

C. Increased imports of articles like or directly competitive with articles produced by such firm or subdivision have contributed importantly to such workers' separation or threat of separation and to the decline in

sales or production of such firm or subdivision; or

II. Section (a)(2)(B) both of the following must be satisfied:

A. A significant number or proportion of the workers in such workers' firm, or an appropriate subdivision of the firm, have become totally or partially separated, or are threatened to become totally or partially separated;

B. There has been a shift in production by such workers' firm or subdivision to a foreign county of articles like or directly competitive with articles which are produced by such firm or subdivision; and

C. One of the following must be satisfied:

1. The country to which the workers' firm has shifted production of the articles is a party to a free trade agreement with the United States;

2. The country to which the workers' firm has shifted production of the articles to a beneficiary country under the Andean Trade Preference Act, African Growth and Opportunity Act, or the Caribbean Basin Economic Recovery Act; or

3. There has been or is likely to be an increase in imports of articles that are like or directly competitive with articles which are or were produced by such firm or subdivision.

Also, in order for an affirmative determination to be made and a certification of eligibility to apply for worker adjustment assistance as an adversely affected secondary group to be issued, each of the group eligibility requirements of section 222(b) of the Act must be met.

(1) Significant number or proportion of the workers in the workers' firm or an appropriate subdivision of the firm have become totally or partially separated, or are threatened to become totally or partially separated;

(2) The workers' firm (or subdivision) is a supplier or downstream producer to a firm (or subdivision) that employed a group of workers who received a certification of eligibility to apply for trade adjustment assistance benefits and such supply or production is related to the article that was the basis for such certification; and

(3) Either—

(A) The workers' firm is a supplier and the component parts it supplied for the firm (or subdivision) described in paragraph (2) accounted for at least 20 percent of the production or sales of the workers' firm; or

(B) A loss or business by the workers' firm with the firm (or subdivision) described in paragraph (2) contributed importantly to the workers' separation or threat of separation.

Negative Determinations for Worker Adjustment Assistance

In the following cases, the investigation revealed that the criteria for eligibility have not been met for the reasons specified.

The investigation revealed that criteria (a)(2)(A)(I.C.) (Increased imports) and (a)(2)(B)(II.B) (No shift in production to a foreign country) have not been met.

TA–W–53,176; TCI Machinery, Inc., including leased workers of Oasis Outsourcing, Gastonia, NC
TA–W–53,308; Burger Structural Steel Co., a subsidiary of Burger Iron Co., Akron, OH
TA–W–53,437; Sequel Manufacturing, Willow Springs, MO
TA–W–53,469; Wexco Corp., Lynchburg, VA
TA–W–53,198; Celanese Acetate, a div. of Celanese AG, Narrows, VA
TA–W–53,023; Cardinal Glass Industries, Inc., Sextonville, WI
TA–W–53,084; Eaton Corp., Watertown, WI
TA–W–52,943; Composites Solutions, Inc. (CSI), West Columbia, SC
TA–W–53,190; The Carriage House Companies, Inc., a subsidiary of Ralcorp Holdings, Inc., Streator, IL
TA–W–53,252; Cytec Industries, Woodbridge, NJ
TA–W–53,258; Allied Machine and Engineering Corp., Dover, OH
TA–W–53,131; Thermotek, Inc., Carrollton, TX
TA–W–53,089; East Coast Hydraulics Operations, Inc. (ECHO), Camp Hill, PA
TA–W–53,146; Metalforming Technologies/Northern Tube, Pinconning, MI
TA–W–53,107; Rapid Mold Solutions, Inc., Erie, PA
TA–W–53,301; Celanese Acetate, LLC, Celriver Plant, Rock Hill, SC
TA–W–52,729; TRW Automotive, Body Controls Systems, NA, Winona, MN
TA–W–53,044; Intermet Corp., Archer Creek Foundry, Lynchburg, VA
TA–W–53,059; Rockwell Automation, LNK Div., Gallipolis, OH
TA–W–53,062; Wallner Tool, Inc., Maple Grove, MN
TA–W–53,358; B.P.B. Manufacturing, Pittston Plant Div., Pittston, PA
TA–W–53,228; Aurora Acquisition Corp., Formerly Clarksburg Casket Co., Hepzibah, WV
TA–W–53,145; General Aluminum Manufacturing Co., Hudson Forge, Hudson, MI
TA–W–53,923; Delphi Chassis, Home Ave./Vandalia Operations, Dayton, OH
TA–W–53,441; Coca Cola North America, Minute Maid Div., Hightstown, NJ
TA–W–53,265; Panoramic, Inc., Janesville, WI
TA–W–53,507; Northern Aluminum Foundry, North Fond du Lac, WI
TA–W–53,453; Giddings and Lewis Foundry, LLC, a company of Thyssen Krupp Technologies, a div. of Thyssen Krupp AG, Menominee, MI
TA–W–53,427; Puzzle-Craft, Wabasso, MN
TA–W–53,385; Bowater, Inc., Calhoun Woodlands Operations, Kingston, TN
TA–W–53,314; Acrotech Midwest, Inc., Crosby, MN
TA–W–53,118; SPX Contech Metal Forge, Dowagiac, MI
TA–W–53,032; The Plastek Group, Master Mold Company, a div. of Triangle Tool Co., Erie, PA

The investigation revealed that criteria (a)(2)(A)(I.C) (increased imports) and (a)(2)(B)(II.C) (has shifted production to a foreign country) have not been met.

TA–W–53,156; Halmode Apparel, Inc., a div. of Kellwood Co., Roanoke, VA
TA–W–53,211; Rogers Corp., South Windham, CT

The workers firm does not produce an article as required for certification under Section 222 of the Trade Act of 1974.

TA–W–53,309; Candle Corp., El Segundo, CA
TA–W–52,330; Air Products and Chemicals, Inc., Corporate Headquarters, Global Engineering Department, Allentown, PA
TA–W–53,376; The Boeing Co., Los Angeles Distribution Center, Torrance, CA
TA–W–53,311; Honeywell Sensing and Controls, Design Drafting Workers, Freeport, IL
TA–W–53,422; United Air Lines, Inc., Cargo Div., Elk Grove, IL
TA–W–53,375; Wyeth Research, Collegeville, PA
TA–W–53,290; Finisar Corp., Sunnyvale, CA
TA–W–53,485; Coutts Library Services, Inc., Niagara Falls, NY
TA–W–53,486; Stanley Services, Smithfield, NC
TA–W–53,516; Delphi Mechatronic Systems, a subsidiary of Delphi Corp., Downers Grove, IL
TA–W–53,225; ASML Track Division Sales and Service, Hillsboro, OR
TA–W–53,231; GE IT Solutions, Inc., Erlanger, KY
TA–W–53,403; Pillowtex Corp., Fieldcrest Cannon, Mesa, AZ
TA–W–53,331; The Budd Group, Grover, NC
TA–W–53,607; Med-Da
TA, Inc., Seattle, WA
TA–W–53,349; Ethan Allen Manufacturing, Inc., Ethan Allen Interiors, Inc., Beecher Falls, VT
TA–W–53,367; Fishing Vessel (F/V), Ginny C, Sitka, AK
TA–W–53,178; Solectron, Solectron CRM Global Services Div., Beaverton, OR

TA–W–53,203; Vibren Technology, a subsidiary of NEC Corp., Boxborough, MA
TA–W–53,074; Finisar Corp., Hayward, CA
TA–W–53,461; Symtech, Inc., Spartanburg, SC
TA–W–53,488; Ferguson Enterprises, Inc., a div. of Wolseley PLC, Portland, OR
TA–W–53,394; Klear Knit, Inc., d/b/a Wales Fabric, Gastonia, NC
TA–W–53,404; Arrow Electronics, Inc., Tellabs In-Plant Store, Boilingbrook, IL
TA–W–53,332; NXL Investments, Inc., Euclid, OH
TA–W–53,229; Conoco-Phillips, Ponca City, OK
TA–W–53,106; Tree Source Industries, Inc., Portland, OR
TA–W–53,164; Agilent Technologies, Manufacturing Test Business Unit, Electronic Manufacturing Test Div. Loveland, CO
TA–W–53,419 & A, B; Encee, Inc., Eden, NC, Kannapolis, NC and Smimfield, NC
TA–W–53,374; Manufacturers' Services Ltd, Charlotte, NC
TA–W–53,280; Allegheny Ludlum Corp., Accounts Payable/Receivable Department, Pittsburgh, PA
TA–W–53,563; Pillowtex Corp., Fieldcrest Cannon, Commerce, GA
TA–W–53,577; TDK Texas Corp., a subsidiary of TDK USA Corp., El Paso, TX
TA–W–53,549; GE Group Life Assurance Co., a subsidiary of General Electric Co., Greenfield, MA
TA–W–53,274; Duluth, Missabe & Iron Range Railway Co. (DM&IR), Duluth, MN
TA–W–53,392; The Montgomery Co., Opelika, AL
TA–W–53,396; Haband Operations, LLC, Peckville, PA
TA–W–53,403; Pillowtex Corp., Fieldcrest Cannon, Mesa, AZ

The investigation revealed that criterion (a)(2)(A)(I.A) (no employment decline) has not been met.

TA–W–53,323; Franklin Electric Co., Inc., Motor Components Div., Jonesboro, IN
TA–W–53,491; State Pattern Works, Inc., Greendale, WI
TA–W–53,267; Columbia Forest Products, Chatham, VA

The investigation revealed that criteria (a)(2)(A)(I.B) (Sales or production, or both, did not decline) and (a)(2)(B)(II.B) (has shifted production to a county not under the free trade agreement with U.S.) have not been met.

TA–W–53,312; Ethan Allen, Inc., Dublin, VA
TA–W–53,428; Hawkeye Concrete Products Co., Mediapolis, IA
TA–W–53,328; International Paper Co., Kaukauna Mill, Kaukauna, WI
TA–W–53,249; Riley Creek Lumber Co., formerly known as Louisiana Pacific Corp., Moyie Springs, ID

The investigation revealed that criteria (2) has not been met. The workers firm (or subdivision) is not a supplier or downstream producer to trade-affected companies.

TA–W–53,175; Ciber, Inc., Fairport, NY
TA–W–53,341; Viking Products, a div. of Underwood Industries of New York, Waverly, NY
TA–W–53,262; Graphic Packaging International, Inc., Carton Plant, Fort Atkinson, WI

The investigation revealed that criteria (3) (A) or (B) has not been met. The workers firm is not a supplier and the component parts it supplied for the firm (or subdivision) did not account for at least 20 percent of the production or sales of the workers' firm; or the loss of business by the workers' firm with the firm (or subdivision) did not contribute importantly to the workers' separation or threat of separation.

TA–W–53,356; Heraeus Electro-Nite Co., Philadelphia, PA

Affirmative Determinations for Worker Adjustment Assistance

The following certifications have been issued; the date following the company name and location of each determination references the impact date for all workers of such determination.

The following certifications have been issued. The requirements of (a) (2) (A) (increased imports) of Section 222 have been met.

TA–W–53,484; Powerwave Technologies, El Dorado Hills, CA: October 30, 2002.
TA–W–53,481; Springs Industries, Inc., including leased workers of Phillips Staffing, Springfield Plant, Laurel Hill, NC: October 31, 2002.
TA–W–53,213; Viking Pump, Inc., Viking Engineered Cast Products '' Iron Foundry Div., Cedar Falls, IA: October 2, 2002.
TA–W–53,096; H. Warshow and Sons, Inc., Milton, PA: September 17, 2002.
TA–W–53,310; Endeavor Mold and Design, Inc., Erie, PA: October 2, 2002.
TA–W–53,246; Twin City Knitting Co., Inc., Conover, NC: October 10, 2002.
TA–W–53,245; Piedmont Industries, Inc., Icard Location, Conover, NC: October 10, 2002.
TA–W–53,236; Analog Devices, Final Test Department, Santa Clara, CA: October 10, 2002.
TA–W–52,823; Channel Products, Inc., Cleveland, OH: August 25, 2002.
TA–W–52,890; Riverdale Decorative Products, div. of Alagold Corp., Montgomery, AL: September 16, 2002.
TA–W–53,087; Manchester Tool Co., Akron, OH: September 18, 2002.
TA–W–53,285; Mastecraft Fabrics, LLC, Oakland Plant, including leased workers of Coxe Personnel Services and Personnel Services Unlimited, Spindale, NC: September 20, 2002.
TA–W–52,208; Randolph Knitting, Inc., Ramseur, NC: October 6, 2002.
TA–W–53,171; IMPC Acquisitions LLC, a div. of Packaging Dynamics LLC, Detroit, MI: September 30, 2002.
TA–W–53,259; O'Neal Steel, Inc., Weldment Div., Roanoke, VA: October 10, 2002.
TA–W–53,264; Burlington House Finishing, a div. of Burlington House, Burlington, NC: October 10, 2002.
TA–W–53,273 & A; Tietex International, Interiors Div., Rocky Mount Plant, Rocky Mount, NC and Williamsburg Plant, Burlington, NC: September 22, 2002.
TA–W–53,076; Griffin Manufacturing, Inc., Fall River, MA: September 26, 2002.
TA–W–53,183; Group Seven Systems, Inc., Lenoir, NC: October 3, 2002.
TA–W–53,256 & A; Connector Service Corp., including leased workers of On-Site Temporary Services, The BECO Group, and Account Resource, Franklin Park, IL and Elgin, IL October 14, 2002.
TA–W–53,269; Weyco Group, Inc., Beaver Dam, WI: October 14, 2002.
TA–W–53,215; Kingsport Foundry and Manufacturing Corp., Kingsport, TN: September 29, 2002.
TA–W–53,253; W. R. Thread Cutting Works, Inc., Union City, NJ: October 15, 2002.
TA–W–53,417; National Pattern, Inc., Saginaw, MI: October 3, 2002.
TA–W–53,579; Dillon Floral Corp., Bloomington, PA: November 11, 2002.
TA–W–53,233; T.D.K. Ferrites Corp., a subsidiary of T.D.K. U.S.A. Corp., Shawnee, OK: August 30, 2003.
TA–W–53,104; Webb Wheel Products, Inc., Cullman, AL: September 25, 2002.
TA–W–53,137; Weave Corporation, Denver, PA: September 10, 2002.
TA–W–53,147; Eagle Picher, Inc., Hillsdale, MI: September 26, 2002.
TA–W–53,150; Rayovac Corp., Manufacturing Div., Fennimore, WI: October 2, 2002.

TA–W–53,284; Jolly Tundra, Inc., Winthrop, MN: October 20, 2002.
TA–W–53,288; Biddeford Blankets, LLC, a subsidiary of Microlife Corp., Biddeford, ME: October 17, 2002.
TA–W–52,878; CID Hosiery Mills, Inc., Lexington, NC: September 16, 2002.
TA–W–53,045; Pennsylvania Machine Works, Inc., Aston, PA: September 10, 2002.
TA–W–53,083; Evy of California, Inc., Los Angeles, CA: September 22, 2002.
TA–W–53,072; Congress Industries, Inc., Hawthorne, NJ: September 4, 2002.
TA–W–53,054; The Doe Run Resources, Corp., Glover Smelting Div., including leased workers of Workforce, Annapolis, MO: September 23, 2002.
TA–W–53,102; Carbone Kirkwood LLC, Cleveland, OH: September 30, 2002.
TA–W–53,120 & A; DVDA, Inc., New York, NY, and D'Angelis Designs, Inc., New York, NY: September 28, 2002.
TA–W–53,174; Sinclair Collins, div. of Parker Hannafin Corp., Akron, OH: October 1, 2002.
TA–W–53,139; Totally Traditional, Inc., Monroe, LA: October 2, 2002.
TA–W–53,130; Oregon Woodworking Co., including leased workers of Mid-Oregon Personnel Services, Bend, OR: October 1, 2002.
TA–W–53,167; Wirco Castings, Inc., including leased workers of Processional Staffing, Inc., New Athens, IL: October 7, 2002.
TA–W–53,158; Zawick Manufacturing Co., Hellertown, PA: October 6, 2002.
TA–W–Newell Porcelain Co., Inc., Newell, WV: October 14, 2002.
TA–W–53,202; Arctic Cat, Inc., Thief River Falls, MN: October 8, 2002.
TA–W–53,279; Atchison Products, Inc., Atchison, KS: September 30, 2002.
TA–W–53,313; Classic Hosiery, Inc., Burlington, NC: October 17, 2002.
TA–W–53,319; Meadwestvaco, Lakewood Mold, a div. of AGI Polymatrix Group, Pittsfield, MA: October 15, 2002.

The following certifications have been issued. The requirements of (a)(2)(B) (shift in production) of Section 222 have been met.

TA–W–53,458; 807 Cutting Services, Inc., El Paso, TX: October 28, 2002.
TA–W–53,438; L. Hardy Co., Inc., Worcester, MA: October 31, 2002.
TA–W–53,421; Seamless Textiles, Inc., a subsidiary of Sara Lee Intimate Apparel, Humacao, PR: October 10, 2002.
TA–W–53,315 & A; OBG Manufacturing Co., Oshkosh B'Gosh, Inc., Liberty, KY and Albany, KY: March 22, 2003.
TA–W–53,303; Champagne Dye Works, Inc., Asheboro, NC: October 20, 2002.
TA–W–53,525; Rene Composite Materials, a subsidiary of Rene Materiaux Composites, Pearisburg, VA: November 12, 2002.
TA–W–53,222; Eastman Kodak Co., Film Finishing Operations, Rochester, NY: October 10, 2002.
TA–W–53,283; Remy Reman, LLC, Bay Springs, MS: October 2, 2002.
TA–W–53,353; LAPP Insulator Co. LLC, Sandersville Facility, Sandersville, GA: October 22, 2002.
TA–W–53,116; Cogent Power, Inc., a subsidiary of Corus and SSAB, Bridgeport, CT: October 2, 2002.
TA–W–53,393; National Mills, Inc., Yates Center Plant, Yates Center, KS: October 30, 2002.
TA–W–53,316; Robert Bosch Tool Corp., Magna Div., a Part of Robert Bosch North America, Elizabethtown, KY: October 21, 2002.
TA–W–53,271; Stahlsac, Inc., Weaverville, NC: October 3, 2002.
TA–W–52,978; Carmel Textile, Inc., Hialeah, FL: August 28, 2002.
TA–W–53,026; Metaldyne Driveline/Hydraulics Group, Bedford Heights, OH: September 17, 2002.
TA–W–53,099; Border Apparel Laundry, Ltd, El Paso, TX: September 29, 2002.
TA–W–53,114; Philchem, Inc., d/b/a Process Chemicals, LLC, Greer, SC: September 30, 2002.
TA–W–53,224; Nevemar Co., High Pressure Laminates Div., Odenton, MD: October 8, 2002.
TA–W–53,277; Ken Lee Precision Corp., Baltimore, MD: October 13, 2002.
TA–W–53,463; Wings West, Inc., Santa Ana, CA: October 23, 2002.
TA–W–53,322; John Crane, Inc., Vandalia, IL: October 22, 2002.
TA–W–53,307; Wetherill Associates, Inc., a div. of Wetherill Enterprises, Inc., including leased workers of Manpower, Miami, FL: October 6, 2002.
TA–W–53,456; Asbury Fluxmaster of Utah, Inc., a subsidiary of Asbury Carbons, Inc., SOS Staffing, Ogden, UT: November 4, 2002.
TA–W–53,306; Springs Window Fashions, LP, Springs Wood Products, including leased workers of Kelly Services, Inc., Wausau, WI: October 20, 2002.
TA–W–53,514; Art Leather Manufacturing Co., Inc., Elmhurst, NY: October 29, 2002.
TA–W–53,523; Wellington Leisure Products, Inc., a wholly owned subsidiary of Standard Industries, Greensboro, GA, A; Madison, GA, B; Granite Quarry, NC and C; Eatonton, GA: November 3, 2002.
TA–W–53,462; Marshall Brass, a div. of S.H. Leggitt Co., Marshall, MI: November 3, 2002.
TA–W–53,474; Etco, Inc., Cord Products Div., Warwick, RI: November 6, 2002.
TA–W–53,431; Sweetwater Apparel, Inc., including leased workers of Skilstaff, Inc., Collinwood, TN: October 31, 2002.
TA–W–53,347; Thomas Apparel Co., a div. of Stone County Garment Co., Hartville, MO: October 31, 2002.
TA–W–53,363; Kelly-Springfield Tire Co., a subsidiary of The Goodyear Tire and Rubber Co., Tyler, TX: October 22, 2002.
TA–W–53,373; AVI Corp., including leased workers of Manpower, Inc., Queensbury, NY: October 22, 2002.
TA–W–53,379; JWD Machine, Inc., Fife, WA: October 13, 2002.
TA–W–53,407; Alice Manufacturing Co., Inc., Foster Plant Div., Easley, SC: October 28, 2002.
TA–W–53,412; Fort Payne Socks, Inc., Hosiery Div., Fort Payne, AL: October 29, 2002.
TA–W–53,210; Connector Service Corp., Dallas, TX: October 9, 2002.
TA–W–53,040; Bowling Green Spinning Co., Bowling Green, SC: September 9, 2002.
TA–W–53,530; Stone County Garment Co., Crane, MO: November 4, 2002.
TA–W–53,557; Paxar Americas, formerly Paxar Corp., Printed Label Div., (Snow Hill Tape), Snow Hill, NC: November 17, 2002.
TA–W–53,226; Cavalier Specialty Yarn Co., Gastonia, NC: October 10, 2002.
TA–W–53,207; Extrasport, Inc., a div. of Johnson Outdoors, Miami, FL: October 3, 2002.
TA–W–53,205; Lear Corp., Interior Systems Div., Lewistown, PA: September 25, 2003.
TA–W–53,292; Salmon Falls Precision Fabricators, Inc., Rochester, NH: October 16, 2002.
TA–W–53,195; Solectron, Systems Integration Div., including leased workers from Express Personnel and Kelly Service, Creedmoor, NC: September 25, 2002.
TA–W–53,180; 3M Company, Electronic Solutions Div., Columbia, MO: September 26, 2002.
TA–W–53,055; Leonard Electric Products of Texas, Brownsville, TX: September 17, 2002.
TA–W–53,123; Reed Rico, Precision Specialty Products, Inc., Holden, MA: September 10, 2002.
TA–W–53,148; Avanex Corp., including leased workers of Accountemps, Electronix Staffing Services, Certified Employment Group, Andiamol Group LLC and Facilities

First, Freemont, CA: September 24, 2002.

TA–W–53,455; Glacier West Sportswear, Inc., a subsidiary of Cascade West Sportswear, Inc., Puyallup, WA: November 4, 2002.

TA–W–53,409; Delta International Machinery, Pentair Tool Group, Tupelo Manufacturing Center, Tupelo, MS: October 11, 2002.

The following certification has been issued. The requirement of upstream supplier to a trade certified primary firm has been met.

TA–W–53,338; Diversified Tool Corp., Cambridge Springs, PA: October 17, 2002.

TA–W–52,910; Safer Textiles Processing Corp., a subsidiary of Safer Holding Corp., Newark, NJ, A; Safer Paper and Transfer Printing Corp., a subsidiary of Safer Holding Corp., East Rutherford, NJ, B; Safer Pigment Corp., a subsidiary of Safer Holding Corp., Newark, NJ, C; Meadows Knitting Corp., a subsidiary of Safer Holding Corp., Newark, NJ and D; Kuttner Prints, Inc., a subsidiary of Safer Holding Corp., Newark, NJ: September 10, 2002.

Negative Determinations for Alternative Trade Adjustment Assistance

In order for the Division of Trade Adjustment Assistance to issue a certification of eligibility to apply for Alternative Trade Adjustment Assistance (ATAA) for older workers, the group eligibility requirements of Section 246(a)(3)(A)(ii) of the Trade Act must be met.

In the following cases, it has been determined that the requirements of Section 246(a)(3)(ii) have not been met for the reasons specified.

Since the workers are denied eligibility to apply for TAA, the workers cannot be certified eligible for ATAA.

TA–W–53,375; Wyeth Research, Collegeville, PA

TA–W–53,376; The Boeing Co., Los Angeles Distribution Center, Torrance, CA

TA–W–53,252; Cytec Industries, Woodbridge, NJ

TA–W–53,308; Burger Structural Steel Co., a subsidiary of Burger Iron Co., Akron, OH

TA–W–53,229; Conoco-Phillips, Ponca City, OK

TA–W–53,106; Tree Source Industries, Inc., Portland, OR

TA–W–53,164; Agilent Technologies, Manufacturing Test Business Unit, Electronic Manufacturing Test Div., Loveland, CO

TA–W–53,419 &A,B; Encee, Inc., Eden, NC, Kannapolis, NC and Smithfield, NC

TA–W–53,374; Manufacturers' Services Ltd., Charlotte, NC and Commercial Loan Technology Div., Houston, TX

TA–W–53,280; Allegheny Ludlum Corp., Accounts Payable/Receivable Dept., Pittsburgh, PA

TA–W–53,563; Pillowtex Corp., Fieldcrest Cannon, Commerce, GA

TA–W–53,577; TDK Texas Corp., a subsidiary of TDK USA Corp., El Paso, TX

TA–W–53,549; GE Group Life Assurance Co., a subsidiary of General Electric Co., Greenfield, MA

TA–W–53,274; Duluth, Missabe and Iron Range Railway Co. (DM&IR), Duluth, MN

TA–W–53,392; The Montgomery Co., Opelika, AL

TA–W–53,396; Haband Operations, LLC, Peckville, PA

TA–W–53,403; Pillowtex Corp., Fieldcrest Cannon, Mesa, AZ

TA–W–53,301; Celanese Acetate, LLC, Celriver Plant, Rock Hill, SC

TA–W–53,107; Rapid Mold Solutions, Inc., Erie, PA

TA–W–53,146; Metalforming Technologies/Northern Tube, Pinconning, MI

TA–W–52,729; TRW Automotive, Body Controls Systems, NA, Winona, MN

TA–W–53,044; Intermet Corp., Archer Creek Foundry, Lynchburg, VA

TA–W–53,059; Rockwell Automation, LNK Div., Gallipolis, OH

TA–W–53,062; Wallner Tool, Inc., Maple Grove, MN

TA–W–53,358; B.P.B. Manufacturing, Pittston Plant Div., Pittston, PA

TA–W–53,228; Aurora Acquisition Corp., Formerly Clarksburg, Casket Co., Hepzibah, WV

TA–W–53,145; General Aluminum Manufacturing Co., Hudson Forge, Hudson, MI

TA–W–52,923; Delphi Chassis Home Ave./Vandalia Operations, Dayton, OH

TA–W–53,441; Coca Cola North America, Minute Maid Div., Hightstown, NJ

TA–W–53,265; Panoramic, Inc., Janesville, WI

TA–W–53,507; Northern Aluminum Foundry, North Fond du Lac, WI

TA–W–53,453; Giddings and Lewis Foundry, LLC, a company of Thyssen Krupp Technologies, a div. of Thyssen Krupp AG, Menominee, MI

TA–W–53,427; Puzzle-Craft, Wabasso, MN

TA–W–53,385; Bowater, Inc., Calhoun Woodlands Operations, Kingston, TN

TA–W–53,314; Acrotech Midwest, Inc., Crosby, MN

TA–W–53,118; SPX Contech Metal Forge, Dowagiac, MI

TA–W–53,032; The Plastek Group, Master Mold Co., a div. of Triangle Tool Company, Erie, PA

Affirmative Determinations for Alternative Trade Adjustment Assistance

In order for the Division of Trade Adjustment Assistance to issue a certification of eligibility to apply for Alternative Trade Adjustment Assistance (ATAA) for older workers, the group eligibility requirements of Section 246(a)(3)(A)(ii) of the Trade Act must be met.

The following certifications have been issued; the date following the company name and location of each determination references the impact date for all workers of such determinations.

In the following cases, it has been determined that the requirements of Section 246(a)(3)(ii) have been met.

I. Whether a significant number of workers in the workers' firm are 50 years of age or older.

II. Whether the workers in the workers' firm possess skills that are not easily transferable.

III. The competitive conditions within the workers' industry (*i.e.*, conditions within the industry are adverse).

TA–W–53,304; Molecular Bioproducts, Inc., Quality Scientific Plastics, Inc., Petaluma, CA: September 24, 2002.

TA–W–53,122; North Pacific Processors, Inc., Cordova, AK: September 3, 2002.

TA–W–53,128; Wilson Sporting Goods, Springfield, TN: October 1, 2002.

TA–W–53,017; Sunbeam Products, Inc., Hattiesburg, MS: September 23, 2002.

TA–W–53,031; Randco Tool and Die, Inc., Meadville, PA: September 12, 2002.

TA–W–53,105; American & Efird, Inc., Maiden Facility, a div. of The Ruddick Corp., Mt. Holly, NC: October 1, 2002.

TA–W–53,007; Contempora Fabrics, Inc. Lumberton, NC: September 4, 2002.

TA–W–52,976; Upholstery Fabric Mill of Georgia, Inc., Jasper, GA: September 19, 2002.

TA–W–52,902; Buffalo China, Inc., Buffalo, NY: September 4, 2002.

TA–W–52,934; Lego Systems, Inc., Shows and Events Div., Enfield, CT: September 26, 2002.

TA–W–52,940; Motor Coach Industries International, Inc., Roswell, NM: September 14, 2002.

TA–W–53,239; Acme Mills Co., Fairway Products, Quincy, MI: September 26, 2002.
TA–W–53,163; Zapata Industries, Inc., Muskogee, OK: October 3, 2002.
TA–W–53,110; Zorlu Manufacturing Co., LLC, Warrenton, GA: September 24, 2002.
TA–W–53,015; Texas PMW, Inc., Pennsylvania Machine Works, Inc., Houston, TX: September 10, 2002.
TA–W–53,028; Bic Corp., Lighters Div., Gaffney, SC: September 23, 2002.
TA–W–52,998; Saint-Gobain Calmar, Inc., City of Industry, CA: September 25, 2002.
TA–W–52,991; Select Elastics of America, Inc., McAllen, TX: September 22, 2002.
TA–W–52,924 & A; Techneglas, Inc., Columbus, OH and Pittston, PA: October 20, 2003.
TA–W–52,925; SKF USA, Inc., Altoona, PA: September 11, 2002.
TA–W–52,931; PCS Nitrogen Fertilizer, LP, a/k/a Memphis Plant, a div. of Potash Corp., Millington, TN: September 2, 2002.
TA–W–52,944; Chiquola Fabrics, LLC, Kingsport, TN: September 15, 2002.
TA–W–52,964; Phelps Dodge Mining Co., Tyrone Mining, LLC, Tyrone, NM: September 3, 2002.
TA–W–52,973; Cortina Fabrics, Swepsonville, NC: September 24, 2002.
TA–W–52,983; Escod Industries, Inc., BKB, Inc., Insilso Technologies, North Myrtle Beach, SC: September 16, 2002.
TA–W–52,768; Titan Plastics Group, Portage, MI: August 27, 2002.
TA–W–52,874; PMW Illinois, Inc. Pennsylvania Machine Works, Inc., Carlinville, IL: September 10, 2002.
TA–W–52,880; Dayton Superior Corp., Birmingham, AL: September 18, 2002.
TA–W–52,858; Wetsel-Oviatt Lumber Company, El Dorado Hills, CA: August 25, 2002.
TA–W–52,796, A,B,C; Halliburton Energy Services, Alaska Operations, Prudhoe Bay, AK, Sterling, AK, Fairbanks, AK and Anchorage, AK: September 2, 2002.
TA–W–52,786; Excelsior Foundry Co., Belleville, IL: August 21, 2002.
TA–W–53,081; Robert Manufacturing Co., Rancho Cucamonga, CA: September 8, 2002.
TA–W–53,011; General Dynamics, Mosses Lake, WA: September 24, 2002.
TA–W–53,022; Ideal Forging Corp., Southington, CT: September 24, 2002.
TA–W–53,038; Coats and Clark, Inc., Toccoa, GA: September 26, 2002.
TA–W–53,042; Solon Manufacturing Co., Rhinelander, WI: September 24, 2002.
TA–W–53,043; Honeywell Airframe Systems, Torrance, CA: September 26, 2002.
TA–W–53,004; Xerox Corp., Business Group Operations (BGO), Webster, NY: September 15, 2002.
TA–W–52,863; Thantex Specialties, Inc., Abbeville, SC: August 27, 2002.
TA–W–52,565; Johns Manville Corp., Engineered Products Group, Vienna, VA: August 8, 2002.
TA–W–52,718; I.T.W. Foils, East Burnswick, NJ: August 21, 2002.
TA–W–52,722; Conso International Corp., Union, SC: August 29, 2002.
TA–W–52,754; ACS Industries, Inc., Villanova Plant, Woonsocket, RI: August 20, 2002.
TA–W–52,762; TT Group, Inc., a wholly owned subsidiary of TT Group, Ltd, Aurora, MO: August 29, 2002.
TA–W–52,792; RST&B Curtain and Drapery, Woodruff, SC: September 2, 2002.
TA–W–52,813; Eastman Kodak Co., HISIS Finishing Department B–313, Rochester, NY: September 2, 2002.
TA–W–52,853; Trenton Technology, Inc., Utica, NY: September 4, 2002.
TA–W–52,572; Allsteel, Inc., a div. of Hon Industries, West Hazleton, PA: August 14, 2002.
TA–W–52,575; Volex, Inc., including leased workers of Accuforce, Manpower and Foothills, Conover, NC: August 13, 2002.
TA–W–52,631; Northland, a Scott Fetzer Co., Watertown, NY: August 12, 2002.
TA–W–52,649; Tellabs Operations, Inc., Bolingbrook, IL: August 19, 2002.
TA–W–52,655; Takata Petri, Inc., a subsidiary of TK Holdings, Port Huron, MI: August 22, 2002.
TA–W–52,664; Slater Steel Corp., a wholly owned subsidiary of Slater Steel, Inc., Fort Wayne, IN: April 7, 2003.
TA–W–52,688; Howes Leather Corp., Curwensville and Cutting Div., Curwensville, PA and Clearfield Whole Leather Div., Curwensville, PA: September 25, 2003.
TA–W–52,793; Milligan and Higgins, a div. of Hudson Industries Corp., Johnstown, NY: September 2, 2002.
TA–W–52,862; Paxar Corp., Fabric Label Group, Lenoir, NC: August 26, 2002.
TA–W–52,573; Gentry Mills, Inc., Albemarle, NC: August 11, 2002.
TA–W–52,603; Sierra Pine Ltd, Medite Div., Medford, OR: August 18, 2002.
TA–W–53,141; Atlas Model Railroad Co., Inc., Hillside, NJ: October 2, 2002.
TA–W–53,238; West Linn Paper Co., West Linn, OR: October 7, 2002.
TA–W–53,151; Cole Hersee Co., Boston, MA: October 3, 2002.
TA–W–53,160; Biddle Precision Components, Sheridan, IN: September 10, 2002.
TA–W–53,165; Thermal Ceramics, RPC, Elgin, IL: October 1, 2002.
TA–W–53,108; The Hon Co., Chair Department including leased workers of Corestaff and Kimco, South Gate, CA: September 22, 2002.
TA–W–53,125; Ranco North America, Invensys Climate Controls Div., including leased workers of Manpower, Link, and Select, Brownsville, TX: September 23, 2002.
TA–W–53,126; Siemens Energy and Automation, Inc., Machine Tool Business Unit, Lebanon, OH: September 23, 2002.
TA–W–53,127; Ault, Inc., Minneapolis, MN: October 2, 2002.
TA–W–53,073; OK–1 Manufacturing Co., Inc., Altus, OK: September 26, 2002.
TA–W–52,955; Andritz, Inc., Muncy Plant #2, a subsidiary of Andritz AG, Muncy, PA: September 5, 2002.
TA–W–52,986; Alcoa Fujikura Ltd, Telecommunications Div., Duncan, SC: September 15, 2002.
TA–W–53,189; Campbell Foundry Co., Harrison, NJ: October 7, 2002.
TA–W–53,212 & A; Heraeus Quartztech, LLC, a subsidiary Heraeus Holding GMBH, Austin, TX and Round Rock, TX: October 8, 2002.
TA–W–53,186; Arlon, Inc., Engineered Coatings and Laminates Div., East Providence, RI: September 29, 2002.
TA–W–53,155; Brazeway, Inc., Brazeway Dewitt Div., including leased workers of Talent Tree, DeWitt, IA: October 6, 2002.
TA–W–52,967; Stoneridge, Inc., Alphabet Div., Mebane, NC: September 20, 2002.
TA–W–52,773; Lebanite Corp., Hardboard Div., Lebanon, OR: November 1, 2002.
TA–W–52,650; PPG Industries, Fiber Glass Division, Lexington, NC: July 26, 2002.
TA–W–53,005; Canton Drop Forge, Canton, OH: September 12, 2002.
TA–W–52,961; IPAC Fabrics, Inc., a subsidiary of Industrial Polymers and Chemicals, Inc., Lewiston, ME: September 5, 2002.
TA–W–52,882; APW, Inc., Erie, PA: September 19, 2002.
TA–W–52,887; Connie Rose Manufacturing, Inc., Philadelphia, PA: September 17, 2002.
TA–W–52,889; Fox River Paper Co., Appleton, WI: September 18, 2002.
TA–W–52,864; Cooper-Atkins Corp., Middlefield, CT: August 19, 2002.

TA–W–53,240; Friedrich Air Conditioning Co., San Antonio, TX: September 30, 2002.

TA–W–52,834; The Safety Stitch, Inc., Harrisville, WV: August 22, 2002.

I hereby certify that the aforementioned determinations were issued during the months of November. Copies of these determinations are available for inspection in Room C–5311, U.S. Department of Labor, 200 Constitution Avenue, NW., Washington, DC 20210 during normal business hours or will be mailed to persons who write to the above address.

Dated: December 15, 2003.

Timothy Sullivan,

Director, Division of Trade Adjustment Assistance.

[FR Doc. 03–31855 Filed 12–24–03; 8:45 am]

BILLING CODE 4510–30–P

DEPARTMENT OF LABOR

Employment Standard Administration; Wage and Hour Division

Minimum Wages for Federal and Federally Assisted Construction; General Wage Determination Decisions

General wage determination decisions of the Secretary of Labor are issued in accordance with applicable law and are based on the information obtained by the Department of Labor from its study of local wage conditions and data made available from other sources. They specify the basic hourly wage rates and fringe benefits which are determined to be prevailing for the described classes of laborers and mechanics employed on construction projects of a similar character and in the localities specified therein.

The determination in these decisions of prevailing rates and fringe benefits have been made in accordance with 29 CFR part 1, by authority of the Secretary of Labor pursuant to the provisions of the Davis-Bacon Act of March 3, 1931, as amended (46 Stat. 1494, as amended, 40 U.S.C. 276a) and of other Federal statutes referred to in 29 CFR part 1, Appendix, as well as such additional statutes as may from time to time be enacted containing provisions for the payment of wages determined to be prevailing by the Secretary of Labor in accordance with the Davis-Bacon Act. The prevailing rates and fringe benefits determined in these decisions shall, in accordance with the provisions of the foregoing statutes, constitute the minimum wages payable on Federal and federally assisted construction projects to laborers and mechanics of the specified classes engaged on contract work of the character and in the localities described therein.

Good cause is hereby found for not utilizing notice and public comment procedure thereon prior to the issuance of these determinations as prescribed in 5 U.S.C. 553 and not providing for delay in the effective date as prescribed in that section, because the necessity to issue current construction industry wage determinations frequently and in large volume causes procedures to be impractical and contrary to the public interest.

General wage determination decisions, and modifications and supersedeas decisions thereto, contain no expiration dates and are effective from their date of notice in the **Federal Register**, or on the date written notice is received by the agency, whichever is earlier. These decisions are to be used in accordance with the provisions of 29 CFR parts 1 and 5. Accordingly, the applicable decision, together with any modifications issued, must be made a part of every contract for performance of the described work within the geographic area indicated as required by an applicable Federal prevailing wage law and 29 CFR part 5. The wage rates and fringe benefits, notice of which is published herein, and which are contained in the Government Printing Office (GPO) document entitled ''General Wage Determinations Issued Under The Davis-Bacon And Related Acts,'' shall be the minimum paid by contractors and subcontractors to laborers and mechanics.

Any person, organization, or governmental agency having an interest in the rates determined as prevailing is encouraged to submit wage rate and fringe benefit information for consideration by the Department.

Further information and self-explanatory forms for the purpose of submitting this data may be obtained by writing to the U.S. Department of Labor, Employment Standards Administration, Wage and Hour Division, Division of Wage Determinations, 200 Constitution Avenue, NW., Room S–3014, Washington, DC 20210.

Modification to General Wage Determination Decisions

The number of the decisions listed to the Government Printing Office document entitled ''General Wage Determinations Issued Under the Davis-Bacon and Related Acts'' being modified are listed by Volume and State. Dates of publication in the **Federal Register** are in parentheses following the decisions being modified.

Volume I

None

Volume II

None

Volume III

None

Volume IV

None

Volume V

Arkansas
AR030001 (June 13, 2003)
AR030003 (June 13, 2003)
AR030008 (June 13, 2003)
AR030027 (June 13, 2003)

Louisiana
LA030004 (June 13, 2003)
LA030009 (June 13, 2003)
LA030014 (June 13, 2003)
LA030015 (June 13, 2003)
LA030017 (June 13, 2003)

Volume VI

None

Volume VII

Nevada
NV030002 (June 13, 2003)
NV030005 (June 13, 2003)
NV030009 (June 13, 2003)

General Wage Determination Publication

General wage determinations issued under the Davis-Bacon and related Acts, including those noted above, may be found in the Government Printing Office (GPO) document entitled ''General Wage Determinations Issued Under the Davis-Bacon and Related Acts''. This publication is available at each of the 50 Regional Government Depository Libraries and many of the 1,400 Government Depository Libraries across the country.

General wage determinations issued under the Davis-Bacon and related Acts are available electronically at no cost on the Government Printing Office site at *www.access.gpo.gov/davisbacon*. They are also available electronically by subscription to the Davis-Bacon Online Service (*http://davisbacon.fedworld.gov)* of the National Technical Information Service (NTIS) of the U.S. Department of Commerce at 1–800–363–2068. This subscription offers value-added features such as electronic delivery of modified wage decisions directly to the user's desktop, the ability to access prior wage decisions issued during the year, extensive Help Desk Support, etc.

Hard-copy subscriptions may be purchased from: Superintendent of Documents, U.S. Government Printing Office, Washington, DC 20402, (202) 512–1800.

When ordering hard-copy subscription(s), be sure to specify the State(s) of interest, since subscriptions may be ordered for any or all of the six separate Volumes, arranged by State. Subscriptions include an annual edition (issued in January or February) which includes all current general wage determinations for the States covered by each volume. Throughout the remainder of the year, regular weekly updates will be distributed to subscribers.

Signed at Washington, DC this 18th day of December 2003.

Carl J. Poleskey,

Chief, Branch of Construction Wage Determinations.

[FR Doc. 03–31609 Filed 12–24–03; 8:45 am]

BILLING CODE 4510–27–M

DEPARTMENT OF LABOR

Mine Safety and Health Administration

Petitions for Modification

The following parties have filed petitions to modify the application of existing safety standards under section 101(c) of the Federal Mine Safety and Health Act of 1977.

1. Kingwood Mining Company, LLC

[Docket No. M–2003–091–C]

Kingwood Mining Company, LLC, Route 1, Box 294C, Newburg, West Virginia 26410 has filed a petition to modify the application of 30 CFR 75.350 (Air courses and belt haulage entries) to its Whitetail K-Mine (MSHA I.D. No. 46–08751) located in Preston County, West Virginia. The petitioner requests that paragraph 1(e) of its previously approved petition for modification, docket number M–2001–049–C be amended to read as follows: Sensors shall be installed not more than 100 feet downwind of all electrical installations in the belt or neutral entry(s) and any equipment or location in the conveyor belt entry where a potential fire source exists. Where an electrical installation is part of a belt drive installation, then only one sensor per statement 1(d) above is required at the belt drive location. The petitioner asserts that the proposed alternative method would provide at least the same measure of protection as the existing standard.

2. Genwal Resources, Inc.

[Docket No. M–2003–092–C]

Genwal Resources, Inc., PO Box 1077, Price, Utah 84501 has filed a petition to modify the application of 30 CFR 75.352 (Return air courses) to its South Crandall Canyon Mine (MSHA I.D. No. 42–02356) located in Emery County, Utah. The petitioner requests a modification of the existing standard to allow the use of the belt entry as a return air course during longwall development. The petitioner asserts that the proposed alternative method would provide at least the same measure of protection as the existing standard.

3. The Banner Company

[Docket No. M–2003–094–C]

The Banner Company, 2700 Lee Highway, Bristol, Virginia 24609 has filed a petition to modify the application of 30 CFR 75.364(b)(2) and (4) (Weekly examination) to its Honey Branch Mine (MSHA I.D. No. 44–06599) located in Wise County, Virginia. The petitioner states that due to deteriorating roof and rib conditions in a portion of the main return entry extending from the surface to a point approximately 150 feet inby, combined with a roof fall in this area, which extends from the outby #1E seal location to the main return travelway, traveling the area to perform weekly examinations would be unsafe. The petitioner proposes to establish evaluation points and have a certified person monitor the affected area to determine the quantity and quality of air at each monitoring station. The petitioner has listed specific terms and conditions in this petition that would be followed when its proposed alternative method is implemented. The petitioner asserts that the proposed alternative method would provide at least the same measure of protection as the existing standard.

4. Dickenson-Russell Coal Company, LLC

[Docket No. M–2003–095–C]

Dickenson-Russell Coal Company, LLC, P.O. Box 2345, Abingdon, Virginia 24212 has filed a petition to modify the application of 30 CFR 75.1710–1(a) (Canopies or cabs; self-propelled diesel-powered and electric face equipment; installation requirements) to its Laurel Mountain Mine (MSHA I.D. No. 44–06444) located in Russell County, Virginia. The petitioner proposes to operate self-propelled electric face equipment without canopies or cabs in mining heights less than 50 inches. The petitioner asserts that application of the existing standard would result in a diminution of safety to the miners.

5. Sierra Minerals Corporation

[Docket No. M–2003–005–M]

Sierra Minerals Corporation, 6164 S. Newport Street, Suite 2000, Centennial, Colorado 80111 has filed a petition to modify the application of 30 CFR 57.15031 (Location of self-rescue devices) to its Yule Quarry Operation (MSHA I.D. No. 05–04438) located in Gunnison County, Colorado. The petitioner requests a modification of the existing standard to eliminate the use of self-rescue devices for persons underground during non-operating hours. The petitioner asserts that application of the existing standard would result in a diminution of safety to visitors at the mine and that the proposed alternative method would provide at least the same measure of protection as the existing standard.

Request for Comments

Persons interested in these petitions are encouraged to submit comments via e-mail to *comments@msha.gov*, or on a computer disk along with an original hard copy to the Office of Standards, Regulations, and Variances, Mine Safety and Health Administration, 1100 Wilson Boulevard, Room 2350, Arlington, Virginia 22209. All comments must be postmarked or received in that office on or before January 28, 2004. Copies of these petitions are available for inspection at that address.

Dated at Arlington, Virginia, this 19th day of December, 2003.

Marvin W. Nichols, Jr.,

Director, Office of Standards, Regulations, and Variances.

[FR Doc. 03–31797 Filed 12–24–03; 8:45 am]

BILLING CODE 4510–43–P

NATIONAL AERONAUTICS AND SPACE ADMINISTRATION

[Notice (03–157)]

NASA Advisory Council, Planetary Protection Advisory Committee; Meeting

AGENCY: National Aeronautics and Space Administration.

ACTION: Notice of meeting.

SUMMARY: In accordance with the Federal Advisory Committee Act, Public Law 92–463, as amended, the National Aeronautics and Space Administration announces a forthcoming meeting of the NASA Advisory Council (NAC), Planetary Protection Advisory Committee (PPAC).

DATES: Monday, January 12, 2004, 8:30 a.m. to 5:15 p.m., Tuesday, January 13, 2004, 8:30 a.m. to 5 p.m.

ADDRESSES: NASA Jet Propulsion Laboratory, Building 167, 4800 Oak Grove Drive, Pasadena, CA 91103.

FOR FURTHER INFORMATION CONTACT: Ms. Marian Norris, Code SB, National Aeronautics and Space Administration, Washington, DC 20546, 202/358–4452, e-mail *mnorris@nasa.gov.*

SUPPLEMENTARY INFORMATION: The meeting will be open to the public up to the capacity of the room. The agenda for the meeting includes the following topics:

—Planetary Protection Program Update
—Planetary Protection Status of Current and Planned Mars Missions
—Concepts for Returned Mars Sample Handling
—Solar System Exploration Program Status
—Planetary Protection Status of Current and Planned Solar System Exploration Missions

Due to increased security measures at the NASA Jet Propulsion Laboratory (JPL), interested members of the public including the news media must contact Cecil Brower, (818) 354–6974, no later than Monday, January 5, 2004, to make arrangements for badging, parking, and being escorted while at JPL. Access to JPL will be limited to those who show proper photo identification and who have made prior arrangements to attend.

It is imperative that the meeting be held on these dates to accommodate the scheduling priorities of the key participants. Visitors will be requested to sign a visitor's register.

Michael F. O'Brien,

Assistant Administrator for External Relations, National Aeronautics and Space Administration.

[FR Doc. 03–31903 Filed 12–24–03; 8:45 am]

BILLING CODE 7510–01–P

NATIONAL AERONAUTICS AND SPACE ADMINISTRATION

[Notice (03–156)]

Aerospace Safety Advisory Panel Meeting

AGENCY: National Aeronautics and Space Administration.

ACTION: Notice of meeting.

SUMMARY: In accordance with the Federal Advisory Committee Act, Public Law 92–463, as amended, the National Aeronautics and Space Administration announces a forthcoming meeting of the Aerospace Safety Advisory Panel.

DATES: Thursday, January 29, 2004, 9 a.m. to 11 a.m. eastern standard time.

ADDRESSES: National Aeronautics and Space Administration Headquarters, 300 E Street, SW., Room 5H46A, Washington, DC 20546.

FOR FURTHER INFORMATION CONTACT: Mr. Mark D. Erminger, Aerospace Safety Advisory Panel Executive Director, Code Q–1, National Aeronautics and Space Administration, Washington, DC 20546, (202) 358–0914.

SUPPLEMENTARY INFORMATION: The newly reconstituted Aerospace Safety Advisory Panel will hold its first Quarterly Meeting. This discussion is pursuant to carrying out its statutory duties for which the Panel reviews, identifies, evaluates, and advises on those program activities, systems, procedures, and management activities that can contribute to program risk. Priority is given to those programs that involve the safety of human flight. The major subjects covered will be: Space Shuttle Program, International Space Station Program, and Cross-Program Areas. The Aerospace Safety Advisory Panel is composed of nine members and one ex-officio member.

The meeting will be open to the public up to the seating capacity of the room (45). Seating will be on a first-come basis. Please contact Ms. Susan Burch on (202) 358–0914 at least 24 hours in advance to reserve a seat. Visitors will be requested to sign a visitor's register and asked to comply with NASA security requirements, including the presentation of a valid picture ID before receiving an access badge. Foreign Nationals attending this meeting will be required to provide the following information: full name; gender; date/place of birth; citizenship; Green card/visa information (number, type, expiration date); passport information (number, country, expiration date); employer/affiliation information (name of institution, address, country, phone); and title/position of visitor. To expedite admittance, attendees can provide identifying information in advance by contacting Ms. Susan Burch via e-mail at *Susan.Burch.nasa.gov* or by telephone at (202) 358–0914.

Photographs will only be permitted during the first 10 minutes of the meeting.

During the first 30 minutes of the meeting, members of the public may make a 5-minute verbal presentation to the Panel on the subject of safety in NASA. To do so, please contact Ms. Susan Burch on (202) 358–0914 at least 24 hours in advance.

Any member of the public is permitted to file a written statement with the Panel at the time of the meeting. Verbal presentation and written comments should be limited to the subject of safety in NASA.

Michael F. O'Brien,

Assistant Administrator for External Relations, National Aeronautics and Space Administration.

[FR Doc. 03–31904 Filed 12–24–03; 8:45 am]

BILLING CODE 7510–01–P

NATIONAL AERONAUTICS AND SPACE ADMINISTRATION

[Notice (03–158)]

Aviation Safety Reporting System Subcommittee; Meeting

AGENCY: National Aeronautics and Space Administration (NASA).

ACTION: Notice of meeting.

SUMMARY: The National Aeronautics and Space Administration announces a forthcoming meeting of the Aviation Safety Reporting System Subcommittee (ASRSS).

DATES: Thursday, January 29, 2004, 9 a.m. to 5 p.m.; and Friday, January 30, 2004, 9 a.m. to 12 noon.

ADDRESSES: Monterey Marriott Hotel, 350 Calle Principal, Monterey, CA 93940.

FOR FURTHER INFORMATION CONTACT: Ms. Mary-Ellen McGrath, Office of Aerospace Technology, National Aeronautics and Space Administration, Washington, DC 20546–0001, 202/358–4729.

SUPPLEMENTARY INFORMATION: The meeting will be open to the public up to the seating capacity of the room. The agenda for the meeting is as follows:

—ASRS Program
- Status Overview
- Strategic Planning
- Runway Safety Project

It is imperative that the meeting be held on these dates to accommodate the scheduling priorities of the key participants.

Michael F. O'Brien,

Assistant Administrator for External Relations.

[FR Doc. 03–31902 Filed 12–24–03; 8:45 am]

BILLING CODE 7510–01–P

NATIONAL ARCHIVES AND RECORDS ADMINISTRATION

Agency Information Collection Activities: Submission for OMB Review; Comment Request

AGENCY: National Archives and Records Administration (NARA).

ACTION: Notice.

SUMMARY: NARA is giving public notice that the agency has submitted to OMB for approval the information collection described in this notice. The public is invited to comment on the proposed information collection pursuant to the Paperwork Reduction Act of 1995.

DATES: Written comments must be submitted to OMB at the address below

on or before January 28, 2004, to be assured of consideration.

ADDRESSES: Comments should be sent to: Office of Information and Regulatory Affairs, Office of Management and Budget, Attn: Mr. Jonathan Womer, Desk Officer for NARA, Washington, DC 20503.

FOR FURTHER INFORMATION CONTACT: Requests for additional information or copies of the proposed information collection and supporting statement should be directed to Tamee Fechhelm at telephone number 301–837–1694 or fax number 301–837–3213.

SUPPLEMENTARY INFORMATION: Pursuant to the Paperwork Reduction Act of 1995 (Pub. L. 104–13), NARA invites the general public and other Federal agencies to comment on proposed information collections. NARA published a notice of proposed collection for this information collection on October 1, 2003 (68 FR 56651 and 56652). No comments were received. NARA has submitted the described information collection to OMB for approval.

In response to this notice, comments and suggestions should address one or more of the following points: (a) Whether the proposed information collection is necessary for the proper performance of the functions of NARA; (b) the accuracy of NARA's estimate of the burden of the proposed information collection; (c) ways to enhance the quality, utility, and clarity of the information to be collected; and (d) ways to minimize the burden of the collection of information on respondents, including the use of information technology. In this notice, NARA is soliciting comments concerning the following information collection:

Title: Applicant Background Survey.

OMB number: 3095–0045.

Agency form number: NA Form 3035.

Type of review: Regular.

Affected public: Applicants for NARA jobs.

Estimated number of respondents: 2,593.

Estimated time per response: 5 minutes.

Frequency of response: On occasion (when an individual applies for a job at NARA).

Estimated total annual burden hours: 216 hours.

Abstract: A diverse workforce enhances our agency by ensuring that we can draw on the widest possible variety of viewpoints and experiences to improve the planning and actions we undertake to achieve our mission and goals. By promoting and valuing workforce diversity, we create a work setting where these varied experiences contribute to a more efficient and dynamic organization and employees can develop to their full potential. To achieve these ends and in accordance with our Strategic Plan, we constantly work to improve our performance in hiring and promoting people in underrepresented groups.

This form is used to obtain source of recruitment, ethnicity, race, and disability data on job applicants to determine if the recruitment is effectively reaching all aspects of the relevant labor pool and to determine if there are proportionate acceptance rates at various stages of the recruitment process. Use of this form allows us to objectively determine the barriers to recruitment and selection that affect underrepresented groups. There is no source of this information other than directly from applicants.

Response is optional. The information is used for evaluating recruitment only and plays no part in the selection of who is hired. The information is not provided to selecting officials and plays no part in the selection of individuals. Instead, it is used in summary form to determine trends over many selections within a given occupation or organizational area. The information is treated in a very confidential manner. No information from the form is entered into the personnel file of the individual selected and all the forms are destroyed after the conclusion of the selection process.

The format of the questions on ethnicity and race are compliant with OMB requirements and comparable to those used by other Federal agencies. This form is a further simplification and update of a similar DOI applicant background survey used by NARA for many years.

Dated: December 12, 2003.

L. Reynolds Cahoon,

Assistant Archivist for Human Resources and Information Services.

[FR Doc. 03–31785 Filed 12–24–03; 8:45 am]

BILLING CODE 7515–01–P

NATIONAL ARCHIVES AND RECORDS ADMINISTRATION

Agency Information Collection Activities: Proposed Collection; Comment Request

AGENCY: National Archives and Records Administration (NARA).

ACTION: Notice.

SUMMARY: NARA is giving public notice that the agency proposes to request extension of a currently approved information collection, NATF Form 36, Microfilm Publication Order Form, used by customers/researchers for ordering roll(s) or microfiche of a microfilm publication. The public is invited to comment on the proposed information collection pursuant to the Paperwork Reduction Act of 1995.

DATES: Written comments must be received on or before February 27, 2004, to be assured of consideration.

ADDRESSES: Comments should be sent to: Paperwork Reduction Act Comments (NHP), Room 4400, National Archives and Records Administration, 8601 Adelphi Rd, College Park, MD 20740–6001; or faxed to 301–837–3213; or electronically mailed to *tamee.fechhelm@nara.gov.*

FOR FURTHER INFORMATION CONTACT: Requests for additional information or copies of the proposed information collection and supporting statement should be directed to Tamee Fechhelm at telephone number 301–837–1694, or fax number 301–837–3213.

SUPPLEMENTARY INFORMATION: Pursuant to the Paperwork Reduction Act of 1995 (Public Law 104–13), NARA invites the general public and other Federal agencies to comment on proposed information collections. The comments and suggestions should address one or more of the following points: (a) Whether the proposed information collection is necessary for the proper performance of the functions of NARA; (b) the accuracy of NARA's estimate of the burden of the proposed information collection; (c) ways to enhance the quality, utility, and clarity of the information to be collected; and (d) ways, including the use of information technology, to minimize the burden of the collection of information on respondents. The comments that are submitted will be summarized and included in the NARA request for Office of Management and Budget (OMB) approval. All comments will become a matter of public record. In this notice, NARA is soliciting comments concerning the following information collection:

Title: Microfilm Publication Order Form.

OMB number: 3095–0046.

Agency form number: NATF Form 36.

Type of review: Regular.

Affected public: Business or for-profit, nonprofit organizations and institutions, federal, state and local government agencies, and individuals or households.

Estimated number of respondents: 5,200.

Estimated time per response: 10 minutes.

Frequency of response: On occasion.

Estimated total annual burden hours: 867 hours.

Abstract: The information collection is prescribed by 36 CFR 1254.72. The collection is prepared by researchers who cannot visit the appropriate NARA research room or who request copies of records as a result of visiting a research room. NARA offers limited provisions to obtain copies of records by mail and requires requests to be made on prescribed forms for certain bodies of records. The National Archives Trust Fund (NATF) Form 36 (11/03), Microfilm Publication Order Form, is used by customers/researchers for ordering a roll, rolls, or a microfiche of a microfilm publication.

Dated: December 12, 2003.

L. Reynolds Cahoon,

Assistant Archivist for Human Resources and Information Services.

[FR Doc. 03–31786 Filed 12–24–03; 8:45 am]

BILLING CODE 7515–01–P

NATIONAL FOUNDATION ON THE ARTS AND THE HUMANITIES

Sunshine Act Meeting of the National Museum Services Board

AGENCY: Institute of Museum and Library Services.

ACTION: Notice of meeting.

SUMMARY: This notice sets forth the agenda of a forthcoming meeting of the National Museum and Library Services Board. This notice also describes the function of the board. Notice of this meeting is required under the Sunshine in Government Act.

TIME/DATE: 1:30 a.m.–4:30 p.m. on Thursday, January 8, 2004.

STATUS: Open.

ADDRESSES: San Diego Museum of Natural History, 1450 El Prado, San Diego, CA, (619) 696–1935.

FOR FURTHER INFORMATION CONTACT: Elizabeth Lyons, Special Assistant to the Director, Institute of Museum and Library Services, 1100 Pennsylvania Avenue, NW., Room 510, Washington, DC 20506, (202) 606–4649.

SUPPLEMENTARY INFORMATION: The National Museum and Library Services Board is established under the Museum and Library Services Act, 20 U.S.C. Section 9101 *et seq.,* advises the Director of the Institute on general policies with respect to the duties, powers, and authorities related to Museum and Library Services.

The meeting on Thursday, January 8, 2004 will be open to the public. If you need special accommodations due to a disability, please contact: Institute of Museum and Library Services, 1100 Pennsylvania Avenue, NW., Washington, DC 20506—(202) 606–8536—TDD (202) 606–8636 at least seven (7) days prior to the meeting date.

Agenda

1st Meeting of the National Museum and Library Services Board at San Diego Museum of Natural History, 1450 El Prado, San Diego, CA

Thursday, January 8, 2004.

1:30 p.m.–2:30 p.m.
- I. Welcome
- II. Ratification of Minutes from the 87th NMSB Meeting
- III. Opening Remarks
- IV. Carla Hayden, President, ALA Welcomes Board
- V. Committee Reports

2:30 p.m.–2:45 p.m. Break

2:45 p.m.–4:15 p.m. Dialogue on Creating and Sustaining a Nation of Learners—San Diego Perspectives:
- Mick Hager, Director of the San Diego Natural History Museum
- Jeffery Kirsch, Director of the Reuben H. Fleet Science Center
- Hugh Davies, Director of the Museum of Contemporary Art
- Anna Tatar, Director of San Diego Public Library

4:15 p.m.–4:30 p.m. Other business

4:30 p.m. Adjourn

Dated: December 22, 2003.

Teresa LaHaie,

Administrative Officer, National Foundation on the Arts and Humanities, Institute of Museum and Library Services.

[FR Doc. 03–32003 Filed 12–23–03; 12:17 pm]

BILLING CODE 7036–01–M

NUCLEAR REGULATORY COMMISSION

[Docket No.: 40–8989; SMC–1559]

Envirocare of Utah, Inc.; Order Modifying Exemption From Requirements Relative to Possession of Special Nuclear Material

Envirocare of Utah, Inc., (Envirocare) operates a low-level waste (LLW) disposal facility in Clive, Utah. This facility is licensed by the State of Utah, an Agreement State. Envirocare is also licensed by Utah to dispose of mixed radioactive and hazardous wastes. In addition, Envirocare has a U.S. Nuclear Regulatory Commission (NRC) license to dispose of byproduct material as defined in 10 CFR part 40.

Section 70.3 of 10 CFR part 70 requires persons who own, acquire, deliver, receive, possess, use, or transfer special nuclear material (SNM) to obtain a license pursuant to the requirements in 10 CFR part 70. The licensing requirements in 10 CFR part 70 apply to persons in Agreement States possessing greater than critical mass quantities as defined in 10 CFR 150.11.

Pursuant to 10 CFR 70.14, ''the Commission may. * * * grant such exemptions from the requirements of the regulations in this part as it determines are authorized by law and will not endanger life or property or the common defense and security and are otherwise in the public interest.''

On May 24, 1999, the NRC transmitted an Order to Envirocare of Utah, Inc. The Order was published in the **Federal Register** on May 21, 1999 (64 FR 27826). The Order exempted Envirocare from certain NRC regulations and permitted Envirocare, under specified conditions, to possess waste containing SNM in greater quantities than specified in 10 CFR part 150, at Envirocare's LLW disposal facility located in Clive, Utah, without obtaining an NRC license pursuant to 10 CFR part 70. The methodology used to establish these limits is discussed in the 1999 Safety Evaluation Report (SER) that supported the 1999 Order.

On January 30, 2003, the NRC revised the Order to (1) Include stabilization of liquid waste streams containing SNM; (2) include the thermal desorption process; (3) change the homogenous contiguous mass limit from 145 kg to 600 kg; (4) change the language and SNM limit associated with footnotes ''c'' and ''d'' of Condition 1 to reflect all materials in Conditions 2 and 3; and (5) omit the confirmatory testing requirements for debris waste. The revised Order was published in the **Federal Register** on February 13, 2003 (68 FR 7399).

Envirocare, in a letter dated July 8, 2003, proposed that NRC amend the 2003 Order to: (1) Include additional SNM concentration limits to Condition 1 of the Order, including limits for SNM with and without magnesium oxide and limits for additional enrichments of uranium-235; (2) revise the limits in Condition 1 to be in units of gram of SNM per gram of waste rather than the current units of pCi of SNM per gram of waste; and (3) increase the limits of plutonium isotopes and uranium-233 to allow for greater flexibility in accepting liquid SNM waste. In addition, Envirocare has requested an evaluation of three new waste treatment technologies. The NRC is evaluating Envirocare's request in two phases. This

modification of the Order addresses the revisions to the table in Condition 1, to include criticality-based concentration limits without magnesium oxide. Phase two will be subject to a separate evaluation and revision of the Order.

A principal emphasis of 10 CFR part 70 is criticality safety and safeguarding SNM against diversion or sabotage. The staff considers that criticality safety can be maintained by relying on concentration limits, under the conditions specified below. Safeguarding SNM against diversion or sabotage is not considered a significant issue because of the diffuse form of the SNM in waste meeting the conditions specified. These conditions are considered an acceptable alternative to the criticality definition provided in 10 CFR 150.11, thereby assuring the same level of protection. The staff reviewed safety aspects of the proposed action (*i.e.*, granting Envirocare's request) in the Safety Evaluation Report, dated September 23, 2003. The staff concluded that additional conditions were required to maintain sufficient protection of health, safety, and the environment. The exemption conditions would be revised as follows:

1. Concentrations of SNM in individual waste containers must not exceed the following values at time of receipt:

Radionuclide	Maximum concentration with MgO (g SNM/g waste)	Maximum concentration without MgO (g SNM/g waste)
U–235 [a]	8.6E–4	9.9E–4
U–235 [b]	5.4E–4	6.2E–4
U–235 [c]	1.2E–5	1.2E–5
U–235 [d]	3.1E–4	3.1E–4
U–235 [e]	7.3E–5	7.3E–5
U–233	7.7E–6	4.7E–4
Pu–239	1.6E–7	2.8E–4
Pu–241	3.5E–9	2.2E–4

[a] for uranium below 10 percent enrichment. Column 1 considers a maximum of 20 percent of the weight of the waste of materials listed in Condition 2. Column 2 considers that materials in condition 2 are not present in bulk quantities.
[b] For uranium at or above 10 percent enrichment. Column 1 considers a maximum of 20 percent of materials listed in Condition 2 of the weight of the waste of materials listed in Condition 2
[c] For uranium at any enrichment with unlimited quantities of materials listed in Conditions 2 and 3
[d] For uranium at any enrichment with sum of materials listed in Conditions 2 and 3 not exceeding 45 percent of the weight of the waste
[e] For uranium at any enrichment with unlimited MgO or beryllium

Plutonium isotopes other than Pu-239 and Pu-241 do not need to be considered in demonstrating compliance with this condition. When mixtures of these SNM isotopes are present in the waste, the sum-of-the-fractions rule, as illustrated below, should be used.

$$\frac{\text{U}-233\text{ conc}}{\text{U}-233\text{ limit}}+\frac{100\text{wt\%U}-235\text{ conc}}{100\text{wt\%U}-235\text{ limit}}+\frac{10\text{wt\%U}-235\text{ conc}}{10\text{wt\%U}-235\text{ limit}}+\frac{\text{Pu}-239\text{ conc}}{\text{Pu}-239\text{ limit}}+\frac{\text{Pu}-241\text{ conc}}{\text{Pu}-241\text{ limit}}\leq 1$$

The concentration values in Condition 1 are operational values to ensure criticality safety. Where the values in Condition 1 exceed concentration values in the corresponding conditions of the State of Utah Radioactive Material License (RML), the concentration values in the RML, which are averaged over the container, may not be exceeded. Higher concentration values are included in Condition 1 to be used in establishing the maximum mass of SNM for non-homogeneous solid waste and liquid waste. The measurement uncertainty values should be less than or equal to 15 percent of the concentration limit, and represent the maximum one-sigma uncertainty associated with the measurement of the concentration of the particular radionuclide.

The SNM must be homogeneously distributed throughout the waste. If the SNM is not homogeneously distributed, then the limiting concentrations must not be exceeded on average in any contiguous mass of 600 kilograms of waste.

2. Except as allowed by notes a, b, c, and d in Condition 1, waste must not contain ''pure forms'' of chemicals containing carbon, fluorine, magnesium, or bismuth in bulk quantities (*e.g.*, a pallet of drums, a B–25 box). By ''pure forms,'' it is meant that mixtures of the above elements such as magnesium oxide, magnesium carbonate, magnesium fluoride, bismuth oxide, etc., do not contain other elements. These chemicals would be added to the waste stream during processing, such as at fuel facilities or treatment such as at mixed waste treatment facilities. The presence of the above materials will be determined by the generator, based on process knowledge or testing.

3. Except as allowed by notes c, d, and e in Condition 1, waste accepted must not contain total quantities of beryllium, hydrogenous material enriched in deuterium, or graphite above one percent of the total weight of the waste. The presence of the above materials will be determined by the generator, based on process knowledge, physical observations, or testing.

4. Waste packages must not contain highly water soluble forms of uranium greater than 350 grams of uranium-235 or 200 grams of uranium-233. The sum of the fractions rule will apply for mixtures of U–233 and U–235. Highly soluble forms of uranium include, but are not limited to: uranium sulfate, uranyl acetate, uranyl chloride, uranyl formate, uranyl fluoride, uranyl nitrate, uranyl potassium carbonate, and uranyl sulfate. The presence of the above materials will be determined by the generator, based on process knowledge or testing.

5. Waste processing of waste containing SNM will be limited to stabilization (mixing waste with reagents), micro-encapsulation, macro-encapsulation using low-density and high-density polyethylene and thermal desorption.

When waste is processed using the thermal desorption process, Envirocare shall confirm the SNM concentration following processing and prior to returning the waste to temporary storage.

Liquid waste may be stabilized provided the SNM concentration does not exceed the SNM concentration limits in Condition 1. For containers of liquid waste with more than 600 kilograms of waste, the total mass of SNM shall not exceed the SNM concentration in Condition 1 times 600 kilograms of waste. Waste containing free liquids and solids shall be mixed prior to treatment. Any solids shall be maintained in a suspended state during transfer and treatment.

6. Envirocare shall require generators to provide the following information for each waste stream:

Pre-shipment

a. Waste Description. The description must detail how the waste was generated, list the physical forms in the waste, and identify uranium chemical composition.

b. Waste Characterization Summary. The data must include a general description of how the waste was characterized (including the volumetric extent of the waste, and the number, location, type, and results of any analytical testing), the range of SNM concentrations, and the analytical results with error values used to develop the concentration ranges.

c. Uniformity Description. A description of the process by which the waste was generated showing that the spatial distribution of SNM must be uniform, or other information supporting spatial distribution.

d. Manifest Concentration. The generator must describe the methods to be used to determine the concentrations on the manifests. These methods could include direct measurement and the use of scaling factors. The generator must describe the uncertainty associated with sampling and testing used to obtain the manifest concentrations.

Envirocare shall review the above information and, if adequate, approve in writing this pre-shipment waste characterization and assurance plan before permitting the shipment of a waste stream. This will include statements that Envirocare has a written copy of all the information required above, that the characterization information is adequate and consistent with the waste description, and that the information is sufficient to demonstrate compliance with Conditions 1 through 4. Where generator process knowledge is used to demonstrate compliance with Conditions 1, 2, 3, or 4, Envirocare shall review this information and determine when testing is required to provide additional information in assuring compliance with the Conditions. Envirocare shall retain this information as required by the State of Utah to permit independent review.

At Receipt

Envirocare shall require generators of SNM waste to provide a written certification with each waste manifest that states that the SNM concentrations reported on the manifest do not exceed the limits in Condition 1, that the measurement uncertainty does not exceed the uncertainty value in Condition 1, and that the waste meets Conditions 2 through 4.

7. Sampling and radiological testing of waste containing SNM must be performed in accordance with the following: one sample for each of the first ten shipments of a waste stream; or one sample for each of the first 100 cubic yards of waste up to 1,000 cubic yards of a waste stream, and one sample for each additional 500 cubic yards of waste following the first ten shipments or following the first 1,000 cubic yards of a waste stream. Sampling and radiological testing of debris waste containing SNM (that is exempted from sampling by the State of Utah) can be eliminated if the SNM concentration is lower than one tenth of the limits in Condition 1.

8. Envirocare shall notify the NRC, Region IV office within 24 hours if any of the above conditions are not met, including if a batch during a treatment process exceeds the SNM concentrations of Condition 1. A written notification of the event must be provided within 7 days.

9. Envirocare shall obtain NRC approval prior to changing any activities associated with the above conditions.

Based on the staff's evaluation, the Commission has determined, pursuant to 10 CFR 70.14, that the exemption of above activities at the Envirocare disposal facility is authorized by law, and will not endanger life or property or the common defense and security and is otherwise in the public interest. Accordingly, by this Order, the Commission grants an exemption subject to the stated conditions. The exemption will become effective after the State of Utah has incorporated the above conditions into Envirocare's radioactive materials license. In addition, at that time, the Order transmitted in January 2003 will no longer be effective.

Pursuant to the requirements in 10 CFR part 51, the Commission has prepared an Environmental Assessment for the proposed action and has determined that the granting of this exemption will have no significant impacts on the quality of the human environment. This finding was noticed in the **Federal Register** on October 16, 2003 (68 FR 59645).

The request for the modifying the Order are available for inspection at NRC's Public Electronic Reading Room at <*http://www.nrc.gov/reading-rm/adams.html*> ML031950334. Staff's Environmental Assessment and Safety Evaluation Report may be obtained at the above web site using ML032691442 and ML032680942. Any questions with respect to this action should be referred to Anna H. Bradford, Environmental and Performance Assessment Branch, Division of Waste Management, Office of Nuclear Material Safety and Safeguards, U.S. Nuclear Regulatory Commission, Washington, DC 20555–0001. Telephone: (301) 415–5228, Fax: (301) 415–5397.

Dated at Rockville, Maryland this 16th day of December, 2003.

For the Nuclear Regulatory Commission.

Martin J. Virgilio,

Director, Office of Nuclear Material Safety and Safeguards.

[FR Doc. 03–31875 Filed 12–24–03; 8:45 am]

BILLING CODE 7590–01–P

NUCLEAR REGULATORY COMMISSION

Radiac Research Corp., Brooklyn, New York; Receipt of Request for Action Under 10 CFR 2.206

Notice is hereby given that by petition dated November 3, 2003, Mr. Michael B. Gerrard, representing Neighbors Against Garbage, *et al.* (petitioners), have requested that the Nuclear Regulatory Commission (NRC) take action with regard to Radiac Research Corporation Brooklyn, New York, a licensee with the New York State Department of Labor.

The petitioners requested that the NRC use its authority to protect the common defense and security under the Atomic Energy Act of 1954 to close the Radiac facility. As the basis for the request, the petitioner stated that the radioactive waste storage operation adjoining a hazardous waste transfer and storage operation at the Radiac Research Corporation in Brooklyn, New York represented a significant risk.

The request is being addressed pursuant to 10 CFR 2.206 of the Commission's regulations. The request has been referred to the Director of the Office of Nuclear Material Safety and Safeguards. As provided by Section 2.206, appropriate action will be taken on this petition within a reasonable time. A copy of the petition is available for inspection in the Agencywide Documents Access and Management System (ADAMS), which provides text

and image files of NRC's public documents. These documents may be accessed through the NRC's Public Electronic Reading Room on the Internet at *http://www.nrc.gov/reading-rm/adams.html.* If you do not have access to ADAMS or if there are problems in accessing the documents located in ADAMS, contact the NRC Public Document Room (PDR) Reference staff at 1–800–397–4209, 301–415–4737 or by email to *pdr@nrc.gov.*

Dated at Rockville, Maryland this 17th day of December, 2003.

For the U.S. Nuclear Regulatory Commission.

Martin J. Virgilio,

Director, Office of Nuclear Material Safety and Safeguards.

[FR Doc. 03–31874 Filed 12–24–03; 8:45 am]

BILLING CODE 7590–01–P

NUCLEAR REGULATORY COMMISSION

Regulatory Guide; Issuance, Availability

The Nuclear Regulatory Commission (NRC) has issued a revision of a guide in its Regulatory Guide Series. This series has been developed to describe and make available to the public such information as methods acceptable to the NRC staff for implementing specific parts of the NRC's regulations, techniques used by the staff in its review of applications for permits and licenses, and data needed by the NRC staff in its review of applications for permits and licenses.

Revision 2 of Regulatory Guide 1.138, ''Laboratory Investigations of Soils and Rocks for Engineering Analysis and Design of Nuclear Power Plants,'' describes field investigations and testing practices acceptable to the NRC staff for for determining soil and rock properties and characteristics needed for engineering analysis and design for foundations and earthworks for nuclear power plants.

Comments and suggestions in connection with items for inclusion in guides currently being developed or improvements in all published guides are encouraged at any time. Written comments may be submitted to the Rules and Directives Branch, Division of Administrative Services, Office of Administration, U.S. Nuclear Regulatory Commission, Washington DC 20555. Questions on the content of this guide may be directed to Mr. Y. Li, (301) 415–4141; email *yxl1@nrc.gov.*

Regulatory guides are available for inspection or downloading at the NRC's Web site at *http://www.nrc.gov* under Regulatory Guides and in NRC's Electronic Reading Room (ADAMS System) at the same site. Single copies of regulatory guides may be obtained free of charge by writing the Reproduction and Distribution Services Section, U.S. Nuclear Regulatory Commission, Washington, DC 20555–0001, or by fax to (301) 415–2289, or by e-mail to *distribution@nrc.gov.* Issued guides may also be purchased from the National Technical Information Service (NTIS) on a standing order basis. Details on this service may be obtained by writing NTIS at 5285 Port Royal Road, Springfield, VA 22161; telephone 1–800–553–6847; *http://www.ntis.gov/.* Regulatory guides are not copyrighted, and Commission approval is not required to reproduce them. (5 U.S.C. 552(a))

Dated at Rockville, Maryland, this 16th day of December 2003.

For the Nuclear Regulatory Commission.

Ashok C. Thadani,

Director, Office of Nuclear Regulatory Research.

[FR Doc. 03–31873 Filed 12–24–03; 8:45 am]

BILLING CODE 7590–01–P

SECURITIES AND EXCHANGE COMMISSION

Sunshine Act Meeting

Notice is hereby given, pursuant to the provisions of the Government in the Sunshine Act, Pub. L. 94–409, that the Securities and Exchange Commission will hold the following meeting during the week of December 22, 2003:

A Closed Meeting will be held on Tuesday, December 23, 2003 at 2 p.m.

Commissioner Atkins, as duty officer, determined that no earlier notice thereof was possible.

Commissioners, Counsel to the Commissioners, the Secretary to the Commission, and recording secretaries will attend the Closed Meeting. Certain staff members who have an interest in the matter may also be present.

The General Counsel of the Commission, or his designee, has certified that, in his opinion, one or more of the exemptions set forth in 5 U.S.C. 552b(c) (5), (7), and (10) and 17 CFR 200.402(a) (5), (7), and (10), permit consideration of the scheduled matter at the Closed Meeting.

Commissioner Atkins, as duty officer, voted to consider the item listed for the closed meeting in closed session.

The subject matter of the Closed Meeting scheduled for Tuesday, December 23, 2003 will be: Settlement of an injunctive action.

At times, changes in Commission priorities require alterations in the scheduling of meeting items. For further information and to ascertain what, if any, matters have been added, deleted or postponed, please contact:

The Office of the Secretary at (202) 942–7070.

Dated: December 23, 2003.

Jonathan G. Katz,

Secretary.

[FR Doc. 03–32027 Filed 12–23–03; 1:44 pm]

BILLING CODE 8010–01–P

SECURITIES AND EXCHANGE COMMISSION

[Release No. 34–48948; File No. SR–Amex–2003–105]

Self-Regulatory Organizations; Notice of Filing of Proposed Rule Change by the American Stock Exchange LLC Relating to the Exceptions to the Exchange's Firm Quote Rule

December 18, 2003.

Pursuant to section 19(b)(1) of the Securities Exchange Act of 1934 (''Act''),[1] and Rule 19b–4 thereunder,[2] notice is hereby given that on December 1, 2003, the American Stock Exchange LLC (''Amex'' or ''Exchange'') filed with the Securities and Exchange Commission (''SEC'' or ''Commission'') the proposed rule change as described in Items I, II, and III below, which Items have been prepared by the Exchange. The Commission is publishing this notice to solicit comments on the proposed rule change from interested persons.

I. Self-Regulatory Organization's Statement of the Terms of Substance of the Proposed Rule Change

The Amex proposes to amend Rule 958A to eliminate the application of the Rule's exceptions to different series within the same option class. The text of the proposed rule change is set forth below in its entirety. Proposed deletions are in brackets.

* * * * *

Rule 958A Application of the Firm Quote Rule

(a) through (b) No change

(c) *Obligations of a Responsible Broker or Dealer*—(i) No change.

(ii) No responsible broker or dealer shall be obligated to execute a transaction for any listed options as provided in paragraph (c)(i) when:

(A)(1) Prior to the presentation of an order to sell (buy), a responsible broker

[1] 15 U.S.C. 78s(b)(1).

[2] 17 CFR 240.19b–4.

or dealer has communicated to the exchange, a revised quotation size;

(2) At the time an order to sell (buy) is presented, a responsible broker or dealer is in the process of effecting a transaction in such [class and/or] series of option, and immediately after the completion of such transaction it communicates to the Exchange a revised quotation size, such responsible broker or dealer shall not be obligated by paragraph (c)(i) of this Rule to sell (buy) that option in an amount greater than such revised quotation size;

(3) Before the order sought to be executed is presented, a responsible broker or dealer has communicated to the Exchange a revised bid or offer; or

(4) At the time the order sought to be executed is presented, a responsible broker or dealer is in the process of effecting a transaction in such [class and/or] series of option, and, immediately after the completion of such transaction, a responsible broker or dealer communicates to the exchange a revised bid or offer; provided, however, that the responsible broker or dealer shall nonetheless be obligated to execute any such order as provided in paragraph (c)(i) at its revised bid or offer in any amount up to its published quotation size or revised quotation size; or

(B) No change.

(d) No change.

* * * * *

II. Self-Regulatory Organization's Statement of the Purpose of, and Statutory Basis for, the Proposed Rule Change

In its filing with the Commission, the Amex included statements concerning the purpose of and basis for the proposed rule change and discussed any comments it received on the proposed rule change. The text of these statements may be examined at the places specified in Item IV below. The Amex has prepared summaries, set forth in Sections A, B, and C below, of the most significant aspects of such statements.

A. Self-Regulatory Organization's Statement of the Purpose of, and the Statutory Basis for, the Proposed Rule Change

1. Purpose

In November 2000, the Commission determined to impose market-wide firm quote obligations on the options markets effective April 1, 2001.[3] Rule 11Ac1–1 under the Act (known as the Quote Rule) requires all national securities exchanges to establish procedures for collecting from their members and making available to quotation vendors, bids, offers and quotation sizes with respect to reported securities. It also requires that quotation information be ''firm'' for the disseminated size, subject to certain exceptions. In applying the Quote Rule to the options markets, the SEC required the options exchanges to amend their rules to conform to the requirements of the Quote Rule. The Amex amended Rule 958A as required and received final SEC approval of the amendments in June 2001.[4]

The purpose of the Quote Rule is to make information on prices, volume and quotes for securities in all markets available to all investors so that they can make informed investment decisions. However, the SEC also recognized that the rule needs to prevent responsible brokers or dealers from being required to execute more than one order on the basis of the disseminated bid or offer and that the responsible brokers or dealers need sufficient time to update their quotations following completion of a transaction. Thus, in conforming Amex Rule 958A to the Quote Rule, the Amex included two exceptions, among others, from SEC Rule 11Ac1–1, with revisions to clarify the manner in which the Amex planned to interpret and enforce the Quote Rule in its options market.

The Quote Rule exceptions provide that the specialist would be relieved of his obligation to effect transactions at his published bid or published offer if (i) before an order is presented for execution, the specialist has communicated to the Exchange a revised bid or offer superseding his published bid or offer (a ''revised bid or offer'') or, (ii) at the time an order is presented, the specialist is in the process of effecting a transaction in that security, and, immediately after the completion of such transaction, he communicates a revised bid or offer to the Exchange.[5]

The exceptions to the Quote Rule as set forth in Rule 11Ac1–1(c)(3) apply to ''subject security'' and it was unclear at the time the Amex amended Rule 958A whether the exceptions applied to an option class, option series or both. The definition of subject security found in Rule 11Ac1–1 suggests both.[6] As a result, in order to clarify its understanding of the scope of the exceptions, the Amex specified in its amendment to Rule 958A that the exceptions would apply to the entire class as well as each individual series in an option class. Thus, pursuant to the exceptions set forth in Amex Rule 958A(c)(ii), the specialist and registered options traders, as responsible brokers or dealers, are not required to execute more than one order at their published bid or offer in that series or in any series within that option class. The period of time within which the specialist and registered options traders are relieved of their obligation to effect additional transactions at the published bid or offer would begin to run for all series in a given option class whenever a transaction was being effected in any one of the series in that option class.

The Exchange believed at the time it filed its amendments to Rule 958A and continues to believe that the exceptions should apply to the entire class as well as each individual series in a given option class. It is appropriate to allow the exceptions to apply to the entire class as an effective way for specialists and registered options traders to manage their overall risk in an option class. In determining competitive quotes and sizes for each series, specialists and registered options traders take into consideration their overall risk in the option class. If there is a change in the price of the underlying stock or an execution in one series, the specialist and registered options trader will seek to re-quote all series in that class. The exceptions provide specialists with the ability to update quotes on a timely basis without having to be firm to multiple orders in different series within the same class submitted simultaneously by one or more market participants. Given the numerous series within each option class that are traded by the Exchange,[7] the requirements for specialists to make two-sided markets

[3] *See* Securities Exchange Act Release No. 43591 (November 17, 2000), 65 FR 75450 (December 1, 2000).

[4] *See* Securities Exchange Act Release No. 44383 (June 1, 2001), 66 FR 30959 (June 8, 2001).

[5] In the Quote Rule adopting Release the SEC further clarified the second exception by stating ''[a] responsible broker or dealer should be deemed to be in the process of effecting a transaction from the moment an order is presented to him for execution until the completion of communication of all information necessary to complete the transaction.'' *See* Securities Exchange Act Release No. 14415 (January 26, 1978), 43 FR 4342 (February 1, 1978), at footnote 33.

[6] The term subject security is defined in subparagraph (a)(25) of Rule 11Ac1–1 as an ''exchange-traded security'' meeting certain executed volume thresholds. An ''exchange-traded security'' is defined in subparagraph (a)(10) as any ''covered security'' or ''class of covered securities'' listed or registered on an exchange. A ''covered security'' is defined in subparagraph (a)(6) and means any ''reported security,'' which is defined in subparagraph (a)(20) and means any security or class of securities.

[7] For a typical equity option class, the Exchange initially lists 24 series, that is, both puts and calls in four expiration months with three strike prices within each expiration month. As the underlying stock price moves, additional series are added. Options on volatile stocks can have well over 100 different series trading at any given time.

with size in each series, and the dependence upon a limited supply of stock available to hedge risk taken by specialists and registered options traders who submit narrow quotes in large size for each series within an option class it was believed to be appropriate for the Exchange to apply the exception to the class as well as the series. In addition, the Exchange's surveillance and enforcement program for the options Quote Rule was designed based upon the rule text as approved and the interpretation that would allow specialists and registered options traders to avail themselves of the exceptions to the Quote Rule for all series within a class after having received an order in one series in that option class.

However, in recent discussions with SEC staff regarding the Amex's enforcement of the Quote Rule for options, the Exchange has been advised that the exceptions should only be applied on a series-by-series basis. The SEC staff has, therefore, requested that the Amex amend Rule 958A to eliminate the exception for the entire class. The Amex is submitting this proposed rule change in compliance with that request.

2. Statutory Basis

The proposed rule change is consistent with section 6(b) of the Act [8] in general and furthers the objectives of section 6(b)(5) of the Act [9] in particular in that it is designed to prevent fraudulent and manipulative acts and practices and to promote just and equitable principles of trade.

B. Self-Regulatory Organization's Statement on Burden on Competition

The Exchange does not believe that the proposed rule change will impose any burden on competition.

C. Self-Regulatory Organization's Statement on Comments on the Proposed Rule Change Received From Members, Participants or Others

No written comments were solicited or received with respect to the proposed rule change.

III. Date of Effectiveness of the Proposed Rule Change and Timing for Commission Action

Within 35 days of the date of publication of this notice in the **Federal Register** or within such longer period (i) as the Commission may designate up to 90 days of such date if it finds such longer period to be appropriate and publishes its reasons for so finding or (ii) as to which the Exchange consents, the Commission will:

A. by order approve such proposed rule change, or

B. institute proceedings to determine whether the proposed rule change should be disapproved.

IV. Solicitation of Comments

Interested persons are invited to submit written data, views, and arguments concerning the foregoing, including whether the proposed rule change is consistent with the Act. Persons making written submissions should file six copies thereof with the Secretary, Securities and Exchange Commission, 450 Fifth Street, NW., Washington, DC 20549–0609. Comments should be submitted electronically at the following e-mail address: *rule-comments@sec.gov.* All comment letters should refer to File No. SR–Amex–2003–105. This file number should be included on the subject line if e-mail is used. To help the Commission process and review your comments more efficiently, comments should be sent in hard copy or by e-mail but not by both methods. Copies of the submission, all subsequent amendments, all written statements with respect to the proposed rule change that are filed with the Commission, and all written communications relating to the proposed rule change between the Commission and any person, other than those that may be withheld from the public in accordance with the provisions of 5 U.S.C. 552, will be available for inspection and copying in the Commission's Public Reference Room. Copies of such filing will also be available for inspection and copying at the principal office of the Exchange. All submissions should refer to File No. SR–Amex–2003–105 and should be submitted by January 20, 2004.

For the Commission, by the Division of Market Regulation, pursuant to delegated authority.[10]

Margaret H. McFarland,

Deputy Secretary.

[FR Doc. 03–31803 Filed 12–24–03; 8:45 am]

BILLING CODE 8010–01–P

[8] 15 U.S.C. 78f(b).

[9] 15 U.S.C. 78f(b)(5).

[10] 17 CFR 200.30–3(a)(12).

SECURITIES AND EXCHANGE COMMISSION

[Release No. 34–48950; File No. SR–CBOE–2003–55]

Self-Regulatory Organizations; Notice of Filing of Proposed Rule Change and Amendment No. 1 Thereto by the Chicago Board Options Exchange, Inc. To Amend Provisions of its Constitution and Rules Pertaining to the Governance of the Exchange

December 18, 2003.

Pursuant to section 19(b)(1) of the Securities Exchange Act of 1934 (''Act''),[1] and Rule 19b–4 thereunder,[2] notice is hereby given that on November 19, 2003, the Chicago Board Options Exchange, Inc. (''CBOE'' or ''Exchange'') filed with the Securities and Exchange Commission (''Commission'') the proposed rule change as described in Items I, II, and III below, which Items have been prepared by the CBOE. On December 11, 2003, CBOE submitted Amendment No. 1 to the proposed rule change. The Commission is publishing this notice to solicit comments on the proposed rule change, as amended, from interested persons.

I. Self-Regulatory Organization's Statement of the Terms of Substance of the Proposed Rule Change

CBOE proposes to amend various provisions of its Constitution and Rules pertaining to the governance of the Exchange. The text of the proposed rule change appears below. Added text is in italics. Deleted text is in brackets.

Chicago Board Options Exchange, Incorporated Constitution

Article I

Definitions

Section 1.1 When used in this Constitution, except as expressly otherwise provided or unless the context otherwise requires:

(a) The term ''Exchange'' means the Chicago Board Options Exchange, Incorporated or its exchange market.

(b) The term ''member'' means an individual member or a member organization of the Exchange (or a registered nominee of such a member organization) that is a regular member in good standing described in Section 2.1(b) of Article II of the Constitution.

(c) The term ''member organization'' means a partnership or corporation which owns *or leases* a membership, or a partnership or corporation for which a membership is registered in

[1] 15 U.S.C. 78s(b)(1).

[2] 17 CFR 240.19b–4.

accordance with Section 2.4 of Article II of the Constitution.

(d) The term ''Board'' means the Board of Directors of the Exchange.

(e) The term ''Rules'' means the rules of the Exchange as adopted or amended from time to time.

Article II

Membership

Section 2.1 Number of Memberships

(a) Membership in the Exchange shall be made available by the Exchange at such times, under such terms and in such number as shall be proposed by the Board and approved by the affirmative vote of the majority of *voting* [the] members present in person or represented by proxy at a regular or special meeting of the membership. Such an affirmative vote by the members shall be required for the issuance of all new memberships, whether regular or special, whether having expanded or limited rights, whether designated memberships or permits or as a classification using any other description, which grant the holders thereof the right to enter into securities transactions at the Exchange.

(b) The regular membership of the Exchange shall consist of persons who acquire regular memberships made available by the Exchange in accordance with the Rules, and shall also consist of those members of the Board of Trade of the City of Chicago who, pursuant to paragraph (b) of Article FIFTH of the Certificate of Incorporation, elect to apply for membership and are approved for membership in accordance with the Rules. Except as otherwise expressly provided in the Certificate of Incorporation, the Constitution or the Rules, every regular member of the Exchange shall be entitled to the same rights and privileges, and shall be subject to the same obligations, as every other regular member.

(c) [Reserved for special memberships.]

(d)(1) Seventy-five ''Options Trading Permits'' (''Permits'') shall be issued or made available for leasing in accordance with the Rules. All Permits shall expire, and all rights of their holders shall cease, on the seventh anniversary of the date determined pursuant to agreement between the Exchange and the New York Stock Exchange (''NYSE'') on which trading begins on the floor of the Exchange in options that were listed on the NYSE.

(2) Permit holders shall have no right to petition or to vote at Exchange membership meetings or elections or to be counted as part of a quorum, shall have no interest in the assets or property of the Exchange and no right to share in any distribution by the Exchange, and shall have none of the other rights or privileges accorded members under any provision of the Constitution and Rules other than those specified in the Rules.

Section 2.2 Eligibility for Membership; Good Standing

Membership shall be limited to individuals, partnerships and corporations, subject to their meeting the conditions of approval as stated in the Constitution and Rules. Members must have as the principal purpose of their membership the conduct of a public securities business as defined in the Rules.

The good standing of a member may be suspended, terminated or otherwise withdrawn, as provided in the Rules, if any of said conditions for approval cease to be maintained or the member violates any of its agreements with the Exchange or any of the provisions of the Constitution or the Rules. Unless a member is in good standing, the member shall have no rights or privileges of membership except as otherwise provided by statute, the Certificate of Incorporation, the Constitution or the Rules, shall not hold himself or itself out for any purpose as a member, and shall not deal with the Exchange on any basis except as a non-member.

Section 2.3 Nominees of Member Organizations

Every applicant for membership as a member organization and every member organization shall, in accordance with the Rules, designate an individual nominee with respect to each membership owned *or leased* by it, who shall be subject to the same requirements for approval as if he were himself applying for membership as an individual member and shall be authorized to represent the organization in all matters relating to the Exchange.

Section 2.4 Registration of Individual Memberships for Member Organizations

Every individual member or applicant who is or intends to become an executive officer, director, principal shareholder or general partner of an organization engaged or proposing to engage in business as a broker or dealer in options may apply to register his membership for such organization. Additional individual members may register their memberships for a member organization in accordance with the Rules. Such organization shall be subject to the same requirements for approval as if it were itself applying for membership as a member organization, except that the individual member so applying shall represent the organization in lieu of a nominee. Registration of an individual membership for an organization may be withdrawn by the Exchange for any reason which would justify withdrawal of the approval of either the individual or the organization for membership.

Section 2.5 Acquisition and Transfer of Memberships

Memberships acquired pursuant to paragraph (b) of Article FIFTH of the Certificate of Incorporation shall not be transferable. All other memberships may be offered for sale and transferred by the owners thereof, or under certain circumstances by the Exchange, as provided in the Rules.

Section 2.6 Voting and Other Rights and Powers

Each regular member shall have the voting rights and power provided by law and by the Certificate of Incorporation and the Constitution.

Article III

Meetings of Members

Section 3.1 Place of Meetings

Each meeting of the members shall be held at such a place, within or without the State of Delaware, as the *Secretary* [Board] may designate prior to the giving of notice of such meeting, but if no such designation is made, then on the *fourth* floor of the Exchange.

Section 3.2 Annual Election Meeting

An annual election meeting of members shall be held on the *1st business day preceding the* 3rd Friday in November of each year [unless such day is a legal holiday, in which case on the next succeeding business day which is not a legal holiday], at such time as may be designated by the *Secretary* [Board] prior to the giving of notice of the meeting, for the purpose of electing directors to fill expiring terms and any vacancies in unexpired terms and electing members of the Nominating Committee to fill expiring terms and any vacancies in unexpired terms.

Section 3.3 Annual Report Meeting

An annual report meeting of members shall be held within 120 days following the end of the Exchange's fiscal year, at a time as determined by the *Secretary* [Board], for the purpose of *presentation of the Exchange's annual report as provided for in Section 6.11 of the Constitution* [transacting such business as may properly be brought before the meeting].

Section 3.4 Special Meetings

Special meetings of members, for any purpose or purposes, unless otherwise prescribed by statute or by the Certificate of Incorporation, may be called by the Chairman of the Board, the Vice Chairman of the Board or the Board of Directors, and shall be called by the Secretary at the request in writing of 150 voting members, provided that such request shall state the purpose or purposes of the proposed meeting and the day and hour at which such meeting shall be held.

Section 3.5 Notice of Members' Meetings

Unless otherwise prescribed by statute, the Certificate of Incorporation, the Constitution or the Rules, written notice of each meeting of members *at which a vote of members is to be taken*, stating the date, time and place thereof, and, in the case of special meetings, the purpose or purposes for which such meeting is called, shall be *given* [delivered] to each member entitled to vote thereat not more than 60 days and at least 10 days before the date of the meeting.

Section 3.6 Quorum and Adjournments

Except as otherwise provided by statute, the Certificate of Incorporation or the Constitution, a majority of the members entitled to vote, when present in person or represented by proxy, shall constitute a quorum at all meetings of members for the transaction of business, provided that in respect to uncontested elections, one-third of the members entitled to vote, when present in person or represented by proxy, shall constitute a quorum. If such quorum shall not be present or represented by proxy at any meeting of members, a majority of the members present in person or represented by proxy at the meeting shall have power to adjourn the meeting from time to time, without notice other than announcement at the meeting unless otherwise required by statute, until a quorum shall be present or represented. At any such adjourned meeting at which a quorum is present, any business may be transacted which might have been transacted at the meeting as originally notified. Nothing in the Constitution shall affect the right to adjourn a meeting from time to time where a quorum is present.

Section 3.7 Voting by Members

With respect to any question brought before a meeting, when a quorum is present, a majority of voting members present in person or represented by proxy shall decide the question, unless the question is one upon which by express provision of statute, the Certificate of Incorporation or the Constitution, a different vote is required, in which case such express provision shall govern and control. Voting on any question brought before any meeting of members shall be, so far as applicable, in accordance with the procedure provided by Article V of the Constitution for the conduct of the annual election.

Section 3.8 Determination of Members of Record

(a) The Board of Directors may fix a record date to determine the members entitled to notice of and to vote at a meeting of the members or any adjournment thereof (''Record Date''). The Record Date shall not be more than 60 days nor less than 10 days before the date of the meeting.

(b) If no Record Date is fixed by the Board of Directors for a meeting of members, the Record Date for the meeting shall be at the close of business on the day preceding the date on which notice of the meeting is given by the Exchange.

(c) A Record Date shall apply to any adjournment of a meeting of members; provided, however, that the Board of Directors may fix a new Record Date for the adjourned meeting.

Article IV

Nominations

Section 4.1 Nominating Committee

(a) There shall be a Nominating Committee composed of four members who are primarily engaged in business on the floor of the Exchange in the capacity of a member (floor members); two *persons* [members] who are officers of member organizations that primarily conduct a non-member public customer business (firm members); two *persons* [members] each of whom directly or indirectly owns and controls (as defined in Section 6.1(a)) one or more memberships in respect of which he acts solely as lessor (lessor members), at least one of whom is not actively engaged in business as a ''broker-dealer'' or as a ''person associated with a broker-dealer'' as those terms are defined in the Securities Exchange Act of 1934; and two representatives of the public (public members).

(b) All of the members of the Nominating Committee shall be elected by the voting members of the Exchange. [In the 1999 annual election meeting, one floor member shall be elected for a three year term, and two firm members, two lessor members and two public members shall be elected, one firm member, one lessor member and one public member for terms expiring at the second annual election meeting following the 1999 annual election meeting, and one firm member, one lessor member and one public member for terms expiring at the third annual election meeting following the 1999 annual election meeting. In the 2000 annual election meeting, one floor member shall be elected for a three year term.] At each [subsequent] annual election meeting, members of the Nominating Committee shall be elected to succeed those whose terms expire, each to serve for a term expiring at the third succeeding annual election meeting and until their successors are duly elected and qualified *or until their earlier death, resignation or removal.* Elected members of the Nominating Committee shall be ineligible for reelection for a period of three years after their terms expire*; provided that this limitation shall not apply to any member of the Nominating Committee whose most recent term on the Nominating Committee was less than three years.*

Section 4.2 Nominating Committee Vacancies

Any vacancy occurring among the members of the Nominating Committee may be filled by a qualified person appointed by the Vice Chairman of the Board with the approval of the Board [to hold office until the next annual election meeting, at which time a qualified successor shall be elected to serve the unexpired term, if any, of his predecessor in office]. *The term of any Nominating Committee member so chosen shall be from the date of appointment until the next annual election meeting and until the person's successor is duly elected and qualified or until the person's earlier death, resignation or removal. The remaining portion of the unexpired term of a Nominating Committee member, if any, shall be served by a person elected at the next annual election meeting.*

Section 4.3 Nominating Procedure

[During October of each year the] *The* Nominating Committee shall hold at least three meetings, at least two of which shall be open to the membership, for the purpose of selecting not less than one nominee for each of the following offices to be voted upon at the following annual election meeting:

(a) Directors to fill expiring terms and vacancies.

(b) Nominating Committee members to fill expiring terms and vacancies.

The Nominating Committee shall select nominees to fulfill the

requirements of Sections 6.1 and 4.1 of the Constitution with an obligation to have the various interests of the membership represented on the Board and the Nominating Committee, respectively.

Notice of each of the meetings of the Nominating Committee shall be posted on the *Exchange* bulletin board [on the floor of the Exchange].

The Nominating Committee shall post its nominees of Directors and Nominating Committee members on the Exchange bulletin board not later than October 10th, or the first business day thereafter if October 10th is not a business day.

Section 4.4 Replacement Nominees

In the event any nominee named by the Nominating Committee withdraws or becomes ineligible, the Nominating Committee may select an additional qualified nominee to replace the withdrawn or ineligible nominee, and it shall select an additional qualified nominee if, as a result of the withdrawal or ineligibility, there is not at least one nominee for each of the offices to be elected.

Section 4.5 Nomination by Petition

Nominations of candidates for election to the Board or the Nominating Committee may be made by petition, signed by not less than 100 voting members of the Exchange and filed with the Secretary no later than 5:00 p.m. (Chicago time) on the Monday preceding the 1st Friday in November, or the first business day thereafter in the event that Monday occurs on a holiday.

Section 4.6 Posting of Names of Nominees

Names of nominees and replacement nominees selected by the Committee and nominees named by petition shall, immediately following their selection, be given to the Secretary who shall promptly post them upon the *Exchange* bulletin board.

Section 4.7 Qualifications of Nominees

Candidates for election to the Board or the Nominating Committee, whether nominated by the Nominating Committee or by petition, shall be eligible for election in any of the categories for which they qualify both at the time of their nomination and at the time of their election. The sole judge of whether a candidate satisfies the applicable qualifications for election to the Board or the Nominating Committee in a designated category shall be the Nominating Committee in the case of candidates nominated by that Committee, and shall be the Executive Committee in the case of candidates nominated by petition, and the decision of the respective committee shall be final.

Section 4.8 Qualifications of Nominating Committee Members

Following election or appointment to the Nominating Committee, each Nominating Committee member must continuously satisfy the applicable qualifications for service on the Nominating Committee. The sole judge of whether a Nominating Committee member satisfies the applicable qualifications for service on the Nominating Committee shall be the Board of Directors. Notwithstanding the foregoing, a member of the Nominating Committee who fails to maintain the applicable qualifications will be allowed 45 days from the date when the Board determines the Nominating Committee member is unqualified in which to requalify. During any such period up until the time when the Nominating Committee member requalifies, the Nominating Committee member shall be deemed not to hold office and the seat formerly held by the Nominating Committee member shall be deemed to be vacant for all purposes. The Board of Directors shall be the sole judge of whether the Nominating Committee member has requalified.

Section 4.9 Removal of Nominating Committee Members

In the event of the refusal, failure, neglect, or inability of any Nominating Committee member to discharge that person's duties, or for any cause affecting the best interests of the Exchange, the sufficiency of which the Board of Directors shall be the sole judge, the Board shall have the power, by the affirmative vote of at least two-thirds of the Directors then in office, to remove that Nominating Committee member from the Committee.

Article V

Conduct of Annual Election

Section 5.1 Election Committee

The Vice Chairman of the Board, with the approval of the Board, shall appoint not less than three tellers, none of whom may be a member of the Exchange or a partner or officer of a member organization, who shall constitute a Committee to conduct the annual election. The Committee shall have authority to decide all questions pertaining to the conduct of the annual election, and its decision shall be final.

Section 5.2 Voting Procedure

(a) Immediately following the expiration of the time within which nominations may be made by petition, the Secretary shall prepare a ballot listing all candidates nominated for offices to be voted upon at the annual election, the order of the listing to be determined by lot. A ballot, a form of proxy, an envelope marked ''For Ballot Only'' and a return envelope shall be mailed by the Secretary to each member eligible to vote, together with the notice of the annual election. Members may vote, either in person or by proxy, by marking the ballot which shall remain unsigned and sealing the same in the unmarked ballot envelope. Members desiring to vote by proxy shall mail *or deliver* the sealed ballot, accompanied by a signed proxy card, to the Secretary so that it is received by the Secretary prior to the election. At the election, members voting in person shall deliver their sealed ballot envelopes to at least two members of the Election Committee, who shall keep a list of the members voting and shall place the sealed ballot envelopes in the ballot box. [Following the completion of voting in person, the] *The* Secretary shall deliver to the Election Committee all of the proxies, each with its accompanying sealed ballot envelope. At least two members of the Election Committee shall check the names of the members voting by proxy on the voting list, file the proxies, and place the sealed ballot envelopes in the ballot box.

(b) The Exchange may permit electronic submission of ballots and proxies, or implement a confidential electronic voting process, in a form and manner prescribed by the Exchange. The Exchange may modify the procedures in paragraph (a) of this Section to accommodate electronically submitted voting materials and votes.

Section 5.3 Counting of Ballots

Following the conclusion of the annual election meeting, the Election Committee shall count all of the properly submitted votes. [When all of the ballots properly submitted at the election have been placed in the ballot box, members of the Election Committee shall open the ballot box and the sealed ballot envelopes, and shall count the ballots.] A plurality of the votes shall elect the directors; provided, however, that where a plurality of votes cast would not elect the number of directors from each of the categories specified in Section 6.1, then the specified number of candidates from each of such categories who receive the highest votes among all those candidates in each such

category shall be elected in lieu of those candidates who receive what would otherwise be the lowest winning pluralities. A plurality of the votes shall elect the members of the Nominating Committee; provided, however, that in the same manner as described above for the election of directors, in any case where a plurality of votes cast would not elect the number of members of the Nominating Committee from each of the categories specified in Section 4.1, then the specified number of candidates in each such category who receive the highest votes among all candidates in that category shall be elected. The Election Committee shall cause election results to be posted on the *Exchange* bulletin board [on the floor of the Exchange].

Article VI

Board of Directors

Section 6.1 Number, Election and Term of Office of Directors

(a) The Board of Directors shall consist of 22 Directors as described below and the Chairman of the Board, who by virtue of his office shall be a member of the Board. The Directors elected by the membership shall be divided into three classes which, commencing with the 2002 annual election meeting, shall be composed as follows: [1]

Class I shall consist of one member who directly or indirectly owns and controls a membership and is primarily engaged in business on the floor of the Exchange in the capacity of a member (floor director), one *person* [member] who directly or indirectly owns and controls a membership with respect to which he acts solely as lessor and who is not actively engaged in business as a ''broker-dealer'' or as a ''person associated with a broker-dealer'' as those terms are defined in the Securities Exchange Act of 1934, (lessor director), and three *persons who are not members and* [non-members] who are not broker-dealers or persons affiliated with broker-dealers (public directors).

Class II shall consist of one floor director, one *person* [member] who functions as a member in any recognized capacity either individually or on behalf of a member organization (at-large director), two *persons* [members] who are executive officers of member organizations that primarily conduct a non-member public customer business and are not individually engaged in business on the Exchange floor (off-floor directors) and four public directors.

Class III shall consist of two floor directors, one at-large director, two off-floor directors and four public directors.

The ordinary place of business of at least one of the two off-floor directors in each Class shall be a location more than 80 miles from the Exchange's trading floor.

For purposes of this Section 6.1, a *person* [member] shall be considered to directly own and control a membership only if the *person* [member] individually and directly owns of record and beneficially all right, title and interest in the membership, and a *person* [member] shall be considered to indirectly own and control a membership only if the *person* [member] (A) has the sole and exclusive right to vote the membership and control its sale, and (B) is in possession of and subject to all of the risks and rewards of a direct owner of at least a fifty percent (50%) interest in a membership, either through ownership of an equity interest in a member organization or of a beneficial interest in a trust, which in either case is the owner of one or more memberships as permitted under the Rules.

(b) The terms of Class I, Class II and Class III directors shall terminate following the annual election meetings to be held in 2002, 2003 and 2004, respectively. At the 2002 annual election meeting, all of the Class I directors shall be elected for three-year terms, and directors shall be elected to fill vacancies in Classes II and III. At *each* [subsequent] annual election *meeting* [meetings], [the] directors [of each class] shall be elected for three year terms to succeed those whose terms are then about to expire, and they shall hold office for the terms for which elected and until their successors shall have been duly elected and qualified[,] or until their earlier death, resignation or removal. *The term of office of each director elected at an annual election meeting shall commence on January 1st of the year following that annual election meeting and shall continue until December 31st of the final year of the director's term of office.* [Terms of office of directors shall expire at the first regular meeting of the Board of Directors held on or after January 1 following the annual election meetings at which their successors are elected.]

Section 6.2 Powers of the Board

The Board of Directors shall be the governing body of the Exchange and shall be vested with all powers necessary for the management of the business and affairs of the Exchange and for the promotion of its welfare, objects and purposes. The Board shall regulate the business conduct of members and may exercise all such powers of the Exchange and do all such lawful acts and things as are not by statute, the Certificate of Incorporation, the Constitution or the Rules directed or required to be exercised or done by members. In the exercise of such powers, the Board may organize such subsidiary corporations, impose such fees and charges, adopt or amend such Rules, issue such orders and directions, and make such decisions as it deems necessary or appropriate. It may prescribe and impose penalties for violations of the Constitution or Rules, for neglect or refusal to comply with orders, directions or decisions of the Board, or for any other offenses against the Exchange.

Section 6.3 Resignation, Disqualification and Removal of Directors

(a) A Director may resign at any time by giving written notice of his resignation to the Chairman of the Board or the Secretary, and such resignation, unless specifically contingent upon its acceptance, will be effective as of its date or of the date specified therein.

(b) In the event (i) any Director other than a public director ceases to be a member or executive officer of a member organization or (ii) the number of Directors in any designated category within a Class falls below the number for that category and Class *(*as specified in Section 6.1*)* because of the failure of a Director to maintain the qualifications for the designated category, of which failure the Board of Directors shall be the sole judge, the Director shall thereupon cease to be a Director, his office shall become vacant and the vacancy may be filled [at the next scheduled meeting of] *by* the Board of Directors with a person who qualifies for the category in which the vacancy exists. [, provided that] *Notwithstanding the foregoing:*

(A) A Director who fails to maintain the applicable qualifications will be allowed the later of (i) 45 days from the date when the Board determines the Director is unqualified or (ii) until the next regular Board meeting following the date when the Board makes such determination, in which to requalify. During any such period up until the time when the Director requalifies, the Director shall be deemed not to hold office and the seat formerly held by the Director shall be deemed to be vacant for all purposes. The Board of Directors shall be the sole judge of whether the Director has requalified.

(*B*) A Director other than a public director whose membership is

suspended may remain a Director during the period of suspension unless he is removed pursuant to paragraph (c) of this Section.

(c) In the event of the refusal, failure, neglect or inability of any Director to discharge his duties, or for any cause affecting the best interests of the Exchange the sufficiency of which the Board of Directors shall be the sole judge, the Board shall have the power, by the affirmative vote of at least two-thirds of the Directors then in office, to remove such Director and declare his office vacant.

Section 6.4 Filling of Vacancies

Any vacancy in the Board of Directors resulting from a Director ceasing to hold office prior to the expiration of his term may be filled by a person who is qualified to *fill the position on* [serve in the category of] the Board in which the vacancy exists and who is appointed by the affirmative vote of a majority of the Directors then in office[,]. [and] *The term of* any Director so chosen shall [serve] *be from the date of appointment* until *December 31st of the year of appointment* [the next annual election meeting] and [until his] *the Director's* successor is duly elected and qualified *or until the Director's earlier death, resignation or removal.* The remaining portion of the unexpired term of a Director, if any, shall be served by a Director elected at such next annual election meeting.

Section 6.5 Quorum

At all meetings of the Board, two-thirds of the number of Directors then in office shall constitute a quorum for the transaction of business, and the vote of a majority of the Directors present at any meeting at which a quorum is present shall be the act of the Board, except as may be otherwise specifically provided by statute, the Certificate of Incorporation, the Constitution or the Rules. If a quorum shall not be present at any meeting of the Board, a majority of the Directors present thereat may adjourn the meeting from time to time, without notice other than announcement at the meeting, until a quorum shall be present.

Section 6.6 Regular Meetings

Regular meetings of the Board shall be held at such time and at such place as shall from time to time be provided by resolution of the Board without notice other than such resolution.

Section 6.7 Special Meetings

Special meetings of the Board may be called by the Chairman of the Board or the Vice Chairman of the Board and shall be called by the Secretary upon the written request of any 4 Directors. The Secretary shall give at least one hour's notice of such meeting to each Director, either *in person, by mail, messenger, overnight courier, facsimile machine, electronic mail, telephone, or* by announcement on the Exchange floor during trading hours on business days[, or personally, or by mail, telegram or cablegram]. Every such notice shall state the time and place of the meeting which shall be fixed by the person calling the meeting, but need not state the purpose thereof except as otherwise required by statute, the Constitution or the Rules.

Section 6.8 Participation in Meeting

Members of the Board or of any committee may participate in a meeting of the Board or committee by conference telephone or similar communications equipment by means of which all persons participating in the meeting can hear each other, and such participation in a meeting shall constitute presence in person at such a meeting.

Section 6.9 Informal Action

Unless otherwise restricted by statute, the Certificate of Incorporation, the Constitution or the Rules, any action required or permitted to be taken at any meeting of the Board or of any committee may be taken without a meeting if all members of the Board or committee, as the case may be, consent thereto in writing, and the writing or writings are filed with the minutes of proceedings of the Board or of the committee.

Section 6.10 Interested Directors

No Director shall be disqualified from participating in any meeting, action or proceeding of the Board by reason of being or having been a member of a committee which has made prior inquiry, examination or investigation of the subject under consideration. No Director shall participate in the adjudication of any matter in which he is personally interested, although interested Directors may be counted in determining the presence of a quorum at the meeting of the Board or of a committee which authorizes actions with respect to such matter.

Section 6.11 Annual Report to Members

At each Annual Report Meeting of members, the Board shall present a complete report of the financial condition of the Exchange, including a statement of all receipts and expenditures for the preceding year.

Article VII

Committees

Section 7.1 Designation of Committees

The committees of the Exchange shall consist of an Executive Committee, an Audit Committee, a Compensation Committee, a Floor Directors Committee, and such other standing and special committees as may be provided in the Constitution or Rules or as may be from time to time appointed by the Vice Chairman of the Board with the approval of the Board. Except as may be otherwise provided in the Constitution or the Rules, the Vice Chairman of the Board with the approval of the Board shall appoint the members of all committees and may designate a Chairman and a Vice-Chairman thereof.

Section 7.2 The Executive Committee

The Executive Committee shall consist of the Chairman of the Board, the Vice Chairman of the Board, and at least 4 other persons appointed as provided in Section 7.1, each of whom must be a Director. Not less than 50% of the members of the Executive Committee (excluding the Chairman) shall be public directors. Members of the Executive Committee shall not be subject to removal except by the Board. The Chairman of the Board shall be the Chairman of the Executive Committee. Each member of this Committee shall be a voting member. The members of the Executive Committee shall serve for a term of one year expiring at the first regular meeting of Directors following the annual election meeting in each year. The Executive Committee shall have and may exercise all the powers and authority of the Board in the management of the business and affairs of the Exchange, except it shall not have the power or authority of the Board in reference to amending the Certificate of Incorporation, adopting an agreement of merger or consolidation, recommending to the members the sale, lease or exchange of all or substantially all of the Exchange's property and assets, recommending to the members the dissolution of the Exchange or a revocation of a dissolution, or amending the Constitution or Rules of the Exchange.

Section 7.3 The Audit Committee

The Audit Committee shall consist of at least three Directors appointed by the Chairman of the Board with the approval of the Board, the exact number to be determined from time to time by the Board. Not less than 50% of the members of the Audit Committee shall be public directors. Members of the Audit Committee shall not be subject to

removal except by the Board. The Chairman of the Audit Committee shall be a public director appointed by the Chairman of the Board. The Audit Committee shall have such duties and may exercise such authority as may be prescribed in the Constitution or Rules or by resolution of the Board.

Section 7.4 The Compensation Committee

The Compensation Committee shall consist of the Vice Chairman of the Board, the lessor director, the Chairman of the Financial Planning Committee, one or more off-floor directors, and such number of public directors that will constitute at least 50% of the members of the Committee. The off-floor director(s) and the public directors shall be appointed to the Compensation Committee by the Chairman of the Board with the approval of the Board. Members of the Compensation Committee shall not be subject to removal except by the Board. The Chairman of the Compensation Committee shall be a public director appointed by the Chairman of the Board. The Compensation Committee shall have such duties and may exercise such authority as may be prescribed in the Constitution or Rules or by resolution of the Board.

Section 7.5 The Floor Directors Committee

The Floor Directors Committee shall consist of those Directors who are primarily engaged in business on the floor of the Exchange (whether serving as floor directors or at-large directors), the lessor director as a non-voting member of the Committee, and such other persons as may be appointed as voting or nonvoting members of the Committee by the Vice Chairman of the Board with the approval of the Board. The Vice Chairman of the Board shall be the Chairman of the Floor Directors Committee. The Floor Directors Committee shall have such duties and may exercise such authority as may be prescribed in the Constitution or Rules or by resolution of the Board.

Section 7.6 Other

All other committees shall have such duties and may exercise such authority as may be prescribed for them in the Constitution or Rules or by resolution of the Board.

Section 7.7 Conduct of Proceedings

Except as otherwise provided in the Certificate of Incorporation, Constitution or Rules, or by resolution of the Board, each committee may determine the manner in which its proceedings shall be conducted. Committees shall keep minutes of their meetings and periodically report their proceedings to the Board of Directors *and appropriate committees of the Board to the extent requested by the Board or Board committee.*

Article VIII

Officers

Section 8.1 Designation; Number; Election

(a) The officers of the Exchange shall be a Chairman of the Board, a Vice Chairman of the Board, a President, one or more Vice-Presidents (the number thereof to be determined by the Board of Directors), a Secretary, a Treasurer, and such other officers as the Board may determine. The Chairman of the Board shall be elected by the affirmative vote of at least two-thirds of the Directors then in office exclusive of the Chairman, who shall not vote. Such affirmative vote may also prescribe his duties not inconsistent with the Constitution or Rules and may prescribe a tenure of office.

The Vice Chairman of the Board shall be a director who owns or directly controls his own membership and is primarily engaged in business on the floor of the Exchange in the capacity of a member. He shall be elected by a plurality of members voting at a meeting of the membership held on the *1st business day preceding the* 3rd Friday in December of each year [(or if that day is not a business day, on the next succeeding business day)] *to serve as Vice Chairman of the Board during the following year. The term of office of the Vice Chairman of the Board shall run from January 1st to December 31st of each year. Provided that the Vice Chairman of the Board remains qualified to serve in that office, he* [and] shall serve until *the expiration of his term in that office and* his successor is duly chosen and qualified or until his earlier death, [or his] resignation or removal. Once a director has held the office of the Vice Chairman of the Board for six months or more of a one-year term and for the next two succeeding one-year terms, the director shall thereafter be ineligible to again hold the office until a period of not less than six months has elapsed during which the director has not held that office. Candidates for the office of Vice Chairman of the Board must notify the Secretary of the Exchange in writing no later than the close of business on November 23rd (or if that day is not a business day, on the next succeeding business day). In the event there is only one candidate, no election need be held, and the Board of Directors shall declare the office filled by the sole announced candidate.

The remaining officers of the Exchange shall be appointed by the Chairman of the Board, subject to the approval of the Board, [at the first regular meeting of the Board of Directors held on or after January 1 following each annual election meeting,] each to serve until a successor has been duly chosen and qualified or until the officer's earlier death, [or] resignation or removal.

(b) No officer, other than the Vice Chairman of the Board, shall be a member or affiliated with a member or a broker or a dealer in securities or commodities. Two or more offices may be held by the same person, except the offices of Chairman of the Board and President, Chairman of the Board and Secretary, or President and Secretary may not be held by the same person. The compensation of all officers of the Exchange chosen by the Board shall be fixed by the Board.

Section 8.2 Chairman of the Board of Directors

The Chairman of the Board shall be the chief executive officer of the Exchange, responsible to the Board for the management of its business affairs, and shall be the official representative of the Exchange in all public matters. The Chairman shall not engage in any other business during his incumbency except with approval of the Board, and by his acceptance of the office of Chairman of the Board he shall be deemed to have agreed to uphold the Constitution and Rules of the Exchange. He shall by virtue of his office be a member and presiding officer of the Board of Directors and an ex-officio member, without a right to vote, of all committees, without prejudice to his being specifically appointed as a voting member of any committee.

Section 8.3 Vice Chairman of the Board

The Vice Chairman of the Board shall preside at meetings of the members. Subject to the approval of the Board, the Vice Chairman of the Board may appoint standing and special committees unless the method of appointment is otherwise provided for in the Constitution or Rules or in the resolution of the Board establishing the committee. The Vice Chairman of the Board shall be responsible for the coordination of the activities of all committees, with the exception of committees of the Board, including the Executive Committee, the Audit Committee and the Compensation

Committee. The Vice Chairman of the Board shall be an ex-officio member, without a right to vote, of all committees, without prejudice to being specifically appointed as a voting member of any committee. In the case of the absence or inability to act of the Chairman of the Board, or in case of a vacancy in the office of the Chairman of the Board, the Vice Chairman of the Board shall exercise the powers and discharge the duties of the Chairman of the Board.

Section 8.4 Acting Chairman *and Vacancy in Office of Chairman*

(a) In the absence or inability to act of both the Chairman of the Board and the Vice Chairman of the Board, the Board may designate an Acting Chairman of the Board. In the absence of such a designation by the Board, the President, or in his absence or inability to act, the senior available Vice-President, shall assume all the functions and discharge all the duties of the Chairman of the Board.

(b) If a vacancy occurs in the office of Chairman, the Board, by the affirmative vote of at least two-thirds of the Directors then in office, shall fill such vacancy pursuant to Section 8.1(a).

Section 8.5 Vacancy in Office of Vice Chairman of the Board

(a) If the Vice Chairman of the Board shall cease to satisfy the requirements for election to that office, *of which failure the Board of Directors shall be the sole judge,* he shall thereupon cease to hold his office and such office shall become vacant, provided that if his membership is suspended he may continue to hold office unless he is removed pursuant to paragraph (a) of Section 8.7.

(b) If a vacancy occurs in the office of Vice Chairman of the Board pursuant to paragraph (a) of this Section or if for any other reason the office becomes vacant, the Board, by the affirmative vote of a majority of the Directors then in office, shall fill such vacancy by the election to such office of a Director then in office who satisfies the requirements for election to such office.

Section 8.6 President

The President shall be the chief operating officer of the Exchange. The President shall, by virtue of his office, be an ex-officio member, without a right to vote, of all committees other than committees whose membership is limited to directors of the Exchange, without prejudice to his being specifically appointed as a voting member of any committee other than a committee limited to directors. Except as is otherwise provided in the Certificate of Incorporation, the Constitution or the Rules, the President shall have the power to employ and dismiss employees of the Exchange, and to establish their qualifications, duties, and salaries; he shall [execute] *approve, but may delegate the execution of,* all authorized contracts on behalf of the Exchange and shall perform such other duties as may be prescribed by the Board from time to time. The President shall not engage in any other business during his incumbency as President, *except with approval of the Board.* [and by] *By* his acceptance of the office of President, he shall be deemed to have agreed and he shall have agreed to uphold the Constitution and Rules. In case of his temporary absence or inability to act he may designate any other officer to assume all the functions and discharge all the duties of the President. Upon his failure to do so, or if the office of President be vacant, the Chairman of the Board or any officer designated by him shall perform the functions and duties of the President. When the President returns or is again able to act, he shall resume his duties.

Section 8.7 Removals

(a) In the event of the refusal, failure, neglect or inability of the Vice Chairman of the Board to discharge his duties, or for any cause affecting the best interests of the Exchange, the sufficiency of which the Board of Directors shall be the sole judge, the Board shall have the power, by the affirmative vote of at least two-thirds of the Directors then in office exclusive of the Vice Chairman of the Board, to remove the Vice Chairman of the Board and declare such office vacant.

(b) Any officer, other than the Vice Chairman of the Board, chosen by the Board may be removed at any time by the Board, *Chairman of the Board or President* [whenever in its judgment the best interests of the Exchange would be served thereby]; provided, that the Chairman of the Board or the President may be removed only by the affirmative vote of at least two-thirds of the Directors then in office exclusive of the Chairman of the Board, who shall not vote. Any such removal shall be without prejudice to the contract rights, if any, of the person so removed.

(c) Any vacancies occurring in any office of the Exchange at any time may be filled by the Board for the unexpired term.

Section 8.8 Vice Presidents

Vice Presidents shall perform the duties prescribed by the Board, [or the] Chairman of the Board *or President.*

Section 8.9 Secretary

The Secretary shall attend all meetings of members and of the Board*; the Secretary* [and] shall keep official records of *meetings of members at which action is taken and of meetings of the Board* [proceedings thereof]; [he] *the Secretary* shall, in person or by representative, perform like services for the standing and special committees when required; [he] *the Secretary* shall give notice of meetings of members and of special meetings of the Board in accordance with the provisions of the Constitution or Rules or as required by statute; [, he] *the Secretary* shall post all notices which may be required to be posted upon the *Exchange* bulletin board; [he shall collect all monies due the Exchange for assessments, fines, dues, and otherwise, and pay the same to the Treasurer; he] *the Secretary* shall be custodian of the books, records, and corporate seal of the Exchange and attest, upon behalf of the Exchange, all contracts and other documents requiring authentication; [he] *the Secretary* shall perform such other duties as may be prescribed by the Board, [or the] Chairman of the Board or *President.*

Section 8.10 Treasurer

The Treasurer shall have general charge of the corporate funds and securities and shall keep full accounts of receipts and disbursements in permanent books belonging to the Exchange; *he shall collect all monies due the Exchange for assessments, fines, dues, and otherwise;* he shall deposit all monies and other valuable effects in the names and to the credit of the Exchange in such depositories as may be designated by the Board; he shall disburse the funds of the Exchange as may be ordered by the Board; he shall render to the Board when required by the Board an account of all his transactions as Treasurer and of the financial condition of the Exchange; he shall perform other duties as may be prescribed by the Board, [or the] Chairman of the Board *or President.*

Article IX

Indemnification

Section 9.1 Indemnification of Directors, Officers and Members of Committees

The Exchange shall, to the fullest extent permitted by the law, indemnify any person who was or is threatened to be made a party to any threatened, pending or completed action, suit or proceeding, whether civil, criminal, administrative or investigative, by reason of the fact that he is or was a Director, officer or member of a

committee of the Exchange, or is or was serving at the request of the Exchange as a director or officer of another corporation, partnership, joint venture, trust or other enterprise, against all expenses (including attorneys' fees), judgment, fines and amounts paid in settlement actually and reasonably incurred by him in connection with such action, suit or proceeding.

Section 9.2 Contract with the Exchange

The provisions of this Article IX shall be deemed to be a contract between the Exchange and each Director, officer or member of a committee of the Exchange who serves in any such capacity at any time while this Article is in effect, and any repeal or modification of any applicable law or of this Article IX shall not affect any rights or obligations then existing with respect to any state of facts then or theretofore existing or any action, suit or proceeding theretofore or thereafter brought or threatened based in whole or in part upon any such state of facts.

Section 9.3 Indemnification of Other Persons

Persons not expressly covered by the foregoing provisions of this Article IX, such as those (a) who are or were employees or agents of the Exchange, or are or were serving at the request of the Exchange as employees or agents of another corporation, partnership, joint venture, trust or other enterprise, or (b) who are or were directors, officers, employees or agents of a constituent corporation absorbed in a consolidation or merger in which the Exchange was the resulting or surviving corporation, or who are or were serving at the request of such constituent corporation as directors, officers, employees or agents of another corporation, partnership, joint venture, trust or other enterprise, may be indemnified to the extent authorized at any time or from time to time by the Board.

Section 9.4 Other Rights of Indemnification

The indemnification provided or permitted by this Article IX shall not be deemed exclusive of any other rights to which those indemnified may be entitled by law or otherwise, and shall continue as to a person who has ceased to be a Director, officer, employee or agent and shall inure to the benefit of the heirs, executors and administrators of such person.

Article X

Notices

Section 10.1 Notices

(a) Any notice required to be given by the Constitution, the Rules or otherwise shall be deemed to have been given:

(i) in person *upon delivery of the notice* [if delivered] in person to the person to whom such notice is addressed[,]*;* [and shall be deemed to have been given]

(ii) by mail *upon deposit of the notice* [to any person entitled thereto at the time it shall have been deposited] in the United States mail, enclosed in a postage prepaid envelope[,]*;* [and shall be deemed to have been given by wireless, telegraph or cable when the same shall have been delivered for prepaid transmission into the custody of a company ordinarily engaged in the transmission of such messages]

(iii) by messenger or overnight courier service upon provision of the notice to the messenger or courier service, provided that the delivery method does not require payment of the messenger or courier service fee to deliver the notice by the person to whom the notice is addressed;

(iv) by facsimile machine upon acknowledgment by the facsimile machine used to transmit the notice of the successful transmission of the notice;

(v) by electronic mail upon electronic transmission of the notice; and [shall be deemed to have been given]

(vi) by telephone when received[,].

Any such notice must be addressed to its intended recipient [such postage prepaid envelope or such wireless, telegraph or cable message being addressed to such person] at *the intended recipient's* [his] address (*including the intended recipient's business or residence address, facsimile number, electronic address, or telephone number, as applicable)* as it appears on the books and records of the Exchange, or if no address appears on such books and records, then at such address as shall be otherwise known to the Secretary, or if no such address appears on such books and records, then in care of the registered agent of the Exchange in the State of Delaware. *In the event that a notice is not provided in conformity with the provisions of this Section, the notice will be deemed to have been given to its intended recipient upon any receipt of the notice by its intended recipient.* Whenever, by any provisions of statute, the Certificate of Incorporation, the Constitution, the Rules or otherwise, any notice is required to be given any specified number of days before any meeting or event, the day on which such notice was given shall be counted but the day of such meeting or other event shall not be counted in determining whether or not notice has been given in proper time in a particular case.

(b) The Exchange may provide to all members and associated persons by electronic mail only those notices provided in the Exchange Bulletin and Regulatory Bulletin and any other types of notices designated by the Board of Directors. If requested in a form and manner prescribed by the Exchange, the Exchange may permit members and associated persons to request that such notices be given by other means.

Section 10.2 Waiver of Notice

Whenever notice is required to be given under the provisions of any statute, the Certificate of Incorporation, the Constitution, the Rules or otherwise, a written waiver thereof, signed by the person entitled to notice, or his proxy in the case of a member, whether before or after the time stated therein shall be deemed equivalent to notice. Except as may be otherwise specifically provided by statute, any waiver by mail, *messenger, overnight courier, facsimile machine, or electronic mail* [telegraph, cable or wireless], bearing the name of the person entitled to notice shall be deemed a written waiver duly signed. Attendance of a person at a meeting, including attendance by proxy in the case of a member, shall constitute a waiver of notice of such meeting except when the person attends a meeting for the express purpose of objecting, at the beginning of the meeting, to the transaction of any business the meeting is not lawfully called or convened. Except as required by statute, the Certificate of Incorporation, the Constitution or the Rules, neither the business to be transacted at, nor the purpose of, any regular or special meeting of the members, Directors or any committee need be specified in any written waiver of notice.

Article XI

General Provisions

Section 11.1 Fiscal Year

The fiscal year of the Exchange shall be as determined from time to time by the Board.

Section 41.2 Checks, Drafts and Other Instruments

All checks, drafts or other orders for the payment of money, notes or other evidences of indebtedness issued in the name of the Exchange shall be signed by such officer or officers, or by such agent

or agents of the Exchange and in such manner as the Board may from time to time determine.

[Section 11.3 Departments

The Chairman of the Board, with the approval of the Board, is authorized to establish and maintain such departments as may be deemed necessary from time to time, and the Board shall make all needful regulations applicable thereto.]

[Section 11.4 Officers and Employees Restricted

(a) Every salaried officer or employee of the Exchange, except the Vice Chairman of the Board, and every salaried officer or employee of any corporation in which the Exchange owns the majority of the stock, shall report promptly to the Exchange every purchase or sale for his or her own account or the account of others of any security which is the underlying security of any option contract admitted to dealings on the Exchange.

(b) With the exception of the Vice Chairman of the Board, no salaried officer or employee of the Exchange or salaried officer or employee of any corporation in which the Exchange owns the majority of the corporate stock may purchase or sell for his or her own account or for the account of others any option contract which entitles the purchaser to purchase or sell any security described in paragraph (a) of this Section.

(c) Paragraphs (a) and (b) above of this Section shall not be construed to preclude any salaried officer or employee of the Exchange or of any corporation in which the Exchange owns a majority of the stock from performing his duties and responsibilities as assigned to him by such organization.]

Article XII

Amendments

Section 12.1 Constitution

The Constitution may be amended at any regular or special meeting of members by the affirmative vote of a majority of *voting* [the] members present in person or represented by proxy at the meeting.

Section 12.2 Rules

The Rules may be amended by the affirmative vote of a majority of the Directors present at a meeting at which such amendment is proposed, provided, however, that promptly upon the adoption of an amendment to the Rules, notice thereof shall be sent to each member, and within 15 days after such notice has been given, 150 or more voting members may request in writing that a special meeting of members be held to vote upon whether the amendment to the Rules shall be approved. The notice of the meeting shall state that the approval of such a proposed amendment will be considered.

Section 12.3 Effectiveness of Amendments

Subject to applicable federal or state regulatory requirements, amendments to the Constitution shall be effective upon their adoption by the members, and amendments to the Rules shall be effective at the expiration of the 15-day notice period, or, if a special meeting of members has been requested to vote upon the amendment or if the amendment otherwise requires membership approval, at the time the amendment is approved by the requisite vote of the members; provided, however, that, except in the case of a Rule that expressly requires amendments to be approved by the membership or by a class of members, the Board may declare an amendment to the Rules effective immediately upon its adoption by the Board whenever the Board determines that, under the circumstances, such accelerated effectiveness is appropriate. Any amendment to the Rules which is declared effective by the Board upon its adoption nevertheless remains subject to being voted upon at a special meeting of members in accordance with Section 12.2, and any such amendment which is so voted upon but not approved shall be rescinded and shall cease to be effective from and after the time of its failure to be approved by the members. The rights and obligations of persons who rely in good faith on an amendment to the Rules declared immediately effective by the Board shall not be affected in the event such amendment is subsequently disapproved by the members.

* * * * *

Rules

Chapter II—Organization and Administration

Committees of the Exchange

RULE 2.1 (a) Establishment of Committees. In addition to committees specifically provided for in the Constitution, there shall be the following committees: Appeals, Arbitration, Business Conduct, appropriate Floor Procedure Committees, Floor Officials, appropriate Market Performance Committees, Membership, Product Development and such other committees as may be established in accordance with the Constitution. Except as may be otherwise provided in the Constitution or the Rules, the Vice Chairman of the Board, with the approval of the Board, shall appoint the chairmen and members of such committees to serve for terms expiring at the *first* regular meeting of the Board *of Directors* [following the next succeeding Annual Election Meeting or] *of the next calendar year and until their* successors are appointed *or their earlier death, resignation or removal.* Consideration shall be given to continuity and to having, where appropriate, a cross section of the membership represented on each committee. Except as may be otherwise provided in the Constitution or the Rules, the Vice Chairman of the Board may, at any time, with or without cause, remove any member of such committees. Any vacancy occurring in one of these committees shall be filled by the Vice Chairman of the Board for the remainder of the term. Notwithstanding the foregoing, the Chairman of the Board, with the approval of the Board, shall appoint Directors to serve on the Audit and Compensation Committees, whose members shall not be subject to removal except by the Board. Whenever the Vice Chairman of the Board is, or has reason to believe he may become, a party to any proceeding of an Exchange committee, he shall not exercise his power to appoint or remove members of that committee, and the Chairman of the Board shall have such power.

(b) Committee Procedures. Except as otherwise provided in the Constitution, the Rules or a resolution of the Board, each committee shall determine the time and manner of conducting its meetings, and the vote of a majority of the members of a committee *voting* [present] at a meeting at which a quorum is present shall be the act of the committee. Committees may act informally by written consent of all of the members of the committee.

(c)–(d) No Changes.

* * * * *

Chapter VIII—Market Makers, Trading Crowds and Modified Trading Systems

MTS Committee

RULE 8.82. (a) The MTS Committee shall consist of the Vice-Chairman of the Exchange, the Chairman of the Market Performance Committee, and nine *persons* [members] elected by the membership of the Exchange.

(b) The nine elected MTS Committee members shall include: *three* [four] members whose primary business is as a Market-Maker;[,] *three* [two] members

whose primary business is as a Market-Maker or as a DPM Designee;[,] *and three* [one] members whose primary business is as a Floor Broker*, at least two of whom represent public customer orders in the course of their activities as a Floor Broker*[and who is not associated with a member organization that conducts a public customer business, and two persons associated with member organizations that conduct a public customer business. No more than two of the nine elected MTS Committee members may be associated with a DPM]. *One of the nine elected positions on the MTS Committee may instead be filled by a person (i) who directly or indirectly owns and controls a membership with respect to which the person acts as a lessor, (ii) whose primary business is not as a Market-Maker, DPM Designee, or Floor Broker, and (iii) whose primary residence is located within 80 miles of the Exchange's trading floor. No elected member of the MTS Committee may be affiliated (as defined under Rule 1.1(j)) with any other elected member of the MTS Committee.* The nine elected MTS Committee members shall have three-year terms, three of which shall expire each year.

(c) The election procedures for the nine elected MTS Committee members shall be the same as the election procedures for elected Directors that are set forth in Article IV and Article V of the Exchange Constitution. Accordingly, the following shall occur as part of these procedures: [During October of each year, the] *The* Nominating Committee shall select nominees to fill expiring terms and vacancies on the MTS Committee. Nominations may also be made by petition, signed by not less than 100 voting members and filed with the Secretary of the Exchange no later than 5:00 p.m. (Chicago time) on the Monday preceding the 1st Friday in November, or the first business day thereafter in the event that Monday occurs on a holiday. The election to fill the expiring terms and vacancies on the MTS Committee shall be held as part of the annual election. *The term of office of each MTS Committee member elected at an annual election meeting shall commence at the time of the first regular Board of Directors meeting of the calendar year following that annual election meeting and shall continue until the first regular Board meeting of the third succeeding calendar year. Elected MTS Committee members shall hold office for the terms for which they are elected and until their successors are duly elected and qualified or until their earlier death, resignation, or removal.*

(d) Candidates for election to the MTS Committee, whether nominated by the Nominating Committee or by petition, shall be eligible for election in any of the categories for which they qualify both at the time of their nomination and at the time of their election. The sole judge of whether a candidate satisfies the applicable qualifications for election to the MTS Committee in a designated category shall be the Nominating Committee in the case of candidates nominated by the Nominating Committee, and shall be the Executive Committee in the case of candidates nominated by petition, and the decision of the respective committee shall be final. In the event a person's status changes following election to the MTS Committee, the sole judge of whether the person continues to satisfy the applicable qualifications for service on the MTS Committee shall be the Board of Directors.

(e) In the event of the refusal, failure, neglect, or inability of any MTS Committee member to discharge that person's duties, or for any cause affecting the best interests of the Exchange, the sufficiency of which the Board of Directors shall be the sole judge, the Board shall have the power, by the affirmative vote of at least two-thirds of the Directors then in office, to remove that MTS Committee member from the Committee.

(f) Any vacancy occurring among the members of the MTS Committee may be filled by a qualified person appointed by the Vice Chairman of the Board with the approval of the Board of Directors. The term of any MTS Committee member so chosen shall be from the date of appointment until the first regular Board meeting of the calendar year following the next annual election meeting and until the person's successor is duly elected and qualified, or until the person's earlier death, resignation, or removal. The remaining portion of the unexpired term of an MTS Committee member, if any, shall be served by a person elected at the next annual election meeting.

* * * * *

Chapter IX—Doing Business With the Public

* * * * *

Transactions of Certain Customers

RULE 9.17. No member organization shall execute any transaction in securities or carry a position in any security in which (a) an officer or employee of the Exchange, [or any other national securities exchange which is a participant of the Clearing Corporation,] or an officer or employee of a corporation in which the Exchange [or such other exchange] owns the majority of the capital stock is directly or indirectly interested, without the prior written consent of the Exchange, or (b) a partner, officer, director, principal shareholder or employee of another member organization is directly or indirectly interested, without the consent of such other member organization. Where the required consent has been granted, duplicate reports of the transaction and position shall be promptly sent to the Exchange or member organization, as the case may be.

* * * * *

[1] Prior to the 2002 annual election meeting, the three classes of Directors elected by the membership are composed as follows: Class I: one floor director, one at-large director, one lessor director, two off-floor directors, and two public directors; Class II: one floor director, one at-large director, two off-floor directors, and three public directors.

* * * * *

II. Self-Regulatory Organization's Statement of the Purpose of, and Statutory Basis for, the Proposed Rule Change

In its filing with the Commission, CBOE included statements concerning the purpose of, and basis for, the proposed rule change and discussed any comments it received on the proposed rule change. The text of these statements may be examined at the places specified in Item IV below. CBOE has prepared summaries, set forth in Sections A, B, and C below, of the most significant aspects of such statements.

A. Self-Regulatory Organization's Statement of the Purpose of, and Statutory Basis for, the Proposed Rule Change

1. Purpose

CBOE states that the purpose of the proposed rule change is to make certain revisions to provisions of the Exchange's Constitution and rules pertaining to the governance of the Exchange. These proposed changes are intended to further enhance the fair and efficient governance of the Exchange and modernize various provisions of the Exchange's governance structure.

With respect to Constitution provisions relating to the Board of Directors and the Vice Chairman of the Board, the proposed rule change amends Constitution Sections 6.1(b), 6.4, and 8.1 to specify that Directors and the Vice Chairman take office on January 1st. Currently, the Constitution

provides that the term of office of Directors starts at the first regular meeting of the Board held after January 1 following the annual election, and continues until their successors are duly elected and qualified, whereas the term of office of the Vice Chairman starts on the 3rd Friday in December of each year, assuming the incoming candidate is qualified on that date, and continues until his successor is duly chosen and qualified.

The proposed rule change also amends Constitution Section 6.3(b) to provide the later of 45 days or until the next regular Board meeting for a Director who fails to maintain qualifications for a designated category to requalify. During any period in which a Director fails to maintain qualifications for a designated category, the Director shall be deemed not to hold office and the seat formerly held by the Director shall be deemed vacant for all purposes.

With respect to Constitution provisions relating to the Exchange's Nominating Committee, the proposed rule change amends Section 4.1(b) to exempt members of the Nominating Committee who have not served a full 3-year term from the Constitutional provision that provides that ''Elected members of the Nominating Committee shall be ineligible for reelection for a period of three years after their terms expire.'' This amendment will allow a member of the Nominating Committee who was elected to a short term as a result of a vacancy to stand for reelection.

The proposed rule change also amends Constitution Section 4.3 to delete the requirement that the Nominating Committee must hold three meetings in October, and also to require that the Nominating Committee announce its slate of candidates not later than October 10th or the first business day thereafter if the 10th is not a business day.

The proposed rule change also adopts new Constitution Section 4.8 to require that members of the Nominating Committee shall meet the eligibility criteria for the category to which they were elected (floor, firm, lessor or public member) continuously and not only during the time periods in which the Nominating Committee is in session. New Section 4.8 also specifies that the sole judge of whether a Nominating Committee member satisfies the qualification criteria for the category to which the committee member was elected is the Board of Directors. In addition, this new Section also provides that a member of the Nominating Committee who fails to maintain the applicable qualifications has 45 days from the date the Board determines the member is not qualified to requalify.

The proposed rule change also adopts new Constitution Section 4.9 which specifies that the Board may remove Nominating Committee members in the event of the refusal, failure, neglect, or inability of any Nominating Committee member to discharge that person's duties, or for any cause affecting the best interests of the Exchange. This proposed new Section 4.9 is consistent with Constitution Section 6.3(c), which allows the Board to remove a Director for cause.

With respect to the election and voting procedures for membership votes, the proposed rule change adopts new Constitution Section 3.8 to authorize the Board to set a ''record date'' to determine those members who are entitled to receive notice and to vote in any Exchange election/vote. The record date would be the day preceding the date on which notice of the vote is given, if an alternate record date is not fixed by the Board. An individual or organization must be an effective, voting member on the record date to cast a ballot in an election or membership vote.

The proposed rule change also amends Constitution Section 5.2 to provide that the Exchange may allow voting members to electronically submit ballots and proxies. This amendment would also provide the flexibility to allow for a confidential electronic or on-line voting process in the future, if the Board determines to do so.

With respect to the communication methods by which the Exchange may provide notice to members, the proposed rule change amends Constitution Section 10.1 to allow the Exchange to give notice to members and associated persons by messenger, courier service, facsimile or electronic mail (''e-mail''), as well as in-person or by mail or telephone as is currently provided in Section 10.1. The proposed rule change deletes wireless, telegraph, and cable as available communication methods. In addition, the Board proposes to amend Constitution Section 10.2 to allow for waiver of notice by the same means as notice may be given. Amending these sections will modernize and make more flexible the Constitutional requirements with respect to notice and waiver of notice.[3]

The proposed rule change also adopts new Constitution Section 10.1(b) which limits the types of notices that may be given via email to only those notices provided in the Exchange Bulletin and Regulatory Bulletin and any other types of notices designated by the Board. Constitution Section 10.1(b) specifically provides that the Exchange may provide the *Exchange Bulletin* and the *Regulatory Bulletin* (including the notices contained therein) by email. This section also allows the Exchange to permit members and associated persons to request delivery of the *Bulletins* (or such other notices as the Board may designate) by other means, in a form and manner prescribed by the Exchange.

The proposed rule change also deletes Constitution Section 11.4, which prohibits officers and employees of the Exchange (except the Vice Chairman of the Board) from trading any option listed on CBOE. Section 11.4 also requires officers and employees to report to the Exchange every purchase or sale of any security underlying an option listed on CBOE. The above trading restriction and reporting requirement are also set forth in the Exchange's Employee Conflict of Interest Policy. Upon the deletion of Section 11.4, the Exchange proposes to liberalize the securities transaction policies to allow employees (with certain restrictions applicable to Regulatory Services Division employees) to trade CBOE listed products and to require employees to report transactions in CBOE listed products to the Exchange. The securities transaction policy would be included solely in the Exchange Employee Handbook, rather than the Exchange's Constitution.[4]

In connection with the foregoing change, the Exchange also proposes to amend Exchange Rule 9.17 to delete the requirement that a member organization must obtain authorization from the CBOE before executing securities transactions for officers or employees of any national securities exchange that is a participant of the Clearing Corporation. The rule will continue to require member organizations to obtain such authorization from the CBOE before executing securities transactions for CBOE officers and employees.

[3] Currently, the Constitution does not allow the Exchange to provide notice via e-mail or facsimile, unless a member submits a waiver of notice. For example, the Constitution and Rules, in certain specific instances, require the Exchange to provide notice to members. To satisfy these requirements, the Exchange gives notice to members via the *Exchange Bulletin* and the *Regulatory Bulletin*, which are mailed to all effective members unless a member submits a written consent to provision of the *Bulletins* by e-mail.

[4] A copy of CBOE's securities transaction policies, as proposed to be amended in connection with the deletion of Constitution Section 11.4, was provided to the Commission for its information but is not a rule change and thus was not included as part of this rule filing.

With respect to CBOE rules relating to the MTS Committee, the proposed rule change proposes to amend Rule 8.82 to provide that the nine elected MTS Committee members will include: Three persons whose primary business is as a Market-Maker, three persons whose primary business is as a Market-Maker or as a DPM Designee, and three persons whose primary business is as a Floor Broker, at least two of whom represent public customer business in the course of their activities as a Floor Broker. The Vice Chairman of the Exchange and the Chairman of the Market Performance Committee will continue to serve on the MTS Committee.[5] The amendment to Rule 8.82 also provides that one of the nine elected positions on the MTS Committee may be filled by a lessor whose primary business is not as a Market-Maker, DPM Designee, or Floor Broker, and whose primary residence is located within 80 miles of the Exchange's trading floor. This distance is equivalent to the distance requirement for certain off-floor Directors under Constitution Section 6.1. Because the MTS Committee meets frequently, it is important that its members reside locally to be available for regular and impromptu meetings.

Further, the proposed amendments to Rule 8.82 provide that: (i) No elected member of the MTS Committee may be affiliated with (as defined under CBOE Rule 1.1(j)) any other elected member of the MTS Committee; (ii) the term of office of elected MTS Committee members will commence at the time of the first regular Board meeting of the calendar year; (iii) the Board of Directors is the sole judge of whether or not an MTS Committee member no longer qualifies to serve on the Committee; (iv) the Board may remove MTS Committee members for cause; and (v) the Vice Chairman, with the approval of the Board, may fill vacancies on the MTS Committee until the first regular Board meeting of the calendar year following the next annual election.

The proposed rule change also amends CBOE Rule 2.1 to provide that the term of office for committee members who are appointed pursuant to that rule will continue until the first regular Board meeting of the next calendar year and until their successors are appointed or until death, resignation or removal. The proposed rule change also amends Rule 2.1 to provide that a majority of the committee members voting, as opposed to present, at a meeting shall be the act of the committee.

Finally, the proposed rule change proposes to make several changes to the Exchange's Constitution and rules that are housekeeping in nature and designed to modernize and clarify the Exchange's Constitution and rules, and update the Constitution and rules to reflect current rules and practice. Specifically, the proposed rule change:

- Amends Constitution Sections 1.1(c) and 2.3 to include the concept of leased memberships, as well as owned memberships, in the definition of member organizations and the requirement that member organizations designate an individual nominee to be consistent with the Constitution's provisions and Exchange rules.
- Amends Constitution Sections 2.1(a) and 12.1 to add ''voting'' to the term ''members'' to clarify who may vote at a membership meeting.
- Amends Constitution Section 3.1 to specify that membership meetings will take place on the 4th floor of the Exchange (as opposed to on the trading floor), unless otherwise determined by the Secretary, to conform to current practice.
- Amends Constitution Section 3.2 to provide that the annual election meeting will be held on the 1st business day preceding the 3rd Friday in November (rather than on the 3rd Friday).
- Amends Constitution Sections 3.2 and 3.3 to specify that the Secretary, rather than the Board, will determine the time of the annual election and annual report meetings, because the Board does not generally become involved in this level of detail with respect to membership meetings.
- Amends Constitution Section 3.3 to clarify that the purpose of the annual report meeting is to present the Exchange's annual report.
- Amends Constitution Section 3.5 to specify that written notice of each membership meeting at which a vote will be taken shall be ''given'' (rather than ''delivered'') to each member entitled to vote not more than 60 days and at least 10 days before the date of the meeting to be consistent with Delaware law.
- Amends Constitution Sections 4.1 and 6.1 and Rule 8.82 to make it clear whether the term ''member'' in the eligibility criteria for the Board of Directors, the Nominating Committee, and the MTS Committee is referring to a ''member of the Exchange'' or a ''member of the Board or Committee,'' as applicable.
- Amends Constitution Sections 4.1 and 4.2 to clarify that a Nominating Committee member's term ends upon the expiration of his/her term or upon the Nominating Committee member's death, resignation or removal.
- Amends Constitution Sections 4.3, 4.6, 5.3 and 8.9 to clarify and make consistent references requiring the posting of information on the Exchange bulletin board.
- Amends Constitution Sections 5.2 and 5.3 to be consistent with the current procedures for the receipt, verification and counting of ballots.
- Amends Constitution Section 6.7 to allow the Exchange to provide notice of a special Board meeting to each Director either in person, by mail, messenger, overnight courier, facsimile machine, e-mail, telephone, or announcement on the Exchange trading floor. The amendment proposes to delete telegram and cablegram as methods of notice to directors for special Board meetings.
- Amends Constitution Section 8.1 to provide that the vote to elect a Vice Chairman of the Board (if any) will be held on the 1st business day preceding the 3rd Friday in December (rather than the 3rd Friday) and to clarify that the Board does not have to reappoint all officers at the beginning of each year.
- Amends Constitution Section 8.4 to clarify, consistent with Constitution Section 8.1(a), that if a vacancy occurs in the office of Chairman, the Board shall appoint a new Chairman by the affirmative vote of at least two-thirds of the Directors then in office.
- Amends Constitution Section 8.6 to specifically allow the Board to grant an exemption to the prohibition against the President engaging in any other business in the same manner that the Board may grant such an exemption to the Chairman of the Board pursuant to Constitution Section 8.2.
- Amends Constitution Sections 8.6, 8.7(b), 8.8, 8.9 and 8.10 to update the Constitution with respect to officer duties and responsibilities (*i.e.*, clarify that the President shall be required to approve all contracts on behalf of the Exchange but may delegate responsibility for executing contracts, specify when the Secretary must maintain records of meetings, specify that the Chairman of the Board and the President, as well as the Board, may remove any officer, clarify that the President may assign duties to officers, and move the duty to collect all monies due the Exchange from the Secretary to the Treasurer).

[5] Currently, Rule 8.82 provides that the MTS Committee is comprised of the Vice Chairman, the Chairman of the Market Performance Committee, and nine elected members as follows: Four members whose primary business is as a Market-Maker, two members whose primary business is as a Market-Maker or as a DPM Designee, one member whose primary business is as a Floor Broker and who is not associated with a member organization that conducts a public customer business, and two persons associated with member organizations that conduct a public customer business.

• Deletes Constitution Section 11.3, which authorizes the Chairman of the Board to establish Exchange departments. The section is unnecessary because the authority is encompassed within the Chairman's responsibility as Chief Executive Officer and inconsistent with the Exchange's current organizational structure, which consists of divisions made up of departments.

2. Statutory Basis

CBOE believes that the proposed rule change further enhances the fair and efficient governance of the Exchange and modernizes various provisions of the Exchange's governance structure. Therefore CBOE believes the proposed rule change furthers the objectives of section 6(b)(3) of the Act [6] to assure fair representation of the members of the Exchange in the selection of its directors and in the administration of its affairs. CBOE also believes that the proposed rule change furthers the objectives of section 6(b)(5) of the Act [7] to protect investors and the public interest.

B. Self-Regulatory Organization's Statement on Burden on Competition

CBOE does not believe that the proposed rule change will impose any burden on competition not necessary or appropriate in furtherance of purposes of the Act.

C. Self-Regulatory Organization's Statement on Comments on the Proposed Rule Change Received from Members, Participants or Others

No written comments were solicited or received with respect to the proposed rule change.

III. Date of Effectiveness of the Proposed Rule Change and Timing for Commission Action

Within 35 days of the date of publication of this notice in the **Federal Register** or within such longer period (i) as the Commission may designate up to 90 days of such date if it finds such longer period to be appropriate and publishes its reasons for so finding or (ii) as to which the self-regulatory organization consents, the Commission will:

(A) By order approve such proposed rule change, or

(B) Institute proceedings to determine whether the proposed rule change should be disapproved.

IV. Solicitation of Comments

Interested persons are invited to submit written data, views and arguments concerning the foregoing, including whether the proposal, as amended, is consistent with the Act. Persons making written submissions should file six copies thereof with the Secretary, Securities and Exchange Commission, 450 Fifth Street, NW, Washington, DC 20549–0609. Comments should be submitted electronically at the following e-mail address: *rule-comments@sec.gov.* All comment letters should refer to File No. SR–CBOE–2003–55. This file number should be included on the subject line if e-mail is used. To help the Commission process and review your comments more efficiently, comments should be sent in hard copy or by e-mail but not by both methods. Copies of the submission, all subsequent amendments, all written statements with respect to the proposed rule change that are filed with the Commission, and all written communications relating to the proposed rule change between the Commission and any person, other than those that may be withheld from the public in accordance with the provisions of 5 U.S.C. 552, will be available for inspection and copying in the Commission's Public Reference Room. Copies of such filing will also be available for inspection and copying at the principal office of CBOE. All submissions should refer to File No. SR–CBOE–2003–55 and should be submitted by January 20, 2004.

For the Commission, by the Division of Market Regulation, pursuant to delegated authority.[8]

Margaret H. McFarland,

Deputy Secretary.

[FR Doc. 03–31804 Filed 12–24–03; 8:45 am]

BILLING CODE 8010–01–P

[6] 15 U.S.C. 78f(b)(3).

[7] 15 U.S.C. 78f(b)(5).

[8] 17 CFR 200.30–3(a)(12).

SECURITIES AND EXCHANGE COMMISSION

[Release No. 34–48953; File No. SR–CBOE–2003–57]

Self-Regulatory Organizations; Notice of Filing and Immediate Effectiveness of a Proposed Rule Change by the Chicago Board Options Exchange, Inc. Relating to the Trading of Index Options and Options on ETFs on the CBOE Hybrid System

December 18, 2003.

Pursuant to section 19(b)(1) of the Securities Exchange Act of 1934 (''Act''),[1] and Rule 19b–4 thereunder,[2] notice is hereby given that on December 8, 2003, the Chicago Board Options Exchange, Inc. (''Exchange'' or ''CBOE'') filed with the Securities and Exchange Commission (''SEC'' or ''Commission'') the proposed rule change as described in Items I, II, and III below, which Items have been prepared by the CBOE. The Exchange has filed the proposal as a ''non-controversial'' rule change pursuant to section 19(b)(3)(A)(iii) of the Act,[3] and Rule 19b–4(f)(6) thereunder,[4] which renders the proposal effective upon filing with the Commission.[5] The Commission is publishing this notice to solicit comments on the proposed rule change from interested persons.

1. Self-Regulatory Organization's Statement of the Terms of Substance of the Proposed Rule Change

The CBOE proposes to provide for the trading of index options and options on exchange traded funds (''ETFs'') on the CBOE Hybrid System (''Hybrid System''). The text of the proposed rule change appears below. Proposed new language is in *italics*; proposed deletions are in [brackets].

Rule 6.45A Priority and Allocation of Trades for CBOE Hybrid System

(a)–(d) No change.

(e) [Effective Date of Rule] *Classes Trading on Hybrid.*

[The Exchange will commence rollout of the Hybrid System by May 30, 2003.] By December 31, 2003, Hybrid will be operational in CBOE's 200 most active equity option classes and, by December 31, 2004, Hybrid will be operational in CBOE's 500 most active equity option classes. The Exchange intends to implement Hybrid floorwide in all other equity classes by the fourth quarter of 2006. *Index option classes and options on ETFs specifically designated by the appropriate Floor Procedure Committee may trade on the Hybrid System. In order to be eligible for trading on Hybrid, index option classes and options on ETFs must utilize an in-crowd Designated Primary Market Maker.*

* * * * *

Rule 24.13 Trading Rotations

The opening rotation for index options shall be held at or as soon as practicable after 8:30 a.m. Chicago time. Except as the appropriate Floor Procedures Committee may direct, opening rotations shall be conducted in the order and manner the Order Book

[1] 15 U.S.C. 78s(b)(1).

[2] 17 CFR 240.19b–4.

[3] 15 U.S.C. 78s(b)(3)(A)(iii).

[4] 17 CFR 240.19b–4(f)(6).

[5] The Exchange asked the Commission to waive the 30-day operative delay. *See* Rule 19b–4(f)(6)(iii). 17 CFR 240.19b–4(f)(6)(iii).

Official determines to be appropriate under the circumstances. The appropriate Floor Procedure Committee may provide for the opening rotation to be conducted by use of the Exchange's Rapid Opening System as set forth in Rule 6.2A *or the Exchange's Hybrid Opening System as set forth in Rule 6.2B.* The Order Book Official, with the approval of two Floor Officials, may deviate from any rotation policy or procedure issued by the appropriate Floor Procedures Committee when they conclude in their judgment that such action is appropriate in the interests of a fair and orderly market.

Interpretations and Policies

.01 No Change.

.02 Modified Opening Rotation—In conducting the opening rotation in S&P 100 options, certain option series having the nearest expiration may be opened as described in Interpretation .01 to Rule 6.2 (''main rotation''). The remaining series having the nearest expiration and other series having more distant expirations may be divided into one or more zones and be opened simultaneously with the main rotation by an Order Book Official in the following manner. One or more Lead Market Makers (LMM) in each zone shall be responsible for quoting a two-sided market in each of the series assigned to the zone. The markets will generally be set without prior indication of the imbalances to be facilitated. Only in the case of extreme market conditions or an extremely large imbalance of opening orders may the Order Book Official indicate the direction or size of the order imbalance. Upon receiving the LMM market, the Order Book Official will state the net imbalance in each series to the LMM who shall buy or sell it.

Instead of the procedure described in the paragraph above, the opening rotation in S&P 100 options may be conducted using the Exchange's Rapid Opening System. *Index options that trade on the Hybrid System must utilize the Hybrid Opening System, as described in CBOE Rule 6.2B.*

Upon conclusion of the main rotation, the Order Book Official conducting the main rotation will declare open trading in all series. Such declaration shall apply to the main rotation and to all zones which have completed opening rotation. Open trading in the series assigned to the zones shall not commence before the Order Book Official conducting the main rotation has made such declaration.

Market-Makers who wish to participate in the opening of series in which they do not hold LMM or SMM appointments may transmit written non-cancelable proprietary and Market-Maker orders to the LMM in that zone ten minutes prior to the opening of trading. The participation on the opening imbalance will not exceed the participation of a Supplemental Market-Maker (''SMM'') in that zone.

.03 No Change.

* * * * *

Rule 24.15 [RAES Operations in] *Automatic Execution* **of Index Options**

The operations of the Retail Automated Execution System (RAES) for index options *not trading on the Hybrid System* are subject to Rule 6.8. *Rule 6.13 governs the automatic execution of index options trading on the Hybrid System.*

* * * * *

Rule 24.19 Multi-Class Broad-Based Index Spread Orders

(a) No change.

(b)(i)–(iii) No change.

(iv) The priority of bids or offers received from the primary trading station will be determined, with respect to each other, by the terms of paragraphs (a) and (b) of Rule 6.45 *for non-Hybrid classes or by paragraphs (a)–(d) of Rule 6.45A for Hybrid classes.* Bids or offers received promptly from the other trading crowd may participate equally with equal bids or offers from the primary trading station that were received prior to the bids or offers from the other trading station. The meaning of promptly will be determined according to the size of the order and other relevant circumstances.

* * * * *

II. Self-Regulatory Organization's Statement of the Purpose of, and Statutory Basis for, the Proposed Rule Change

In its filing with the Commission, the Exchange included statements concerning the purpose of, and basis for, the proposed rule change and discussed any comments it received on the proposed rule change. The text of these statements may be examined at the places specified in Item IV below. The Exchange has prepared summaries, set forth in sections A, B, and C below, of the mose significant parts of such statements.

A. Self-Regulatory Organization's Statement of the Purpose of, and Statutory Basis for, the Proposed Rule Change

In May of 2003, the Commission approved the Hybrid System.[6] The Hybrid System merges the electronic and open outcry trading models, offering market participants the ability to stream electronically their own firm disseminated market quotes representing their trading interest. Currently, the Exchange trades only equity options on the Hybrid System. The purpose of this rule filing is to provide for the trading of index options and options on exchange traded funds (''ETFs'') on the Hybrid System.

Uniformity of Operation Between Equity and Index Options and Options on ETFs

The Exchange proposes that the Hybrid System will function in the exact same manner in index classes and options on ETFs as it does in equity option classes, the operation of which was described in detail in the Hybrid Release. All of the Hybrid rules, including CBOE Rules 6.13 and 6.45A, would apply to the indexes and options on ETFs in the exact same manner they apply to options on equities. As such, incoming electronic orders in index/ETF options would be eligible for automatic execution pursuant to CBOE Rule 6.13 and would be allocated via the Ultimate Matching Algorithm (''UMA''). Open outcry trades would be allocated pursuant to CBOE Rule 6.45(b) and the Quote Trigger and Quote Lock features of CBOE Rules 6.45A(c) and (d) would apply to index/ETF option trading. Index and ETF option market makers would be subject to the same market maker obligations as their equity brethren. The only rule changes necessary to accommodate Hybrid trading in index options are minor and non-substantive in nature, as described below.[7]

Changes to Index CBOE Rules 24.13, 24.15, and 24.19

CBOE proposes to amend CBOE Rule 24.13.02 clarifying that the Hybrid Opening System (''HOSS'') will be utilized for all index classes trading on the Hybrid System.[8] The proposed rule

[6] *See* Securities Exchange Act Release No. 47959 (May 30, 2003), 68 FR 34441 (June 9, 2003) (''Hybrid Release'').

[7] Equity option trading rules govern ETF trading.

[8] Currently, options on indexes and ETFs generally open in accordance with the opening procedures described in CBOE Rule 6.2A, Rapid Opening System. The HOSS rules were approved in the Hybrid Release.

change to CBOE Rule 24.15 would provide that retail automated execution systems (''RAES'') will continue to be operational for non-Hybrid classes while CBOE Rule 6.13 will govern automatic executions in Hybrid classes.[9] Finally, the Exchange proposes to amend paragraph (b)(iv) of CBOE Rule 24.19 to delineate priority principles applicable to multi-class index option spreads in non-Hybrid versus Hybrid classes.

Designation of Indexes Trading on Hybrid

CBOE also proposes to amend CBOE Rule 6.45A(e), which governs the rollout schedule for equity option classes, to give the appropriate Floor Procedure Committee (''FPC'') the discretion to determine which index option classes and options on ETFs will trade on the Hybrid Sytem. The exchange represents that this is identical to the equity option rule, where the appropriate committee determines the rollout schedule for equity option classes.

The current Hybrid rules only allow the trading of products in which there is a Designated Primary Market Maker (''DPM''). The Exchange does not propose any changes to these rules. As such, only those index or ETF option classes that have DPMs would be eligible to trade on the Hybrid System. An Index or ETF option class that does not have a DPM may not trade on the Hybrid System until such time that the DPM system is in place in that index or ETF option class or until the Exchange adopts additional rules allowing the introduction of Hybrid trading with other than a DPM (*e.g.,* a Lead Market Maker or other type of trading structure.[10] The Exchange proposes amending language to Exchange CBOE Rule 6.45A(e) to incorporate the above restriction.

In determining which index or ETF option classes to trade on the Hybrid System, the appropriate committee would consider several factors. First, it would look to the level of trading volume in a particular index/ETF option class. Generally, active index/ETF option classes (of those with DPMs) would be introduced to Hybrid trading sooner than will those index/ETF option classes with low trading volume. Second, the FPC would consider the readiness of the trading crowd. Before the Exchange lists a product on the Hybrid System, it would provide education to the affected market participants in several different areas, such as: how Hybrid operates, how market participants connect to the Hybrid System, *etc.* Trading crowds exhibiting more readiness to trade likely would begin trading on the Hybrid System more quickly than will crowds not demonstrating the same level of readiness. Third, the FPC would consider market share in a particular index/ETF option class. An index or ETF option class in which the FPC believes the Exchange can obtain or maintain a high market share would be a prime candidate for Hybrid trading.

2. Statutory Basis

The Exchange believes that the proposal is consistent with the requirement under section 6(b)(5) of the Act[11] in that it is designed to promote just and equitable principles of trade, to remove impediments to and perfect the mechanism of, a free and open market and a national market system and, in general, to protect investors and the public interest by providing automatic executions for eligible electronic orders; by providing an open outcry trading environment for trades to occur on the floor; and offer market participants the ability to electronically disseminate their own firm market quotes, which should result in a greater number of automatic executions for orders on the Exchange.

The Exchange also believes that extending Hybrid to selected index and ETF options, thereby adding market makers to the quoting equation, may have the effect of narrowing spreads and increasing depth.

B. Self-Regulatory Organization's Statement on Burden on Competition

The Exchange does not believe that the proposed rule change will impose any burden on competition that is not necessary or appropriate in furtherance of the purposes of the Act.

C. Self-Regulatory Organization's Statement on Comments on the Proposed Rule Change Received From Members, Participants or Others

The Exchange has neither solicited nor received written comments on the proposed rule change.

III. Date of Effectiveness of the Proposed Rule Change and Timing for Commission Action

Because the proposed rule change: (i) Does not significantly affect the protection of investors or the public interest; (ii) does not impose any significant burden on competition; and (iii) does not become operative for 30 days (or such shorter time as the Commission may designate if consistent with the protection of investors and the public interest) after the date of the filing, the proposed rule change has become effective pursuant to section 19(b)(3)(A) of the Act[12] and Rule 19b–4(f)(6) thereunder.[13]

A proposed rule change filed under Rule 19b–4(f)(6) normally does not become operative prior to 30 days after the date of filing. However, Rule 19b–4(f)(6)(iii) permits the Commission to designate a shorter time if such action is consistent with the protection of investors and the public interest. The Exchange satisfied the five-day pre-filing requirement. The Exchange further requested that the Commission waive the 30-day operative delay, as specified in Rule 19b–4(f)(6)(iii)[14] and designated the proposed rule change to become operative immediately to enable index options and options on ETFs to be traded on the Hybrid System immediately.

The Commission believes that it is consistent with the protection of investors and the public interest to designate the proposal immediately operative.[15] CBOE currently trades equity options on the Hybrid System. The Exchange represents that the Hybrid System will function in the exact same manner in index classes and options on ETFs as it does in equity classes. The Commission notes that the operation of the Hybrid System was previously the subject of a full comment period pursuant to section 19(b) of the Act.[16] The Commission does not believe that proposed rule change raises any new issues of regulatory concern. Accordingly, the Commission believes that there is good cause, pursuant to section 19(b)(3)(A)(iii) of the Act,[17] to designate that the proposal become operative immediately.

At anytime within 60 days of the filing of the proposed rule change, the

[9] This is the same as for equity options on Hybrid, which are governed by CBOE Rule 6.13. Non-Hybrid equity option classes continue to be governed by CBOE Rule 6.8.

[10] Any such rules, of course, would be filed with the Commission. Options on the OEX, SPX, DJX, and DIA trade under a Lead Market Maker (''LMM'') System. CBOE will not commence trading these products on Hybrid until it either adopts LMM rules applicable to Hybrid trading or until they convert to a DPM system. The Exchange currently has no intention of converting SPX, OEX, DJX, or DIA to a DPM system.

[11] 15 U.S.C. 78f(B)(5).

[12] 15 U.S.C. 78s(b)(3)(A).

[13] 17 CFR 240.19b–4(f)(6)(iii).

[14] *Id.*

[15] For purposes only of accelerating the operative date of this proposal, the Commission has considered the proposed rule's impact on efficiency, competition, and capital formation. 15 U.S.C. 78c(f).

[16] 15 U.S.C 78s(b).

[17] 15 U.S.C. 78s(b)(3)(A)(iii).

Commission may summarily abrogate such proposed rule change if it appears to the Commission that such action is necessary or appropriate in the public interest, for the protection of investors, or otherwise in furtherance of the purposes of the Act.[18]

IV. Solicitation of Comments

Interested persons are invited to submit written data, views and arguments concerning the foregoing, including whether the proposal is consistent with the Act. Persons making written submissions should file six copies thereof with the Secretary, Securities and Exchange Commission, 450 Fifth Street, NW., Washington, DC 20549–0609. Comments may also be submitted electronically at the following e-mail address: *rule-comments@sec.gov.* All comment letters should refer to File No. SR–CBOE–2003–57. The file number should be included on the subject line if e-mail is used. To help the Commission process and review your comments more efficiently, comments should be sent in hardcopy or by e-mail but not by both methods. Copies of the submission, all subsequent amendments, all written statements with respect to the proposed rule change that are filed with the Commission, and all written communications relating to the proposed rule change between the Commission and any person, other than those that may be withheld from the public in accordance with the provisions of 5 U.S.C. 552, will be available for inspection and copying in the Commission's Public Reference Room. Copies of such filing will also be available for inspection and copying at the principal office of the CBOE. All submissions should refer to the File No. SR–CBOE–2003–57 and should be submitted by January 20, 2004.

For the Commission, by the Division of Market Regulation, pursuant to delegated authority.[19]

Margaret H. McFarland,

Deputy Secretary.

[FR Doc. 03–31807 Filed 12–24–03; 8:45 am]

BILLING CODE 8010–01–M

[18] *See* Section 19(b)(3)(C) of the Act, 15 U.S.C. 78s(b)(3)(C).

[19] 17 CFR 200.30–3(a)(12).

SECURITIES AND EXCHANGE COMMISSION

[Release No. 34–48955; File No. SR–ISE–2003–31]

Self-Regulatory Organizations; Notice of Filing and Immediate Effectiveness of Proposed Rule Change by International Securities Exchange, Inc., Extending the Waiver of Its Marketing Fee

December 18, 2003.

Pursuant to section 19(b)(1) of the Securities Exchange Act of 1934 (''Act''),[1] and Rule 19b–4 thereunder,[2] notice is hereby given that on November 20, 2003, the International Securities Exchange, Inc. (''Exchange'' or ''ISE'') filed with the Securities and Exchange Commission (''Commission'') the proposed rule change as described in Items I, II, and III below, which Items have been prepared by the ISE. The Commission is publishing this notice to solicit comments on the proposed rule change from interested persons.

I. Self-Regulatory Organization's Statement of the Terms of Substance of the Proposed Rule Change

The Exchange is proposing to extend the waiver of its marketing fee until June 30, 2004.

II. Self-Regulatory Organization's Statement of the Purpose of, and Statutory Basis for, the Proposed Rule Change

In its filing with the Commission, the ISE included statements concerning the purpose of, and basis for, the proposed rule change and discussed any comments it received on the proposed rule change. The text of these statements may be examined at the places specified in Item IV below. The ISE has prepared summaries, set forth in sections A, B, and C below, of the most significant aspects of such statements.

A. Self-Regulatory Organization's Statement of the Purpose of, and Statutory Basis for, the Proposed Rule Change

1. Purpose

The purpose of the proposed rule change is to amend the ISE's Schedule of Fees to extend the waiver of its marketing fee until June 30, 2004.[3] That waiver currently is scheduled to expire on December 31, 2003.

2. Statutory Basis

The Exchange believes that the proposed rule change is consistent with the requirement of section 6(b)(4) of the Act[4] that an exchange have an equitable allocation of reasonable dues, fees and other charges among its members and other persons using its facilities. The Exchange believes that by extending the fee waiver it is lessening the cost of trading on the ISE and thus encouraging greater competition between exchanges.

B. Self-Regulatory Organization's Statement on Burden on Competition

The ISE does not believe that the proposed rule change will impose any inappropriate burden on competition.

C. Self-Regulatory Organization's Statement on Comments on the Proposed Rule Change Received from Members, Participants, or Others

No written comments were either solicited or received.

III. Date of Effectiveness of the Proposed Rule Change and Timing for Commission Action

The foregoing rule change has become effective pursuant to section 19(b)(3)(A) of the Act[5] and Rule 19b–4(f)(2)[6] thereunder. At any time within 60 days of the filing of such proposed rule change, the Commission may summarily abrogate such rule change if it appears to the Commission that such action is necessary or appropriate in the public interest, for the protection of investors, or otherwise in furtherance of the purposes of the Act.

IV. Solicitation of Comments

Interested persons are invited to submit written data, views, and arguments concerning the foregoing, including whether the proposal is consistent with the Act. Persons making written submissions should file six copies thereof with the Secretary, Securities and Exchange Commission, 450 Fifth Street, NW., Washington, DC 20549–0609. Comments may also be

[1] 15 U.S.C. 78s(b)(1).

[2] 17 CFR 240.19b–4.

[3] The Commission notes that the ISE's marketing fee is $.10 per contract and applies to market makers only for each public customer contract executed. In its filing initially adopting this fee, the ISE stated that the purpose of the fee is to provide the ISE with a source of funding for marketing efforts aimed at increasing order flow from Electronic Access Members to the Exchange. *See* Securities Exchange Act Release No. 44101 (March 26, 2001), 66 FR 17590 (April 2, 2001) (SR–ISE–01–06) (implementing the marketing fee). The marketing fee was first waived in SR–ISE–2002–16. Securities Exchange Act Release No. 46189 (July 11, 2002), 67 FR 27587 (July 19, 2002). The waiver has subsequently been extended twice. *See* Securities Exchange Act Release Nos. 46976 (December 9, 2002), 67 FR 72116 (December 16, 2002) (SR–ISE–2002–26); and 48129 (July 3, 2003), 68 FR 41409 (July 11, 2003) (SR–ISE–2003–16).

[4] 15 U.S.C. 78f(b)(4).

[5] 15 U.S.C. 78s(b)(3)(A).

[6] 17 CFR 19b–4(f)(2).

submitted electronically at the following e-mail address: *rule-comments@sec.gov.* All comment letters should refer to File No. SR–ISE–2003–31. This file number should be included on the subject line if e-mail is used. To help the Commission process and review your comments more efficiently, comments should be sent in hardcopy or by e-mail but not by both methods.

Copies of the submission, all subsequent amendments, all written statements with respect to the proposed rule change that are filed with the Commission, and all written communications relating to the proposed rule change between the Commission and any person, other than those that may be withheld from the public in accordance with the provisions of 5 U.S.C. 552, will be available for inspection and copying in the Commission's Public Reference Room. Copies of such filing will also be available for inspection and copying at the principal office of the ISE. All submissions should refer to File No. ISE–2003–31 and should be submitted by January 20, 2004.

For the Commission, by the Division of Market Regulation, pursuant to delegated authority.[7]

Margaret H. McFarland,

Deputy Secretary.

[FR Doc. 03–31806 Filed 12–24–03; 8:45 am]

BILLING CODE 8010–01–P

[7] 17 CFR 200.30–3(a)(12).

SECURITIES AND EXCHANGE COMMISSION

[Release No. 34–48958; File No. SR–NYSE–2003–29]

Self-Regulatory Organizations; New York Stock Exchange Inc.; Notice of Filing of Proposed Rule Change to Amend Rule 412 and its Interpretation Relating to Partial Customer Account Transfers

December 18, 2003.

Pursuant to section 19(b)(1) of the Securities Exchange Act of 1934 (''Act''),[1] notice is hereby given that on October 1, 2003, the New York Stock Exchange Inc. (''NYSE'') filed with the Securities and Exchange Commission (''Commission'') the proposed rule change as described in Items I, II, and III below, which items have been prepared primarily by the NYSE. The Commission is publishing this notice to solicit comments on the proposed rule change from interested parties.

[1] 15 U.S.C. 78s(b)(1).

I. Self-Regulatory Organization's Statement of the Terms of Substance of the Proposed Rule Change

NYSE proposes to amend Rule 412 and the Interpretation of Rule 412 in order to apply the same procedural standards regarding use of the Automated Customer Account Transfer System (''ACATS'') to both standard and partial customer account transfers.

II. Self-Regulatory Organization's Statement of the Purpose of, and Statutory Basis for, the Proposed Rule Change

In its filing with the Commission, NYSE included statements concerning the purpose of and basis for the proposed rule change and discussed any comments it received on the proposed rule change. The text of these statements may be examined at the places specified in Item IV below. The NYSE has prepared summaries, set forth in sections (A), (B), and (C) below, of the most significant aspects of these statements.[2]

(A) Self-Regulatory Organization's Statement of the Purpose of, and Statutory Basis for, the Proposed Rule Change

Rule 412 of the NYSE's Rules (''Customer Account Transfer Contracts'') prescribes procedures for member organizations to transfer customer accounts. It requires use of the Automated Customer Account Transfer Service (''ACATS''), an electronic system administered by the National Securities Clearing Corporation (''NSCC'') to facilitate the transfer of customer assets between broker-dealers. Since its inception in 1985, numerous enhancements to ACATS and to Rule 412 allowed for faster and more efficient transfers of customer accounts. For example, the most recent amendments to the Interpretation of Rule 412 have provided for the expedited transfer of accounts containing third party or proprietary products (*e.g.*, mutual funds).[3]

Currently, the requirements of Rule 412 and its Interpretation apply only to ''standard'' transfers (*i.e.*, instances where account assets in their entirety are transferred from one member organization to another) processed through ACATS. While ACATS is also utilized to process ''partial'' or ''non-standard'' transfers (*i.e.*, the transfer of specifically designated assets from an account held at one member organization to an account held at another member organization), Rule 412 currently does not require that partial transfers be accomplished in accordance with Rule 412 timeframes and does not require use of automated processing capabilities of ACATS.

There is strong industry support to generally apply the same procedural standards, where applicable, to both standard and partial transfers of customer account assets. NYSE has worked closely with industry representatives in the development of amendments to that purpose. The proposed amendments are expected to significantly expedite partial transfers and to increase accountability through use of ACATS. This, in turn, will improve customers' services and will reduce customers' problems related to transfers.

1. Partial Transfers

The requirements of Rule 412 and its Interpretation, as currently applied to standard transactions, include specified response times between a delivering and a receiving firm within which to verify assets, resolve discrepancies, and complete the transfer. Standard transfers processed through ACATS are also subject to the automated processing of transfer-related fails (*e.g.*, monies posted by a delivering firm where the security to be transferred is not transferred), reclaims (*e.g.*, claims by delivering firm for the return of securities transferred),and of residual credits (*e.g.*, transfer of dividends, *etc.,* received after an account has been transferred).

The NYSE proposes to amend Rule 412 and its Interpretation that would generally apply the same procedural standards to both standard and partial transfers processed through ACATS. The proposed amendments would mandate use of ACATS for partial transfers unless otherwise specifically requested by a customer.[4] For example, customers would not be precluded from using alternate authorized instructions to effect partial transfers.

However, certain aspects of Rule 412 and its Interpretation, as proposed to be amended, would be applicable to standard transfers but not partial transfers. The amendments would

[2] The Commission has modified the text of the summaries prepared by the NYSE.

[3] Securities Exchange Act Release No. 44596 (July 26, 2001), 66 FR 40306 (August 2, 2001) (SR–NYSE–00–61). See also NYSE Information Memorandum No. 01–23 (August 16, 2001).

[4] As proposed, Rule 412(e)(1) would provide for an exception to the members' obligation to accomplish transfers in accordance with NSCC's rules when the customer authorizes alternative instructions to transfer ''specifically designated assets.'' The phrase ''specifically designated assets'' refers to partial transfers only. Telephone conversation between the NYSE, NSCC, and Commission staff (November 20, 2003).

distinguished between the transfer of security account assets ''in whole'' (*i.e.*, standard transfers) and security account assets ''in specifically designated part'' (*i.e.*, partial transfers). This distinction is necessary given differing customer and broker-dealer obligations that result from transferring an entire account from a delivering firm as opposed to obligations related to the transfer of specified assets from an account that will remain active at the delivering firm.

For example, should a customer request the transfer of an entire account, she must authorize the liquidation of any nontransferable proprietary money market fund assets in the account and the transfer of any resulting credit balance to the receiving organization.[5] In addition, any residual credit balance resulting from dividend payments subsequent to the transfer must be forwarded to the receiving organization.[6] Clearly, these are obligations that would attach only in instances of account asset transfers in whole, and not in instances of specifically designated asset transfers.

Another procedural distinction between the transfer of an entire account and the transfer of specifically designated asset transfers can be found in the treatment of ''non-transferable assets'' which are defined as either a proprietary product of a delivering organization or an asset that is the product of a third party (*e.g.*, a mutual fund). When transferring account assets in whole, the Interpretation of Rule 412 requires that a customer be provided a letter with disposition options consistent with closing out an account regarding any non-transferable assets.[7] This requirement would not be applicable to partial transfers since a request to transfer specifically designated assets would not result in closing the customer's account at the delivering firm.

2. Customer Authorization

Rule 412 and its Interpretation currently make reference to ''written'' customer authorization requirements. For example, Rule 412(a) requires customers to give ''written notice'' of their intention to transfer an account from one member organization to another. Rule 412(b)(1) further indicates that such notice be in the form of a ''signed'' broker-to-broker transfer instruction. Likewise, the Interpretation of Rule 412(a) refers to the requirement of an authorized ''letter'' from customers who intend to transfer a portion of an account outside ACATS, and the Interpretation of Rule 412(b)(1) refers to the ''transfer instruction form the customer is required to complete and sign.''

Proposed amendments to Rule 412(a) would clarify the scope of such customer authorization to include electronic signatures ''in a format recognized as valid under federal law to conduct interstate commerce.'' This modification and others in the filing contemplate legal alternatives to ''pen and paper'' methods of customer authorization on the condition that such methods otherwise comply with Rule 412 and its Interpretation.

3. Prescribed Forms

The Interpretation of Supplementary Material .30 to Rule 412 currently requires that member organizations use ''the transfer instructions and provide the reports prescribe by the Exchange when accomplishing account transfers pursuant to Rule 412 * * *'' and that such instructions and reports must be the same as or ''substantially similar'' to those required by NSCC. Since NSCC no longer requires specific formats with respect to transfer instructions or reports, the NYSE is proposing that the Interpretation to Supplementary Material .30 be deleted.

In order to allow member organizations sufficient time to develop and implement necessary system changes to comply with amended Rule 412, the NYSE proposes to set an effective date six months from Commission approval of the proposed amendments.

Section 6(b)(5) of the Act that requires rules of an exchange are designed to promote just and equitable principles of trade, to remove impediments to and to perfect the mechanism of a free and open market and a national market system and, in general, to protect investors and the public interest.[8] The NYSE believes that the proposed rule is consistent with its obligations under section 6(b)(5) of the Act because these interests are served when the procedures governing the transfer of customer accounts are made more efficient.

(B) Self-Regulatory Organization's Statement on Burden on Competition

NYSE does not believe that the proposed rule change will have an impact on or impose a burden on competition.

(C) Self-Regulatory Organization's Statement on Comments on the Proposed Rule Change Received From Members, Participants or Others

No written comments relating to the proposed rule change have been solicited or received. NYSE will notify the Commission of any written comments it receives.

III. Date of Effectiveness of the Proposed Rule Change and Timing for Commission Action

Within thirty-five days of the date of publication of this notice in the **Federal Register** or within such longer period (i) as the Commission may designate up to ninety days of such date if it finds such longer period to be appropriate and publishes its reasons for so finding or (ii) as to which the self-regulatory organization consents, the Commission will:

(A) by order approve such proposed rule change or

(B) institute proceedings to determine whether the proposed rule change should be disapproved.

IV. Solicitation of Comments

Interested persons are invited to submit written data, views, and arguments concerning the foregoing, including whether the proposed rule change is consistent with the Act. Persons making written submissions should file six copies thereof with the Secretary, Securities and Exchange Commission, 450 Fifth Street, NW., Washington, DC 20549–0609. Comments may also be submitted electronically at the following e-mail address: *rule-comments@sec.gov.* To help the Commission process and review your comments more efficiently, comments should be sent in hardcopy or by e-mail but not by both methods. Copies of the submission, all subsequent amendments, all written statements with respect to the proposed rule change that are filed with the Commission, and all written communications relating to the proposed rule change between the Commission and any person, other than those that may be withheld from the public in accordance with the provisions of 5 U.S.C. 552, will be available for inspection and copying in the Commission's Public Reference Section, 450 Fifth Street, NW., Washington, DC 20549. Copies of such filing also will be available for inspection and copying at the principal office of the NYSE. All submissions should refer to File No. SR–NYSE–2003–29 and should be submitted by January 20, 2004.

[5] Rule 412 Interpretation (b)(1)/01.

[6] NYSE Rule 412(e)(3) and (e)(4).

[7] Rule 412 Interpretation (b)(1)/06.

[8] 15 U.S.C. 78f(b)(5).

For the Commission by the Division of Market Regulation, pursuant to delegated authority.[9]

Margaret H. McFarland,

Deputy Secretary.

[FR Doc. 03–31805 Filed 12–24–03; 8:45 am]

BILLING CODE 8010–01–P

SECURITIES AND EXCHANGE COMMISSION

[Release No. 34–48928; File No. SR–PCX–2003–59]

Self-Regulatory Organizations; Notice of Filing of a Proposed Rule Change and Amendment No. 1 Thereto by the Pacific Exchange, Inc. To Amend Its Rules Governing Market-Maker Obligations on the Archipelago Exchange

December 16, 2003.

Pursuant to section 19(b)(1) of the Securities Exchange Act of 1934 (''Act''),[1] and Rule 19b–4 thereunder,[2] notice is hereby given that on October 21, 2003, the Pacific Exchange, Inc. (''PCX'' or ''Exchange''), through its wholly-owned subsidiary PCX Equities, Inc. (''PCXE''), filed with the Securities and Exchange Commission (''Commission'') the proposed rule change as described in Items I, II and III below, which Items have been substantially prepared by the PCX. On December 2, 2003, the PCX filed Amendment No. 1 to the proposed rule change.[3] The Commission is publishing this notice to solicit comments on the proposed rule change, as amended, from interested persons.

I. Self-Regulatory Organization's Statement of the Terms of Substance of the Proposed Rule Change

The PCX proposes to amend its rules governing Market Maker obligations on the Archipelago Exchange (''ArcaEx''), the equities trading facility of PCXE. Specifically, the Exchange proposes to modify PCXE Rule 7.25(b) to eliminate the stipulation that Market Makers must become Odd Lot Dealers in the securities in which they are registered. Furthermore, the Exchange proposes to modify PCXE Rule 7.34(b) to eliminate the requirement that Market Makers must maintain one Cleanup Order for all of the securities in which they are registered. The text of the proposed rule change is set forth below. Proposed new language is in *italics;* proposed deletions are in [brackets].

* * * * *

Rule 7

Equities Trading

Registration of Odd Lot Dealers

Rule 7.25(a)—No change.

(b) Market Makers Registered in a Security. For each security in which a Market Maker is registered, the Market Maker [must] *may* become an Odd Lot Dealer in that security.

(c)–(e)—No change.

Trading Sessions

Rule 7.34(a)—No change.

(b) *Market Maker Obligations.*

(1)—No change.

(2) Market Makers [must] *may, at their discretion,* maintain one Cleanup Order for [all] *any* securities in which they are registered for each Market Order Auction.

(c)–(f)—No change.

* * * * *

II. Self-Regulatory Organization's Statement of the Purpose of, and Statutory Basis for, the Proposed Rule Change

In its filing with the Commission, the PCX included statements concerning the purpose of, and basis for, the proposed rule change and discussed any comments it received on the proposed rule change. The text of these statements may be examined at the places specified in Item IV below. The Exchange prepared summaries, set forth in Sections A, B, and C below, of the most significant aspects of such statements.

A. Self-Regulatory Organization's Statement of the Purpose of, and Statutory Basis for, the Proposed Rule Change

1. Purpose

As part of its continuing efforts to enhance participation on the ArcaEx, the PCX is proposing to eliminate the stipulation that Market Makers[4] must become Odd Lot Dealers[5] in the securities for which they are registered. In addition, the Exchange is seeking to eliminate the requirement for Market Makers to maintain Cleanup Orders.[6] The Exchange believes these restrictions currently impose a competitive barrier vis-à-vis other market centers in attracting Market Maker participation on ArcaEx because competing market centers do not impose such requirements.[7] Hence, the Exchange believes that removal of these restrictions will place the ArcaEx at competitive parity with other market centers.

Currently, PCXE Rule 7.25(b) requires Market Makers to become Odd Lot Dealers in each security in which they are registered. Once registered, an Odd Lot Dealer is obligated to maintain an Odd Lot Tracking Order[8] during each day in which the PCXE is open for business for each security in which the Odd Lot Dealer is registered. The Exchange proposes to modify the requirement for all Market Makers to become Odd Lot Dealers making it optional rather than a requirement. The Exchange represents that the overall system impact from elimination of this requirement would be minimal due to the fact that current Market Maker activity on the ArcaEx affects a small number of securities.[9]

Furthermore, pursuant to PCXE Rule 7.34(b), Market Makers are required to maintain one Cleanup Order[10] in all

[9] 17 CFR 200.30–3(a)(12).

[1] 15 U.S.C. 78s(b)(1).

[2] 17 CFR 240.19b–4.

[3] Amendment No. 1 replaces the originally filed Form 19b–4 in its entirety.

[4] *See* PCXE Rule 1.1(u) (definition of ''Market Maker''). *See also* PCXE Rules 7.20–7.23 relating to the registration and obligations of Market Makers.

[5] *See* PCXE Rule 1.1(gg) (definition of ''Odd Lot Dealer''). *See also* PCXE Rule 7.25 relating to the registration of Odd Lot Dealers.

[6] *See* PCXE Rule 7.31(u) (definition of ''Cleanup Order'').

[7] *See e.g.,* NASD Rules 4611 and 4612.

[8] If an unfilled order or portion of an order that enters the Tracking Order Process is an odd lot, ArcaEx would match the order against any Odd Lot Tracking Orders (''OLTO''), using the same rotation process as the Tracking Order Process. An OLTO, which could only be submitted to ArcaEx by a registered Odd Lot Dealer, is a Tracking Order in which: (1) The maximum aggregate size is unlimited; (2) the maximum tradeable size is 99 shares; (3) the price is set at the NBBO; (4) the security is one in which the Odd Lot Dealer is registered as such; and, (5) the instruction would have to be in effect for the duration of Core Trading Hours. *See* PCXE Rule 7.31(f)(3), 7.31(g), and 7.37(c).

[9] Currently, odd lots are able to receive execution by matching to other odd lot or round lot orders. Under the proposed rule change, odd lots would be handled in the same manner. Hence, elimination of the requirement for Market Makers to become an Odd Lot Dealer would have minimal impact on how odd lots are treated in the marketplace as odd lots interact with round lot orders on a pure price, time priority basis.

[10] Cleanup Up Orders are only applicable to Market Order Auctions. Cleanup Orders (1) could be submitted only by Market Makers; (2) would have to be submitted to ArcaEx before 6:15 a.m. (Pacific time) and remain in effect until the conclusion of the Market Order Auction; (3) would have to be 2500 shares in size; (4) would have to be entered as both buy or sell orders, provided, however, the Cleanup Order could be executed only on the side of the market opposite the Imbalance; (5) would be executed at the Indicative Match Price as of the time of the Market Order Auction; and (6) would be executed only if: (i) there was an Imbalance of eligible orders at the conclusion of the Market Order Auction, as provided in proposed PCXE Rule 7.35; and (ii) the Imbalance is less than or equal to aggregate size of all Cleanup Orders in the relevant security. If there is an Imbalance and Cleanup Orders would be executed, the market orders which make up the Imbalance would be divided equally among, and allocated to, all Market

securities for which they are registered for each Market Order Auction.[11] The Exchange proposes to allow Market Makers to submit Cleanup Orders at their discretion. As the Cleanup Orders are only utilized during Market Order Auction (when there is an imbalance of order), as well as for the reasons stated above, the impact on the system from removing this requirement would be minimal on the ArcaEx.

The Exchange believes eliminating the aforementioned requirements will facilitate additional Market Maker participation on ArcaEx and will further enhance order interaction, provide greater depth in liquidity, and foster price competition. Moreover, the Exchange believes that the elimination of such requirements will place ArcaEx on a level playing field with other market centers and allow ArcaEx to fairly compete for Market Maker participation.

2. Statutory Basis

The PCX believes that the rule change is consistent with section 6(b) of the Act in general [12] and section 6(b)(5) of the Act in particular.[13] The Exchange believes that the proposed rule change is intended to remove impediments to and perfect the mechanism for a free and open market and a national market system, and, in general, to protect investors and the public interest.

B. Self-Regulatory Organization's Statement on Burden on Competition

The proposed rule change does not impose any burden on competition that is not necessary or appropriate in furtherance of the purposes of the Act.

C. Self-Regulatory Organization's Statement on Comments on the Proposed Rule Change Received From Members, Participants or Others

The Exchange has not solicited, and does not intend to solicit, comments on this proposed rule change. The Exchange has not received any unsolicited written comments from members or other interested parties.

III. Date of Effectiveness of the Proposed Rule Change and Timing for Commission Action

Within 35 days of the date of publication of this notice in the **Federal Register** or within such longer period (i) as the Commission may designate up to 90 days of such date if it finds such longer period to be appropriate and publishes its reasons for so finding or (ii) as to which the self-regulatory organization consents, the Commission will:

(A) By order approve such proposed rule change, or

(B) Institute proceedings to determine whether the proposed rule change should be disapproved.

IV. Solicitation of Comments

Interested persons are invited to submit written data, views and arguments concerning the foregoing, including whether the amended proposal is consistent with the Act. Persons making written submissions should file six copies thereof with the Secretary, Securities and Exchange Commission, 450 Fifth Street, NW., Washington, DC 20549–0609. Comments may also be submitted electronically at the following e-mail address: *rule-comments@sec.gov.* All comment letters should refer to File No. SR–PCX–2003–59. This file number should be included on the subject line if e-mail is used. To help the Commission process and review your comments more efficiently, comments should be sent in hard copy or by e-mail, but not by both methods. Copies of the submission, all subsequent amendments, all written statements with respect to the proposed rule change that are filed with the Commission, and all written communications relating to the proposed rule change between the Commission and any person, other than those that may be withheld from the public in accordance with the provisions of 5 U.S.C. 552, will be available for inspection and copying in the Commission's Public Reference Room. Copies of such filing will also be available for inspection and copying at the principal office of the PCX. All submissions should refer to File No. SR–PCX–2003–59 and should be submitted by January 20, 2004.

For the Commission, by the Division of Market Regulation, pursuant to delegated authority.[14]

Margaret H. McFarland,

Deputy Secretary.

[FR Doc. 03–31809 Filed 12–24–03; 8:45 am]

BILLING CODE 8010–01–P

makers registered in the relevant security and executed against such market makers' Cleanup Orders. If no Imbalance exists at the time of the Market Order Auction, all Cleanup Orders would be cancelled at that time.

[11] *See* PCXE Rule 7.35(c) for a discussion of the Market Order Auction process.

[12] 15 U.S.C. 78f(b).

[13] 15 U.S.C. 78f(b)(5).

[14] 17 CFR 200.30–3(a)(12).

SECURITIES AND EXCHANGE COMMISSION

[Release No. 34–48936; File No. SR–PCX–2003–32]

Self-Regulatory Organizations; Pacific Stock Exchange, Inc.; Order Granting Approval of Proposed Rule Change to Incorporate New PCX Rules Into Its Minor Rule Plan

December 17, 2003.

On July 8, 2003, the Pacific Stock Exchange, Inc. (''PCX'' or ''Exchange'') filed with the Securities and Exchange Commission (''Commission''), pursuant to section 19(b)(1) of the Securities Exchange Act of 1934 (''Act'') [1] and Rule 19b–4 thereunder,[2] a proposed rule change to adopt new PCX Rules 10.13(h)(40)–(44) and 10.13(k)(i)(40)–(44) in order to incorporate five existing PCX rules into the Minor Rule Plan and Recommended Fine Schedule.

The proposed rule change was published for comment in the **Federal Register** on November 12, 2003.[3] The Commission received no comments on the proposal.

The Commission finds that the proposed rule change is consistent with the requirements of the Act and the rules and regulations thereunder applicable to a national securities exchange [4] and, in particular, the requirements of section 6 of the Act [5] and the rules and regulations thereunder. In particular, the Commission believes that the proposed rule change is consistent with section 6(b)(6) [6] of the Act because it should enable the Exchange to appropriately discipline its members and others associated with its members for violation of the provisions of this title, the rules or regulations thereunder, or the rules of the Exchange.

In approving this proposed rule change, the Commission in no way minimizes the importance of compliance with these rules, and all other rules subject to the imposition of fines under the Exchange's minor rule violation plan. The Commission believes that the violation of any self-regulatory organization's rules, as well as Commission rules, is a serious matter. However, in an effort to provide the Exchange with greater flexibility in

[1] 15 U.S.C. 78s(b)(1).

[2] 17 CFR 240.19b–4.

[3] *See* Securities Exchange Act Release No. 48746 (November 4, 2003), 68 FR 64182.

[4] In approving this proposed rule change, the Commission has considered the proposed rule's impact on efficiency, competition, and capital formation. 15 U.S.C. 78c(f).

[5] 15 U.S.C. 78f.

[6] 15 U.S.C. 78f(b)(6).

addressing certain violations, the Exchange's minor rule violation plan provides a reasonable means to address rule violations that do not rise to the level of requiring formal disciplinary proceedings. The Commission expects that the PCX will continue to conduct surveillance with due diligence, and make a determination based on its findings whether fines of more or less than the recommended amount are appropriate for violations of rules under the Exchange's minor rule violation plan, on a case by case basis, or if a violation requires formal disciplinary action.

In addition, the Commission notes that proposed rules 10.13(h)(40), 10.13(h)(41), and 10.13(h)(43) relate to market making obligations. The Commission believes that only the most technical and non-substantive violations of a market maker's obligations should be handled pursuant to a minor rule plan.[7]

It is therefore ordered, pursuant to section 19(b)(2) of the Act,[8] that the proposed rule change (SR–PCX–2003–32) be, and it hereby is, approved.

For the Commission, by the Division of Market Regulation, pursuant to delegated authority.[9]

Margaret H. McFarland,

Deputy Secretary.

[FR Doc. 03–31808 Filed 12–24–03; 8:45 am]

BILLING CODE 8010–01–P

[7] *See, e.g.,* Securities Exchange Act Release No. 27878 (April 14, 1990), 55 FR 13345, [SR–NYSE–89–44].

[8] 15 U.S.C. 78s(b)(2).

[9] 17 CFR 200.30–3(a)(12).

SECURITIES AND EXCHANGE COMMISSION

[Release No. 34–48947; File No. SR–Phlx–2003–81]

Self-Regulatory Organizations; Notice of Filing and Order Granting Accelerated Approval of a Proposed Rule Change by the Philadelphia Stock Exchange, Inc. Relating to a Pilot Program To Deploy the Options Floor Broker Management System

December 18, 2003.

Pursuant to section 19(b)(1) of the Securities Exchange Act of 1934 (''Act'')[1], and Rule 19b–4[2] thereunder, notice is hereby given that on December 17, 2003, the Philadelphia Stock Exchange, Inc. (''Phlx'' or ''Exchange'') filed with the Securities and Exchange Commission (''SEC'' or ''Commission'') the proposed rule change as described in Items I and II below, which Items have been prepared by the Phlx. The Commission is publishing this notice to solicit comments on the proposed rule change from interested persons and to approve the proposal, on an accelerated basis.

I. Self-Regulatory Organization's Statement of the Terms of Substance of the Proposed Rule Change

The Exchange proposes to extend its pilot program pertaining to the Options Floor Broker Management System (the ''System'') from November 14, 2003, until February 6, 2004.[3] The System is a new component of the Exchange's Automated Options Market (AUTOM) and Automatic Execution (AUTO–X) System.[4]

II. Self-Regulatory Organization's Statement of the Purpose of, and Statutory Basis for, the Proposed Rule Change

In its filing with the Commission, the Phlx included statements concerning the purpose of, and basis for, the proposed rule change and discussed any comments it received on the proposed rule change. The text of these statements may be examined at the places specified in Item III below. The Phlx has prepared summaries, set forth in sections A, B, and C below, of the most significant aspects of such statements.

A. Self-Regulatory Organization's Statement of the Purpose of, and Statutory Basis for, the Proposed Rule Change

1. Purpose

The purpose of the proposed rule change is to extend the effectiveness of the rules governing the System beyond the current effective date of November 14, 2003, in order to continue to have rules in place concerning the System and to ensure that Floor Brokers using the System during the continuing deployment would not be in violation of current Exchange rules regarding ticket marking requirements. The rules had previously been effective through August 29, 2003, extended through September 12, 2003, and extended again through November 14, 2003.[5]

The System is designed to enable Floor Brokers and/or their employees to enter, route and report transactions stemming from options orders received on the Exchange. Floor Brokers or their employees access the System through an electronic Exchange-provided handheld device on which they have the ability to enter the required information as set forth in Phlx Rule 1063(e), either from their respective posts on the options trading floor or in the trading crowd. The System will eventually replace the Exchange's current Floor Broker Order Entry System (''FBOE''),[6] as part of a roll-out of the new System floor-wide.

All of the rules pertaining to the System effective November 14, 2003 are proposed to be extended until February 6, 2004, including: Exchange Rules 1014(g), 1015, 1051, 1063, 1064, and 1080.06, as well as Option Floor Procedure Advices (''Advice'') A–11, B–6, B–8, C–2, C–3, F–1, F–2, and F–4.

The Exchange believes that the System will enable Floor Brokers to handle orders they represent more efficiently, and will further enable the Exchange to comply with the audit trail requirement for non-electronic orders required under the Order Instituting Public Administrative Proceedings Pursuant to section 19(h)(1) of the

[1] 15 U.S.C. 78s(b)(1).

[2] 17 CFR 240.19b–4.

[3] On July 31, 2003, the Exchange filed a proposed rule change to implement a pilot program to deploy the Exchange's new System. The proposed rule change was noticed, and accelerated approval was granted thereto, on July 31, 2003. The pilot was scheduled to expire on August 29, 2003. *See* Securities Exchange Act Release No. 48266 (July 31, 2003), 68 FR 152 (August 7, 2003) (SR–Phlx–2003–56). On August 29, the Commission extended the pilot to September 12, 2003. *See* Securities Exchange Act Release No. 48425 (August 29, 2003), 68 FR 53210 (September 9, 2003) (SR–Phlx–2003–60). On September 12, 2003, the Commission extended the pilot again until November 14, 2003. *See* Securities Exchange Act Release No. 48490 (September 12, 2003), 68 FR 54926 (September 19, 2003). In order to avoid a lapse in the effectiveness of this pilot, the Commission now is approving the Exchange's proposal to extend the rule from November 14, 2003 until February 6, 2004. The Exchange has also filed for permanent approval of the proposed rules. *See* Securities Exchange Act Release No. 48265 (July 31, 2003), 68 FR 47137 (August 7, 2003) (SR–Phlx–2003–40). The Exchange acknowledges that SR–Phlx–2003–40 and Amendment No. 1 thereto are subject to public comment, which may result in amendments to the proposed rules.

[4] AUTOM is the Exchange's electronic order delivery, routing, execution and reporting system, which provides for the automatic entry and routing of equity option and index option orders to the Exchange trading floor. Orders delivered through AUTOM may be executed manually, or certain orders are eligible for AUTOM's automatic execution feature, AUTO–X. Equity option and index option specialists are required by the Exchange to participate in AUTOM and its features and enhancements. Option orders entered by Exchange members into AUTOM are routed to the appropriate specialist unit on the Exchange trading floor. *See* Exchange Rule 1080.

[5] *See* note 3, *supra.*

[6] *See* Securities Exchange Act Release No. 41524 (June 14, 1999), 64 FR 33127 (June 21, 1999) (SR–Phlx–99–11). The FBOE, a component of AUTOM, currently provides a means for (but does not require) Floor Brokers to route eligible orders to the specialist's post, consistent with the order delivery criteria of the AUTOM System set forth in Exchange Rule 1080(b). The new System would include the same functionality as the FBOE, in addition to providing an electronic audit trail for non-electronic orders received by Floor Brokers by way of the entry of the required information in proposed Phlx Rule 1063(e).

Securities Exchange Act of 1934, Making Findings and Imposing Sanctions.[7]

2. Statutory Basis

The Exchange believes that the proposed rule change is consistent with section 6(b) of the Act[8] in general, and furthers the objectives of section 6(b)(5) of the Act[9] in particular, in that it is designed to promote just and equitable principles of trade, remove impediments to and perfect the mechanisms of a free and open market and a national market system, and to protect investors and the public interest, by providing a System that enables Floor Brokers to handle orders they represent more efficiently, while enabling the Exchange to comply with the requirement in the Order to provide an electronic audit trail for non-electronic orders entered on the Exchange.

B. Self-Regulatory Organization's Statement on Burden on Competition

The Exchange does not believe that the proposed rule change will impose any inappropriate burden on competition.

C. Self-Regulatory Organization's Statement on Comments on the Proposed Rule Change Received From Members, Participants, or Others

No written comments were either solicited or received.

III. Solicitation of Comments

Interested persons are invited to submit written data, views and arguments concerning the foregoing, including whether the proposed rule change is consistent with the Act. Persons making written submissions should file six copies thereof with the Secretary, Securities and Exchange Commission, 450 Fifth Street, NW., Washington, DC 20549–0609. Comments may also be submitted electronically at the following e-mail address: *rule-comments@sec.gov.* All comment letters should refer to File No. SR–Phlx–2003–81. The file number should be included on the subject line if e-mail is used. To help the Commission process and review your comments more efficiently, comments should be sent in hardcopy or by e-mail but not by both methods. Copies of the submission, all subsequent amendments, all written statements with respect to the proposed rule change that are filed with the Commission, and all written communications relating to the proposed rule change between the Commission and any person, other than those that may be withheld from the public in accordance with the provisions of 5 U.S.C. 552, will be available for inspection and copying in the Commission's Public Reference Room. Copies of such filing will also be available for inspection and copying at the principal office of the Phlx. All submissions should refer to File No. SR–Phlx–2003–81 and should be submitted by January 20, 2004.

IV. Discussion

After careful review, the Commission finds that the proposed rule change is consistent with the requirements of the Act and the rules and regulations thereunder applicable to a national securities exchange.[10] In particular the Commission finds that the proposed rule to extend the rules relating to the System on a pilot basis until February 6, 2004 is consistent with section 6(b)(5) of the Act, which requires that the rules of an exchange be designed to promote just and equitable principles of trade, remove impediments to and perfect the mechanism of a free and open market and a national securities System, and protect investors and the public interest.[11]

The Commission finds good cause for approving the proposed rule change prior to the thirtieth day after the date of the publication of notice thereof in the **Federal Register**. The Commission believes that granting accelerated approval to the proposed rule change on a pilot basis will allow the Exchange to have enforceable rules governing use of the Exchange's new System in effect prior to permanent approval of the rules, and will help ensure that members are properly trained and familiar with the rules. In addition, Commission is granting accelerated approval retroactively to November 14, 2003, in order to prevent a lapse in the effectiveness of the Exchange's rules governing operation of the System to ensure continuity of the pilot.

V. Conclusion

It is therefore ordered, pursuant to section 19(b)(2) of the Act,[12] that the proposed rule change (SR–Phlx–2003–81) is approved on an accelerated basis and is effective retroactively from November 14, 2003, on a pilot basis until February 6, 2004.

For the Commission, by the Division of Market Regulation, pursuant to delegated authority.[13]

Margaret H. McFarland,

Deputy Secretary.

[FR Doc. 03–31810 Filed 12–24–03; 8:45 am]

BILLING CODE 8010–01–P

[7] *See* Securities Exchange Act Release No. 43268 (September 11, 2000) and Administrative Proceeding File 3–10282 (the ''Order'').

[8] 15 U.S.C. 78f(b).

[9] 15 U.S.C. 78f(b)(5).

[10] In approving this proposed rule change, the Commission has also considered the proposed rule's impact on efficiency, competition, and capital formation. 15 U.S.C. 78c(f).

[11] 15 U.S.C. 78f(b)(5).

[12] 15 U.S.C. 78f(b)(2).

[13] 17 CFR 200.30–3(a)(12).

SECURITIES AND EXCHANGE COMMISSION

[Release No. 34–48954; File No. SR–SCCP–2003–04]

Self-Regulatory Organizations; Stock Clearing Corporation of Philadelphia; Order Approving a Proposed Rule Change Relating to Permanent Approval of SCCP's Restructured Limited Clearing Business

December 18, 2003.

On June 20, 2003, the Stock Clearing Corporation of Philadelphia (''SCCP'') filed with the Securities and Exchange Commission (''Commission'') a proposed rule change pursuant to section 19(b)(1) of the Securities Exchange Act of 1934 (''Act'').[1] Notice of the proposal was published in the **Federal Register** on October 30, 2003.[2] No comment letters were received. For the reasons discussed below, the Commission is approving the proposed rule change.

I. Description

This order permanently approves SCCP's business whereby it provides limited clearance and settlement services.

A. Background

Through an agreement dated June 18, 1997 (''Agreement''), among SCCP, the Philadelphia Stock Exchange, Inc. (''Phlx''), the Philadelphia Depository Trust Company (''Philadep''), the National Securities Clearing Corporation (''NSCC''), and The Depository Trust Company (''DTC''), Philadep and SCCP transferred most of their depository and clearance services to DTC and NSCC. As a result, SCCP stopped providing its continuous net settlement (''CNS'') system for conducting settlements between SCCP and its participants and its cash settlement services attendant to Philadep's same-day funds settlement system and the Philadep settlement process. However, pursuant to the Agreement, SCCP continued to offer

[1] 15 U.S.C. 78s(b)(1).

[2] Securities Exchange Act Release No. 48692 (Oct. 24, 2003), 68 FR 61846.

limited clearing and settlement services to Phlx members.[3]

In December 1997, the Commission approved proposed rule changes that implemented the Agreement.[4] These rule changes reflected Philadep's withdrawal from the depository business and temporarily approved for one year SCCP's restructured and limited clearance and settlement business.[5] Subsequently, the Commission has extended the temporary approval several times so that SCCP could continue to offer restructured and limited clearance and settlement services.[6]

B. SCCP's Proposed Rule Change

In its current rule filing, SCCP proposed that the Commission permanently approve SCCP's limited clearance and settlement business. SCCP believes that its restructured operations have functioned consistent with its original proposed rule change and are functioning well under actual working conditions.

Accordingly, because this proposed rule change would not result in any substantive or textual changes to its rules or its restructured operations, SCCP will continue to offer the same services as it has been since the 1997 rule changes took affect. Specifically, SCCP will continue to offer trade confirmation and recording services to Phlx members effecting transactions through what SCCP refers to as regional interface operations (''RIO'') accounts and ex-clearing accounts. SCCP will not provide clearing guarantees for these transactions. In addition, SCCP will also continue to provide margin accounts for margin members that clear and settle their transactions through SCCP's Omnibus Clearance and Settlement Account at NSCC.[7]

II. Discussion

Section 17A(b)(3)(F) of the Act[8] requires, among other things, that the rules of a clearing agency are designed to promote the prompt and accurate clearance and settlement of securities transactions. The Commission finds that SCCP's proposed rule change is consistent with SCCP's obligations under section 17A(b)(3)(F) of the Act because permanently approving the rules relating to SCCP's restructured business should eliminate any uncertainty about and therefore provide greater confidence in SCCP's long-term ability and commitment to provide prompt and accurate clearance and settlement services to the securities industry. In addition, since the proposed rule change does not alter any of SCCP's rules or structure of its services and in light of SCCP's actual performance since 1997, SCCP should be able to provide for the prompt and accurate clearance and settlement of securities transactions.

III. Conclusion

On the basis of the foregoing, the Commission finds that the proposal is consistent with the requirements of the Act and in particular with the requirements of section 17A of the Act[9] and the rules and regulations thereunder.

It is therefore ordered, pursuant to section 19(b)(2) of the Act, that the proposed rule change (File No. SR–SCCP–2003–04) be, and hereby is, approved.

For the Commission by the Division of Market Regulation, pursuant to delegated authority.[10]

Margaret H. McFarland,

Deputy Secretary.

[FR Doc. 03–31811 Filed 12–24–03; 8:45 am]

BILLING CODE 8010–01–P

[3] This Agreement was executed in connection with Phlx's withdrawal from the securities depository business (offered by its wholly-owned subsidiary, Philadep) and Phlx's restructured and limited clearance and settlement business (offered by its wholly-owned subsidiary, SCCP).

[4] Securities Exchange Act Release No. 39444 (Dec. 11, 1997), 62 FR 66703 (Dec. 19, 1997) [File Nos. SR–TC–97–16, SR–NSCC–97–08, SR–Philadep–97–04, and SR–SCCP–97–04].

[5] At that time, the Commission stated that ''because a part of SCCP's proposed rule change concerns the restructuring of SCCP's operations to enable SCCP to offer limited clearing and settlement services to certain Phlx members, the Commission finds that it is appropriate to grant only temporary approval to the portion of SCCP's proposed rule change that amends SCCP's By-Laws, Rules, or Procedures. This will allow the Commission and SCCP to see how well SCCP's restructured operations are functioning under actual working conditions and to determine whether any adjustments are necessary. Thus, the Commission is approving the portion of SCCP's proposal that amends its By-Laws, Rules and Procedures through Dec. 31, 1998.''

[6] Securities Exchange Act Release Nos. 40872 (Dec. 31, 1998), 64 FR 1264 (Jan. 8, 1999) [File No. SR–SCCP–98–05]; 42320 (Jan. 6, 2000), 65 FR 2218 (Jan. 13, 2000) [File No. SR–SCCP–99–04]; 43781 (Dec. 28, 2000), 66 FR 1167 (Jan. 5, 2001) [File No. SR–SCCP–00–05]; 45227 (Jan. 3, 2002), 67 FR 1259 (Jan. 9, 2002) [File No. SR–SCCP–2001–11]; and 47016 (Dec. 17, 2000), 67 FR 78556 (Dec. 24, 2002) [File No. SR–SCCP–2001–12].

[7] For a detailed discussion of the clearance and settlement services SCCP will continue to provide, refer to the notice, *supra* note 2.

[8] 15 U.S.C. 78q–1(b)(3)(F).

[9] 15 U.S.C. 78q–1.

[10] 17 CFR 200.30–3(a)(12).

DEPARTMENT OF STATE

[Public Notice 4575]

Bureau of Educational and Cultural Affairs Request for Grant Proposals: Middle East Partnership Initiative (MEPI) U.S. Business Internship Program for Young Middle Eastern Women

SUMMARY: The Office of Academic Exchange Programs of the Bureau of Educational and Cultural Affairs announces an open competition for Middle East Partnership Initiative (MEPI) U.S. Business Internship Program for Young Middle Eastern Women. Public and private non-profit organizations meeting the provisions described in Internal Revenue Code section 26 U.S.C. 501(c)(3) may submit proposals to administer the participant preparation and support component of the Middle East Partnership Initiative (MEPI) U.S. Business Internship Program for Young Middle Eastern Women for participants from Algeria, Bahrain, Egypt, Iraq (excluding Iraqi expatriates), Israel (limited to the Israeli Arab sector), Jordan, Kuwait, Lebanon, Morocco, Oman, Qatar, Saudi Arabia, Syria, Tunisia, United Arab Emirates, West Bank/Gaza and Yemen. ECA anticipates supporting 40 participants with $1,580,000 in funding through MEPI. Participants will be placed in three- or six-month management internships or three-month entry-level internships, depending on professional experience.

Important Note: This Request for Grant Proposals contains language in the ''Shipment and Deadline for Proposals'' section that is significantly different from that used in the past. Please pay special attention to procedural changes as outlined.

Program Information

Overview

Subject to the availability of funds, the Bureau of Educational and Cultural Affairs (ECA) requests proposals for the administration of the participant preparation and support component of the Middle East Partnership Initiative (MEPI) U.S. Business Internship Program for Young Middle Eastern Women for participants from Algeria, Bahrain, Egypt, Iraq (excluding Iraqi expatriates), Israel (limited to the Israeli Arab sector), Jordan, Kuwait, Lebanon, Morocco, Oman, Qatar, Saudi Arabia, Syria, Tunisia, United Arab Emirates, West Bank/Gaza and Yemen. ECA anticipates supporting 40 participants with $1,580,000 in funding through MEPI. Participants will be placed in three- or six-month management

internships or three-month entry-level internships, depending on professional experience.

Applicant organizations must demonstrate the ability to effectively administer the participant preparation and support component of the U.S. Business Internship Program for Young Middle Eastern Women. Participant preparation and support responsibilities in four (4) administrative categories are listed below. It should be understood that in the implementation of all of these responsibilities, the Bureau must be consulted, especially in the resolution of any and all problems that may arise. The administrative portion of the grant should be kept to a minimum, and the Bureau encourages applicants to provide maximum levels of cost sharing and funding from private sources in support of this project.

1. U.S. Orientations and Academic Preparation Programs

The proposal should include a plan for two separate four-week orientation and academic preparation programs prior to the internship placements in order to assist participants with the transition to the United States, its culture, and the business environment. The first three days of the program should be conducted jointly for both groups in Washington, DC. Following this introduction, the remainder of the orientation and preparation program should be conducted in two cohorts and reflect the professional level of the participants (entry level and management interns) at a location, possibly a university campus, in the U.S. Each orientation and academic preparation program should have a maximum of 20 participants. The orientation and academic preparation program should follow an interdisciplinary approach that addresses both the opportunities and challenges of interning in a U.S. business. The program should aim to provide participants with the skills to function successfully in the United States culturally and professionally, and to inspire professional achievement. The academic portion of the program should be modeled on an MBA executive education program and could include coursework in management, finance, accounting, business strategy, marketing, organizational behavior, information technology, governance and ethics. The orientation portion of the program should include workshops on cross-cultural adaptation, U.S. history and society, the development of the business sector, women in business and leadership development.

Applicant organizations are encouraged to partner with qualified U.S. institutions that are experienced in delivering customized MBA-level training to international students. It is also highly desirable that the program participants receive a certificate of achievement from an accredited institution upon the successful completion of the academic preparation program.

2. End-of-Program Washington Workshop

The proposal should include a plan for two four-day workshops in Washington, DC. One workshop should take place at the conclusion of the three-month entry-level internship period for these interns and one should take place at the conclusion of the six-month management internship period for this group. The goals of both workshops are to provide a forum for reflection on the overall experience in the U.S., the creation of an alumnae network and the development of leadership skills. Workshop sessions should include, but not be limited to, career development, opportunities for alumni leadership, and program evaluation. Upon completion of the workshop, participants should immediately return to their countries.

3. Internship Placement Support

Internships in U.S. companies will be identified and prepared by the Bureau of Near Eastern Affairs and the Bureau of Educational and Cultural Affairs of the U.S. Department of State, in consultation with the Department of Commerce. The Department of State is working to identify internship spots for up to 40 women in both Fortune 500 companies as well as small and medium size enterprises in a variety of industries. Additionally, the Department of State is working to identify companies in the same metropolitan areas so interns will be co-located in the same cities. Businesses may accept more than one intern, but the interns should not be managed or supervised by the same person. The U.S. business will be responsible for providing professional development and management experience; a workplace orientation that includes meeting supervisors, assigning mentors, and reviewing the work outline; and assisting with the identification and arrangement of housing (prior to the intern's arrival).

Applicant organizations will be responsible for coordination with the U.S. Department of State and the participating U.S. businesses to ensure a smooth transition to the internship component of the program. Coordination includes making participant travel arrangements, ensuring that appropriate housing is available during the internship period and preparing the participants for living independently in a U.S. city. Additionally, the applicant organization should be prepared to assist in identifying additional internship placements in the event a business withdraws its offer of an internship after the participants arrive in the U.S.

4. Participant Monitoring and Support

The proposal should include a plan for monitoring and support of program participants during the U.S. portion of the program, including travel, housing and living stipend, and program evaluation. Proposals must discuss how the participants' progress in achieving program goals and objectives will be monitored. Proposals should cite the intended frequency and form of communication with the participants during the orientation and academic preparation program and during the subsequent internship period. The use of email lists and a program Web site should be utilized where possible and cost-efficient. The proposal should outline performance goals or benchmarks. Grantee organizations should define their policies for working with fellows who do not meet the academic standards of the academic portion of the program or violate program regulations.

Applicant organizations should propose qualified professional staff, able to efficiently carry out all aspects of the program in the United States. Applicant organizations must demonstrate institutional records of successful exchange programs, including responsible fiscal management and full compliance with all reporting requirements. Applicant organizations will be expected to maintain procedures and manuals for all components of the program to ensure that all staff operates the program according to an established protocol.

Applicant organizations should ensure that the Department of State, through the Bureau of Educational and Cultural Affairs and the Middle East Partnership Initiative, is acknowledged as the program sponsor in all publicity materials and advertising. Applicant organizations should calculate their budgets on an anticipated caseload of 40 principal candidates. Note that all program materials must emphasize that participants will not be able to extend or transfer their U.S. visa sponsorship at the completion of their MEPI-sponsored internship, as they are expected to

return to their home countries to fulfill the two-year home residency requirement of the J visa.

Additionally, the Bureau requests that the applicant organization discuss how it plans to cooperate with the overseas recruitment partner to:

(a) Establish and maintain participant statistical database.

(b) Open, maintain and close intern files. Retain records of grants and other pertinent documentation.

(c) Conduct a technical review of applications for eligibility and thoroughness: checking for accurate bio-data, transcripts, recommendations, TOEFL scores and follow-up, if necessary, to secure missing documentation.

Guidelines: Program administration activities should cover the time frame from August 1, 2004 to March 5, 2005. The expected grantee caseload for the summer 2004 to spring 2005 time fame is projected to be 40 individuals. The Bureau's Office of Academic Exchange Programs will administer and coordinate the Middle East Partnership Initiative (MEPI) U.S. Business Internship Program for Young Middle Eastern Women. Subject to the availability of funds, the Bureau expects to award one grant of up to $1,580,000.

The Middle East Partnership Initiative (MEPI) is a Presidential initiative to support economic, political, and educational reform efforts in the Middle East and champion opportunity for all people of the region, especially women and youth. The initiative strives to link Middle Eastern, U.S., and global private sector businesses, non-governmental organizations, civil society elements, and governments together to develop innovative policies and programs to achieve this mission.

The U.S. Business Internship Program will provide young women from the Middle East unique opportunities to learn management and business skills while working in the dynamic and productive U.S. business environment. This MEPI program will establish substantive internships for skilled, qualified Middle Eastern businesswomen in cooperating U.S. businesses and create a cadre of professionals infused with an experience that only hands-on training can provide. Immersion in the American business environment will give these future business leaders unique tools and skills to bring home and incorporate into regional enterprises while creating mutually beneficial professional and personal relationships between Middle Eastern and American partners.

Participant recruitment and alumni support will be administered through a separate grant agreement. Recruitment efforts will specifically target young Middle Eastern women outside of the traditional urban areas in economically diverse and disadvantaged sectors. A review panel in Washington DC, including representatives of ECA and MEPI, will make the final selection of participants.

Competition for the MEPI U.S. Business Internship Program for Young Middle Eastern Women will be open, merit-based, and fair to all applicants. Applicants will be evaluated based on academic excellence, leadership potential, proficiency in written and spoken English (with a minimum TOEFL score of 550), maturity, and flexibility and suitability to operate successfully in an American corporate environment. Selected applicants must also demonstrate a sufficient level of information technology knowledge and word processing ability to operate in a U.S. business at the appropriate entry or management level.

In-country interview panels will be comprised of representatives from the Public Affairs section of U.S. embassies, embassy Economic/Commercial sections, locally qualified businessmen/women, NGO officials, and alumni of USG exchange programs.

All program participants must be sponsored under Exchange Visitor Program No. G–1–0332 on a J–1 Visa and comply with J–1 Visa regulations. In addition, administration of the program must comply with reporting and withholding regulations for federal, state, and local taxes as applicable.

Programs must comply with J–1 visa regulations. Please refer to Solicitation Package for further information.

Budget Guidelines: The Bureau anticipates awarding one grant in the amount of $1,580,000 to support program and administrative costs required to implement this phase of the U.S. Business Internship Program for Young Middle Eastern Women. Bureau grant guidelines require that organizations with less than four years experience in conducting international exchanges be limited to $60,000 in Bureau funding. Therefore, organizations with less than four years experience in conducting international exchanges are ineligible to apply under this competition. The Bureau encourages applicants to provide maximum levels of cost-sharing and funding from private sources in support of its programs.

Applicants must submit a comprehensive budget for the entire program. Awards may not exceed $1,580,000. There must be a summary budget as well as breakdowns reflecting both administrative and program budgets. Applicants may provide separate sub-budgets for each program component, phase, location, or activity to provide clarification. Allowable costs for the program include the following:

Program Costs

- Domestic travel, coach class or equivalent, from Washington, DC to the orientation site and from the orientation site to the internship location, and from the internship location to Washington, DC;
- Washington Orientation Workshop expenses (not to exceed $800 per participant);
- Tuition, fees (including all staffing and professional fees), room and board for orientation and academic preparation program;
- Educational materials (not to exceed $1,000 per participant);
- Cultural allowance (not to exceed $500 per participant);
- Monthly stipend (please develop an average based on current MMR rates);
- End of Program Workshop expenses (not to exceed $1000 per participant, per workshop);
- Accident and sickness insurance;
- Withholding for taxes as necessary.

Domestic Administrative Costs

- Staff salaries and fringe benefits (Each staff member and his/her position must be listed separately, including the percentage of his/her total time spent on this program and duties performed on behalf of the program. Proposed salaries and time on task must be certified as true and accurate representations of actual costs and percentage of time. Resumes must be included for new staff.);
- Staff travel and per diem;
- Communication costs (fax, telephone, postage, equipment, etc.);
- Administration of tax withholding and reporting as required by Federal, State, and local authorities and in accordance with relevant tax treaties;
- A–133 Audit fees if not included in the indirect cost pool;
- Other direct costs;
- Indirect costs (per OMB Circular A–122, Cost Principles for Non-Profit Organizations, organizations receiving more than $10 million in Federal funding of direct costs in a fiscal year must break out the indirect cost component into two broad categories, Facilities and Administration, as defined in subparagraph C.3).

The above cost allocations are subject to the availability of funds. ECA reserves the right to modify any of the above cost allocations to achieve program efficiency and cost savings.

Please refer to the Solicitation Package for complete budget guidelines and formatting instructions.

Announcement Title and Number: All correspondence with the Bureau concerning this RFGP should reference the above title and number ECA/A/E–04–02 MEPI.

FOR FURTHER INFORMATION CONTACT: The Office of Academic Exchange Programs, ECA/A/E, Room 234, U.S. Department of State, SA–44, 301 4th Street, SW., Washington, DC 20547, 202–619–4360 (phone), 202–401–5914 (fax), *http://exchanges.state.gov/education/fulbright/* to request a Solicitation Package. The Solicitation Package contains detailed award criteria, required application forms, specific budget instructions, and standard guidelines for proposal preparation. Please specify Bureau Senior Program Officer Robert Greenan on all other inquiries and correspondence.

Please read the complete **Federal Register** announcement before sending inquiries or submitting proposals. Once the RFGP deadline has passed, Bureau staff may not discuss this competition with applicants until the proposal review process has been completed.

To Download a Solicitation Package Via Internet: The entire Solicitation Package may be downloaded from the Bureau's Web site at *http://exchanges.state.gov/education/RFGPs.* Please read all information before downloading.

New OMB Requirement: An OMB policy directive published in the **Federal Register** on Friday, June 27, 2003, requires that all organizations applying for Federal grants or cooperative agreements must provide a Dun and Bradstreet (D&B) Data Universal Numbering System (DUNS) number when applying for all Federal grants or cooperative agreements on or after October 1, 2003. The complete OMB policy directive can be referenced at *http://www.whitehouse.gov/omb/fedreg/062703_grant_identifier.pdf.* Please also visit the ECA Web site at *http://exchanges.state.gov/education/rfgps/menu.htm* for additional information on how to comply with this new directive.

Shipment and Deadline for Proposals:

Important Note: The deadline for this competition is February 17, 2003. In light of recent events and heightened security measures, proposal submissions must be sent via a nationally recognized overnight delivery service (*i.e.*, DHL, Federal Express, UPS, Airborne Express, or U.S. Postal Service Express Overnight Mail, etc.) and be shipped no later than the above deadline. The delivery services used by applicants must have in-place, centralized shipping identification and tracking systems that may be accessed via the Internet and delivery people who are identifiable by commonly recognized uniforms and delivery vehicles. Proposals shipped on or before the above deadline but received at ECA more than seven days after the deadline will be ineligible for further consideration under this competition. Proposals shipped after the established deadlines are ineligible for consideration under this competition. It is each applicant's responsibility to ensure that each package is marked with a legible tracking number and to monitor/confirm delivery to ECA via the Internet. Delivery of proposal packages *may not* be made via local courier service or in person for this competition. Faxed documents will not be accepted at any time. Only proposals submitted as stated above will be considered.

Applicants must follow all instructions in the Solicitation Package. The original and 7 copies of the application should be sent to: U.S. Department of State, SA–44, Bureau of Educational and Cultural Affairs, Ref.: ECA/A/E–04–02 MEPI, Program Management, ECA/EX/PM, Room 534, 301 4th Street, SW., Washington, DC 20547. Applicants must also submit the ''Executive Summary'' and ''Proposal Narrative'' sections of the proposal in text (.txt) format on a PC-formatted disk. The Bureau will provide these files electronically to the Public Affairs Section at the U.S. embassy for its review.

Diversity, Freedom and Democracy Guidelines

Pursuant to the Bureau's authorizing legislation, programs must maintain a non-political character and should be balanced and representative of the diversity of American political, social, and cultural life. ''Diversity'' should be interpreted in the broadest sense and encompass differences including, but not limited to ethnicity, race, gender, religion, geographic location, socio-economic status, and physical challenges. Applicants are strongly encouraged to adhere to the advancement of this principle both in program administration and in program content. Please refer to the review criteria under the ''Support for Diversity'' section for specific suggestions on incorporating diversity into the total proposal. Public Law 104–319 provides that ''in carrying out programs of educational and cultural exchange in countries whose people do not fully enjoy freedom and democracy,'' the Bureau ''shall take appropriate steps to provide opportunities for participation in such programs to human rights and democracy leaders of such countries.'' Public Law 106–113 requires that the governments of the countries described above do not have inappropriate influence in the selection process. Proposals should reflect advancement of these goals in their program contents, to the full extent deemed feasible.

Adherence to All Regulations Governing the J Visa

The Bureau of Educational and Cultural Affairs is placing renewed emphasis on the secure and proper administration of Exchange Visitor (J visa) Programs and adherence by grantees and sponsors to all regulations governing the J visa. Therefore, proposals should demonstrate the applicant's capacity to meet all requirements governing the administration of Exchange Visitor Programs as set forth in 22 CFR part 62, including the oversight of Responsible Officers and Alternate Responsible Officers, screening and selection of program participants, provision of pre-arrival information and orientation to participants, monitoring of participants, proper maintenance and security of forms, record-keeping, reporting and other requirements.

The Grantee will be responsible for issuing DS–2019 forms to participants in this program. A copy of the complete regulations governing the administration of Exchange Visitor (J) programs is available at *http://exchanges.state.gov* or from: United States Department of State, Office of Exchange Coordination and Designation, ECA/EC/ECD–SA–44, Room 734, 301 4th Street, SW., Washington, DC 20547, Telephone: (202) 401–9810, FAX: (202) 401–9809.

Review Process

The Bureau will acknowledge receipt of all proposals and will review them for technical eligibility. Proposals will be deemed ineligible if they do not fully adhere to the guidelines stated herein and in the Solicitation Package. All eligible proposals will be reviewed by the program office, as well as the Public Diplomacy section overseas, where appropriate. Eligible proposals will be subject to compliance with Federal and Bureau regulations and guidelines and forwarded to Bureau grant panels for advisory review. Proposals may also be reviewed by the Office of the Legal Adviser or by other Department elements. Final funding decisions are at the discretion of the Department of State's Assistant Secretary for Educational and Cultural Affairs. Final technical authority for assistance awards and grants resides with the Bureau's Grants Officer.

Review Criteria

Technically eligible applications will be competitively reviewed according to the criteria stated below. These criteria are not rank ordered and all carry equal weight in the proposal evaluation:

1. *Quality of the program idea:* Proposals should exhibit originality, substance, precision, and relevance to the mission of the Bureau and the Middle East Partnership Initiative.

2. *Program planning:* Detailed agenda and relevant work plan should demonstrate substantive undertakings and logistical capacity. Agenda and plan should adhere to the program overview and guidelines described above.

3. *Ability to achieve program objectives:* Objectives should be reasonable, feasible, and flexible. Proposals should clearly demonstrate how the institution will meet the program's objectives and plan.

4. *Multiplier effect/impact:* Proposed programs should strengthen long-term mutual understanding, including maximum sharing of information and establishment of long-term institutional and individual linkages.

5. *Support of Diversity:* Proposals should demonstrate substantive support of the Bureau's policy on diversity. Achievable and relevant features should be cited in both program administration (selection of participants, program venue and program evaluation) and program content (orientation and wrap-up sessions, program meetings, resource materials and follow-up activities).

6. *Institutional Capacity:* Proposed personnel and institutional resources should be adequate and appropriate to achieve the program or project's goals.

7. *Institution's Record/Ability:* Proposals should demonstrate an institutional record of successful exchange programs, including responsible fiscal management and full compliance with all reporting requirements for past Bureau grants as determined by Bureau Grant Staff. The Bureau will consider the past performance of prior recipients and the demonstrated potential of new applicants.

8. *Project Evaluation:* Proposals should include a plan to evaluate the activity's success, both as the activities unfold and at the end of the program. A draft survey questionnaire or other technique plus description of a methodology to use to link outcomes to original project objectives are recommended. Successful applicants will be expected to submit intermediate reports after each project component is concluded or quarterly, whichever is less frequent.

9. *Cost-effectiveness:* The overhead and administrative components of the proposal, including salaries and honoraria, should be kept as low as possible. All other items should be necessary and appropriate.

10. *Cost-sharing:* Proposals should maximize cost-sharing through other private sector support as well as institutional direct funding contributions.

11. *Value to U.S.-Partner Country Relations:* Proposed projects should receive positive assessments by the U.S. Department of State's geographic area desk and overseas officers of program need, potential impact, and significance in the partner country(ies).

Authority

Overall grant making authority for this program is contained in the Mutual Educational and Cultural Exchange Act of 1961, Public Law 87–256, as amended, also known as the Fulbright-Hays Act. The purpose of the Act is ''to enable the Government of the United States to increase mutual understanding between the people of the United States and the people of other countries * * * to strengthen the ties which unite us with other nations by demonstrating the educational and cultural interests, developments, and achievements of the people of the United States and other nations * * * and thus to assist in the development of friendly, sympathetic and peaceful relations between the United States and the other countries of the world.'' The funding authority for the program above is provided through legislation. The funding for this program is provided through the Middle East Partnership Initiative (MEPI).

Notice

The terms and conditions published in this RFGP are binding and may not be modified by any Bureau representative. Explanatory information provided by the Bureau that contradicts published language will not be binding. Issuance of the RFGP does not constitute an award commitment on the part of the Government. The Bureau reserves the right to reduce, revise, or increase proposal budgets in accordance with the needs of the program and the availability of funds. Awards made will be subject to periodic reporting and evaluation requirements.

Notification

Final awards cannot be made until funds have been appropriated by Congress, allocated and committed through internal Bureau procedures.

Dated: December 19, 2003.

C. Miller Crouch,

Principal Deputy Assistant Secretary, Bureau of Educational and Cultural Affairs, Department of State.

[FR Doc. 03–31882 Filed 12–24–03; 8:45 am]

BILLING CODE 4710–05–P

DEPARTMENT OF STATE

Office of the Deputy Secretary of State

[Delegation of Authority 267–1]

Exceptions from Port-of-Entry Special Registration, Fingerprinting and Photographing (Class A Referrals)

By virtue of the authority vested in me by Delegation of Authority 245, and in accordance with 8 CFR 264.1(f), I hereby delegate to Richard H. Jones the authority to determine that special registration, fingerprinting and photographing requirements shall not apply to an individual nonimmigrant alien upon arrival in the United States. Such a determination may be made only for an individual nonimmigrant alien when Mr. Jones determines in writing that an exception from such requirements for such individual is in the national interest and will not compromise national security interests. Mr. Jones may exercise the delegated authority only during the period of his detail to the Coalition Provisional Authority in Iraq and only in his capacity as a State Department employee operating under the direction and supervision of the Secretary of State.

Notwithstanding any provision of this Delegation of Authority, the Secretary of State, the Deputy Secretary of State, the Under Secretary of State for Management, and the Assistant Secretary of State for Consular Affairs may at any time exercise any authority delegated by this delegation of authority.

Mr. Jones may not redelegate the authority delegated by this delegation.

The statutes, regulations, and procedures referenced in this delegation shall be deemed to be such statutes, regulations or procedures as amended from time to time.

This delegation is in addition to Delegations of Authority 253 and 254 regarding Exceptions from Port-of-Entry Special Registration, Fingerprinting and Photographing. This delegation supersedes Delegation of Authority 267.

This delegation shall be published in the **Federal Register**.

Dated: November 28, 2003.

Richard L. Armitage,

Deputy Secretary of State, Department of State.

[FR Doc. 03–31881 Filed 12–24–03; 8:45 am]

BILLING CODE 4710–10–P

DEPARTMENT OF STATE

[Delegation of Authority No. 267]

Special Exemptions From Port-of-Entry Special Registration, Fingerprinting and Photographing by Patrick J. Kennedy (National Interest)

By virtue of the authority vested in me as Secretary of State, including the authority of Section 1 of the State Department Basic Authorities Act of 1956 (22 U.S.C. 2651a), as amended, and the authority conferred on me by 8 CFR 264.1 (f), I hereby delegate the following functions as indicated.

Section 1. Functions Delegated to Patrick J. Kennedy

The functions vested in me as the Secretary of State by 8 CFR 264.1(f)(1) to determine that special registration, fingerprinting and photographing requirements shall not apply to an individual nonimmigrant alien upon arrival in the United States are delegated to Patrick J. Kennedy. Such a determination may be made only for an individual nonimmigrant alien when Mr. Kennedy determines in writing that an exception from such requirements for such individual is in the national interest and will not compromise national security interests. Mr. Kennedy may exercise the delegated functions only in his capacity as a State Department employee operating under the direction and supervision of the Secretary of State.

Section 2. Technical Provisions

a. Notwithstanding any provision of this Delegation of Authority, the Secretary of State, the Deputy Secretary of State and the Under Secretary of State for Management may at any time exercise any function delegated by this delegation of authority.

b. The functions delegated by this memorandum of authority may not be redelegated.

c. The statutes, regulations, and procedures referenced in this delegation shall be deemed to be such statutes, regulations or procedures as amended from time to time.

d. This delegation is in addition to delegations Nos. 253 and 254 regarding Exceptions from Port-of-Entry special Registration, Fingerprinting and Photographing.

This delegation and related delegations referenced herein shall be published in the **Federal Register**.

Dated: September 9, 2003.

Colin L. Powell,

Secretary of State, Department of State.

[FR Doc. 03–31880 Filed 12–24–03; 8:45 am]

BILLING CODE 4710–10–P

DEPARTMENT OF TRANSPORTATION

Office of the Secretary

Aviation Proceedings, Agreements Filed the Week Ending December 12, 2003

The following Agreements were filed with the Department of Transportation under the provisions of 49 U.S.C. 412 and 414. Answers may be filed within 21 days after the filing of the application.

Docket Number: OST–2003–16671.

Date Filed: December 9, 2003.

Parties: Members of the International Air Transport Association.

Subject: PTC23 EUR–SASC 0115 dated December 5, 2003, TC23 Europe-South Asian Subcontinent Expedited Resolutions 002ae, 002cd, 070h r1–r3, Intended effective date January 15, 2004.

Docket Number: OST–2003–16708.

Date Filed: December 11, 2003.

Parties: Members of the International Air Transport Association.

Subject: Mail Vote 345, PTC COMP 1111 dated December 12, 2003, PTC1/2/3/12/23/31/123, General Increase Resolution 002mm (amending) (except within Europe, between USA/US Territories and Austria, Chile, Czech Republic, Finland, France (including French Guiana, French Polynesia, Guadeloupe, Martinique, New Caledonia, Reunion, Saint Pierre and Miquelon), Germany, Iceland, Italy, Korea (Rep. of), Malaysia, Netherlands, New Zealand, Panama, Scandinavia, Switzerland), Intended effective date: January 1, 2004.

Andrea M. Jenkins,

Program Manager, Docket Operations, Federal Register Liaison.

[FR Doc. 03–31886 Filed 12–24–03; 8:45 am]

BILLING CODE 4910–62–P

DEPARTMENT OF TRANSPORTATION

Office of the Secretary

Notice of Applications for Certificates of Public Convenience and Necessity and Foreign Air Carrier Permits Filed Under Subpart B (Formerly Subpart Q) During the Week Ending December 12, 2003

The following Applications for Certificates of Public Convenience and Necessity and Foreign Air Carrier Permits were filed under subpart B (formerly subpart Q) of the Department of Transportation's Procedural Regulations (See 14 CFR 301.201 *et seq.*). The due date for Answers, Conforming Applications, or Motions to Modify Scope are set forth below for each application. Following the Answer period DOT may process the application by expedited procedures. Such procedures may consist of the adoption of a show-cause order, a tentative order, or in appropriate cases a final order without further proceedings.

Docket Number: OST–2003–16677.

Date Filed: December 9, 2003.

Due Date for Answers, Conforming Applications, or Motion to Modify Scope: December 30, 2003.

Description: Application of Flight One Airline USA, pursuant to 49 U.S.C. 41102 and subpart B, requesting a certificate of public convenience and necessity authorizing foreign scheduled air transportation of persons, property, and mail.

Docket Number: OST–2003–16716.

Date Filed: December 12, 2003.

Due Date for Answers, Conforming Applications, or Motion to Modify Scope: January 2, 2004.

Description: Application of Blackstar Airlines Corporation, pursuant 49 U.S.C. 41102 and subpart B, requesting a certificate of public convenience and necessity to engage in foreign scheduled air transportation of persons, property and mail.

Docket Number: OST–2003–16717.

Date Filed: December 12, 2003.

Due Date for Answers, Conforming Applications, or Motion to Modify Scope: January 2, 2004.

Description: Application of Blackstar Airlines Corporation, pursuant to 49 U.S.C. 41102 and subpart B, requesting a certificate of public convenience and necessity to engage in interstate scheduled air transportation of persons, property, and mail.

Andrea M. Jenkins,

Program Manager, Docket Operations, Federal Register Liaison.

[FR Doc. 03–31885 Filed 12–24–03; 8:45 am]

BILLING CODE 4910–62–P

DEPARTMENT OF TRANSPORTATION

Notice and Request for Comments

AGENCY: Federal Railroad Administration, DOT.

ACTION: Notice and request for comments.

SUMMARY: In compliance with the Paperwork Reduction Act of 1995 (44 U.S.C. 3501 *et seq.*), this notice announces that the Information Collection Requirement (ICR) abstracted below has been forwarded to the Office of Management and Budget (OMB) for review and comment. The ICR describes the nature of the information collection and its expected burden. The **Federal Register** notice with a 60-day comment period soliciting comments on the following collection of information was published on October 20, 2003 (68 FR 59981).

DATES: Comments must be submitted on or before January 28, 2004.

FOR FURTHER INFORMATION CONTACT: Mr. Robert Brogan, Office of Safety, Planning and Evaluation Division, RRS–21, Federal Railroad Administration, 1120 Vermont Ave., NW., Mail Stop 25, Washington, DC 20590 (telephone: (202) 493–6292), or Ms. Debra Steward, Office of Information Technology and Productivity Improvement, RAD–20, Federal Railroad Administration, 1120 Vermont Ave., NW., Mail Stop 35, Washington, DC 20590 (telephone: (202) 493–6139). (These telephone numbers are not toll-free.)

SUPPLEMENTARY INFORMATION:

The Paperwork Reduction Act of 1995 (PRA), Pub. L. No. 104–13, Section 2, 109 Stat. 163 (1995) (codified as revised at 44 U.S.C. 3501–3520), and its implementing regulations, 5 CFR Part 1320, require Federal agencies to issue two notices seeking public comment on information collection activities before OMB may approve paperwork packages. 44 U.S.C. 3506, 3507; 5 CFR 1320.5, 1320.8(d)(1), 1320.12. On October 20, 2003, FRA published a 60-day notice in the **Federal Register** soliciting comment on ICRs that the agency was seeking OMB approval. 68 FR 59981.

FRA received two comments after issuing this notice. The first comment or letter that FRA received was from the Brotherhood of Maintenance of Way Employees (BMWE). The BMWE supports the proposed study and remarked:

Those employees categorized as ''construction/production'' generally are assigned work over vast territories encompassing an entire railroad system, and report to an ever changing designated lodging facility or rally point at the beginning of each work week or ''compressed half'' work period (a compressed half may consist of 8 consecutive 10 hour days, followed by 7 consecutive days off or some similar variation) * * * It is not uncommon for MW production/construction crew members to travel 500–1,500 miles from home to reach the designated lodging facility at the beginning of the work period. These employees often work 10 or more hours per day for 8–10 days straight, and then drive back home at the end of the work period * * *

For all MW workers, there are no FRA imposed limits on the number of hours worked. MW work is physically taxing and is conducted under extreme weather conditions, including the heat of summer, the cold of winter, and in rain, snow, and other inclement conditions. MW employees working construction/production are also susceptible to the stresses of long periods of separation from their families, and are also subject to call outside scheduled work hours.

Fatigue has been a huge factor in our industry and recent railroad mergers have resulted in greatly expanded territories for MW production/construction crews. Extensive travel, shared away-from-home lodging, and constantly changing work hours and locations have become the norm for MW employees. The fatigue associated with MW work continues to get worse and has been a contributing factor, if not the sole cause, in numerous accidents and incidents in the rail industry.

The BMWE contends that the Work Schedules and Sleep Patterns of Maintenance of Way Employees study will help FRA and the rail industry develop an understanding of the work schedule-related fatigue issues that affect MW employees. Once this study is complete, the BMWE will continue to work with the FRA and the rail industry to reduce the fatigue level of MW employees.

The second comment or letter that FRA received came from the Brotherhood of Railroad Signalmen (BRS). The BRS also supports the proposed study and stated:

Fatigue has been a huge factor in our industry. Maintenance of way territories have been expanded. Outside of large metropolitan areas, it is not uncommon for maintenance of way employees to have to travel anywhere from 500–1,500 miles. The BRS contends that the erratic call schedule of maintenance of way employees along with no limitations on the amount of hours that they can work produce an environment where fatigue is the norm. It is a way of life for maintenance of way employees. It continues to get worse * * *

The BRS contends that the Work Schedules and Sleep Patterns of Maintenance of Way Employees study will help FRA and the rail industry to develop an understanding of the work-schedule-related fatigue issues that affect MW employees. Once this study is complete, the BRS will continue to work with the FRA and the rail industry in order to promote work schedules and initiatives that will reduce the fatigue level of maintenance of way employees.

Neither BMWE nor BRS addressed the issue of burden hour estimates or burden cost estimates. After carefully reviewing these comments, DOT announces that these information collection activities have been re-evaluated and certified under 5 CFR 1320.5(a) and forwarded to OMB for review and approval pursuant to 5 CFR 1320.12(c).

Before OMB decides whether to approve these proposed collections of information, it must provide 30 days for public comment. 44 U.S.C. 3507(b); 5 CFR 1320.12(d). Federal law requires OMB to approve or disapprove paperwork packages between 30 and 60 days after the 30 day notice is published. 44 U.S.C. 3507 (b)–(c); 5 CFR 1320.12(d); *see also* 60 FR 44978, 44983, Aug. 29, 1995. OMB believes that the 30 day notice informs the regulated community to file relevant comments and affords the agency adequate time to digest public comments before it renders a decision. 60 FR 44983, Aug. 29, 1995. Therefore, respondents should submit their respective comments to OMB within 30 days of publication to best ensure having their full effect. 5 CFR 1320.12(c); *see also* 60 FR 44983, Aug. 29, 1995.

The summaries below describe the nature of the information collection requirements (ICRs) and the expected burden, and are being submitted for clearance by OMB as required by the PRA.

Title: Work Schedules and Sleep Patterns of Maintenance of Way Employees.

OMB Control Number: 2130–NEW.

Type of Request: New collection.

Affected Public: Rail workers.

Abstract: In a continuing effort to improve rail safety and to reduce the number of injuries and fatalities to rail workers, FRA and the rail industry have recently focused on the issue of fatigue among train and engine crew personnel. Because railroading is an around-the-clock, seven-days-a-week operation and because a wide array of workers are needed to both operate and to maintain the nation's railroads, other crafts—

besides train and engine crews—can also be subject to fatigue. The non-operating crafts, including locomotive and car repair, track maintenance, signal system maintenance and telecommunications, fall into this second category. FRA is proposing a study which will focus on maintenance of way employees, one of the non-operating railroad crafts. The project will be very similar in both method and scope to a current study focusing on railroad signalmen. To develop an understanding of the work schedule-related fatigue issues for maintenance of way employees, FRA proposes to undertake this study. The proposed study has two primary purposes: (1) It aims to document and characterize the work/rest schedules and sleep patterns of the maintenance of way employees; and (2) it intends to examine the relationship between these schedules and level of alertness/fatigue for the individuals who work these schedules. The intent is to report results in the aggregate, not by railroad. Subjective ratings from participants of their alertness/sleepiness on both work and non-work days will be an integral part of this study. The data will be collected through the use of a daily diary or log, as well as a brief background questionnaire for each participant. Analysis of the diary data will allow FRA to assess whether or not there are any work-related fatigue issues for maintenance of way employees.

Form Number(s): FRA F 6180.113; FRA F 6180.114.

Affected Public: Rail Workers.

Respondent Universe: 338 Maintenance of Way Employees.

Frequency of Submission: On occasion.

Annual Estimated Burden Hours: 874 hours.

Status: Regular Review.

Addressee: Send comments regarding this information collection to the Office of Information and Regulatory Affairs, Office of Management and Budget, 725 Seventeenth Street, NW., Washington, DC 20503, Attention: FRA Desk Officer.

Comments are invited on the following: Whether the proposed collection of information is necessary for the proper performance of the functions of the Department, including whether the information will have practical utility; the accuracy of the Department's estimate of the burden of the proposed information collection; ways to enhance the quality, utility, and clarity of the information to be collected; and ways to minimize the burden of the collection of information on respondents, including the use of automated collection techniques or other forms of information technology.

A comment to OMB is best assured of having its full effect if OMB receives it within 30 days of publication of this notice in the **Federal Register**.

Authority: 44 U.S.C. 3501–3520.

Issued in Washington, DC on December 19, 2003.

Kathy A. Weiner,

Director, Office of Information Technology and Support Systems, Federal Railroad Administration.

[FR Doc. 03–31911 Filed 12–24–03; 8:45 am]

BILLING CODE 4910–06–P

DEPARTMENT OF TRANSPORTATION

Surface Transportation Board

[STB Ex Parte No. 290 (Sub No. 5) (2004–1)]

Quarterly Rail Cost Adjustment Factor

AGENCY: Surface Transportation Board.

ACTION: Approval of rail cost adjustment factor.

SUMMARY: The Board has approved the first quarter 2004 rail cost adjustment factor (RCAF) filed by the Association of American Railroads. The first quarter 2004 RCAF (Unadjusted) is 1.025. The first quarter 2004 RCAF (Adjusted) is 0.517. The first quarter 2004 RCAF–5 is 0.492.

EFFECTIVE DATE: January 1, 2004.

FOR FURTHER INFORMATION CONTACT: Mac Frampton, (202) 565–1541. Federal Information Relay Service (FIRS) for the hearing impaired: 1–800–877–8339.

SUPPLEMENTARY INFORMATION: Additional information is contained in the Board's decision. To purchase a copy of the full decision, write to, call, or pick up in person from: ASAP Document Solutions, Suite 405, 1925 K Street, NW., Washington, DC 20006, telephone (202) 293–7878. [Assistance for the hearing impaired is available through FIRS: 1–800–877–8339.]

This action will not significantly affect either the quality of the human environment or energy conservation.

Pursuant to 5 U.S.C. 605(b), we conclude that our action will not have a significant economic impact on a substantial number of small entities within the meaning of the Regulatory Flexibility Act.

Decided: December 18, 2003.

By the Board, Chairman Nober.

Vernon A. Williams,

Secretary.

[FR Doc. 03–31865 Filed 12–24–03; 8:45 am]

BILLING CODE 4915–00–P

DEPARTMENT OF TRANSPORTATION

Surface Transportation Board

[STB Docket No. AB–863X]

City of Venice—Abandonment Exemption—in Venice, IL, and St. Louis, MO

The City of Venice (City) has filed a notice of exemption under 49 CFR 1152 Subpart F—*Exempt Abandonments* to abandon its entire 2.00-mile line of railroad, between milepost 0.55 near Branch Street Yard in St. Louis, MO, and milepost 0.0 at the state line at Venice, IL, and milepost 0.00 at Venice and milepost 1.45 at McKinley Junction, IL. The line traverses United States Postal Service ZIP Codes 62090 and 63147.

The City has certified that: (1) No local traffic has moved over the line for at least 2 years; (2) there is no overhead traffic on the line; (3) no formal complaint filed by a user of rail service on the line (or by a state or local government entity acting on behalf of such user) regarding cessation of service over the line either is pending with the Surface Transportation Board (Board) or with any U.S. District Court or has been decided in favor of complainant within the 2-year period; and (4) the requirements at 49 CFR 1105.7 (environmental reports), 49 CFR 1105.8 (historic reports), 49 CFR 1105.11 (transmittal letter), 49 CFR 1105.12 (newspaper publication), and 49 CFR 1152.50(d)(1) (notice to governmental agencies) have been met.

Where, as here, the carrier is abandoning its entire line, the Board does not normally impose labor protection under 49 U.S.C. 10502(g), unless the evidence indicates the existence of: (1) A corporate affiliate that will continue substantially similar rail operations; or (2) a corporate parent that will realize substantial financial benefits over and above relief from the burden of deficit operations by its subsidiary railroad. *See Wellsville, Addison & Galeton R. Corp.—Abandonment,* 354 I.C.C. 744 (1978); and *Northampton and Bath R. Co.—Abandonment,* 354 I.C.C. 784 (1978). Because the City does not appear to have a corporate affiliate or parent that could benefit from the proposed abandonment, employee protection conditions will not be imposed.

Provided no formal expression of intent to file an offer of financial assistance (OFA) has been received, this exemption will be effective on January

28, 2004,[1] unless stayed pending reconsideration. Petitions to stay that do not involve environmental issues,[2] formal expressions of intent to file an OFA under 49 CFR 1152.27(c)(2),[3] and trail use/rail banking requests under 49 CFR 1152.29 must be filed by January 8, 2004.[4] Petitions to reopen or requests for public use conditions under 49 CFR 1152.28 must be filed by January 20, 2004, with: Surface Transportation Board, 1925 K Street, NW., Washington, DC 20423–0001.

A copy of any petition filed with the Board should be sent to the City's representative: Charles H. Montange, 426 NW 162d St., Seattle, WA 98177.

If the verified notice contains false or misleading information, the exemption is void *ab initio.*

The City has filed an environmental report which addresses the abandonment's effects, if any, on the environment and historic resources. SEA will issue an environmental assessment (EA) by January 2, 2004. Interested persons may obtain a copy of the EA by writing to SEA (Room 500, Surface Transportation Board, Washington, DC 20423–0001) or by calling SEA, at (202) 565–1539. [Assistance for the hearing impaired is available through the Federal Information Relay Service (FIRS) at 1–800–877–8339.] Comments on environmental and historic preservation matters must be filed within 15 days after the EA becomes available to the public.

Environmental, historic preservation, public use, or trail use/rail banking conditions will be imposed, where appropriate, in a subsequent decision.

Pursuant to the provisions of 49 CFR 1152.29(e)(2), the City shall file a notice of consummation with the Board to signify that it has exercised the authority granted and fully abandoned the line. If consummation has not been effected by the City's filing of a notice of consummation by December 29, 2004, and there are no legal or regulatory barriers to consummation, the authority to abandon will automatically expire.

Board decisions and notices are available on our Web site at *www.stb.dot.gov.*

Decided: December 18, 2003.

By the Board, David M. Konschnik, Director, Office of Proceedings.

Vernon A. Williams,

Secretary.

[FR Doc. 03–31719 Filed 12–24–03; 8:45 am]

BILLING CODE 4915–00–P

[1] In its notice, the City indicated a proposed consummation date of January 12, 2004. Under 49 CFR 1152.50(d)(2), however, the earliest the exemption could become effective is 50 days after the verified notice of exemption was filed. The notice was filed on December 9, 2003. Therefore, the effective date of the exemption can be no earlier than January 28, 2004, and consummation may not take place prior to that date. The City's representative has been notified and has confirmed that consummation will not take place before January 28, 2004.

[2] The Board will grant a stay if an informed decision on environmental issues (whether raised by a party or by the Board's Section of Environmental Analysis (SEA) in its independent investigation) cannot be made before the exemption's effective date. *See Exemption of Out-of-Service Rail Lines,* 5 I.C.C.2d 377 (1989). Any request for a stay should be filed as soon as possible so that the Board may take appropriate action before the exemption's effective date.

[3] Each OFA must be accompanied by the filing fee, which currently is set at $1,100. *See* 49 CFR 1002.2(f)(25).

[4] Madison County Transit (MCT) concurrently filed a request for issuance of a notice of interim trail use for the entire line under the National Trails System Act, 16 U.S.C. 1247(d). Also by letter filed December 12, 2003, the Terminal Railroad Association of St. Louis (Terminal) states that it intends to file a reply to the City's notice of exemption and to MCT's trail use request, and that it will seek a stay of the effective date of the exemption. The Board will address MCT's trail use request, along with any others that may be filed, and any further filings by Terminal in subsequent decisions.

DEPARTMENT OF TREASURY

Internal Revenue Service

Addition of New Transmitter Encryption Options and Pending Discontinuance of Non-Encrypted Options for IRS e-file

AGENCY: Internal Revenue Service (IRS), Treasury.

ACTION: Notice.

SUMMARY: Internal Revenue Service will provide the ability for *IRS e-file* program participants to use approved encryption methods for the 2005 and later filing seasons, beginning with the Acceptance Testing System (ATS) in late 2004. For the 2005 filing season, IRS intends to begin discontinuing support of non-encrypted transmissions whether by dedicated or dial-up links on the Public Switched Telephone Network (PSTN).

DATES: Questions or concerns should be directed to the Internal Revenue Service by January 31, 2004.

SUPPLEMENTARY INFORMATION: This information pertains to *IRS e-filer* transmitters (EROs) who are transmitting both individual and business electronic returns and electronic tax documents to the IRS EMS Front-End Processing Systems and also to state taxing authorities who retrieve state returns from the State Retrieval Systems located in Austin, TX and Memphis, TN.

Background

The Internal Revenue Service is charged with protecting taxpayer information using the most feasible, efficient and appropriate methods of protection available. Encrypting the transmissions between the trading partners and the IRS would enhance and complete the existing security provided by the trading partners' systems and by the IRS security zone.

Dedicated Line Filers

Based on an analysis of various e-file trading partner capabilities, the Internal Revenue Service announces that effective for the 2005 Filing Season, it will require the use of a minimum 128-bit FIPS approved but trading partner-chosen, procured, and installed method of encryption for use on trading partner-provided dedicated line(s) These dedicated lines may continue to be terminated at the Austin and Memphis EMS locations, and will permit use of the existing TELNET and FTP protocol methods. Each dedicated line trading partner will need to submit a new application and will identify the evaluation number referencing the chosen encryption method (*e.g.*, Brand, Model Number, FIPS 140-x, Evaluation Number xxx, and Evaluation Date). For filers using dedicated lines terminating on IRS network equipment, the IRS will provide the IOS implemented 128-bit IPSec 3DES encryption services.

Internet Transmission Filers

Recognizing that the majority of e-commerce and e-government applications are migrating to the Internet and using standard technologies, the Internal Revenue Service will provide the ability for registered users to electronically transmit return information to an IRS-provided and certified ''Secure Web'' site. Use of this Web site for the EMS e-filer program will require the use of Secure Sockets Layer (SSL) Version 3.0 using 128-bit encryption keys in an operational mode using the current modem based file transmission commands within a client commonly termed ''TELNET/S''. A very similar web and SSL technology is also being used for the IRS/FMS EFTPS program, *pay.gov,* the IRS modernized e-file RUP, as well as for other commercial applications, such as on-line banking. Support for SSL is provided at no extra cost in most Operating Systems available for the last five years, and is supported by the majority of Internet Service Providers (ISPs).

Extranet Connectivity

The IRS is capable of supporting a moderate number of Trading Partners who wish to use an encryption technology termed ''IPSec'', with a shared secret key from their facilities, over the Internet to IRS selected ISPs handling IRS EXTRANET termination points. These termination points will contain only IRS equipment. The protocol within this connection would be the same as the current dedicated line filers, but would not guarantee any level of performance. Transmitters wishing to use this method would need to notify the IRS, following procedures outlined in IRS Publication 1346.

Cost Impacts and Taxpayer Burdens

The cost impact of the Internet SSL method to IRS e-filers is expected to be minimal. The transmitters will incur the cost of the ISP, however, many of them already have and use an ISP. Currently the e-filers must pay for the long distance telephone call to the IRS front-end sites, and must make multiple calls if their transmission volume is high. Historic technologies also incur ''dropped'' calls. These occurrences are expected to be reduced when the Internet is used. Calls now would be to the usually local ISP phone number and its alternates.

Implementation Schedule

The Internal Revenue Service will make known to the registered trading partners and software developers the software standards and scripting opportunities on or before March 31, 2004, to allow completion of any software changes in their products. The IRS will attempt to ensure that those standards are generally compliant to those adopted by other IRS e-commerce Internet interfaces. The Internal Revenue Service will make known to the registered trading partners and software developers the URLs for the ''Secure Web'' service model by July 31, 2004. The Internal Revenue Service will make a ''Secure Web'' test facility available to its registered users on or about July 31, 2004, and have a production Assurance Testing (ATS) facility for the ''Secure Web'' method by November 1, 2004.

The Internal Revenue Service encourages all current and prospective e-filers to begin using one or both of the two new encryption methods by November 1, 2004. Dedicated line filers are encouraged to implement encryption at their earliest convenience and at a time that is mutually agreeable to both the trading partner and the Internal Revenue Service, prior to November 1, 2004.

Discontinuance of Existing Dial-Up Analog and Dial-Up ISDN Service

Effective December 1, 2003, the Service is no longer accepting requests for support of IRS dial-up ISDN services. During 2005, the IRS will phase down the number of its existing analog, PSTN dial-up line services and its companion existing ISDN dial-up line services, and will discontinue them on November 30, 2005.

ADDRESSES: Carolyn E. Davis, Senior Program Analyst, IRS, Electronic Tax Administration, OS:CIO:I:ET:S:SP, 5000 Ellin Road, Room C4–187, Lanham, MD 20706.

FOR FURTHER INFORMATION CONTACT: Questions or concerns will also be taken over the telephone. Call Carolyn Davis—202–283–0589 (not a toll-free number). You may e-mail responses entitled *e-file Transmission Encryption* to *efile.transmission.encryption@irs.gov.*

Dated: December 18, 2003.

Jo Ann Bass,

Director Strategic Services Division, Electronic Tax Administration.

[FR Doc. 03–31825 Filed 12–24–03; 8:45 am]

BILLING CODE 4830–01–P

DEPARTMENT OF THE TREASURY

Internal Revenue Service

Open Meeting of the Area 4 Taxpayer Advocacy Panel (Including the States of Illinois, Indiana, Kentucky, Michigan, Ohio, West Virginia, and Wisconsin)

AGENCY: Internal Revenue Service (IRS), Treasury.

ACTION: Notice.

SUMMARY: An open meeting of the Area 4 Taxpayer Advocacy Panel will be conducted (via teleconference). The Taxpayer Advocacy Panel is soliciting public comment, ideas, and suggestions on improving customer service at the Internal Revenue Service.

DATES: The meeting will be held Wednesday, January 21, 2004, at 8 a.m., central time.

FOR FURTHER INFORMATION CONTACT: Mary Ann Delzer at 1–888–912–1227, or (414) 297–1604.

SUPPLEMENTARY INFORMATION: Notice is hereby given pursuant to section 10(a)(2) of the Federal Advisory Committee Act, 5 U.S.C. App. (1988) that an open meeting of the Area 4 Taxpayer Advocacy Panel will be held Wednesday, January 21, 2004, at 8 a.m., central time via a telephone conference call. You can submit written comments to the panel by faxing to (414) 297–1623, or by mail to Taxpayer Advocacy Panel, Stop1006MIL, 310 West Wisconsin Avenue, Milwaukee, WI 53203–2221. Public comments will also be welcome during the meeting. Please contact Mary Ann Delzer at 1–888–912–1227 or (414) 297–1604 for dial-in information.

The agenda will include the following: Various IRS issues.

Dated: December 19, 2003.

Bernard Coston,

Director, Taxpayer Advocacy Panel.

[FR Doc. 03–31826 Filed 12–24–03; 8:45 am]

BILLING CODE 4830–01–P

DEPARTMENT OF THE TREASURY

Internal Revenue Service

Open Meeting of the Taxpayer Advocacy Panel Earned Income Tax Credit Issue Committee

AGENCY: Internal Revenue Service (IRS), Treasury.

ACTION: Notice.

SUMMARY: An open meeting of the Taxpayer Advocacy Panel Earned Income Tax Credit Issue Committee will be conducted (via teleconference). The committee is soliciting public comments, ideas and suggestions on improving the administration of the Earned Income Tax Credit by the IRS.

DATES: The meeting will be held Wednesday, January 21, 2004.

FOR FURTHER INFORMATION CONTACT: Audrey Y. Jenkins at 1–888–912–1227 (toll-free), or 718–488–2085 (non toll-free).

SUPPLEMENTARY INFORMATION: Notice is hereby given pursuant to section 10(a)(2) of the Federal Advisory Committee Act, 5 U.S.C. App. (1988) that an open meeting of the Taxpayer Advocacy Panel Earned Income Tax Credit Issue Committee will be held Wednesday, January 21, 2004, from 2 p.m. to 3 p.m. e.t. via a telephone conference call. The public is invited to make oral comments. Individual comments will be limited to 5 minutes. If you would like to have the TAP consider a written statement, please call 1–888–912–1227 or 718–488–2085, or write Audrey Y. Jenkins, TAP Office, 10 MetroTech Center, 625 Fulton Street, Brooklyn, NY 11201. Due to limited conference lines, notification of intent to participate in the telephone conference call meeting must be made with Audrey Y. Jenkins.

The agenda will include various Earned Income Tax Credit issues.

Dated: December 19, 2003.

Bernard Coston,

Director, Taxpayer Advocacy Panel.

[FR Doc. 03–31827 Filed 12–24–03; 8:45 am]

BILLING CODE 4830–01–P

DEPARTMENT OF THE TREASURY

Internal Revenue Service

Open Meeting of the Area 1 Taxpayer Advocacy Panel (Including the States of New York, Connecticut, Massachusetts, Rhode Island, New Hampshire, Vermont and Maine)

AGENCY: Internal Revenue Service (IRS), Treasury.

ACTION: Notice.

SUMMARY: An open meeting of the Area 1 Taxpayer Advocacy Panel will be conducted (via teleconference). The Taxpayer Advocacy Panel is soliciting public comments, ideas and suggestions on improving customer service at the Internal Revenue Service.

DATES: The meeting will be held Tuesday, January 20, 2004.

FOR FURTHER INFORMATION CONTACT: Marisa Knispel at 1–888–912–1227 (toll-free), or 718–488–3557 (non toll-free).

SUPPLEMENTARY INFORMATION: Notice is hereby given pursuant to section 10(a)(2) of the Federal Advisory Committee Act, 5 U.S.C. App. (1988) that an open meeting of the Area 1 Taxpayer Advocacy Panel will be held Tuesday, January 20, 2004, from 11 a.m. to 12 p.m. e.s.t. via a telephone conference call. Individual comments will be limited to 5 minutes. If you would like to have the TAP consider a written statement, please call 1–888–912–1227 or 718–488–3557, or write Marisa Knispel, TAP Office, 10 MetroTech Center, 625 Fulton Street, Brooklyn, NY 11201. Due to limited conference lines, notification of intent to participate in the telephone conference call meeting must be made with Marisa Knispel.

The agenda will include the following: Various IRS issues.

Dated: December 19, 2003.

Bernard Coston,

Director, Taxpayer Advocacy Panel.

[FR Doc. 03–31828 Filed 12–24–03; 8:45 am]

BILLING CODE 4830–01–P

DEPARTMENT OF THE TREASURY

Internal Revenue Service

Open Meeting of the Joint Committee of the Taxpayer Advocacy Panel

AGENCY: Internal Revenue Service (IRS), Treasury.

ACTION: Notice.

SUMMARY: An open meeting of the Joint Committee of the Taxpayer Advocacy Panel will be conducted via teleconference.

DATES: The meeting will be held Tuesday, January 20, 2004, at 1:30 p.m., eastern time.

FOR FURTHER INFORMATION CONTACT: Barbara Toy at 1–888–912–1227, or 414–297–1611.

SUPPLEMENTARY INFORMATION: Notice is hereby given pursuant to section 10(a)(2) of the Federal Advisory Committee Act, 5 U.S.C. App. (1988) that an open meeting of the Joint Committee of the Taxpayer Advocacy Panel (TAP) will be held Tuesday, January 20, 2004, from 1:30 to 3 p.m. Eastern time via a telephone conference call. If you would like to have the Joint Committee of TAP consider a written statement, please call 1–888–912–1227 or 414–297–1611, or write Barbara Toy, TAP Office, MS–1006–MIL, 310 West Wisconsin Avenue, Milwaukee, WI 53203–2221, or FAX to 414–297–1623. Due to limited conference lines, notification of intent to participate in the telephone conference call meeting must be made with Barbara Toy. Ms. Toy can be reached at 1–888–912–1227 or 414–297–1611, or FAX 414–297–1623.

The agenda will include the following: monthly committee summary report, discussion of issues brought to the joint committee, office report and discussion of next meeting.

Dated: December 19, 2003.

Bernard Coston,

Director, Taxpayer Advocacy Panel.

[FR Doc. 03–31829 Filed 12–24–03; 8:45 am]

BILLING CODE 4830–01–P

DEPARTMENT OF VETERANS AFFAIRS

Medical Research Service Merit Review Committee, Notice of Meetings

The Department of Veterans Affairs gives notice under the Public Law 92–463 (Federal Advisory Committee Act) that the Medical Research Service Merit Review Committee will meet from 9 a.m. to 3 p.m. on January 13, 2004, at the Governor's House Hotel, 1615 Rhode Island Avenue, NW., Washington, DC.

The purpose of the Committee is to provide advice to the Under Secretary for Health on the review of the scientific merit of research conducted in each specialty by Department of Veterans Affairs (VA) investigators working in VA Medical Centers and Clinics.

The meeting will be open to the public for approximately one hour at the start to discuss the general status of the program. The remaining portion of the meeting will be closed to the public for discussion and evaluation of the scientific review of initial and renewal projects.

The closed portion of the meeting involves discussion, examination, reference to and oral review of site visits, staff and consultant critiques of research protocols and similar documents. During the portion of the meeting, discussion and recommendations will deal with qualifications of personnel conducting the studies, the disclosure of which would constitute a clearly unwarranted invasion of personal privacy, as well as research information, the premature disclosure of which could significantly frustrate implementation of proposed agency action regarding such research projects.

As provided by subsection 10(d) of Public Law 92–463, as amended, closing a portion of the meeting is in accordance with 5 U.S.C. 552b(c)(b) and (9)(B). Those who plan to attend or would like to obtain a copy of minutes of the meeting should contact LeRoy G. Frey, Ph.D., Chief, Program Review Division, Medical Research Service (121F), Department of Veterans Affairs, Washington, DC, (202) 254–0288.

Dated: December 19, 2003.

By Direction of the Secretary.

E. Philip Riggin,

Committee Management Officer.

[FR Doc. 03–31815 Filed 12–24–03; 8:45 am]

BILLING CODE 8320–01–M

DEPARTMENT OF VETERANS AFFAIRS

Advisory Committee on Women Veterans; Notice of Meeting

The Department of Veterans Affairs (VA) gives notice under Public Law 92–463 (Federal Advisory Committee Act) that the Advisory Committee on Women Veterans will meet January 27–29, 2004, from 8 a.m. to 4:30 p.m., in VA Central Office, 810 Vermont Avenue, NW., Washington, DC 20420. On January 27 and 29, the meeting will be held in room C–7 and on January 28, the

meeting will be held in room 630. The meeting is open to the public.

The purpose of the Committee is to advise the Secretary of Veterans Affairs regarding the needs of women veterans with respect to health care, rehabilitation, compensation, outreach, and other programs and activities administered by VA designed to meet such needs. The Committee will make recommendations to the Secretary regarding such programs and activities.

On January 27, the agenda will include briefings and updates on issues related to women veterans' issues in VA Veterans Health Administration, research studies on women veterans' health, the Capital Asset Realignment for Enhanced Services (CARES) process, focus group site visits, the Stakeholder Engagement Survey administered by the General Services Administration, and presentations of Certificates of Appointment to two new Committee members. On January 28, the Committee will be briefed on legislative issues affecting women veterans, compensation and pension benefits, and the Veterans' Employment and Training Service administered by the Department of Labor. On January 29, the Committee will receive updates on the VA Homeless Program, the required ethics briefing, and any new issues that the Committee members may introduce.

Any member of the public wishing to attend should contact Ms. Rebecca Schiller, at the Department of Veterans Affairs, Center for Women Veterans (00W), 810 Vermont Avenue, NW., Washington, DC 20420. Ms. Schiller may be contacted either by phone at (202) 273–6193, fax at (202) 273–7092, or e-mail at *00W@mail.va.gov.* Interested persons may attend, appear before, or file statements with the Committee. Written statements must be filed before the meeting, or within 10 days after the meeting.

Dated: December 18, 2003.

By Direction of the Secretary.

E. Philip Riggin,

Committee Management Officer.

[FR Doc. 03–31814 Filed 12–24–03; 8:45 am]

BILLING CODE 8320–01–M

DEPARTMENT OF VETERANS AFFAIRS

Privacy Act of 1974; System of Records

AGENCY: Department of Veterans Affairs (VA).

ACTION: Notice of amendment to system of records.

SUMMARY: The Privacy Act of 1974 (5 U.S.C. 552a(e) (4)) requires that all agencies publish in the **Federal Register** a notice of the existence and character of their systems of records. Notice is hereby given that the Department of Veterans Affairs (VA) is amending the system of records entitled, ''Agent Orange Registry—VA'' (105VA131) as set forth in the **Federal Register** 66 FR 3653–3656 dated January 16, 2001. VA is amending the system by revising the System Location, the Categories of Individuals Covered by this System, the Authority for Maintenance of the System, the Routine Uses of Records Maintained in the System, Including Categories of Users and the Purposes of Such Uses, and the Policies and Practices for Storing, Retrieving, Accessing, Retaining and Disposing of Records in the System. VA is republishing the system notice in its entirety.

DATES: Comments on the establishment of this system of records must be received no later than January 28, 2004. If no public comment is received, the amended system will become effective January 28, 2004.

ADDRESSES: You may mail or hand-deliver written comments concerning the proposed amended system of records to the Director, Regulations Management (00REG1), Department of Veterans Affairs, 810 Vermont Avenue, NW., Washington, DC 20420; or fax comments to (202) 273–9026; or e-mail comments to ''*OGCRegulations@mail.va.gov*''. All relevant material received before January 28, 2004, will be considered. Comments will be available for public inspection at the above address in the Office of Regulations Management, Room 1063B, between the hours of 8 a.m. and 4:30 p.m., Monday through Friday (except holidays).

FOR FURTHER INFORMATION CONTACT: Veterans Health Administration (VHA) Privacy Act Officer (19F2), Department of Veterans Affairs, 810 Vermont Avenue, NW., Washington, DC 20420, (727) 320–1839.

SUPPLEMENTARY INFORMATION: VA expanded the Agent Orange Registry Program to provide registry examinations not only to the veterans who served in Vietnam between 1962 and 1975 and veterans who served in Korea between 1968 and 1969, but all other United States veterans who may have been exposed to dioxin or other toxic substances in a herbicide or defoliant during the conduct of or as a result of testing, transporting or spraying of herbicides for military purposes.

The Agent Orange Registry (AOR) located at the Austin Automation Center (AAC), Austin, Texas, is an automated integrated system containing demographic and medical data of all these registry examinations from 1988. These data were entered manually on code sheets by VA facility staff and copies sent to the AAC for entry into the AOR data set.

The AOR system of records located at VA Central Office, Washington, DC, is an optical disk system containing images of paper records, *i.e.*, code sheets, medical records, correspondence and questionnaires relating to the veterans exposed to agent orange. Once these paper records are scanned on optical disks, they are disposed of in accordance with VHA Records Control Schedule (RCS) 10.1.

The System Location has been amended to include the AOR system's change to a secure web-based data entry procedure. The process moved to a secure web-based data entry system at each VA facility during the first quarter of calendar year 2003. The secure web-based data entry system is maintained by the AAC and provides retrievable images to users. The optical disk system is currently being utilized where there is no access to the secure web-based system. However, the optical disk system is scheduled to be discontinued in 2004 and all access to the AOR system will be through the secure web-based data entry system.

The Categories of Individuals Covered by this System has been amended to the following:

Veterans who may have been exposed to dioxin or other toxic substance in an herbicide or defoliant during:

1. Active military service in the Republic of Vietnam between 1962 and 1975,
2. The Republic of Korea between 1968–1969,
3. The conduct of or as a result of testing, transporting or spraying herbicides for military purposes, and
4. Have had an AOR examination at a VA medical facility.

The Authority for Maintenance of the System has been amended to delete a duplicate reference to U.S.C. 1710(e)(1)(B).

VA is proposing to amend the following routine use disclosures of information to be maintained in the system:

- Routine use number seven (7) is being amended in its entirety. VA must be able to comply with the requirements of agencies charged with enforcing the law and conducting investigations. VA must also be able to provide information to state or local agencies charged with

protecting the public's health as set forth in state law. The routine use will be as follows:

On its own initiative, VA may disclose information, except for the names and home addresses of veterans and their dependents, to a Federal, state, local, tribal or foreign agency charged with the responsibility of investigating or prosecuting civil, criminal or regulatory violations of law, or charged with enforcing or implementing the statute, regulation, rule or order issued pursuant thereto. On its own initiative, VA may also disclose the names and addresses of veterans and their dependents to a Federal agency charged with the responsibility of investigating or prosecuting civil, criminal or regulatory violations of law, or charged with enforcing or implementing the statute, regulation, rule or order issued pursuant thereto.

The Privacy Act permits VA to disclose information about individuals without their consent for a routine use when the information will be used for a purpose that is compatible with the purpose for which we collected the information. In all of the routine use disclosures described above, the recipient of the information will use the information in connection with a matter relating to one of VA's programs, will use the information to provide a benefit to VA, or disclosure is required by law.

Under section 264, Subtitle F of Title II of the Health Insurance Portability and Accountability Act of 1996 (HIPAA) Public Law 104–191, 100 Stat. 1936, 2033–34 (1996), the United States Department of Health and Human Services (HHS) published a final rule, as amended, establishing Standards for Privacy of Individually-Identifiable Health Information, 45 CFR parts 160 and 164. VHA may not disclose individually-identifiable health information (as defined in HIPAA and the Privacy Rule, 42 U.S.C. 1320(d)(6) and 45 CFR 164.501) pursuant to a routine use unless either: (a) The disclosure is required by law, or (b) the disclosure is also permitted or required by the HHS Privacy Rule. The disclosures of individually-identifiable health information contemplated in the routine uses published in this amended system of records notice are permitted under the Privacy Rule or required by law. However, to also have authority to make such disclosures under the Privacy Act, VA must publish these routine uses. Consequently, VA is publishing these routine uses and is adding a preliminary paragraph to the routine uses portion of the system of records notice stating that any disclosure pursuant to the routine uses in this system of records notice must be either required by law or permitted by the Privacy Rule before VHA may disclose the covered information.

The Storage section of Policies and Practices for Storing, Retrieving, Accessing, Retaining and Disposing of Records in the System has been amended to address the data collection process move to a web-based system.

References throughout the system notice to VA Headquarters have been amended to VA Central Office.

The Report of Intent to Publish an Amended System of Records and an advance copy of the system notice have been sent to the appropriate Congressional committees and to the Director of Office of Management and Budget (OMB) as required by 5 U.S.C. 552a(r) (Privacy Act) and guidelines issued by OMB (65 FR 77677), December 12, 2000.

Approved: December 18, 2003.

Anthony J. Principi,

Secretary of Veterans Affairs.

105VA131

SYSTEM NAME:

Agent Orange Registry—VA.

SYSTEM LOCATION:

Character-based data from Agent Orange Registry (AOR) Code Sheets are maintained in a registry dataset at the Austin Automation Center (AAC), 1615 Woodward Street, Austin, Texas 78772. Since the data set at the AAC is not all-inclusive, *i.e.*, narratives, signatures, *etc.,* noted on the code sheets are not entered into this system, images of the code sheets are maintained at the Department of Veterans Affairs, Environmental Agents Service (131), 810 Vermont Avenue, NW., Washington, DC 20420. These are electronic images of paper records, *i.e.*, code sheets, medical records, questionnaires and correspondence that are stored on optical disks.

The secure web-based data entry system is maintained by the AAC and provides retrievable images to users. The optical disk system is currently being utilized where there is no access to the secure web-based system. However, the optical disk system is scheduled to be discontinued in 2004 and all access to the AOR system will be through the secure web-based data entry system.

CATEGORIES OF INDIVIDUALS COVERED BY THIS SYSTEM:

Veterans who may have been exposed to dioxin or other toxic substance in a herbicide or defoliant during:

1. Active military service in the Republic of Vietnam between 1962 and 1975,

2. The Republic of Korea between 1968 and 1969,

3. The conduct of or as a result of testing, transporting or spraying herbicides for military purposes, and

4. Have had an AOR examination at a Department of Veterans Affairs (VA) medical facility.

CATEGORIES OF RECORDS IN THE SYSTEM:

These records may contain the following information: Code sheet records recording VA facility code identifier where the veteran was examined or treated; veteran's name; address; social security number; military service serial number; claim number; date of birth; race/ethnicity; marital status; sex; branch of service; periods of service; areas of service in Vietnam; list of military units where veteran served; method of exposure to herbicides; veteran's self-assessment of health; date of registry examination; veteran's complaints/symptoms; reported birth defects among veteran's children; consultations; diagnoses; disposition (hospitalized, referred for outpatient treatment, etc.) and name and signature of examiner/clinician coordinator, when available.

AUTHORITY FOR MAINTENANCE OF THE SYSTEM:

Title 38, United States Code (U.S.C.) 1710(e)(1)(B) and 1720E.

PURPOSE(S):

The purpose of this AOR system of records is to provide information about: Veterans who have had an AOR examination at a VA facility; to assist in generating hypotheses for research studies; provide management with the capability to track patient demographics; reported birth defects among veterans' children; dioxin-related diseases; planning and delivery of health care services and associated costs; and with relation to claims for compensation which may assist in the adjudication of claims possibly related to herbicide exposure although more comprehensive medical records are required for evaluation of subject claims.

ROUTINE USES OF RECORDS MAINTAINED IN THE SYSTEM, INCLUDING CATEGORIES OF USERS AND THE PURPOSES OF SUCH USES:

VA may disclose protected health information pursuant to the following routine uses where required by law, or required or permitted by 45 CFR parts 160 and 164.

1. The record of an individual who is covered by this system may be disclosed to a member of Congress or staff person

acting for the member when the member or staff person requests the record on behalf of, and at the written request of, that individual.

2. Disclosure of records covered by this system, as deemed necessary and proper to named individuals serving as accredited service organization representatives, and other individuals named as approved agents or attorneys for a documented purpose and period of time, to aid beneficiaries in the preparation and presentation of their cases during the verification and/or due process procedures, and in the presentation and prosecution of claims under laws administered by VA.

3. A record containing the name(s) and address(es) of present or former members of the armed services and/or their dependents may be released from this system of records under certain circumstances:

(a) To any nonprofit organization if the release is directly connected with the conduct of programs and the utilization of benefits under Title 38, and

(b) To any criminal or civil law enforcement governmental agency or instrumentality charged under applicable law with the protection of the public health or safety if a qualified representative of such organization, agency or instrumentality has made a written request that such name(s) or address(es) be provided for a purpose authorized by law; provided, further, that the record(s) will not be used for any purpose other than that stated in the request and that the organization, agency or instrumentality is aware of the penalty provision of 38 U.S.C. 5701(f).

4. Disclosure may be made to the National Archives and Record Administration (NARA) in records management inspections conducted under authority of 44 U.S.C.

5. Disclosure of information, excluding name and address (unless name and address is furnished by the requestor) for research purposes determined to be necessary and proper, to epidemiological and other research facilities approved by the Under Secretary for Health.

6. In order to conduct Federal research necessary to accomplish a statutory purpose of an agency, at the written request of the head of the agency, or designee of the head of that agency, the name(s) and address(es) of present or former personnel or the Armed Services and/or their dependents may be disclosed

(a) To a Federal department or agency, or

(b) Directly to a contractor of a Federal department or agency. When a disclosure of this information is to be made directly to the contractor, VA may impose applicable conditions on the department, agency, and/or contractor to insure the appropriateness of the disclosure to the contractor.

7. VA may disclose on its own initiative any information in this system, except the names and home addresses of veterans and their dependents, which is relevant to a suspected or reasonably imminent violation of law, whether civil, criminal or regulatory in nature and whether arising by general or program statute or by regulation, rule or order issued pursuant thereto, to a Federal, State, local, tribal, or foreign agency charged with the responsibility of investigating or prosecuting such violation, or charged with enforcing or implementing the statute, regulation, rule or order. On its own initiative, VA may also disclose the names and addresses of veterans and their dependents to a Federal agency charged with the responsibility of investigating or prosecuting civil, criminal or regulatory violations of law, or charged with enforcing or implementing the statute, regulation, rule or order issued pursuant thereto.

8. For program review purposes and the seeking of accreditation and/or certification, disclosure may be made to survey teams of the Joint Commission on Accreditation of Healthcare Organizations (JCAHO), College of American Pathologists, American Association of Blood Banks, and similar national accreditation agencies or boards with whom VA has a contract or agreement to conduct such reviews, but only to the extent that the information is necessary and relevant to the review.

9. Records from this system of records may be disclosed to the Department of Justice (DOJ) or in a proceeding before a court, adjudicative body, or other administrative body before which the Department is authorized to appear when: (a) The Department, or any component thereof; or (b) any employee of the Department in his or her official capacity where the DOJ or the Department has agreed to represent the employee; or (c) the U.S., when the Department determines that litigation is likely to affect the Department or any of its components; is a party to litigation, and has an interest in such litigation, and the use of such records by the DOJ or the Department is deemed by the Department to be relevant and necessary to the litigation provided, however, that the disclosure is compatible with the purpose for which the records were collected.

POLICIES AND PRACTICES FOR STORING, RETRIEVING, ACCESSING, RETAINING AND DISPOSING OF RECORDS IN THE SYSTEM:

STORAGE:

In 2003, the data collection process moved to a secure web-based system. Data previously recorded manually and converted to electronic format is now input through the secure VA Intranet system. Data is stored on a web server hosted by the AAC and is retrievable by the facility. Three levels of access are provided for the data that is input, using password security linked to the AAC Top Secret Security system, with mandated changes every 90 days. Data from individual facilities is uploaded nightly and stored on Direct Access Storage Devices at the AAC, Austin, Texas, and on optical disks at VA Central Office, Washington, DC. AAC stores registry tapes for disaster back up at an off-site location. VA Central Office also has back-up optical disks stored off-site. In addition to electronic data, registry reports are maintained on paper documents and microfiche.

The optical disk system is currently being utilized where there is no access to the secure web-based system. The optical disk system is scheduled to be discontinued in 2004 and all access to the AOR system will be through the secure web-based data entry system. Records will be maintained and disposed of in accordance with records disposition authority approved by the Archivist of the United States.

RETRIEVABILITY:

Records are retrieved by name of veteran and social security number.

SAFEGUARDS:

Access to records at VA Central Office is only authorized to VA personnel on a ''need to know'' basis. Records are maintained in manned rooms during working hours. During non-working hours, there is limited access to the building with visitor control by security personnel. Registry data maintained at the AAC can only be updated by authorized AAC personnel.

Data is securely located behind the VA firewall and only accessible from the VA Local Area Network (LAN) through the VA Intranet. Read access to the data is granted through a telecommunications network to authorized VA Central Office staff. AAC reports are also accessible through a telecommunications network on a read-only basis to the owner (VA facility) of the data. Access is limited to authorized employees by individually unique access codes which are changed periodically.

Physical access to the AAC is generally restricted to AAC staff, VA Central Office staff, custodial personnel, Federal Protective Service and authorized operational personnel through electronic locking devices. All other persons gaining access to the computer rooms are escorted. Backup records stored off-site for both the AAC and VA Central Office are safeguarded in secured storage areas. A disaster recovery plan is in place and system recovery is tested at an off-site facility in accordance with established schedules.

RETENTION AND DISPOSAL:

Records will be maintained and disposed of in accordance with records disposition authority approved by the Archivist of the United States.

SYSTEM MANAGER(S) AND ADDRESS:

Director, Environmental Agents Service (131), Office of Public Health and Environmental Hazards, (clinical issues) and Management/Program Analyst, Environmental Agents Service (131) (administrative issues), VA Central Office, 810 Vermont Avenue, NW., Washington, DC 20420.

NOTIFICATION PROCEDURE:

An individual who wishes to determine whether a record is being maintained in this system under his or her name or other personal identifier, or wants to determine the contents of such record, should submit a written request or apply in person to the last VA facility where medical care was provided or submit a written request to the Director, Environmental Agents Service (131), Office of Public Health and Environmental Hazards or the Management/Program Analyst, Environmental Agents Service (131), VA Central Office, 810 Vermont Avenue, NW., Washington, DC 20420. Inquiries should include the veteran's name, social security number and return address.

RECORD ACCESS PROCEDURES:

An individual who seeks access to records maintained under his or her name may write or visit the nearest VA facility or write to the Director, Environmental Agents Service (131) or the Management/Program Analyst, Environmental Agents Service (131), VA Central Office, 810 Vermont Avenue, NW., Washington, DC 20420.

CONTESTING RECORDS PROCEDURES:

Refer to previous item ''Record Access Procedures.''

RECORD SOURCE CATEGORIES:

VA patient medical records, various automated record systems providing clinical and managerial support to VA health care facilities, the veteran, family members, and records from the Veterans Benefits Administration, Department of Defense, Department of the Army, Department of the Air Force, Department of the Navy and other Federal agencies.

[FR Doc. 03–31812 Filed 12–24–03; 8:45 am]

BILLING CODE 8320–01–P

DEPARTMENT OF VETERANS AFFAIRS

Privacy Act of 1974; System of Records

AGENCY: Department of Veterans Affairs (VA).

ACTION: Notice of amendment to system of records.

SUMMARY: The Privacy Act of 1974 (5 U.S.C. 552a(e) (4)) requires that all agencies publish in the **Federal Register** a notice of the existence and character of their systems of records. Notice is hereby given that the Department of Veterans Affairs (VA) is amending the system of records entitled ''Ionizing Radiation Registry—VA'' (69VA131) as set forth **Federal Register** 56 FR 26186 dated June 6, 1991, and last amended in the **Federal Register** 66 FR 30271–30273 dated June 5, 2001. VA is amending the system by revising the System Location, the Categories of Individuals Covered by this System, the Authority for Maintenance of the System, the Purpose(s) of the system, the Routine Uses of Records Maintained in the System, Including Categories of Users and the Purposes of Such Uses, and the Policies and Practices for Storing, Retrieving, Accessing, Retaining and Disposing of Records in the System. VA is republishing the system notice in its entirety.

DATES: Comments on the amendment of this system of records must be received no later than January 28, 2004. If no public comment is received, the amended system will become effective January 28, 2004.

ADDRESSES: You may mail or hand-deliver written comments concerning the proposed amended system of records to the Director, Regulations Management (00REG1), Department of Veterans Affairs, 810 Vermont Avenue, NW., Washington, DC 20420; or fax comments to (202) 273–9026; or e-mail comments to ''*OGCRegulations@mail.va.gov*''. All relevant material received before January 28, 2004, will be considered. Comments will be available for public inspection at the above address in the Office of Regulations Management, Room 1063B, between the hours of 8 a.m. and 4:30 p.m., Monday through Friday (except holidays).

FOR FURTHER INFORMATION CONTACT: Veterans Health Administration (VHA) Privacy Act Officer (19F2), Department of Veterans Affairs, 810 Vermont Avenue, NW., Washington, DC 20420, (727) 320–1839.

SUPPLEMENTARY INFORMATION: The Ionizing Radiation Registry (IRR) program is located at the Austin Automation Center (AAC), Austin, Texas, is an automated integrated system containing demographic and medical data of registry examinations from 1981 through the current date. These data were entered manually on code sheets by VA facility staff and hard copies were sent to the AAC for entry into the IRR data set. The IRR system of records located at VA Central Office, Washington, DC, is an optical disk system containing images of paper records, *i.e.*, code sheets, medical records, correspondence and questionnaires relating to the veterans exposed to ionizing radiation. Once these paper records are scanned on optical disks, they are disposed of in accordance with VHA Records Control Schedule (RCS) 10–1.

The System Location has been amended to include the IRR system's change to a secure web-based data entry procedure. The process moved to a secure web-based data entry system at each VA facility during the first quarter of calendar year 2003. The secure web-based data entry system is maintained by the AAC and provides retrievable images to users. The optical disk system is currently being utilized where there is no access to the secure web-based system. However, the optical disk system is scheduled to be discontinued in 2004 and all access to the IRR system will be through the secure web-based data entry system.

As amended by Title 38, Code of Federal Regulations, the Categories of Individuals Covered by this System has been amended. This system will continue to include data collected for veterans who may have been exposed to a radiation-risk activity, as authorized by Title 38, U.S.C., under the following conditions:

1. On-site participation in a test involving the atmospheric detonation of a nuclear weapon, whether or not the testing nation was the United States. Note: Reference to the timeframe

between 1945 and 1962 has been deleted.

2. Participation in the occupation of Hiroshima or Nagasaki from August 6, 1945, through July 1, 1946; or

(a) Internment as a Prisoner-of-War in Japan during World War II that the Secretary of Veterans Affairs determines resulted in an opportunity for exposure to ionizing radiation comparable to that of veterans involved in the occupation of Hiroshima or Nagasaki;

3. Who have received nasopharyngeal (NP) radium treatments during active military, naval or air service.

4. Participated in radiation-risk activities, at the:

a. Department of Energy gaseous diffusion plants at Paducah, KY, Portsmouth, OH, or K25 area at Oak Ridge, TN, for at least 250 days before February 1, 1992;

b. Underground nuclear tests at Amchitka Island, AK, before January 1, 1974

The Categories of Individuals Covered by this System has also been amended as this system of record describes registries, not treatment or claims. Upon review of the system, the following former statements were found to be no longer necessary and are being deleted:

- 3 (a) veterans who apply for hospital or nursing home care under Title 38 United States Code, Chapter 17;
- 3 (b) files a claim for compensation under Title 38 United States Code, Chapter 11; or
- 3 (c) dies and is survived by a spouse, child, or parent who files a claim for dependency and indemnity compensation under Title 38 United States Code, Chapter 3;

A duplicate reference to U.S.C. 1710(e)(1)(B) in this paragraph has also been deleted.

In addition to the categories of records maintained in the IRR system, clinicians' names and titles are included but may not be retrievable. Outdated information related to the estimate of the radiation doses to which the veterans are exposed while on active military duty has been deleted from these records.

These IRR records may have several identifiers—Department of Defense data are identified by military service number and only 25 percent are identified by social security numbers.

The Authority for Maintenance of the System has been amended to delete a duplicate reference to U.S.C. 1710(e)(1)(B).

The Purpose(s) of this system of records has been amended to further define the use of the records. The purpose of this IRR system of records is to provide information about veterans who have had an IRR examination at a VA facility, to assist in generating hypotheses for research studies, provide management with the capability to track patient demographics, reported birth defects among veterans' children or grandchildren; and radiogenic related diseases and planning and delivery of health care services and associated costs. The records are used to assist in generating hypotheses for research studies. Because of the self-selected nature of the registry participants, *i.e.* the individuals decide themselves to be part of the registry rather than being ''chosen'' in a scientific manner, this group cannot be used for scientific research. However, the IRR may assist researchers by providing clues or suggestions of specific health problems that then form the basis for the design and conduct of specific scientific studies.

VA is amending the following routine use disclosures of information to be maintained in the system:

- Routine use number nine (9) is being amended in its entirety. VA must be able to comply with the requirements of agencies charged with enforcing the law and conducting investigations. VA must also be able to provide information to state or local agencies charged with protecting the public's health as set forth in state law. The routine use will be as follows: On its own initiative, VA may disclose information, except for the names and home addresses of veterans and their dependents, to a Federal, state, local, tribal or foreign agency charged with the responsibility of investigating or prosecuting civil, criminal or regulatory violations of law, or charged with enforcing or implementing the statute, regulation, rule or order issued pursuant thereto. On its own initiative, VA may also disclose the names and addresses of veterans and their dependents to a Federal agency charged with the responsibility of investigating or prosecuting civil, criminal or regulatory violations of law, or charged with enforcing or implementing the statute, regulation, rule or order issued pursuant thereto.

The Privacy Act permits VA to disclose information about individuals without their consent for a routine use when the information will be used for a purpose that is compatible with the purpose for which we collected the information. In all of the routine use disclosures described above, the recipient of the information will use the information in connection with a matter relating to one of VA's programs, will use the information to provide a benefit to VA, or disclosure is required by law.

Under section 264, Subtitle F of Title II of the Health Insurance Portability and Accountability Act of 1996 (HIPAA) Public Law 104–191, 100 Stat. 1936, 2033–34 (1996), the United States Department of Health and Human Services (HHS) published a final rule, as amended, establishing Standards for Privacy of Individually-Identifiable Health Information, 45 CFR parts 160 and 164. VHA may not disclose individually-identifiable health information (as defined in HIPAA and the Privacy Rule, 42 U.S.C. 1320(d)(6) and 45 CFR 164.501) pursuant to a routine use unless either: (a) The disclosure is required by law, or (b) the disclosure is also permitted or required by the HHS Privacy Rule. The disclosures of individually-identifiable health information contemplated in the routine uses published in this amended system of records notice are permitted under the Privacy Rule or required by law. However, to also have authority to make such disclosures under the Privacy Act, VA must publish these routine uses. Consequently, VA is publishing these routine uses and is adding a preliminary paragraph to the routine uses portion of the system of records notice stating that any disclosure pursuant to the routine uses in this system of records notice must be either required by law or permitted by the Privacy Rule before VHA may disclose the covered information.

The Storage section of Policies and Practices for Storing, Retrieving, Accessing, Retaining and Disposing of Records in the System has been amended to address the data collection process move to a web-based system.

Safeguards have been amended to state that data is securely located behind the VA firewall and only accessible from the VA Local Area Network (LAN) through the VA Intranet.

References throughout the system notice to VA Headquarters have been amended to VA Central Office.

The Report of Intent to Publish an Amended System of Records and an advance copy of the system notice have been sent to the appropriate Congressional committees and to the Director of Office of Management and Budget (OMB) as required by 5 U.S.C. 552a(r) (Privacy Act) and guidelines issued by OMB (65 FR 77677), December 12, 2000.

Approved: December 18, 2003.

Anthony J. Principi,

Secretary of Veterans Affairs.

69VA131

SYSTEM NAME:

Ionizing Radiation Registry—VA.

SYSTEM LOCATION:

Character-based data from Ionizing Radiation Code Sheets are maintained in a registry data set at the Austin Automation Center (AAC), 1615 Woodward Street, Austin, Texas 78772. Since the data set at the AAC is not all-inclusive, *i.e.*, narratives, signatures, etc., noted on the code sheets are not entered into this system, images of the code sheets are maintained at the Department of Veterans Affairs, Environmental Agents Service (131), 810 Vermont Avenue, NW., Washington, DC 20420. These are electronic images of paper records, *i.e.*, code sheets, medical records, questionnaires and correspondence that are stored on optical disks.

The secure web-based data entry system is maintained by the AAC and provides retrievable images to users. The optical disk system is currently being utilized where there is no access to the secure web-based system. However, the optical disk system is scheduled to be discontinued in 2004 and all access to the Ionizing Radiation Registry (IRR) system will be through the secure web-based data entry system.

CATEGORIES OF INDIVIDUALS COVERED BY THIS SYSTEM:

Veterans who may have been exposed to ionizing radiation while on active military duty and have had an IRR examination at a Department of Veterans Affairs (VA) medical facility under conditions described in Title 38 United States Code (U.S.C.) 1710(e)(1)(B) and 1720E. These conditions include:

1. On-site participation in a test involving the atmospheric detonation of a nuclear device at a nuclear device testing site—the Pacific Island, *e.g.*, Bikini, New Mexico, Nevada, etc. (whether or not the testing nation was the United States);

2. Participation in the occupation of Hiroshima or Nagasaki, Japan, from August 6, 1945, through July 1, 1946;

(a) Internment as a POW in Japan during World War II which the Secretary of Veterans Affairs determines resulted in an opportunity for exposure to ionizing radiation comparable to that of veterans involved in the occupation of Hiroshima or Nagasaki, Japan;

3. Treatment with nasopharyngeal (NP) radium irradiation while in the active military, naval or air service; and

4. Participated in radiation-risk activities at the:

(a) Department of Energy gaseous diffusion plants at Paducah, KY, Portsmouth, OH, or K25 area at Oak Ridge, TN, for at least 250 days before February 1, 1992;

(b) Underground nuclear tests at Amchitka Island, AK, before January 1, 1974.

CATEGORIES OF RECORDS IN THE SYSTEM:

These records consist of code sheet records containing VA facility code identifier where the veteran was examined or treated; veteran's name; address; social security number; military service serial number; claim number; date of birth; telephone number; sex; report of birth defects among veteran's children or grandchildren; dates of medical examinations; consultations; radiogenic related diseases; and name and signature of examiner/physician coordinator.

In addition, there may be medical records with information relating to the examination and/or treatment, including laboratory findings on vision, hearing, blood tests, electrocardiograms, chest x-rays, urinalysis, laboratory report displays, medical certificates to support diagnosis; progress notes; military unit assignments; questionnaires; correspondence relating to veteran's exposure history; personal history, *e.g.*, education, marital status, occupational history, family history, complaints/symptoms; personal medical history, habits, recreation, reproductive and family history, physical measurements; military discharge records; and VA claims for compensation.

AUTHORITY FOR MAINTENANCE OF THE SYSTEM:

Title 38, United States Code (U.S.C.) 1710(e)(1)(B) and 1720E.

PURPOSE(S):

The records will be used for the purpose of providing information about veterans who have had an IRR examination at a VA facility; assisting in generating hypotheses for research studies; providing management with the capability to track patient demographics, and radiogenic related diseases; and planning and delivery of health care services and associated costs. The records are used to assist in generating hypotheses for research studies. Because of the self-selected nature of the registry participants, *i.e.*, the individuals decide themselves to be part of the registry rather than being ''chosen'' in a scientific manner, this group cannot be used for scientific research. However, the IRR may assist researchers by providing clues or suggestions of specific health problems that then form the basis for the design and conduct of specific scientific studies.

ROUTINE USES OF RECORDS MAINTAINED IN THE SYSTEM, INCLUDING CATEGORIES OF USERS AND THE PURPOSES OF SUCH USES:

VA may disclose protected health information pursuant to the following routine uses where required by law, or required or permitted by 45 CFR parts 160 and 164.

1. The record of an individual who is covered by this system may be disclosed to a member of Congress or staff person acting for the member when the member or staff person requests the record on behalf of, and at the written request of, that individual.

2. Disclosure of records covered by this system, as deemed necessary and proper to named individuals serving as accredited service organization representatives, and other individuals named as approved agents or attorneys for a documented purpose and period of time, to aid beneficiaries in the preparation and presentation of their cases during the verification and/or due process procedures, and in the presentation and prosecution of claims under laws administered by VA.

3. A record containing the name(s) and address(es) of present or former members of the armed services and/or their dependents may be released from this system of records under certain circumstances:

(a) To any nonprofit organization if the release is directly connected with the conduct of programs and the utilization of benefits under Title 38, and

(b) To any criminal or civil law enforcement governmental agency or instrumentality charged under applicable law with the protection of the public health or safety if a qualified representative of such organization, agency or instrumentality has made a standing written request that such name(s) or address(es) be provided for a purpose authorized by law; provided, further, that the record(s) will not be used for any purpose other than that stated in the request and that the organization, agency or instrumentality is aware of the penalty provision of 38 U.S.C. 5701(f).

4. Disclosure may be made to the National Archives and Records Administration (NARA) in records management inspections conducted under authority of Title 44 U.S.C.

5. Disclosure of information, excluding name and address (unless name and address is furnished by the requestor) for research purposes determined to be necessary and proper, to epidemiological and other research facilities approved by the Under Secretary for Health.

6. In order to conduct Federal research necessary to accomplish a statutory purpose of an agency, at the written request of the head of the agency, or designee of the head of that agency, the name(s) and address(es) of present or former personnel or the Armed Services and/or their dependents may be disclosed

(a) To a Federal department or agency or

(b) Directly to a contractor of a Federal department or agency. When a disclosure of this information is to be made directly to the contractor, VA may impose applicable conditions on the department, agency, and/or contractor to insure the appropriateness of the disclosure to the contractor.

7. Any information in this system may be disclosed to a Federal grand jury, a Federal court or a party in litigation, or a Federal agency or party to an administrative proceeding being conducted by a Federal agency, in order for VA to respond to and comply with the issuance of a Federal subpoena.

8. Any information in this system may be disclosed to a state or municipal grand jury, a state or municipal court or a party in a litigation, or to a state or municipal administrative agency functioning in a quasi-judicial capacity or a party to a proceeding being conducted by such agency, in order for VA to respond to and comply with the issuance of a state or municipal subpoena; provided, that any disclosure or claimant information made under this routine use must comply with the provisions of 38 CFR 1.511.

9. VA may disclose on its own initiative any information in this system, except the names and home addresses of veterans and their dependents, which is relevant to a suspected or reasonably imminent violation of law, whether civil, criminal or regulatory in nature and whether arising by general or program statute or by regulation, rule or order issued pursuant thereto, to a Federal, State, local, tribal, or foreign agency charged with the responsibility of investigating or prosecuting such violation, or charged with enforcing or implementing the statute, regulation, rule or order. On its own initiative, VA may also disclose the names and addresses of veterans and their dependents to a Federal agency charged with the responsibility of investigating or prosecuting civil, criminal or regulatory violations of law, or charged with enforcing or implementing the statute, regulation, rule or order issued pursuant thereto.

10. For program review purposes and the seeking of accreditation and/or certification, disclosure may be made to survey teams of the Joint Commission on Accreditation of Healthcare Organizations (JCAHO), College of American Pathologists, American Association of Blood Banks, and similar national accreditation agencies or boards with whom VA has a contract or agreement to conduct such reviews, but only to the extent that the information is necessary and relevant to the review.

POLICIES AND PRACTICES FOR STORING, RETRIEVING, ACCESSING, RETAINING AND DISPOSING OF RECORDS IN THE SYSTEM:

STORAGE:

In 2003, the data collection process moved to a secure web-based system. Data previously recorded manually and converted to electronic format is now input through the secure VA Intranet system. Data is stored on a web server hosted by the AAC and is retrievable by the facility. Three levels of access are provided for the data that is input, using password security linked to the AAC Top Secret Security system, with mandated changes every 90 days. Data from individual facilities is uploaded nightly and stored on Direct Access Storage Devices at the AAC, Austin, Texas, and on optical disks at VA Central Office, Washington, DC. AAC stores registry tapes for disaster back up at an off-site location. VA Central Office also has back-up optical disks stored off-site. In addition to electronic data, registry reports are maintained on paper documents and microfiche.

The optical disk system is currently being utilized where there is no access to the secure web-based system. The optical disk system is scheduled to be discontinued in 2004 and all access to the IRR system will be through the secure web-based data entry system. Records will be maintained and disposed of in accordance with records disposition authority approved by the Archivist of the United States.

RETRIEVABILITY:

Documents are retrieved by name of veteran, social security number and service serial number.

SAFEGUARDS:

Access to records at VA Central Office is only authorized to VA personnel on a ''need to know'' basis. Records are maintained in manned rooms during working hours. During non-working hours, there is limited access to the building with visitor control by security personnel. Registry data maintained at the AAC can only be updated by authorized AAC personnel.

Data is securely located behind the VA firewall and only accessible from the VA Local Area Network (LAN) through the VA Intranet. Read access to the data is granted through a telecommunications network to authorized VA Central Office personnel. AAC reports are also accessible through a telecommunications network on a read-only basis to the owner (VA facility) of the data. Access is limited to authorized employees by individually unique access codes which are changed periodically.

Physical access to the AAC is generally restricted to AAC staff, VA Central Office, custodial personnel, Federal Protective Service and authorized operational personnel through electronic locking devices. All other persons gaining access to the computer rooms are escorted. Backup records stored off-site for both the AAC and VA Central Office are safeguarded in secured storage areas. A disaster recovery plan is in place and system recovery is tested at an off-site facility in accordance with established schedules.

RETENTION AND DISPOSAL:

Records will be maintained and disposed of in accordance with records disposition authority approved by the Archivist of the United States.

SYSTEM MANAGER(S) AND ADDRESS:

Program Chief for Clinical Matters, Office of Public Health and Environmental Hazards (13) (for clinical issues) and Management/Program Analyst, Environmental Agents Service (131) (for administrative issues), VA Central Office, 810 Vermont Avenue, NW., Washington, DC 20420.

NOTIFICATION PROCEDURE:

An individual who wishes to determine whether a record is being maintained in this system under his or her name or other personal identifier, or wants to determine the contents of such record, should submit a written request or apply in person to the last VA facility where medical care was provided or submit a written request to the Program Chief for Clinical Matters, Office of Public Health and Environmental Hazards (13) or the Management/Program Analyst, Environmental Agents Service (131), VA Central Office, 810 Vermont Avenue, NW., Washington, DC 20420. Inquiries should include the veteran's name, social security number, service serial number, and return address.

RECORD ACCESS PROCEDURES:

An individual who seeks access to records maintained under his or her name may write or visit the nearest VA facility or write to the Program Chief for

Clinical Matters, Office of Public Health and Environmental Hazards (13) or the Management/Program Analyst, Environmental Agents Service (131), VA Central Office, 810 Vermont Avenue, NW., Washington, DC 20420.

CONTESTING RECORDS PROCEDURES:

Refer to previous item ''Record Access Procedures.''

RECORD SOURCE CATEGORIES:

VA patient medical records, various automated record systems providing clinical and managerial support to VA health care facilities, the veteran, family members, and records from Veterans Benefits Administration, Department of Defense, Department of the Army, Department of the Air Force, Department of the Navy and other Federal agencies.

[FR Doc. 03–31813 Filed 12–24–03; 8:45 am]

BILLING CODE 8320–01–P

Corrections

Federal Register

Vol. 68, No. 248

Monday, December 29, 2003

This section of the FEDERAL REGISTER contains editorial corrections of previously published Presidential, Rule, Proposed Rule, and Notice documents. These corrections are prepared by the Office of the Federal Register. Agency prepared corrections are issued as signed documents and appear in the appropriate document categories elsewhere in the issue.

ENVIRONMENTAL PROTECTION AGENCY

40 CFR Part 63

[Docket ID No. OAR–2003–0178; FRL–7554–3]

RIN 2060–AK59

National Emission Standards for Hazardous Air Pollutants: Miscellaneous Coating Manufacturing

Correction

In rule document 03–22928 beginning on page 69164 in the issue of Thursday, December 11, 2003, make the following correction:

§63.7995 [Corrected]

On page 69186, in §63.7995(b), in the final line, the date ''December 11, 2005,'' should read, ''December 11, 2006.''

[FR Doc. C3–22928 Filed 12–24–03; 8:45 am]

BILLING CODE 1505–01–D

ENVIRONMENTAL PROTECTION AGENCY

40 CFR Part 81

[FRL–7599–7]

RIN 2060–AL85

Deferral of Effective Date of Nonattainment Designations for 8–Hour Ozone National Ambient Air Quality Standards for Early Action Compact Areas

Correction

In proposed rule document 03–31109 beginning on page 70108 in the issue of Tuesday, December 16, 2003, make the following correction:

On page 70119, in the third column, the signature date of ''November 11, 2003'' should read, ''December 11, 2003''.

[FR Doc. C3–31109 Filed 12–24–03; 8:45 am]

BILLING CODE 1505–01–D

Federal Register

Monday,
December 29, 2003

Part II

Department of the Interior

Office of Surface Mining Reclamation and Enforcement

30 CFR Parts 701, 773, et al.
Ownership and Control Settlement Rule; Proposed Rule

DEPARTMENT OF THE INTERIOR

Office of Surface Mining Reclamation and Enforcement

30 CFR Parts 701, 773, 774, 778, 843 and 847

RIN 1029–AC08

Ownership and Control Settlement Rule

AGENCY: Office of Surface Mining Reclamation and Enforcement, Interior.

ACTION: Proposed rule.

SUMMARY: We, the Office of Surface Mining Reclamation and Enforcement (OSM), propose to amend certain provisions of our December 19, 2000, final ownership and control rule (hereinafter referred to as the 2000 final rule) in order to effectuate a settlement agreement we entered into with the National Mining Association (NMA). Specifically, we propose to amend the provisions of the 2000 final rule pertaining to the definitions of ownership and control; permit eligibility determinations; eligibility for provisionally issued permits; improvidently issued permits; challenges to ownership or control listings or findings; post-permit issuance requirements for regulatory authorities and other actions based on ownership, control, and violation information; providing applicant, operator, and ownership and control information; improvidently issued State permits; and alternative enforcement. This proposed rule does not suspend any of the provisions of the 2000 final rule. The proposed revisions are authorized under the Surface Mining Control and Reclamation Act of 1977, as amended (hereinafter referred to as SMCRA or the Act).

DATES: *Written comments:* We will accept written comments on the proposed rule until 5 p.m., Eastern Time, on February 27, 2004.

Public hearings: Upon request, we will hold a public hearing on the proposed rule at a date, time, and location to be announced in the **Federal Register** before the hearing. We will accept requests for a public hearing until 5 p.m., Eastern Time, on January 20, 2004. If you wish to attend a hearing, but not speak, you should contact the person identified under **FOR FURTHER INFORMATION CONTACT** before the hearing date to verify that the hearing will be held. If you wish to attend and speak at a hearing, you should follow the procedures under ''III. Public Comment Procedures.''

ADDRESSES: If you wish to provide written comments, you may submit your comments by any one of three methods (see ''III. Public Comment Procedures''). We will make comments available for public viewing during regular business hours. You may mail or hand-deliver comments to the Office of Surface Mining Reclamation and Enforcement, Administrative Record, Room 101, 1951 Constitution Avenue, NW., Washington, DC 20240. You may also submit comments electronically to OSM at the following Internet address: *osmrules@osmre.gov.*

If you wish to comment on the information collection aspects of this proposed rule, submit your comments to the Office of Management and Budget, Office of Information and Regulatory Affairs, Attention: Interior Desk Officer, via e-mail to *OIRA_DOCKET@omb.eop.gov* or via facsimile to (202) 395–6566.

You may submit a request for a public hearing orally or in writing to the person and address specified under **FOR FURTHER INFORMATION CONTACT**. We will announce the address, date and time for any hearing in the **Federal Register** before the hearing. If you are disabled and require special accommodation to attend a public hearing, you should contact the person listed under **FOR FURTHER INFORMATION CONTACT**.

FOR FURTHER INFORMATION CONTACT: Earl D. Bandy, Jr., Office of Surface Mining Reclamation and Enforcement, Appalachian Regional Coordinating Center, Applicant/Violator System Office, 2679 Regency Road, Lexington, Kentucky 40503. Telephone: (859) 260–8424 or (800) 643–9748. E-Mail: *ebandy@osmre.gov.*

SUPPLEMENTARY INFORMATION:

Table of Contents

I. Background to the Proposed Rule
II. Discussion of the Proposed Rule
III. Public Comment Procedures
IV. Procedural Determinations

I. Background to the Proposed Rule

This proposed rule would amend certain provisions of our 2000 final ownership and control rule published on December 19, 2000 at 65 FR 79582. That rule, which took effect for Federal programs (*i.e.*, SMCRA programs for which OSM is the regulatory authority) on January 18, 2001, primarily addresses ownership or control of surface coal mining operations under section 510(c) of SMCRA. 30 U.S.C. 1260(c). Under section 510(c), a permit applicant is not eligible to receive a permit if the applicant owns or controls any surface coal mining operation that is in violation of SMCRA or other applicable laws. In addition to implementing section 510(c), the rule also addresses, among other things, permit application information requirements, post-permit issuance information requirements, entry of information into the Applicant/Violator System (AVS), application processing procedures, and alternative enforcement. *See generally* 65 FR 79661–71.

On February 15, 2001, the National Mining Association (NMA) filed a lawsuit in the U.S. District Court for the District of Columbia in which it challenges the 2000 final rule on multiple grounds. *National Mining Ass'n* v. *Office of Surface Mining,* No. 01–366 (CKK) (D.D.C.). NMA's lawsuit is the latest chapter in litigation concerning ownership and control and related issues. Litigation in this area—involving, at various times, OSM, State regulatory authorities (administering OSM-approved State programs), NMA, and environmental groups—has been contentious and ongoing, virtually uninterrupted, since at least 1988. The 2000 final rule, which we are proposing to revise, replaced a 1997 interim final rule (62 FR 19451), which was partially invalidated by the U.S. Court of Appeals for the District of Columbia Circuit. *National Mining Ass'n* v. *Department of the Interior,* 177 F.3d 1 (D.C. Cir. 1999) (*NMA* v. *DOI II*). The interim final rule replaced three sets of predecessor regulations dating back to 1988 and 1989 (53 FR 38868 [1988], 54 FR 8982 [1989], 54 FR 18438 [1989]), which were invalidated by the D.C. Circuit because the court found that one aspect of the rules was inconsistent with section 510(c) of the Act. *National Mining Ass'n* v. *Department of the Interior,* 105 F.3d 691 (D.C. Cir. 1997) (*NMA* v. *DOI I*). The preamble to the 2000 final rule contains a detailed discussion of the prior rules and the related litigation. *See generally* 65 FR 79582–84.

This ongoing cycle of litigation has created a great deal of regulatory uncertainty for OSM, State regulatory authorities (administering OSM-approved State programs), the regulated community, and the public in general. Thus, in an effort to introduce regulatory stability and bring the litigation between OSM and NMA to an end, we entered into negotiations with NMA in an attempt to settle NMA's challenge to the 2000 final rule. Ultimately, the parties were able to settle all of the issues presented in NMA's rule challenge. Under the terms of the settlement, we agreed to propose certain regulatory amendments ''which are the subject of this proposed rulemaking—in accordance with the

Administrative Procedure Act's standard notice and comment procedures. We did not agree to finalize any of the provisions as proposed. We also agreed to publish—in this proposed rulemaking—certain clarifications to our preamble supporting the 2000 final rule.

We are not obligated, as a result of the settlement agreement, to issue a final rule based on this proposal. We will give due consideration to any public comments received on the proposed rule before deciding whether to issue a final rule and whether to finalize any provisions as proposed. However, we do view this rulemaking effort as an opportunity to ensure that we have the tools we need to enforce SMCRA, clarify ambiguous provisions, and reduce any unnecessary reporting burdens on industry and regulatory authorities. We are hopeful that any final rule flowing from this proposal will introduce a measure of regulatory stability to an area that has been in flux since at least 1988. As stated earlier, this proposed rule does not suspend any of the provisions of the 2000 final rule.

II. Discussion of the Proposed Rule

In this section, we discuss the proposed regulatory revisions to each section of the Code of Federal Regulations (CFR). The revisions include both those we propose in accordance with our settlement with NMA as well as certain non-substantive modifications that flow logically from the settlement proposals.

At the end of this section, we include certain clarifications to the preamble to our 2000 final rule. Although these aspects of the 2000 preamble did not impose any regulatory requirements, we agreed to publish clarifications as part of our settlement with NMA. Like the corresponding preamble provisions in the 2000 final rule, the clarifications we announce today do not impose regulatory requirements. As such, we are not seeking public comments on these issues, and we do not plan to address these topics again in a final rule.

30 CFR 701.5—Definitions

Control or Controller

In the 2000 final rule, we defined *control* or *controller* in terms of certain relationships that establish control of a surface coal mining operation. We also provided examples of persons who may be, but are not necessarily, controllers. NMA challenged the definition on multiple grounds, including that the definition is vague, arbitrary and capricious, and contrary to *NMA* v. *DOI II.* Given the alleged vagueness of the definition, NMA also objected to the requirement that a permit applicant must list all of its controllers in the permit application.

In order to settle this claim, we agreed to propose removing from the definition of *control* or *controller* at 30 CFR 701.5 the following: all of paragraph (3)—general partner in a partnership; all of paragraph (4)—person who has the ability to commit financial or real property assets; from paragraph (5), the phrase ''alone or in concert with others,'' the phrase ''indirectly or directly,'' and the list of examples at paragraphs (5)(i) through (5)(vi). Both parties agreed that if the proposed revisions were finalized, the remaining portion of the definition would still allow the regulatory authority to reach any person or entity with the ''ability'' to determine the manner in which a surface coal mining operation is conducted. Both parties also agreed that standard could encompass indirect and direct control, as well as control in concert with others, where there is actual ability to control.

While we are proposing to remove from the regulatory text two categories of controllers (general partner in a partnership; person who has the ability to commit financial or real property assets), as well as the list of examples of persons who may be controllers, we stress that, under this proposal, all of these persons may still be controllers. In fact, general partners and persons who can commit assets are almost always controllers. *See, e.g., NMA* v. *DOI II,* 177 F.3d at 7. However, because these persons are already covered under the ''ability to control'' standard, we propose to remove them from the regulatory text in order to simplify the definition. Likewise, although we propose to remove the examples of controllers, these persons may still be controllers if they in fact have the ability to control a surface coal mining operation. In our experience implementing section 510(c) of the Act since 1977, the persons identified in the examples are often controllers. Therefore, our discussion of these examples in the preamble to the 2000 final rule remains instructive, though it is important to remember that these examples are not exhaustive. *See* 65 FR 79598–600.

The proposed modification of the definition of *control* or *controller* is coupled with a proposal to remove the requirement to list all controllers in a permit application under current 30 CFR 778.11. Instead, we propose that only the natural person that is expected to have the greatest level of control must be disclosed as a controller. Permit applicants will continue to be required to include in a permit application the information required to be disclosed under sections 507 and 510(c) of SMCRA. We propose this modification to the permit application information requirements in order to establish a ''bright line,'' objective standard for both applicants (who must submit certain information in a permit application) and regulatory authorities (who review applications for completeness and compliance with the Act). The ''ability to control'' standard discussed above gives regulatory authorities flexibility to consider all of the relevant facts, on a case-by-case basis, in determining whether control is present; regulatory authorities also have the leeway to follow control wherever it may exist in a series of business relationships. However, while it is important for regulatory authorities to retain this flexibility and leeway, it is difficult, or impossible, to have an objective information disclosure standard based on this type of definition. By removing the requirement for applicants to list all of their controllers in a permit application, this proposal would greatly reduce any uncertainty or subjectivity associated with the relevant permit information disclosure requirements. In sum, the proposals discussed above would give regulatory authorities the flexibility they need to enforce the Act, while simultaneously making the permit information requirements more objective.

Own, Owner, or Ownership

In its judicial challenge, NMA claimed that the definition of *own, owner,* or *ownership* at 30 CFR 701.5 in our 2000 final rule is inconsistent with SMCRA, arbitrary and capricious, and contrary to *NMA* v. *DOI II.* NMA also took issue with the ''downstream'' reach of the rule, as it pertains to ownership. The term ''downstream,'' as used by the D.C. Circuit in the *NMA* v. *DOI I* and *NMA* v. *DOI II* litigation, refers to surface coal mining operations that are down a corporate (or other business) chain from the applicant. For example, if the applicant has a subsidiary, the subsidiary would be considered ''downstream'' from the applicant; by contrast, if the applicant has a parent company, the parent company would generally be considered ''upstream'' from the applicant. NMA's claim pertained to how far downstream the regulatory authority can look when making a permit eligibility determination based on ownership (as distinct from control) of a surface coal mining operation.

In order to settle this claim, we agreed to propose revisions to the definition of *own, owner,* or *ownership* at current 30 CFR 701.5 and the provision at current 30 CFR 773.12(a)(2) that governs the downstream reach of the definition. The first revision is to the definition itself. The current definition, at 30 CFR 701.5, includes persons ''possessing or controlling in excess of 50 percent of the voting securities or other instruments of ownership of an entity.'' This definition could be confusing in that it uses the word ''controlling,'' which is a separately defined term. In order to remove any potential confusion, we propose to add the term ''owning of record'' in place of ''possessing or controlling.'' The term ''owning of record'' is a variant of ''owners of record,'' which is found in section 507(b) of the Act. Thus, regulatory authorities and the regulated industry will be familiar with the term and its meaning. This proposed revision would not change the substance of the definition of *own, owner,* or *ownership.*

The second proposed revision is at current 30 CFR 773.12(a)(2), which addresses the downstream reach of the rule. In *NMA* v. *DOI II,* the U.S. Court of Appeals for the Federal Circuit clearly held that we can deny a permit based on limitless ''downstream'' *control* relationships. *NMA* v. *DOI II,* 177 F.3d at 4–5. That is, if the applicant indirectly controls an operation with a violation, through its ownership or control of intermediary entities, it is not eligible for a permit. *Id.* at 5. The operation with a violation can be limitlessly downstream from the applicant. While we believe the court's logic arguably extends to ownership, the *NMA* v. *DOI II* decision is not entirely clear on this point.

At present, the 2000 final rule allows us to reach downstream with regard to both ownership and control. Thus, under the current rule, we can deny a permit if the applicant indirectly *owns* an operation in violation of SMCRA or other applicable laws. The operation in violation can be infinitely downstream from the applicant—meaning that ownership of the operation can be indirect, through intermediary entities—as long as there is an uninterrupted chain of ownership between the applicant and the operation. NMA argued that this provision is contrary to the plain meaning of SMCRA and violates principles of corporate law. NMA claimed that ownership of a corporation does not equate to ownership of the corporation's assets (including mining operations). Thus, according to NMA, we should only be able to block a permit based on ownership if one of the applicant's own operations has a violation.

While we do not necessarily agree with NMA's analysis, in order to settle this claim, we agreed to propose a regulatory revision at 30 CFR 773.12(a), the effect of which would be to limit the reach of permit blocking based on ownership to ''one level down'' from the applicant. For example, if an applicant *directly* owns an entity with an unabated or uncorrected violation of SMCRA or other applicable laws—meaning there are no intermediary entities between the applicant and the entity with a violation—the applicant would not be eligible for a permit. In other words, the rule would reach one level down from the applicant to the entity the applicant owns. However, if the applicant *indirectly* owns an entity with a violation—meaning that there is at least one intermediary entity between the applicant and the entity with a violation—the applicant would not be ineligible for a permit based on ownership of a violator entity. Of course, the same applicant would be ineligible for a permit if it controlled the violator entity.

While we do not believe this approach is compelled by SMCRA or the decision in *NMA* v. *DOI II,* it is a reasonable interpretation of the Act. Moreover, as it pertains to control, the rule will continue to reach limitlessly ''downstream.'' That is, in determining an applicant's eligibility for a permit, we may continue to consider violations at ''downstream'' operations, as long as there is control by the applicant. Because we can still deny a permit based on indirect *control* of an operation with a violation, through intermediary entities, the proposed modification to the downstream reach of *ownership* will not impair our ability to adequately enforce section 510(c) of the Act.

The proposed revision at 30 CFR 773.12(a) that pertains to the downstream reach of the definition of *own, owner,* or *ownership* is further discussed below in 30 CFR 773.12.

30 CFR 773.8—General Provisions for Review of Permit Application Information and Entry of Information Into AVS

We propose to revise current 30 CFR 773.8 by removing the phrase ''ownership and control'' from paragraph (b)(1). The proposed revision at (b)(1) would read: ''We will enter into AVS the information you submit under §§ 778.11 and 778.12(c) of this subchapter.'' We note that this proposed revision would require regulatory authorities to enter into AVS one piece of information that they typically have not loaded into the system in the past: the identity of the person(s) responsible for submitting the Coal Reclamation Fee Report (Form OSM–1) and for remitting the reclamation fee payment to OSM. *See* current 30 CFR 778.11(a)(4). With this one minor exception, this is a non-substantive proposed revision that flows logically from our proposed revision to 30 CFR 778.11, discussed below.

30 CFR 773.9—Review of Applicant, Operator, and Ownership and Control Information

We propose to revise 30 CFR 773.9 by removing the phrase ''applicant, operator, and ownership and control'' where it occurs in paragraph (a). Revised paragraph (a) would read: ''We, the regulatory authority, will rely upon the information that you, the applicant, submit under § 778.11 of this subchapter, information from AVS, and any other available information, to review your and your operator's business structure and ownership or control relationships.'' This non-substantive proposed revision flows logically from our proposed revision to 30 CFR 778.11, discussed below.

30 CFR 773.10—Review of Permit History

We propose to revise sections 30 CFR 773.10(b) and (c). In paragraph (b), we would remove the phrase ''any of your controllers disclosed under §§ 778.11(c)(5) and 778.11(d)'' and replace it with the phrase ''your designated controller disclosed under § 778.11(d).'' Paragraph (b) would then read: ''We will also determine if you, your operator, or your designated controller disclosed under § 778.11(d) of this subchapter have previous mining experience.'' In paragraph (c), we would remove the language ''your controllers, or your operator's controllers'' from the first sentence and replace it with ''or your designated controller.'' In the second sentence of paragraph (c), we would remove ''and was not disclosed under § 778.11(c)(5) of this subchapter.'' Paragraph (c) would then read: ''If you, your operator, or your designated controller do not have any previous mining experience, we may conduct additional reviews under § 774.11(f) of this subchapter. The purpose of this review will be to determine if someone else with mining experience controls the mining operation.'' These proposed revisions flow logically from our proposed revision to 30 CFR 778.11, discussed below.

30 CFR 773.12—Permit Eligibility Determinations

As indicated above, under our discussion of the definition of *own, owner,* or *ownership,* we also propose to revise 30 CFR 773.12(a), the provision in the 2000 final rule that affects the ''downstream'' reach of the rule. Specifically, we propose to revise paragraph (a)(2) so that we can no longer deny a permit based on indirect *ownership* of a surface coal mining operation with a violation; but we would retain the right to deny a permit based on indirect *control.* In order to simplify the rule, we also propose to merge paragraphs (a)(2) and (a)(3). The proposed revision to paragraph (a)(2), which would remove references to ownership, would provide that you, a permit applicant, are not eligible for a permit if any surface coal mining operation that ''You or your operator indirectly control has an unabated or uncorrected violation and your control was established or the violation was cited after November 2, 1988.'' Thus, as explained above, with regard to ownership, we could only look ''one level down'' from the applicant in making a permit eligibility determination.

We are also proposing to revise 30 CFR 773.12(b). Consistent with the D.C. Circuit's ruling on retroactivity in *NMA* v. *DOI II,* 30 CFR 773.12(b) of our 2000 final rule provides that an applicant is eligible to receive a permit, notwithstanding the fact that the applicant or the applicant's operator indirectly owns or controls an operation with an unabated or uncorrected violation, if both the violation and the assumption of ownership or control occurred before November 2, 1988. However, 30 CFR 773.12(b) also provides that the applicant is *not* eligible to receive a permit under this provision if there ''was an established legal basis, independent of authority under section 510(c) of the Act, to deny the permit * * *.'' NMA challenged 30 CFR 773.12(b), claiming that if there is an ''independent authority'' to deny the permit, that authority exists whether or not it is referenced in the regulatory language. According to NMA, the provision is superfluous and potentially confusing. We agree that any ''independent authority'' exists independent of this regulatory provision. Thus, in order to settle this claim, we propose to remove 30 CFR 773.12(b). Because we propose to remove 30 CFR 773.12(b), we also propose to redesignate paragraphs (c), (d), and (e) as (b), (c), and (d), respectively.

30 CFR 773.14—Eligibility for Provisionally Issued Permits

Section 773.14 of our 2000 final rule allows for the issuance of a provisionally issued permit if the applicant meets the criteria under 30 CFR 773.14(b). The promulgated regulatory language uses the word ''*may,*'' which indicates that the regulatory authority retains discretion to grant a provisionally issued permit, even if the applicant otherwise meets the eligibility criteria at 30 CFR 773.14(b). While our preamble discussion is not explicit on this point, we intended in this context that an applicant *is* eligible to receive a provisionally issued permit under the specified circumstances. *See, e.g.*, 65 FR 79618–19, 79622–24, 79632, 79634–35, and 79638.

In order to reconcile any ambiguity, and to settle a claim brought by NMA, today we propose to amend our rule language at 30 CFR 773.14(b) to clarify that an applicant who meets the 30 CFR 773.14(b) eligibility criteria will be eligible for a provisionally issued permit. We stress that an applicant must also meet all other permit application approval and issuance requirements before receiving a provisionally issued permit and that the provisional permittee must comply with all performance standards. *See generally* 65 FR 79622.

30 CFR 773.21—Initial Review and Finding Requirements for Improvidently Issued Permits

Sections 773.21 through 773.23 of our 2000 final rule set forth provisions relating to ''improvidently issues permits,'' which are, in this context, permits that we should not have issued in the first instance because of the applicant's ownership or control of a surface coal mining operation with a violation. We propose two substantive revisions to 30 CFR 773.21(c).

The first revision relates to our burden of proof in making a preliminary finding that a permit was improvidently issued. This proposed revision would clarify that a preliminary finding of improvident issuance ''must be based on reliable, credible, and substantial evidence and establish a *prima facie* case that [the] permit was improvidently issued.'' This proposed revision flows from the related proposed revisions to 30 CFR 773.27(a), which is discussed in more detail below.

We also propose to remove current 30 CFR 773.21(c)(2), which requires us to post notices of our *preliminary* findings of improvident permit issuance at our office closest to the permit area and on the Internet. This proposed revision is similar to one of our proposed revisions to 30 CFR 843.21; our rationale for removing these and similar posting requirements is set forth more fully under the discussion of 30 CFR 843.21, below.

30 CFR 773.22—Notice Requirements for Improvidently Issued Permits

We propose to remove current 30 CFR 773.22(d), which contains similar posting requirements to those found at current 30 CFR 773.21(c)(2), discussed above. Specifically, we propose to remove the requirement to post a notice of *proposed* suspension or rescission at our office closest to the permit area and on the Internet. Our rationale for removing these and similar posting requirements is set forth under the discussion of 30 CFR 843.21, below. Because we propose to remove paragraph (d), we further propose to redesignate current paragraphs (e) through (h) accordingly.

30 CFR 773.23—Suspension or Rescission Requirements for Improvidently Issued Permits

We propose to revise the posting requirements contained in current 30 CFR 773.23. Current 30 CFR 773.23(c)(2) requires us to post a *final* notice of permit suspension or rescission (which requires the holder of the improvidently issued permit to cease all surface coal mining operations on the permit) at our office closest to the permit area and on the Internet. As with the proposed revisions to sections 30 CFR 773.21 and 773.22, we propose to remove the requirement to post the final notices on the Internet. However, because this section pertains to *final* findings (as opposed to the *preliminary* and *proposed* findings under sections 30 CFR 773.21 and 773.22, respectively), we propose to retain the requirement to post the final notice at our office closest to the permit area. It is appropriate to post notices of such final actions for public view. Our rationale for revising these and similar posting requirements is set forth more fully under the discussion of 30 CFR 843.21, below.

30 CFR 773.26—How to Challenge an Ownership or Control Listing or Finding

Sections 773.25 through 773.28 of our 2000 final rule set forth provisions for challenging ownership or control listing or findings. Generally speaking, an ownership or control *listing* arises when a permit applicant identifies, or ''lists,'' a person as an owner or controller in a permit application. That information is, in turn, entered into the AVS by the regulatory authority. By contrast, an

ownership or control *finding* under 30 CFR 774.11(f) constitutes a regulatory authority's fact-specific determination that a person owns or controls a surface coal mining operation.

In its judicial challenge to our 2000 final rule, NMA claimed that 30 CFR 773.26(a) is confusing. That section explains how and where a person may challenge an ownership or control listing or finding. NMA claimed that the provision does not clearly delineate the appropriate forum in which to bring a challenge. Also, NMA was concerned that the provision seems to refer only to applicants and permittees, but not other persons who are identified in the AVS as owners or controllers.

Section 773.25 of the 2000 final rule provides that any person listed in a permit application or in the AVS as an owner or controller, or found by a regulatory authority to be an owner or controller, may challenge the listing or finding. As we explained in the preamble, our intent was, in fact, to allow any person listed in a permit application or in the AVS, or found to be an owner or controller, to initiate a challenge at *any* time, regardless of whether there is a pending permit application (or issued permit). *See* 65 FR 79631. Section 773.26(a) was not intended to limit in any way the universe of persons who may avail themselves of the challenge procedures under 30 CFR 773.25; rather, it merely specifies the procedure and forum in which to challenge an ownership or control listing or finding.

Nonetheless, in order to provide greater clarity and to settle NMA's claim, today we propose to amend our regulations at 30 CFR 773.26(a) to specify more clearly the forum in which to initiate an ownership or control challenge. The proposed revision specifies that challenges pertaining to a pending permit application are to be submitted to the regulatory authority with jurisdiction over the permit application. All other challenges concerning ownership or control of a surface coal mining operation are to be submitted to the regulatory authority with jurisdiction over that surface coal mining operation.

We note that, in meeting its obligations under section 510(c) of the Act and the State counterparts to that provision, each State, when it receives a permit application, must apply its own ownership and control rules to determine whether the applicant owns or controls any surface coal mining operations with violations. *See generally* 65 FR 79637. Further, we stress that an ownership or control decision by one State is not necessarily binding on any other State. This provision comports with principles of State primacy, and recognizes that not all States will have identical ownership and control rules.

We also propose to add new 30 CFR 773.26(e) in partial satisfaction of our settlement with NMA concerning the relative burdens of proof in ownership or control challenges. This new provision would allow a person who is unsure why he or she is shown in the AVS as an owner or controller of a surface coal mining operation to request an explanation from our AVS Office. The new provision would require us to respond to such a request within 14 days. Our response would be informal and would set forth in simple terms why the person is shown in AVS. In most, if not all, cases, the explanation would be as simple as specifying that the person was found to be an owner or controller under 30 CFR 774.11(f) (of which the person should already be aware due to that section's written notice requirement) or was listed as an owner or controller in a permit application. Understanding the basis for being shown in the AVS will give persons a better sense of the type of evidence they will need to introduce in an ownership or control challenge.

30 CFR 773.27—Burden of Proof for Ownership or Control Challenges

As mentioned above, our 2000 final rule contains provisions for challenging ownership or control listings or findings. A successful challenger must prove by a preponderance of the evidence that he or she is not, or was not, an owner or controller. In its judicial challenge, NMA argued that the rule should be amended so that we must first demonstrate at least a *prima facie* case so that the challenger can know what evidence he or she must rebut. The preamble to our 2000 final rule already states:

> [I]n making a finding under final § 774.11(f), the regulatory authority must indeed make a *prima facie* determination of ownership and control, based on the evidence available to the regulatory authority. In making a *prima facie* determination, the finding should include evidence of facts which demonstrate that the person subject to the finding meets the definition of *own*, *owner*, or *ownership* or *control* or *controller* in § 701.5.
> 65 FR 79640.

Nonetheless, in order to set forth more clearly the relative burdens of the parties, we agreed to propose regulatory revisions to sections 30 CFR 773.27(a) and 774.11(f), as well as a related change to 30 CFR 773.21(c), discussed above. We also agreed to propose a new 30 CFR 773.26(e), discussed above. The proposed revision to 30 CFR 774.11(f), discussed further under the proposed revisions to 30 CFR 774.11, below, clarifies that a regulatory authority's finding of ownership or control must be based on reliable, credible, and substantial evidence and establish a *prima facie* case of ownership or control. The proposed revision to 30 CFR 773.27(a) merely clarifies that a person can challenge either an ownership or control listing or a *prima facie* finding of ownership or control under 30 CFR 774.11(f).

If the challenge concerns a finding of ownership or control, the regulatory authority bears the initial burden of establishing a *prima facie* case of ownership or control based on reliable, credible, and substantial evidence. (In this context, a *prima facie* case is one consisting of sufficient evidence to establish the elements of ownership or control and that would entitle the regulatory authority to prevail unless the evidence is overcome by other evidence.) If the challenge concerns an ownership or control listing, the regulatory authority's initial burden is substantially lower: the regulatory authority must specify only the circumstances of the listing, such as who listed the person, the date of the listing, and in what capacity the person was listed. In either type of challenge, after the regulatory authority meets its initial burden, the burden shifts to the challenger to prove, by a preponderance of the evidence, that he or she does not, or did not, own or control the relevant surface coal mining operation. The challenger bears the ultimate burden of persuasion.

30 CFR 773.28—Written Agency Decision on Challenges to Ownership or Control Listings or Findings

We propose to revise the posting requirements contained in current 30 CFR 773.28. Current 30 CFR 773.28(d) requires us to post final decisions on ownership and control challenges on the AVS and on the Internet. We propose to remove the requirement to post these decisions on the Internet. However, because this section pertains to final decisions on ownership or control challenges, we propose to retain the requirement to post these decision on the AVS. Because these final findings may have permit eligibility consequences, it is appropriate to make such findings publicly available by posting them on the AVS. Our rationale for revising these and similar posting requirements is set forth more fully under the discussion of 30 CFR 843.21, below.

30 CFR 774.11—Post-permit Issuance Requirements for Regulatory Authorities and Other Actions Based on Ownership, Control, and Violation Information

We propose several revisions to 30 CFR 774.11 of our 2000 final rule, which contains, among other things, requirements for regulatory authorities after a permit is issued. The first proposed revision is to current 30 CFR 774.11(a)(3), which requires the regulatory authority to enter into AVS all ''[c]hanges of ownership or control within 30 days after receiving notice of a change.'' We propose to revise 30 CFR 774.11(a)(3) by removing ''Changes of ownership or control'' and replacing it with ''Changes to information initially required to be provided by the applicant under 30 CFR 778.11.'' This proposed change flows from the proposed revision to 30 CFR 778.11, discussed under 30 CFR 701.5 (definition of *control* or *controller*), above, and under 30 CFR 778.11, below.

The second proposed revision is to current 30 CFR 774.11(e). Under the specified circumstances, 30 CFR 774.11(c) of our 2000 final rule requires us to make a preliminary finding of permanent permit ineligibility. Section 30 CFR 774.11(d) provides for administrative review of the preliminary finding. Section 30 CFR 774.11(e), as promulgated, reads as follows: ''We must enter the results of the finding and any hearing into AVS.'' Confusion has arisen as to whether a preliminary finding must be entered into AVS before administrative resolution.

To settle a claim brought by NMA, we today clarify that a finding of permanent permit ineligibility may only be entered into AVS if it is affirmed on administrative review or if the person subject to the finding does not seek administrative review and the time for seeking administrative review has expired. We propose to revise 30 CFR 774.11(e) to effectuate this clarification. At paragraph (e), we propose to create a subheading ''Entry into AVS.'' Revised paragraph (e)(1) would then read, ''If you do not request a hearing, and the time for seeking a hearing has expired, we will enter our finding into AVS.'' Revised paragraph (e)(2) would read, ''If you request a hearing, we will enter our finding into AVS only if that finding is upheld by the Office of Hearings and Appeals.''

The next proposed revision relates to a regulatory authority's finding of ownership or control. As explained above, under the discussion of the burden of proof provisions in 30 CFR 773.27, we propose to revise 30 CFR 774.11(f) to clarify that a regulatory authority's written finding of ownership or control must be based on reliable, credible, and substantial evidence and establish a *prima facie* case of ownership or control. The written finding requirement is found at current 774.11(f)(1); we propose to incorporate the requirement into revised 30 CFR 774.11(f). In the preamble to our 2000 final rule, we already explained that a finding of ownership or control must be based on a *prima facie* determination of ownership or control (65 FR 79640); the proposed revision makes this requirement explicit. The proposed revision would add the requirement that a finding of ownership or control must be based on reliable, credible, and substantial evidence.

Another proposed revision to 30 CFR 774.11 concerns NMA's claim that our 2000 final rule denies a person the right to challenge a decision to ''link'' it by ownership or control to a violation before the link is entered into AVS, which is an ''automated information system of applicant, permittee, operator, violation and related data OSM maintains to assist in implementing the Act.'' 30 CFR 701.5. In order to settle this claim, we agreed to propose a new paragraph (g) at 30 CFR 774.11 and related regulatory revisions.

The new paragraph (g) would provide that after we make a finding of ownership or control under 30 CFR 774.11(f), and before we enter the finding into AVS, we will allow the person subject to the finding 30 days in which to submit information tending to demonstrate a lack of ownership or control. After reviewing any information submitted, if we are persuaded that the person is not an owner or controller, we will serve the person with a written notice to that effect; if we still find the person to be an owner or controller, we will enter the finding into AVS and require the person to satisfy the requirements of 30 CFR 778.11(d), if appropriate. The latter two requirements—entry of the decision into AVS and compliance with 30 CFR 778.11(d)—are found, in substance, at 30 CFR 774.11(f)(2) and (f)(3); we propose to incorporate them into proposed sections 30 CFR 774.11(g)(1) and (g)(2). The process envisioned in proposed paragraph (g) will be informal and non-adjudicatory.

Finally, we propose to add new paragraph (h). This new paragraph would provide that we do not need to make a finding of ownership or control before entering into AVS the information that permit applicants are required to disclose under sections 30 CFR 778.11(b) and (c). For example, if we find that an applicant failed to disclose the operator in a permit application, we can enter the operator into AVS without making a finding of ownership or control. This is so because the applicant is required to identify the operator under section 507(b)(1) of the Act, 30 U.S.C. 1257(b)(1), and under 30 CFR 778.11(b)(3). However, proposed paragraph (h) would also make clear that the *mere listing* of a person in the AVS pursuant to 30 CFR 778.11(b) or (c) does not create a presumption or constitute a determination that such person owns or controls a surface coal mining operation. Of course, some of the persons required to be disclosed under sections 30 CFR 778.11(b) and (c) *will* be owners or controllers, but that is because they meet the definition of *own, owner,* or *ownership* or *control* or *controller* at 30 CFR 701.5, not because they are listed in AVS. We propose to make non-substantive revisions to current paragraph (g) and redesignate that provision as paragraph (i).

30 CFR 778.11—Providing Applicant, Operator, and Ownership and Control Information

We are proposing several revisions in 30 CFR 778.11. First, we propose to remove the term ''ownership and control'' from the heading of the section. Thus, the heading for 30 CFR 778.11 would be revised to read ''Providing applicant and operator information.'' We are proposing this revision largely because we are also proposing to remove current 30 CFR 778.11(c)(5), which requires an applicant to disclose all of its owners and controllers in a permit application (*see* discussions under 30 CFR 701.5, definition of *control* or *controller,* and below). As a result of this change, together with the proposed revisions discussed below, revised 30 CFR 778.11 would comport more closely with certain of the permit information requirements contained in section 507(b) of the Act. 30 U.S.C. 1257(b). While some of the persons identified in revised 30 CFR 778.11 will in fact be owners or controllers, we believe the broad term ''applicant and operator information'' more aptly describes the range of information an applicant would be required to disclose under revised 30 CFR 778.11.

Current 30 CFR 778.11(a)(1) requires an applicant to identify whether it and its operator are ''corporations, partnerships, sole proprietorships, or other business entities.'' We propose to add ''associations'' to this list of business entities to conform the provision more closely to section 507(b)(4) of the Act. Similarly, an applicant must provide certain information for the persons identified in

30 CFR 778.11(c). We propose to add ''partner'' to this list of persons. We also propose to redesignate current 30 CFR 778.11(c)(4) as 30 CFR 778.11(c)(5) and revise it to read ''Person who owns 10 percent or more of the applicant or the operator.'' These changes likewise comport with section 507(b)(4) of the Act.

As we explain under the discussion of 30 CFR 701.5, above, in conjunction with revising the definition of *control* or *controller,* we propose to remove the requirement at 30 CFR 778.11(c)(5), which requires an applicant to identify all of its owners or controllers in a permit application. We propose this revision because we believe it is important to establish ''bright line,'' objective permit information requirements. Since we propose to retain a definition of control that vests regulatory authorities with discretion to make fact-specific findings of control on a case-by-case basis, it is difficult, or impossible, to have an objective reporting requirement based on that definition. Even though we propose to remove this reporting requirement, we are confident that the disclosure requirements at sections 507(b) and 510(c) of the Act will give regulatory authorities all the information they need to enforce section 510(c). Further, we note that this information is not required to be disclosed under the Act. We have submitted a request to the Office of Management and Budget that modifies the information collection requirements for Part 778 to reflect this proposed change.

Finally, in litigation concerning our 2000 final rule, NMA challenged 30 CFR 778.11(d). This section provides that ''[t]he natural person with the greatest level of effective control over the entire proposed surface coal mining operation must submit a certification, under oath, that he or she controls the proposed surface coal mining operation.'' NMA challenged the provision on procedural and substantive grounds, claiming, among other things, that it is vague and raises self-incrimination concerns. In order to settle this claim, we propose to revise the regulatory language at 30 CFR 778.11(d) to clarify the applicability and scope of the provision.

Particularly, we are proposing that a permit applicant must designate the natural person expected to have the greatest level of control over the entire proposed surface coal mining operation. That person would, in turn, sign the permit application, thereby acknowledging the designation. The proposed amendment would also clarify that a designation will not, by itself, be sufficient evidence on which to base the imposition of an individual civil penalty under sections 30 CFR 724.12 or 846.12 or an alternative enforcement action under sections 30 CFR 847.11 or 847.16. However, if the operation that the designated person controls has an unabated or uncorrected violation, the designated person would not be eligible to receive a permit under 30 CFR 773.12 or section 510(c) of SMCRA, unless he successfully challenges his control of the operation under sections 30 CFR 773.25 through 773.28. *See, e.g.*, 65 FR 79631 (explaining that even persons who must currently certify as to their control can, in effect, ''de-certify'' if they can demonstrate changed circumstances).

30 CFR 843.21—Procedures for Improvidently Issued State Permits

Section 843.21 of our 2000 final rule revised the procedures governing State permits that have been improvidently issued based on ownership or control relationships. This section provides for direct Federal enforcement, including notices of violation and cessation orders, if a State fails to take appropriate action. NMA objected to a provision that requires Internet posting of our initial notice that we have reason to believe a State permit may have been improvidently issued. In order to settle this claim, we agreed to propose a regulatory revision at paragraph (a), but we did not agree to remove the Internet posting requirement. The revision at paragraph (a) would provide that the initial notice must be based upon reliable and credible information. Since a finding of improvident issuance can have potentially serious ramifications, it is only fair that the initial notice be based on reliable and credible information.

Upon further consideration, we propose to remove all Internet posting requirements found in the 2000 final rule. These Internet posting requirements can be found at current sections 30 CFR 773.21(c)(2), 773.22(d), 773.23(c)(2), 773.28(d), 843.21(a)(2), 843.21(c)(2), and 843.21(d). We also propose to remove the requirement to post certain *preliminary* decisions ''at our office closest to the permit area.'' These posting requirements are found at current sections 30 CFR 773.21(c)(2), 773.22(d), 843.21(a)(2), and 843.21(c)(2). We propose to retain the requirement to post certain *final* decisions at our office closest to the permit area (or, in one instance, on AVS). These final decision posting requirements are found at proposed sections 30 CFR 773.23(c)(2), 773.28(d), and 843.21(d).

Our inclusion of the Internet posting requirements in the first instance was primarily based on comments that we should expand the public's access to our decisions. *See, e.g.*, 65 FR 79632. While public access to final decisions remains important, we have come to believe that the various Internet posting requirements in the 2000 final rule could be unduly burdensome to regulatory authorities, especially when public notice of final decisions can be accomplished by the less burdensome, conventional method of posting them at our office closest to the permit area. Further, regulatory authorities are already required to enter much of the relevant information into AVS, which is available to the public. Posting *preliminary* findings by any method could likewise become unduly burdensome; further, posting of preliminary findings is of questionable value to the public. For these reasons, we propose to remove all Internet and *preliminary* finding posting requirements, but retain public posting of our final decisions. In terms of information collection burdens on regulatory authorities, we note that we have not yet required the States to implement these posting requirements. Thus, because we propose to eliminate an information collection that never took effect for the States, there is no net change to the information collection burden.

30 CFR 847.11—Criminal Penalties

30 CFR 847.16—Civil Actions for Relief

During the course of litigation over our 2000 final rule, NMA claimed that certain of the rule's ''alternative enforcement'' provisions unlawfully abrogate State prosecutorial discretion by making it mandatory for States to seek criminal penalties or institute civil actions for relief upon the occurrence of certain specified conditions. *See* sections 30 CFR 847.11 (criminal penalties), 847.16 (civil actions for relief), and 847.2(c) (requiring State regulatory programs to include criminal penalty and civil action provisions that are no less stringent than the Federal requirements). Upon further reflection, we agree that the regulatory authority—Federal or State—should retain the discretion to evaluate the severity of a violation and ultimately to determine whether referral for alternative enforcement is warranted. As such, and in order to settle NMA's claim, we propose to amend our regulations at sections 30 CFR 847.11 and 847.16 to remove the mandatory nature of referrals for alternative enforcement. We propose to accomplish this by changing the word ''will'' to ''may'' in the operative provisions to underscore that

a regulatory authority ''may,'' but is not obligated to, refer a particular matter for alternative enforcement.

Clarifications to the Preamble to Our 2000 Final Ownership and Control Rule

As explained above, as part of our settlement with NMA, we agreed to publish certain clarifications to the preamble supporting our 2000 final rule. Like the corresponding preamble provisions in our 2000 final rule, the clarifications we announce today do not impose regulatory requirements. As such, we are not seeking public comments on these issues, and we do not plan to address these topics again in a final rule.

1. In *NMA* v. *DOI I,* the court of appeals explained that, as a general rule, we may not deny a permit based on violations of persons who own or control the applicant (so-called ''upstream'' owners and controllers). However, the court explained: ''OSM has leeway in determining who the applicant is. As [NMA] concedes, OSM has the authority, in instances where there is subterfuge, to pierce the corporate veil in order to identify the real applicant.'' *NMA* v. *DOI I,* 105 F.3d at 695. Thus, the court held, ''once OSM has determined that it has the true applicant before it, OSM's power is constrained by the specific statutory language of section 510(c)—only those violations of operations owned or controlled by the applicant are relevant.'' *Id.*

At 65 FR 79609 through 79611 of the preamble of our 2000 final ownership and control rule, there is substantial discussion of the ''true applicant'' concept and a related discussion of corporate veil-piercing. In that portion of the 2000 final rule's preamble, our intent was to explain why we chose not to define the term ''true applicant,'' as well as to identify a non-exclusive list of theories that may be available to a regulatory authority in attempting to ascertain the identity of the true applicant. This general preamble language was not intended to impose any regulatory requirement on regulatory authorities.

Nonetheless, confusion has arisen as to whether we are directing State regulatory authorities, via preamble language, to use any of the identified theories to identify the true applicant. To settle a claim brought by NMA in its judicial challenge to our 2000 final rule, we today clarify that we are not directing State regulatory authorities to use any of the three identified tools, or any other particular means, in ascertaining whether the nominal permit applicant is also the true applicant. Should a State attempt to pierce a corporate veil or otherwise ascertain the identity of the true applicant, it is for the State to decide which legal authorities it can and will advance. Ultimately, however, each permitting authority—whether State or Federal—must be satisfied that it indeed has the ''true applicant before it.'' *NMA* v. *DOI I,* 105 F.3d at 695. As we stated in the preamble of the 2000 final rule:

> In most cases, the nominal applicant (the person whose name appears on the permit application) will also be the true applicant. * * * However, if the regulatory authority has reason to believe that the nominal applicant is not the true applicant, the regulatory [authority] should conduct an investigation to determine the identity of the true applicant. In short, each regulatory authority should consider the totality of circumstances in determining whether the nominal applicant is also the true applicant.

65 FR 79610–11.

2. Section 773.12 of our 2000 final rule requires regulatory authorities to determine whether permit applicants are eligible to receive a permit under section 510(c) of SMCRA, based on certain ownership or control relationships. At 65 FR page 79616 of the preamble, in response to public comments, we explained that permit revisions and renewals are not necessarily exempt from the requirements of section 510(c) of SMCRA. Specifically, we stated that regulatory authorities may evaluate all permitting actions, including revisions and renewals, for eligibility under section 510(c). Confusion has arisen as to whether we are directing States to conduct a section 510(c) permit eligibility review for permit revisions and renewals.

To settle a claim brought by NMA, today we clarify that we are not requiring States to conduct such a review for permit renewals and revisions other than transfers, assignments, or sales of permit rights under 30 CFR 774.17. However, in our view, States retain the discretion to require section 510(c) reviews for any revision or renewal. Nonetheless, we do not believe a section 510(c) review is necessarily warranted when a regulatory authority orders a revision under 30 CFR 774.10. In that circumstance, we believe that it would make little sense to conduct a section 510(c) review if such a review would preclude the permittee from correcting the problem that resulted in issuance of the revision order. Other than the clarification we announce today, the 2000 final rule's preamble discussion on this topic, including the legal rationale supporting our position, remains in force.

III. Public Comment Procedures

Electronic or Written Comments: If you submit written comments, they should be specific, confined to issues pertinent to the proposed rule, and explain the reason for any recommended change(s). We appreciate any and all comments, but those most useful and likely to influence decisions on a final rule will be those that either involve personal experience or include citations to and analyses of SMCRA, its legislative history, its implementing regulations, case law, other pertinent State or Federal laws or regulations, technical literature, or other relevant publications.

Except for comments provided in an electronic format, you should submit three copies of your comments if practicable. We will not consider anonymous comments. Comments received after the close of the comment period (*see* **DATES**) or at locations other than those listed above (*see* **ADDRESSES**) will not be considered or included in the Administrative Record.

Availability of Comments: Our practice is to make comments, including names and home addresses of respondents, available for public review during regular business hours at the OSM Administrative Record Room (*see* **ADDRESSES**). Individual respondents may request that we withhold their home address from the rulemaking record. We will honor this request to the extent allowable by law. There also may be circumstances in which we would withhold from the rulemaking record a respondent's identity, to the extent allowed by law. If you wish us to withhold your name and/or address, you must state this prominently at the beginning of your comment. We will make all submissions from organizations or businesses, and from individuals identifying themselves as representatives or officials of organizations or businesses, available for public inspection in their entirety.

Public hearings: We will hold a public hearing on the proposed rule upon request only. The time, date, and address for any hearing will be announced in the **Federal Register** at least 7 days prior to the hearing.

Any person interested in participating in a hearing should inform Mr. Earl Bandy (*see* **FOR FURTHER INFORMATION CONTACT**), either orally or in writing by 5 p.m., Eastern time, on January 20, 2004. If no one has contacted Mr. Bandy to express an interest in participating in a hearing by that date, a hearing will not be held. If only one person expresses an interest, a public meeting rather than a

hearing may be held, with the results included in the Administrative Record.

The public hearing will continue on the specified date until all persons scheduled to speak have been heard. If you are in the audience and have not been scheduled to speak and wish to do so, you will be allowed to speak after those who have been scheduled. We will end the hearing after all persons scheduled to speak and persons present in the audience who wish to speak have been heard. To assist the transcriber and ensure an accurate record, we request, if possible, that each person who speaks at a public hearing provide us with a written copy of his or her testimony.

Public meeting: If there is only limited interest in a hearing at a particular location, a public meeting, rather than a public hearing, may be held. Persons wishing to meet with us to discuss the proposed rule may request a meeting by contacting the person listed under **FOR FURTHER INFORMATION CONTACT**. All meetings will be open to the public and, if possible, notice of the meetings will be posted at the appropriate locations listed under **ADDRESSES.** A written summary of each public meeting will be made a part of the administrative record of this rulemaking.

IV. Procedural Determinations

Executive Order 12866—Regulatory Planning and Review

This document is not a significant rule and is not subject to review by the Office of Management and Budget under Executive Order 12866.

a. This rule will not have an effect of $100 million or more on the economy. It will not adversely affect in a material way the economy, productivity, competition, jobs, the environment, public health or safety, or State, local, or Tribal governments or communities. The revisions to the provisions governing the section 510(c) review required by SMCRA and related provisions will not have an adverse economic impact on the coal industry or State regulatory authorities. It may in fact reduce expenses for the coal industry and States by reducing the reporting and posting requirements contained in our existing regulations.

b. This rule will not create a serious inconsistency or otherwise interfere with an action taken or planned by another agency.

c. This rule does not alter the budgetary effects of entitlements, grants, user fees, or loan programs or the rights or obligations of their recipients.

d. This rule does not raise novel legal or policy issues.

Regulatory Flexibility Act

The Department of the Interior certifies that this rule will not have a significant economic impact on a substantial number of small entities under the Regulatory Flexibility Act (5 U.S.C. 601 *et seq.*). As previously stated, the revisions to the existing provisions may reduce the cost of doing business for the regulated industry and State regulatory authorities. Further, the rule produces no adverse effects on competition, employment, investment, productivity, innovation, or the ability of United States enterprises to compete with foreign-based enterprises in domestic or export markets.

Small Business Regulatory Enforcement Fairness Act

For the reasons previously stated, this rule is not a major rule under 5 U.S.C. 804(2), the Small Business Regulatory Enforcement Fairness Act. This rule:

a. Does not have an annual effect on the economy of $100 million or more.

b. Will not cause a major increase in costs or prices for consumers, individual industries, Federal, State, or local government agencies, or geographic regions.

c. Does not have significant adverse effects on competition, employment, investment, productivity, innovation, or the ability of U.S.-based enterprises to compete with foreign-based enterprises for the reasons stated above.

Unfunded Mandates

This rule does not impose an unfunded mandate on State, local, or Tribal governments or the private sector of more than $100 million per year. The rule does not have a significant or unique effect on State, Tribal, or local governments or the private sector. A statement containing the information required by the Unfunded Mandates Reform Act (2 U.S.C. 1501 *et seq.*) is not required.

Executive Order 12630—Takings

In accordance with Executive Order 12630, the rule does not have significant takings implications. The revisions being proposed are procedural in nature and do not affect the use or value of private property.

Executive Order 12988—Civil Justice Reform

In accordance with Executive Order 12988, the Office of the Solicitor has determined that this rule does not unduly burden the judicial system and meets the requirements of sections 3(a) and 3(b)(2) of the Order.

Executive Order 13132—Federalism

In accordance with Executive Order 13132, the rule does not have significant Federalism implications to warrant the preparation of a Federalism Assessment for the reasons discussed above.

Executive Order 13175—Consultation and Coordination With Indian Tribal Governments

In accordance with Executive Order 13175, we have evaluated the potential effects of this rule on Federally-recognized Indian tribes and have determined that the proposed revisions pertaining to section 510(c) reviews required by SMCRA and related provisions would not have substantial direct effects on the relationship between the Federal Government and Indian tribes, or on the distribution of power and responsibilities between the Federal Government and Indian Tribes.

Executive Order 13211—Actions Concerning Regulations That Significantly Affect Energy Supply, Distribution, or Use

This rule is not considered a significant energy action under Executive Order 13211. The revisions to the provisions governing the section 510(c) review required by SMCRA and related provisions would not have a significant effect on the supply, distribution, or use of energy.

Paperwork Reduction Act

In accordance with 44 U.S.C. 3507(d), OSM has submitted the information collection and recordkeeping requirements of 30 CFR part 778 to the Office of Management and Budget (OMB) for review and approval.

30 CFR Part 778

Title: Permit Applications—Minimum Requirements for Legal, Financial, Compliance, and Related Information—30 CFR 778.

OMB Control Number: 1029–XXX3.

Summary: Sections 507(b) and 510(c) of Pub. L. 95–87 provide that applicants for permits to engage in or carry out surface coal mining operations must submit certain information to the regulatory authority in a permit application. The required disclosures include information about the applicant's legal identity, business structure and business relationships, permit and violation histories, and related information. This information is used to ensure all legal, financial and compliance requirements are satisfied prior to issuance or denial of a permit.

Bureau Form Number: None.

Frequency of Collection: Once.

Description of Respondents: 301 Surface coal mining permit applicants and 24 State regulatory authorities.

Total Annual Responses: 2,388.

INFORMATION COLLECTION FOR 30 CFR PART 778

Section	Respondents	Responses	Hours per response	Total hours
778.9	301	888	1.15	1,024
778.11	301	376	1.4	526
778.12	301	75	2.4	180
778.13	301	75	2.4	180
778.14	301	45	2.6	120
778.15	324	324	5.6	1,806
778.16	213	213	8	1,710
778.17	324	324	2.8	903
778.22	68	68	2	135
Totals	301	2,388	2.75	6,584

Total Annual Burden Hours: 6,584.

Comments are invited on:

(a) Whether the proposed collection of information is necessary for the proper performance of OSM and State regulatory authorities, including whether the information will have practical utility;

(b) The accuracy of OSM's estimate of the burden of the proposed collection of information;

(c) Ways to enhance the quality, utility, and clarity of the information to be collected; and

(d) Ways to minimize the burden of collection on the respondents.

Under the Paperwork Reduction Act, OSM must obtain OMB approval of all information and recordkeeping requirements. No person is required to respond to an information collection request unless the form or regulation requesting the information has a currently valid OMB control (clearance) number. This number appears in section 778.8 of 30 CFR part 778. To obtain a copy of OSM's information collection clearance requests, explanatory information, and related forms, contact John A. Trelease at (202) 208–2783 or by e-mail at *jtreleas@osmre.gov.*

By law, OMB must respond to OSM's request for approval within 60 days of publication of this proposed rule, but may respond as soon as 30 days after publication. Therefore, to ensure consideration by OMB, you must send comments regarding these burden estimates or any other aspect of these information collection and recordkeeping requirements by January 28, 2004, to the Office of Management and Budget, Office of Information and Regulatory Affairs, Attention: Interior Desk Officer, via e-mail to *OIRA_DOCKET@omb.eop.gov,* or via facsimile to (202) 395–6566. Also, please send a copy of your comments to John A. Trelease, Office of Surface Mining Reclamation and Enforcement, 1951 Constitution Ave, NW., Room 210—SIB, Washington, DC 20240, or electronically to *jtreleas@osmre.gov.*

National Environmental Policy Act

OSM has reviewed this rule and determined that it is categorically excluded from the National Environmental Policy Act process in accordance with the Departmental Manual 516 DM 2, Appendix 1.10.

How Will This Rule Affect State and Indian Programs?

Following publication of a final rule, we will evaluate the State and Indian programs approved under section 503 of SMCRA to determine any changes in those programs that may be necessary. When we determine that a particular State program provision should be amended, the particular State will be notified in accordance with the provisions of 30 CFR 732.17. On the basis of the proposed rule, we have made a preliminary determination that State program revisions will be required.

Clarity of This Regulation

Executive Order 12866 requires each agency to write regulations that are easy to understand. We invite your comments on how to make this proposed rule easier to understand, including answers to questions such as the following: (1) Are the requirements in the proposed rule clearly stated? (2) Does the proposed rule contain technical language or jargon that interferes with its clarity? (3) Does the format of the proposed rule (grouping and order of sections, use of headings, paragraphing, *etc.* aid or reduce its clarity? (4) Would the rule be easier to understand if it were divided into more (but shorter) sections (a ''section'' appears in bold type and is preceded by the symbol ''§'' and a numbered heading; for example, § 773.14)? (5) Is the description of the proposed rule in the **SUPPLEMENTARY INFORMATION** section of this preamble helpful in understanding the proposed rule? (6) What else could we do to make the proposed rule easier to understand? Send a copy of any comments that concern how we could make this proposed rule easier to understand to: Office of Regulatory Affairs, Department of the Interior, Room 7229, 1849 C Street, NW., Washington, DC 20240. You may also e-mail the comments to this address: *Exsec@ios.doi.gov.*

List of Subjects

30 CFR Part 701

Law enforcement, Surface mining, Underground mining.

30 CFR Part 773

Administrative practice and procedure, Reporting and recordkeeping requirements, Surface mining, Underground mining.

30 CFR Part 774

Reporting and recordkeeping requirements, Surface mining, Underground mining.

30 CFR Part 778

Reporting and recordkeeping requirements, Surface mining, Underground mining.

30 CFR Part 843

Administrative practice and procedure, Law enforcement, Reporting and recordkeeping requirements, Surface mining, Underground mining.

30 CFR Part 847

Administrative practice and procedure, Penalties, Surface mining, Underground mining.

Dated: December 19, 2003.

Patricia E. Morrison,

Acting Assistant Secretary, Land and Minerals Management.

For the reasons given in the preamble, OSM proposes to amend 30 CFR Parts 701, 773, 774, 778, 843, and 847 as set forth below:

PART 701—PERMANENT REGULATORY PROGRAM

1. The authority citation for part 701 continues to read as follows:

Authority: 30 U.S.C. 1201 *et seq.*

2. Amend § 701.5 as follows:

a. Revise the definition of *control* or *controller.*

b. Revise the definition of *own, owner,* or *ownership.*

The revised definitions read as follows.

§ 701.5 Definitions.

* * * * *

Control or *controller,* when used in parts 773, 774, and 778 and § 843.21 of this chapter, refers to or means—

(1) A permittee of a surface coal mining operation;

(2) An operator of a surface coal mining operation; or

(3) Any other person who has the ability to determine the manner in which a surface coal mining operation is conducted.

* * * * *

Own, owner, or *ownership,* as used in parts 773, 774, and 778 and § 843.21 of this chapter (except when used in the context of ownership of real property), means being a sole proprietor or owning of record in excess of 50 percent of the voting securities or other instruments of ownership of an entity.

* * * * *

PART 773—REQUIREMENTS FOR PERMITS AND PERMIT PROCESSING

3. The authority citation for part 773 continues to read as follows:

Authority: 30 U.S.C. 1201 *et seq.,* 16 U.S.C. 470 *et seq.,* 16 U.S.C. 661 *et seq.,* 16 U.S.C. 703 *et seq.,* 16 U.S.C. 668a *et seq.,* 16 U.S.C. 469 *et seq.,* and 16 U.S.C. 1531 *et seq.*

4. In § 773.8, revise paragraph (b)(1) to read as follows:

§ 773.8 General provisions for review of permit application information and entry of information into AVS.

* * * * *

(b) * * *

(1) The information you submit under §§ 778.11 and 778.12(c) of this subchapter.

* * * * *

5. In § 773.9, revise paragraph (a) to read as follows:

§ 773.9 Review of applicant, operator, and ownership and control information.

(a) We, the regulatory authority, will rely upon the information that you, the applicant, submit under § 778.11 of this subchapter, information from AVS, and any other available information, to review your and your operator's business structure and ownership or control relationships.

* * * * *

6. In § 773.10, revise paragraphs (b) and (c) to read as follows:

§ 773.10 Review of permit history.

* * * * *

(b) We will also determine if you, your operator, or your designated controller disclosed under § 778.11(d) of this subchapter have previous mining experience.

(c) If you, your operator, or your designated controller do not have any previous mining experience, we may conduct additional reviews under § 774.11(f) of this subchapter. The purpose of this review will be to determine if someone else with mining experience controls the mining operation.

7. In § 773.12, revise paragraphs (a)(1) and (a)(2), remove paragraphs (a)(3) and (b), and redesignate paragraphs (c), (d) and (e) as paragraphs (b), (c), and (d), respectively, to read as follows:

§ 773.12 Permit eligibility determination.

(a) * * *

(1) You directly own or control has an unabated or uncorrected violation; or

(2) You or your operator indirectly control has an unabated or uncorrected violation and your control was established or the violation was cited after November 2, 1988.

* * * * *

8. In § 773.14, revise paragraph (b) introductory text to read as follows:

§ 773.14 Eligibility for provisionally issued permits.

* * * * *

(b) We, the regulatory authority, will find you eligible for a provisionally issued permit under this section if you demonstrate that one or more of the following circumstances exists with respect to all violations listed in paragraph (a) of this section—

* * * * *

9. In § 773.21, revise paragraph (c) to read as follows:

§ 773.21 Initial review and finding requirements for improvidently issued permits.

* * * * *

(c) When we make a preliminary finding under paragraph (a) of this section, we must serve you with a written notice of the preliminary finding, which must be based on reliable, credible, and substantial evidence and establish a *prima facie* case that your permit was improvidently issued.

* * * * *

10. Amend § 773.22 by removing paragraph (d) and redesignating paragraphs (e), (f), (g) and (h) as (d), (e) (f), and (g), respectively.

11. In § 773.23, revise paragraph (c)(2) to read as follows:

§ 773.23 Suspension or rescission requirements for improvidently issued permits.

* * * * *

(c) * * *

(2) Post the notice at our office closest to the permit area.

* * * * *

12. In § 773.26, revise the table in paragraph (a) and add paragraph (e) to read as follows:

§ 773.26 How to challenge an ownership or control listing or finding.

* * * * *

(a) * * *

If the challenge concerns . . .	then you must submit a written explanation to . . .
(1) A pending State or Federal permit application . . .	the regulatory authority with jurisdiction over the application.
(2) Your ownership or control of a surface coal mining operation, and you are not currently seeking a permit . . .	the regulatory authority with jurisdiction over the surface coal mining operation.

* * * * *

(e) At any time, you, a person listed in AVS as an owner or controller of a surface coal mining operation, may request an explanation from the AVS Office as to the reason you are shown in AVS in an ownership or control capacity. Within 14 days of your request, the AVS Office will provide a response describing why you are listed in AVS.

13. In § 773.27, revise paragraph (a) to read as follows:

§ 773.27 Burden of proof for ownership or control challenges.

* * * * *

(a) When you challenge a listing of ownership or control or a *prima facie* finding of ownership or control made under § 774.11(f) of this subchapter, you must prove by a preponderance of the evidence that you either—

(1) Do not own or control the entire surface coal mining operation or relevant portion or aspect thereof; or

(2) Did not own or control the entire surface coal mining operation or relevant portion or aspect thereof during the relevant time period.

* * * * *

14. In § 773.28, revise paragraph (d) to read as follows:

§ 773.28 Written agency decision on challenges to ownership or control listings or findings.

* * * * *

(d) We will post all decisions made under this section on AVS.

* * * * *

PART 774—REVISION; RENEWAL; TRANSFER, ASSIGNMENT, OR SALE OF PERMIT RIGHTS; POST-PERMIT ISSUANCE REQUIREMENTS; AND OTHER ACTIONS BASED ON OWNERSHIP, CONTROL, AND VIOLATION INFORMATION

15. The authority citation for part 774 continues to read as follows:

Authority: 30 U.S.C. 1201 *et seq.*

16. In § 774.11, revise paragraphs (a)(3), (e), (f), redesignate paragraph (g) as paragraph (i), add new paragraphs (g) and (h), and revise newly designated paragraph (i) to read as follows:

§ 774.11 Post-permit issuance requirements for regulatory authorities and other actions based on ownership, control, and violation information.

(a) * * *

We must enter into AVS all . . .	within 30 days after . . .
* * * * *	
(3) Changes to information initially required to be provided by the applicant under 30 CFR 778.11.	receiving notice of a change.
* * * * *	

* * * * *

(e) *Entry into AVS.* (1) If you do not request a hearing, and the time for seeking a hearing has expired, we will enter our finding into AVS.

(2) If you request a hearing, we will enter our finding into AVS only if that finding is upheld by the Office of Hearings and Appeals.

(f) At any time, we may identify any person who owns or controls an entire operation or any relevant portion or aspect thereof. If we identify such a person, we must issue a written finding to the person and the applicant or permittee describing the nature and extent of ownership or control; our written finding must be based on reliable, credible, and substantial evidence and establish a *prima facie* case of ownership or control.

(g) After we issue a written finding under paragraph (f) of this section, we will allow you, the person subject to the finding, 30 days in which to submit any information tending to demonstrate your lack of ownership or control. If, after reviewing any information you submit, we are persuaded that you are not an owner or controller, we will serve you a written notice to that effect. If, after reviewing any information you submit, we still find that you are an owner or controller or if you do not submit any information within the 30-day period, we must—

(1) Enter our finding under paragraph (f) of this section into AVS; and

(2) Require you to satisfy the requirements of § 778.11(d) of this subchapter, if appropriate.

(h) We need not make a finding as provided for under paragraph (f) of this section before entering into AVS the information required to be disclosed under §§ 778.11(b) and (c) of this subchapter; however, the mere listing of a person in the AVS pursuant to §§ 778.11(b) or (c) does not create a presumption or constitute a determination that such person owns or controls a surface coal mining operation.

(i) If we identify you as an owner or controller under paragraph (f) of this section, you may challenge the finding using the provisions of §§ 773.25, 773.26 and 773.27 of this subchapter.

PART 778—PERMIT APPLICATIONS—MINIMUM REQUIREMENTS FOR LEGAL, FINANCIAL, COMPLIANCE, AND RELATED INFORMATION

17. The authority citation for part 778 continues to read as follows:

Authority: 30 U.S.C. 1201 *et seq.*

18. In § 778.11, revise the section heading and paragraphs (a)(1), (c)(2), (c)(3), (c)(4), (c)(5) and (d) to read as follows:

§ 778.11 Providing applicant and operator information.

(a) * * *

(1) A statement indicating whether you and your operator are corporations, partnerships, associations, sole proprietorships, or other business entities;

* * * * *

(c) * * *

(2) Partner.

(3) Director.

(4) Person performing a function similar to a director.

(5) Person who owns 10 percent or more of the applicant or the operator.

(d) In the permit application, you must designate the natural person expected to have the greatest level of control over the entire proposed surface coal mining operation. That person must also sign the permit application, acknowledging the designation. Such designation will not, by itself, be sufficient evidence on which to base the imposition of an individual civil penalty under §§ 724.12 or 846.12 or an alternative enforcement action under §§ 847.11 or 847.16 of this chapter.

* * * * *

PART 843—FEDERAL ENFORCEMENT

19. The authority citation for part 843 continues to read as follows:

Authority: 30 U.S.C. 1201 *et seq.*

20. In § 843.21, revise paragraphs (a) and (d), remove paragraph (c)(2), redesignate paragraph (c)(3) as paragraph (c)(2), to read as follows:

§ 843.21 Procedures for improvidently issued State permits.

(a) *Initial notice.* If we, OSM, on the basis of any reliable and credible information available to us, including any such information submitted by any person, have reason to believe that a State-issued permit meets the criteria for an improvidently issued permit under § 773.21 of this chapter, or the State regulatory program equivalent, and the State has failed to take appropriate action on the permit under the State regulatory program equivalents of §§ 773.21 through 773.23 of this chapter, we must issue a notice, by certified mail, to the State, to you, the permittee, and to any person providing information under paragraph (a) of this section. The notice will state in writing the reasons for our belief that your permit was improvidently issued. The notice also will request the State to take the appropriate action, as specified in paragraph (b) of this section, within 10 days.

* * * * *

(d) *Federal inspection and written finding.* No less than 10 days but no more than 30 days after providing notice under paragraph (c) of this section, we will conduct an inspection and make a written finding as to whether your

permit was improvidently issued under the criteria in § 773.21 of this chapter. In making that finding, we will consider all available information, including information submitted by you, the State, or any other person. We will post that finding at our office closest to the permit area. If we find that your permit was improvidently issued, we must issue a notice to you and the State by certified mail. The notice will state in writing the reasons for our finding under this section.

* * * * *

PART 847—ALTERNATIVE ENFORCEMENT

21. The authority citation for part 847 continues to read as follows:

Authority: 30 U.S.C. 1201 *et seq.*

22. In § 847.11, revise the introductory text to read as follows:

§ 847.11 Criminal penalties.

Under sections 518(e) and (g) of the Act, we, the regulatory authority, may request the Attorney General to pursue criminal penalties against any person who—

* * * * *

23. In § 847.16, revise paragraph (a) introductory text to read as follows:

§ 847.16 Civil actions for relief.

(a) Under section 521(c) of the Act, we, the regulatory authority, may request the Attorney General to institute a civil action for relief whenever you, the permittee, or your agent—

* * * * *

[FR Doc. 03–31791 Filed 12–24–03; 8:45 am]

BILLING CODE 4310–05–P

Federal Register

Monday,
December 29, 2003

Part III

Securities and Exchange Commission

17 CFR Part 240
Recordkeeping Requirements for Registered Transfer Agents; Final Rule

SECURITIES AND EXCHANGE COMMISSION

17 CFR Part 240

[Release No. 34–48949; File No. S7–13–03]

RIN 3235–AI87

Recordkeeping Requirements for Registered Transfer Agents

AGENCY: Securities and Exchange Commission (''Commission'').

ACTION: Final rule.

SUMMARY: The Commission is amending its rule concerning recordkeeping requirements for registered transfer agents. The amendments will make clear that registered transfer agents may use electronic, microfilm, and microfiche media as a substitute for hard copy records, including cancelled stock certificates, for purposes of complying with the Commission's transfer agent recordkeeping rules and that a third party on behalf of a registered transfer agent may place into escrow the required software information.

EFFECTIVE DATE: January 28, 2004.

FOR FURTHER INFORMATION CONTACT: Jerry W. Carpenter, Assistant Director, or David Karasik, Special Counsel, at 202–942–4187, Office of Risk Management and Control, Division of Market Regulation, Securities and Exchange Commission, 450 5th Street, NW., Washington, DC 20549–1001.

I. Discussion of Amendments to Rule 17Ad–7(f)

A. Background

Rule 17Ad–6 [1] sets forth the records that transfer agents must make and preserve and Rule 17Ad–7 describes how and for how long the required records must be maintained. On April 27, 2001, the Commission adopted amendments[2] to Rule 17Ad–7, that (1) allows registered transfer agents to use electronic storage media[3] to maintain records that they are required by Rule 17Ad–6 to retain and (2) modified the requirements for using micrographic media [4] as a method of record storage. Specifically, Rule 17Ad–7(f) requires transfer agents that use electronic or micrographic media to store records to:

- Use electronic or micrographic storage mechanisms that are designed to ensure the accessibility, security, and integrity of the records, detect attempts to alter or remove the records, and provide means to recover altered, damaged, or lost records;
- Create an index of the records that are electronically or micrographically stored and store the index with the underlying records;
- Keep a duplicate of all records and indexes that are stored using electronic or micrographic storage media;
- Be able to promptly download electronically or micrographically stored records to an alternate medium such as paper, microfilm, or microfiche; and
- Keep in escrow an updated copy of the software or other information that is necessary to access and download electronically stored records.

Rule 17Ad–7 does not require transfer agents that wish to continue to maintain their records in hard copy format to maintain their records any differently from the way they stored them prior to the rule change. The purpose of those amendments was to increase the flexibility and efficiency of transfer agent recordkeeping while maintaining necessary controls over accuracy, integrity, and access to transfer agent records.

B. Discussion of Rule Amendments

Since the amendments to Rule 17Ad–7(f) were adopted in April 2001, we have learned that there is some uncertainty whether (1) Rule 17Ad–7(f) allows transfer agents to rely exclusively on electronic or micrographic records for purposes of the Commission's transfer agent recordkeeping rules and to no longer maintain hard copy records, including cancelled certificates and (2) a third party on behalf of the transfer agent may deposit with an independent escrow agent a copy of all the documentation required under Rule 17Ad–7(f)(5)(ii) for the purpose of complying with Rule 17Ad–7(f)(5)(ii).[5] In order to eliminate this uncertainty, the Commission issued a release requesting comment on proposed textual changes to Rule 17Ad–7(f) (''Proposing Release'').[6]

We proposed to amend paragraph (f) of Rule 17Ad–7 to clarify that records, including cancelled securities certificates, stored electronically or micrographically in accordance with the provisions of Rule 17Ad–7 may serve as a substitute for hard copy records required to be maintained pursuant to Rule 17Ad–6. Accordingly, this ''substitution'' provision would allow, but not mandate, the destruction of hard copy records, including securities certificates, if electronic or micrographic records have been created in conformity with Rule 17Ad–7(f).[7]

In addition, we proposed to amend paragraph (f)(5)(ii) of Rule 17Ad–7 to clarify that a transfer agent may fulfill its software escrow obligation by having a third party deposit with an independent escrow agent a copy of all the documentation required under Rule 17Ad–7(f)(5)(ii) on behalf of the transfer agent.[8] A transfer agent using a third party vendor to maintain its records would be allowed to have the third party vendor place in escrow a copy of the vendor's proprietary source code on behalf of the transfer agent using the vendor's services. This amendment also would allow a third party vendor maintaining the records of more than one transfer agent to place in escrow one copy of the vendor's proprietary source code for all the transfer agents for which it acts.[9]

II. Discussion of Comment Letters

We received three comment letters in response to the Proposing Release.[10]

[1] 17 CFR 240.17Ad–6. All references to Rules 17Ad–6 and 17Ad–7 or to any paragraph of those rules will be to 17 CFR 240.17Ad–6 and 240.17Ad–7, respectively.

[2] Securities Exchange Act Release No. 44227 (Apr. 27, 2001), 66 FR 21648 (May 1, 2001) (''Adopting Release'').

[3] Under Rule 17Ad–7(f)(1)(ii), the term ''electronic storage media'' refers to any digital storage medium or system.

[4] Under Rule 17Ad–7(f)(1)(i), the term ''micrographic media'' refers to microfilm or microfiche or any similar medium.

[5] Under Rule 17Ad–7(f)(5)(ii), transfer agents that choose to use electronic storage media must, among other things, ''place in escrow with an independent third party and keep current a copy of the physical and logical format of the electronic storage or micrographic media, the field format of all different information types written on the electronic storage media and source code and the appropriate documentation and information necessary to access records and indexes * * *''

[6] Securities Exchange Act Release No. 48036 (June 16, 2003); 68 FR 36951 (June 20, 2003).

[7] The Commission has proposed new Rule 17Ad–19 that would require transfer agents to establish and implement written procedures for the cancellation, storage, transportation, and destruction of securities certificates. Securities Exchange Act Release No. 43401 (Oct. 2, 2000); 65 FR 59766 (Oct. 6, 2000). In addition, while amended Rule 17Ad–7 will permit the destruction of paper records for purposes of our recordkeeping requirements, a transfer agent may have an obligation to preserve such paper records under other applicable law or rules.

[8] One situation that calls for this clarifying amendment is when a software provider licenses its electronic records storage system software to a transfer agent but does not grant a license for the source code. In this case, the transfer agent does not have access to the source code.

[9] Rule 17Ad–7(f)(5)(ii) requires the third party to file a written undertaking with the Commission stating that it agrees to furnish the Commission with the appropriate documentation and information necessary to access the records and indexes promptly upon request.

[10] Letters from Jeffrey G. Rutowski, Vice President, Integrated Fund Services (June 30, 2003); Cathy Danahy, Assistant Director, Nebraska Secretary of State's Office, Records Management Division (July 14, 2003); and Charles V. Rossi, Division President, EquiServe, Inc. (July 29, 2003).

Integrated Fund Services (''IFS'') argued that the general requirement that an escrow agent be independent of both the transfer agent and the third party software provider is overly burdensome to transfer agents and software developers and that sufficient legal and regulatory remedies exist that provide the Commission access to the software should the transfer agent fail to do so. IFS believes that these factors discourage transfer agents from using electronic records management systems.

The Records Management Division of the Nebraska Secretary of State contended that (1) electronic documents are not as widely accepted as evidence in state and federal judicial proceedings compared to paper and microfilm records, (2) in addition to the software, the hardware (including printers and ink cartridges) necessary to retrieve and reproduce hard copy images of the records should also be kept in escrow, (3) paper and microfilm are easier to access than electronic records, and (4) paper and microfilm records should be subject to the same performance requirements as electronic records, specifically that they should be indexed, kept in duplicate, and kept safe and secure (*e.g.*, from heat and sunlight).

While we will consider these two commenters' observations and suggestions as we continue to assess the effectiveness of the transfer agent recordkeeping rules, their comments do not address the issues presented in the Proposing Release, which was to clarify that (1) electronic records may be maintained in lieu of paper records and (2) a third party may escrow the required software on behalf of a transfer agent. These comments relate more to the previously adopted amendments to Rule 17Ad–7 that allow transfer agents to use electronic storage media to maintain their records.[11]

EquiServe supported the proposed amendments. EquiServe stated that the proposed amendments will resolve an ambiguity, especially with respect to cancelled certificates, whether hard copy records need to be maintained if they are also stored electronically pursuant to the requirements set forth in Rule 17Ad–7. In addition, EquiServe agreed with the need to make clear that third parties may escrow the source code on behalf of transfer agents.

After careful consideration of the comment letters, we are adopting the proposed amendments to Rule 17Ad–7(f) as proposed.

[11] See *supra* note 2 and accompanying text.

III. Paperwork Reduction Act

The amendments to Rule 17Ad–7(f) do not contain new ''collection of information'' requirements within the meaning of the Paperwork Reduction Act of 1995 (''PRA'')[12] and therefore do not impose any new collection of information requirements that would require approval of the Office of Management and Budget (''OMB''). OMB initially approved the paperwork burden for Rule 17Ad–7(f) (OMB Control No. 3235–0136) when the Commission proposed amendments for Rule 17Ad–7(f) in 1999.[13]

IV. Costs and Benefits of the Proposed Rule Amendments

The Commission has identified certain costs and the benefits of the amendments to Rule 17Ad–7(f) as described below. Commenters did not provide any quantitative or other specific data relating to the costs or benefits of the proposed rule. We expect that registered transfer agents will choose to adopt electronic or micrographic recordkeeping if it is cost effective for them to do so.

A. Benefits

The amendments to Rule 17Ad–7(f) should also provide specific benefits to U.S. investors, issuers, transfer agents, and other financial intermediaries. The proposed software escrow provision should enable transfer agents to more conveniently comply with the current Rule 17Ad–7(f)(5)(ii) requirement that a copy of the electronic storage system the transfer agent utilizes to store its records be placed in escrow with an independent third party. Transfer agents that choose to exclusively adopt electronic or micrographic-based records systems in lieu of paper records may realize cost-savings and reduce certain risks associated with paper-based recordkeeping. While these benefits are not readily quantifiable in terms of dollar value, the use of electronic and storage media should reduce storage burdens (*e.g.*, the need for storage space) that transfer agents currently face in maintaining paper records. By further clarifying the ramifications of each records format system, transfer agents might now choose to use a broader range of storage methods. In addition, transfer agents that decide to store records electronically or micrographically will no longer have the facility or operational costs of a traditional paper based system. Transfer agents could then pass the cost savings to issuers who can, in turn, see a similar reduction in their transfer agent service fees. Also, by eliminating any legal uncertainty whether electronically and micrographically-retained records may serve as a substitute for hard copy records, registered transfer agents will be free to assess which storage method will best suits their business needs. Should they choose to benefit from advances in electronic recordkeeping technology, the time and labor in maintaining and accessing records should be reduced, resulting in operational and financial efficiencies. Other benefits include:

- Increased efficiency of recordkeeping operations by reducing the need to maintain records in hard copy format;
- Reduced likelihood that documents will be lost or misfiled;
- Ability to retrieve documents more quickly;
- Audit trails can be automated;
- Reduction of risk for natural disasters;
- File centralization is automatic (file and records need not be removed from their storage in order to reference them);
- Multiple persons can view the same document simultaneously;
- Access authorization can be automated;
- Space required for document storage is drastically reduced;
- Document indexing and cross-referencing can be automatic; and
- Documents can be copied, faxed, printed, and e-mailed without the paper originals.

B. Costs

The amendments to Rule 17Ad–7(f) should not impose costs on any particular person or entity because compliance with this provision would apply only to those transfer agents that choose to store any of their records exclusively in electronic form. Nevertheless, transfer agents that elect to use micrographic media or electronic storage media may incur some costs in destroying or otherwise disposing hard copy records that they elect to dispose or destroy. Any costs related to the use of micrographic or electronic storage media should be at least partly offset by the resulting elimination of the need to maintain and store records in hard copy format. This cost is likely to depend upon the volume of hard copy records

[12] 44 U.S.C. 3501 *et seq.*

[13] Securities Exchange Act Release No. 41442 (May 25, 1999), 64 FR 29608 (June 2, 1999). Subsequently, OMB approved the extension of this paperwork collection.

needed to be disposed. We expect these costs to be relatively minimal.[14]

We estimate that approximately 60 transfer agents will use a third party to escrow the required source code.[15] Each transfer agent will evaluate the risk and cost effectiveness of its records management solution differently based upon the solution that is best for its business model, such as its business practices and volume, and that assures its ability to comply with Rule 17Ad–7. Moreover, we cannot predict the effect of future market competition and innovation on the technologies that transfer agents might employ for their recordkeeping.

In addition, there will be some cost associated with the escrow requirement amendment. However, the Commission the Commission considered these costs in the April 2001 adopting release and any new costs associated with the escrow amendment (*i.e.*, having a third party escrow the source code on the transfer agent's behalf) would likely be included in the software contract between the parties.

V. Consideration of Burden on Competition, and Promotion of Efficiency, Competition, and Capital Formation

Section 3(f) of the Act[16] requires the Commission, when engaging in rulemaking that requires it to consider or determine whether an action is necessary or appropriate in the public interest, to consider whether the action will promote efficiency, competition, and capital formation.

Section 23(a)(2) of the Act requires us to consider the anti-competitive effects of any rules that we adopt under the Act. This section prohibits us from adopting any rule that would impose a burden on competition not necessary or appropriate in furtherance of the purposes of the Act.

In the Proposing Release, the Commission solicited comments on whether the amendments to Rule 17Ad–7 would have any effects on competition, efficiency and capital formation. We received no comments in response to this solicitation.

The Commission believes the amendments should improve efficiency, competition, and capital formation. The amendments should promote efficiency by allowing registered transfer agents to benefit from advances in recordkeeping technology. The amendments should promote competition between the vendors who create and manufacture the new storage technologies and between the transfer agents who use the new methods. Vendors can compete with each other to develop systems that can allow transfer agents to manage their records on a more economical basis. The improvement in storage technologies would allow transfer agents to compete among one another in offering to companies a more cost-effective and efficient service. Finally, the amendments should not adversely affect capital formation because the amendments relate solely to post-issuance activity.

The Commission does not anticipate that the amendments will impose any burden on competition that is not necessary or appropriate in furtherance of the Act. The amended rule permits, but does not require, registered transfer agents to use electronic or micrographic media to retain their records in lieu of hard copies and a third party to place the required software code into escrow on behalf of a registered transfer agent. The amendments are intended to remove legal uncertainties facing transfer agents who decide to store records in an electronic or micrographic form. The Commission believes that by adopting these amendments, transfer agents will have greater certainty to assess which storage method will best suits their business needs.

VI. Final Regulatory Flexibility Analysis

This Final Regulatory Flexibility Analysis (''FRFA'') has been prepared in accordance with the Regulatory Flexibility Act (''RFA'').[17] This analysis relates to amendments to Rule 17Ad–7(f) under the Securities Exchange Act of 1934(''Act'')[18] to determine whether the rule amendments will have a significant economic impact on a substantial number of small entities. The amendments will allow registered transfer agents to take advantage of improvements in electronic recordkeeping technology by being able to store their records exclusively using electronic storage technology and by being able to have a third party place in escrow the source code on behalf of the transfer agent.

A. Need for the Rule

Notwithstanding recent amendments to Rule 17Ad–7,[19] there appeared to be some uncertainty whether (1) Rule 17Ad–7(f) allows transfer agents to rely exclusively on electronic or micrographic records for purposes of the Commission's transfer agent recordkeeping rules and to no longer maintain hard copy records, including cancelled certificates, and (2) a third party may deposit with an independent escrow agent a copy of all the documentation required under Rule 17Ad–7(f)(5)(ii) on behalf of the transfer agent for the purpose of complying with Rule 17Ad–7(f)(5)(ii).[20]

In order to eliminate this uncertainty, the Commission is amending Rule 17Ad–7(f) to clarify that records, including cancelled securities certificates, required to be maintained pursuant to Rule 17Ad–6 may be retained electronically or micrographically and may serve as a substitute for hard copy records required to be maintained pursuant to Rule 17Ad–6. Accordingly, this substitution provision allows, but would not mandate, the destruction of hard copy records, including securities certificates, after electronic or micrographic records have been created in conformity with Rule 17Ad–7(f).[21]

The amendments make it clear that transfer agents may use electronically and micrographically retained records to comply with the Commission's transfer agent recordkeeping requirements. We note that the Commission did not take a position on whether transfer agents should store

[14] In the adopting release to Rule 17Ad–7(f), we estimated that approximately 500 transfer agents were likely to use electronic or micrographic storage systems. During the year-and-a-half since Rule 17Ad–7(f) has been effective, however, five transfer agents have taken advantage of the record storage alternatives provided by the rule.

[15] Although this estimate represents less than 10% of the number of currently-registered transfer agents, we expect that many of the largest bank, corporate, and independent transfer agents, which represent over 90% of the entire transfer agent industry volume, will eventually convert their records-management systems to electronic-based solutions.

[16] 15 U.S.C. 78c(f).

[17] 5 U.S.C. 603.

[18] 15 U.S.C. 78a *et seq.*

[19] *Supra* note 2.

[20] Under Rule 17Ad–7(f)(5)(ii), transfer agents that choose to use electronic storage media to store the required records must, among other things, ''place in escrow with an independent third party and keep current a copy of the physical and logical format of the electronic storage or micrographic media, the field format of all different information types written on the electronic storage media and source code and the appropriate documentation and information necessary to access records and indexes. * * * ''

[21] While Rule 17Ad–7 would permit destruction of paper records for purposes of our recordkeeping requirements, a transfer agent may have an obligation to preserve paper records under other applicable laws or rules. The Commission proposed new Rule 17Ad–19 that would require transfer agents to establish and implement written procedures for the cancellation, storage, transportation, and destruction of securities certificates. Securities Exchange Act Release No. 43401 (Oct. 2, 2000); 65 FR 59766 (Oct. 6, 2000). In addition, while Rule 17Ad–7 would permit the destruction of paper records for purposes of our recordkeeping requirements, a transfer agent may have an obligation to preserve such paper records under other applicable law or rules.

their records using electronically or micrographically instead of in paper.

In addition, we are amending paragraph (f)(5)(ii) of Rule 17Ad–7 to clarify that a transfer agent may fulfill its software escrow obligation by having a third party deposit with an independent escrow agent a copy of all the documentation required under Rule 17Ad–7(f)(5)(ii) on behalf of the transfer agent.[22]

Amendments to Rule 17Ad–7 are adopted under the Commission's authority set forth in Sections 17, 17A, and 23 of the Act.

B. Significant Issues Raised by Public Comment

We received three comment letters in response to the Proposing Release.[23] Integrated Fund Services (''IFS'') argued that the general requirement that an escrow agent be independent of both the transfer agent and the third party software provider is overly burdensome to transfer agents and software developers and that sufficient legal and regulatory remedies exist that provide the Commission access to the software should the transfer agent fail to do so. IFS believes that these factors discourage transfer agents from using electronic records management systems.

The Records Management Division of the Nebraska Secretary of State contended that (1) electronic documents are not as widely accepted as evidence in state and federal judicial proceedings compared to paper and microfilm records, (2) in addition to the software, the hardware, including printers and ink cartridges, necessary to retrieve and reproduce hard copy images of the records should also be kept in escrow, (3) paper and microfilm are easier to access than electronic records, and (4) paper and microfilm records should be subject to the same performance requirements as electronic records, specifically that they should be indexed, kept in duplicate, and kept safe and secure (*e.g.* from heat and sunlight).

While we will consider these two commenters' observations and suggestions as we continue to assess the effectiveness of the transfer agent recordkeeping rules, such comments do not address the issues presented in the Proposing Release, which was to clarify that (1) electronic records may be maintained in lieu of paper records and (2) a third party may escrow the required software on behalf of a transfer agent. Their comments relate more to the issues raised when we adopted amendments to Rule 17Ad–7 that allowed transfer agents to use electronic storage media to maintain their records.

EquiServe supported the proposed amendments. EquiServe stated that the proposed amendment will resolve an ambiguity, especially with respect to cancelled certificates, whether hard copy records need to be maintained if they are also stored electronically pursuant to the requirements set forth in Rule 17Ad–7. In addition, EquiServe agreed with the need to make clear that third parties may escrow the source code on behalf of transfer agents.

Accordingly, we are adopting the proposed amendments to Rule 17Ad–7(f) entirely as proposed.

C. Small Entities Subject to the Rule

The rule amendments should not affect registered transfer agents that are small entities. Rule 0–10(h) under the Act defines the term ''small business'' or ''small organization'' to include any transfer agent that: (1) Received less than 500 items for transfer and less than 500 items for processing during the preceding six months (or in the time that it has been in business, if shorter); (2) transferred items only of issuers that would be deemed ''small business'' or ''small organizations'' as defined in Rule 0–10 under the Exchange Act; (3) maintained master shareholder files that in the aggregate contained less than 1,000 shareholder accounts or was the named transfer agent for less than 1,000 shareholder accounts at all times during the preceding fiscal year (or in the time that it has been in business, if shorter); and (4) is not affiliated with any person (other than a natural person) that is not a small business or small organization under Rule 0–10.[24] We estimate that 180 registered transfer agents qualify as small entities and would be subject to the amendment to Rule 17Ad–7(f).

D. Projected Reporting, Recordkeeping, and Other Compliance Requirements

The amendments do not impose any new reporting, recordkeeping, or other compliance costs or requirements on any particular person or entity. First, the amendments do not in any way change the manner that transfer agents are currently maintaining their records today. Second, compliance with this provision is purely voluntary depending on whether registered transfer agents choose to exclusively use electronic or micrographic media to store the required records. While transfer agents that elect to exclusively use micrographic media or electronic storage media may incur some costs in destroying or otherwise disposing hard copy records. However, the Commission believes that this cost is minimal. Finally, while there will be some cost imposed by the proposed escrow requirement provision, these costs were contemplated by the Commission in the Adopting Release and any new costs associated with the escrow amendment (*i.e.*, having a third party escrow the source code on the transfer agent's behalf) would likely be included in the software contract between the parties.

Accordingly, we believe that amendments to Rule 17Ad–7(f) should not have a significant economic impact on a substantial number of small entities.

E. Agency Action To Minimize Effect on Small Entities

The Regulatory Flexibility Act directs the Commission to consider significant alternatives that would accomplish the stated objective while minimizing any significant adverse impact on small entities. In connection with the adopted amendments, the Commission considered the following alternatives: (a) The establishment of differing compliance or reporting requirements or timetables that take into account the resources of small entities; (b) the clarification, consolidation, or simplification of compliance and reporting requirements under the rule for small entities; (c) the use of performance standards rather than design standards; and (d) an exemption from coverage of the proposed amendment or any part thereof for small entities.

The adopted amendments are designed to enable registered transfer agents to take advantage of improvements in electronic recordkeeping technology by being able to store their records exclusively using electronic storage technology and by being able to have a third party place in escrow the source code on behalf of the transfer agent. The Commission believes that different compliance or reporting requirements for small entities are not necessary because the amendments do not establish any new reporting, recordkeeping, or compliance requirements for small entities. In addition, the Commission has concluded that it is not feasible to further clarify, consolidate, or simplify the proposed amendments for small

[22] One situation that necessitates this clarifying amendment is when a software provider licenses its electronic records storage system software to a transfer agent but does not grant a license for the source code. As a result, the transfer agent does not have access to the source code.

[23] Letters from Jeffrey G. Rutowski, Vice President, Integrated Fund Services (June 30, 2003); Cathy Danahy, Assistant Director, Nebraska Secretary of State's Office, Records Management Division (July 14, 2003); and Charles V. Rossi, Division President, EquiServe, Inc. (July 29, 2003).

[24] 17 CFR 240.0–10(h).

entities. The Commission also believes that creating an exemption from the requirements of the amendments would not reduce the impact of the proposed amendments on small entities. We note that Rule 17Ad–4(b) under the Exchange Act [25] already exempts small transfer agents from many of the recordkeeping requirements of Rules 17Ad–6 and 17Ad–7. In addition, any burdens imposed by the amendments apply only to those transfer agents that choose to use electronic or micrographic storage media.

VII. Statutory Authority

The Commission is adopting amendments to § 240.17Ad–7 of chapter II of title 17 of the *Code of Federal Regulations* pursuant to sections 17, 17A, and 23(a) [26] of the Act in the manner set forth below.

[25] 17 CFR 240.17Ad–4(b).

[26] 15 U.S.C. 78q, 78q–1, and 78w(a).

List of Subjects in 17 CFR Part 240

Reporting and recordkeeping requirements, Securities, Transfer agents.

Text of Amendment

■ In accordance with the foregoing, title 17, chapter II of the *Code of Federal Regulations* is to be amended as follows:

PART 240—GENERAL RULES AND REGULATIONS, SECURITIES EXCHANGE ACT OF 1934

■ 1. The authority citation for part 240 continues to read in part as follows:

Authority: 15 U.S.C. 77c, 77d, 77g, 77j, 77s, 77z–2, 77z–3, 77eee, 77ggg, 77nnn, 77sss, 77ttt, 78c, 78d, 78e, 78f, 78g, 78i, 78j, 78j–1, 78k, 78k–1, 78*l*, 78m, 78n, 78o, 78p, 78q, 78s, 78u–5, 78w, 78x, 78*ll*, 78mm, 79q, 79t, 80a–20, 80a–23, 80a–29, 80a–37, 80b–3, 80b–4, 80b–11, 7202, 7241, 7262, and 7263; and 18 U.S.C. 1350, unless otherwise noted.

* * * * *

■ 2. Section 240.17Ad–7 is amended by:

■ a. Adding introductory text to paragraph (f); and

■ b. In the first sentence of paragraph (f)(5)(ii), revise the phrase ''Place in escrow'' to read ''Place, or have a third party place on your behalf, in escrow''.

The addition reads as follows:

§ 240.17Ad–7 Record retention.

* * * * *

(f) Subject to the conditions set forth in this section, the records required to be maintained pursuant to § 240.17Ad–6 may be retained using electronic or micrographic media and may be preserved in those formats for the time required by § 240.17Ad–7. Records stored electronically or micrographically in accordance with this paragraph may serve as a substitute for the hard copy records required to be maintained pursuant to § 240.17Ad–6.

* * * * *

Dated: December 18, 2003.

By the Commission.

Margaret H. McFarland,

Deputy Secretary.

[FR Doc. 03–31640 Filed 12–24–03; 8:45 am]

BILLING CODE 8010–01–P

Federal Register

Monday,
December 29, 2003

Part IV

Securities and Exchange Commission

17 CFR Parts 211, 231, and 241

Commission Guidance Regarding Management's Discussion and Analysis of Financial Condition and Results of Operations; Interpretation; Rule

SECURITIES AND EXCHANGE COMMISSION

17 CFR Parts 211, 231 and 241

[Release Nos. 33–8350; 34–48960; FR–72]

Commission Guidance Regarding Management's Discussion and Analysis of Financial Condition and Results of Operations

AGENCY: Securities and Exchange Commission.

ACTION: Interpretation.

SUMMARY: The Commission is publishing interpretive guidance regarding the disclosure commonly known as Management's Discussion and Analysis of Financial Condition and Results of Operations, or MD&A, which is required by Item 303 of Regulation S–K, Items 303(b) and (c) of Regulation S–B, Item 5 of Form 20–F and Paragraph 11 of General Instruction B of Form 40–F. This guidance is intended to elicit more meaningful disclosure in MD&A in a number of areas, including the overall presentation and focus of MD&A, with general emphasis on the discussion and analysis of known trends, demands, commitments, events and uncertainties, and specific guidance on disclosures about liquidity, capital resources and critical accounting estimates.

EFFECTIVE DATE: December 29, 2003.

FOR FURTHER INFORMATION CONTACT: Questions about specific filings should be directed to staff members responsible for reviewing the documents the registrant files with the Commission. General questions about this release should be referred to Todd Hardiman, Karl Hiller, Nina Mojiri-Azad, Mara Ransom, or Sondra Stokes, Division of Corporation Finance, at (202) 824–5300, Securities and Exchange Commission, 450 5th Street NW., Washington, DC 20549–0401.

SUPPLEMENTARY INFORMATION:

I. Overview

A. Purpose

This release interprets requirements for Management's Discussion and Analysis of Financial Condition and Results of Operations (''MD&A'').[1] It provides guidance to assist companies:

- In preparing MD&A disclosure that is easier to follow and understand; and
- In providing information that more completely satisfies our previously enunciated principal objectives of MD&A.

We believe that management's most important responsibilities include communicating with investors in a clear and straightforward manner. MD&A is a critical component of that communication. The Commission has long sought through its rules, enforcement actions and interpretive processes to elicit MD&A that not only meets technical disclosure requirements but generally is informative and transparent. We believe and expect that when companies follow the guidance in this release, the overall quality of their MD&A will improve. The Division of Corporation Finance will continue to review MD&A submitted after this guidance is released and take action as appropriate. In addition, we have instructed the Division to keep us apprised of whether this guidance has produced improved disclosure, and to suggest additional Commission action related to MD&A as appropriate.

B. Approach to MD&A

The purpose of MD&A is not complicated. It is to provide readers information ''necessary to an understanding of [a company's] financial condition, changes in financial condition and results of operations.''[2] The MD&A requirements are intended to satisfy three principal objectives:

- To provide a narrative explanation of a company's financial statements that enables investors to see the company through the eyes of management;
- To enhance the overall financial disclosure and provide the context within which financial information should be analyzed; and
- To provide information about the quality of, and potential variability of, a company's earnings and cash flow, so that investors can ascertain the likelihood that past performance is indicative of future performance.[3]

MD&A should be a discussion and analysis of a company's business as seen through the eyes of those who manage that business. Management has a unique perspective on its business that only it can present. As such, MD&A should not be a recitation of financial statements in narrative form or an otherwise uninformative series of technical responses to MD&A requirements, neither of which provides this important management perspective. Through this release we encourage each company and its management to take a fresh look at MD&A with a view to enhancing its quality. We also encourage early top-level involvement by a company's management in identifying the key disclosure themes and items that should be included in a company's MD&A.

Based on our experience with many companies' current disclosures in MD&A, we believe there are a number of general ways for companies to enhance their MD&A consistent with its purpose. The recent review experiences of the staff of the Division of Corporation Finance, including its Fortune 500 review,[4] have led us to conclude that additional guidance would be especially useful in the following areas:

- The overall presentation of MD&A;
- The focus and content of MD&A (including materiality, analysis, key performance measures and known material trends and uncertainties);
- Disclosure regarding liquidity and capital resources; and
- Disclosure regarding critical accounting estimates.

Therefore, in this release, we emphasize the following points regarding overall presentation:

- Within the universe of material information, companies should present

[1] The requirements are set forth in Item 303 of Regulation S–K (Management's Discussion & Analysis of Financial Condition and Results of Operations) [17 CFR 229.303], Items 303(b) and (c) of Regulation S–B (Management's Discussion & Analysis of Financial Condition and Results of Operations, and Off-balance sheet arrangements) [17 CFR 228.303(b) and (c)], Item 5 of Form 20–F (Operating and Financial Review and Prospects) [17 CFR 249.220f], and General Instruction B.(11) of Form 40–F (Off-balance sheet arrangements) [17 CFR 249.240f].

Although the wording of the MD&A requirement in Form 20–F was revised in 1999, the Commission's adopting release noted that we interpret that Item as calling for the same disclosure as Item 303 of Regulation S–K. See Release No. 33–7745 (Sept. 28, 1999) [64 FR 53900 at 59304]. In addition, Instruction 1 to Item 5 in Form 20–F provides that issuers should refer to the Commission's 1989 interpretive release on MD&A disclosure under Item 303 of Regulation S–K (Interpretive Release: Management's Discussion and Analysis of Financial Condition and Results of Operations; Certain Investment Company Disclosures, Release No. 33–6835 (May 18, 1989) [54 FR 22427] (the ''1989 Release'')) for guidance in preparing the discussion and analysis by management of the company's financial condition and results of operations required in Form 20–F. Therefore, although this release refers primarily to Item 303 of Regulation S–K, it also is intended to apply to MD&A drafted pursuant to Item 5 of Form 20–F.

In addition, the guidance in this release applies to small business issuers that are subject to the disclosure requirements of Items 303(b) and (c) of Regulation S–B. Small business issuers, like all other companies subject to SEC reporting obligations, should consider the interpretive guidance based on their own particular facts and circumstances.

[2] Item 303(a) of Regulation S–K [17 CFR 229.303(a)].

[3] *See* Commission Statement About Management's Discussion and Analysis of Financial Condition and Results of Operations, Release No. 33–8056 (Jan. 22, 2002) [67 FR 3746] (''January 2002 Release'').

[4] *See* Summary by the Division of Corporation Finance of Significant Issues Addressed in the Review of the Periodic Reports of the Fortune 500 Companies (Feb. 27, 2003) (''Fortune 500 Summary'') available at *www.sec.gov/divisions/corpfin/fortune500rep.htm.*

their disclosure so that the most important information is most prominent;

• Companies should avoid unnecessary duplicative disclosure that can tend to overwhelm readers and act as an obstacle to identifying and understanding material matters; and

• Many companies would benefit from starting their MD&A with a section that provides an executive-level overview that provides context for the remainder of the discussion.

We also emphasize the following points regarding focus and content:

• In deciding on the content of MD&A, companies should focus on material information and eliminate immaterial information that does not promote understanding of companies' financial condition, liquidity and capital resources, changes in financial condition and results of operations (both in the context of profit and loss and cash flows); [5]

• Companies should identify and discuss key performance indicators, including non-financial performance indicators, that their management uses to manage the business and that would be material to investors;

• Companies must identify and disclose known trends, events, demands, commitments and uncertainties that are reasonably likely to have a material effect on financial condition or operating performance; [6] and

• Companies should provide not only disclosure of information responsive to MD&A's requirements, but also an analysis that is responsive to those requirements that explains management's view of the implications and significance of that information and that satisfies the objectives of MD&A.

C. Impact of Increased Amounts of Information Available to Companies

Companies have access to and use substantially more detailed and timely information about their financial condition and operating performance than they did when our MD&A requirements initially were introduced or when we last provided general interpretive guidance.[7] Some of this information is itself non-financial in nature, but bears on companies' financial condition and operating performance. The increased availability of information is relevant to companies in preparing MD&A for the following reasons:

• First, companies must evaluate an increased amount of information to determine which information they must disclose. In doing so, companies should avoid the unnecessary information overload for investors that can result from disclosure of information that is not required, is immaterial, and does not promote understanding.

• Second, in identifying, discussing and analyzing known material trends and uncertainties, companies are expected to consider all relevant information, even if that information is not required to be disclosed.

D. Liquidity and Capital Resources

We devote a separate section of this release to disclosure in MD&A regarding liquidity and capital resources. In that section, we emphasize the need for attention to disclosure of cash requirements and sources of cash. We believe that:

• Companies should consider enhanced analysis and explanation of the sources and uses of cash and material changes in particular items underlying the major captions reported in their financial statements, rather than recitation of the items in the cash flow statements;

• Companies using the indirect method [8] in preparing their cash flow statements should pay particular attention to disclosure and analysis of matters that are not readily apparent from their cash flow statements; and

• Companies also should consider whether their MD&A should include enhanced disclosure regarding debt instruments, guarantees and related covenants.

E. Critical Accounting Estimates

Finally, we have included a separate section in this release regarding accounting estimates and assumptions that may be material due to the levels of subjectivity and judgment necessary to account for highly uncertain matters or the susceptibility of such matters to change, and that have a material impact on financial condition or operating performance. Companies should consider enhanced discussion and analysis of these critical accounting estimates and assumptions that:

• Supplements, but does not duplicate, the description of accounting policies in the notes to the financial statements; and

• Provides greater insight into the quality and variability of information regarding financial condition and operating performance.

F. Effect on Prior Commission Statements

This release does not modify existing legal requirements or create new legal requirements. Rather, we intend this release to assist companies in preparing MD&A by providing interpretive guidance and, in some cases, providing additional guidance in areas that the Commission has addressed previously. We do not believe that the guidance in this release conflicts with prior Commission guidance, nor is it our intention to alter any prior Commission guidance.

II. Background

The following is a chronology of certain prior Commission action regarding MD&A:

[5] In this release we sometimes use the term ''financial condition and operating performance'' to refer to the required subjects of MD&A of financial condition, liquidity and capital resources, changes in financial condition and results of operations (both in the context of profit and loss and cash flows).

[6] Note 27 to the 1989 Release states, ''MD&A mandates disclosure of specified forward-looking information, and specifies its own standards for disclosure—*i.e.*, reasonably likely to have a material effect. The specific standard governs the circumstances in which Item 303 requires disclosure. The probability/magnitude test for materiality approved by the Supreme Court in *Basic* v. *Levinson,* 108 S.Ct. 978 (1988), is inapposite to Item 303 disclosure.''

[7] *See, e.g., Improving Business Reporting—A Customer Focus; Meeting the Information Needs of Investors and Creditors,* Comprehensive Report of the Special Committee on Financial Reporting, American Institute of Certified Public Accountants (AICPA) (1994) (''Jenkins Report'').

[8] In Financial Accounting Standards Board (FASB) Statement of Financial Accounting Standards (SFAS) No. 95, *Statement of Cash Flows* (Nov. 1987), the FASB allowed the indirect method of reporting net cash flow from operating activities by adjusting net income to reconcile it to net cash flow from operating activities. Under that method, the major classes of operating cash receipts and payments are determined indirectly by determining the change in asset and liability accounts that relate to operating income. However, in SFAS 95, the FASB encouraged companies to use the direct method of reporting net cash flow from operating activities rather than the indirect method. The direct method reports net cash flow from operations by summing major classes of gross cash receipts, such as customer payments, and gross cash payments, such as cash paid to employees. The direct method also requires a reconciliation of net income to net cash flow from operating activities. The FASB gave its opinion that the direct method is ''the more comprehensive and presumably more useful approach.''

While this release refers primarily to U.S. GAAP, the underlying events and circumstances described in the release ordinarily will be applicable to foreign private issuers and should be discussed to the extent material. Consistent with the Instructions to Form 20–F, however, companies using that form should focus on the primary financial statements in their discussion and analysis in Item 5 (Operative and Financial Review Prospects). Also, companies are required to discuss in Item 5 of Form 20–F any aspects of the differences between foreign and U.S. GAAP that they believe are necessary for an understanding of the financial statements as a whole. *See* Instruction 2 to Item 5 of Form 20–F [17 CFR 249.220f].

1980—We adopted the present form of the disclosure requirements for MD&A.[9]

1981—We published the staff's interpretive guidance for MD&A after its review of disclosures that were prepared in accordance with the then-recently adopted disclosure requirements.[10]

1987—We sought public comment on the adequacy of MD&A and on proposed revisions submitted by members of the professional accounting community.[11]

1989—We published an interpretive release that addressed a number of disclosure matters that should be considered by companies in preparing MD&A.[12] The 1989 Release provided guidance in various areas, including required prospective information, analysis of long- and short-term liquidity and capital resources, material changes in financial statement line items, required interim period disclosure, segment analysis, participation in high-yield financings, highly leveraged transactions or non-investment grade loans and investments, the effects of federal financial assistance upon the operations of financial institutions and the disclosure of preliminary merger negotiations.

December 2001—As part of its process of reviewing financial and non-financial disclosures made by public companies, the Division of Corporation Finance announced that it would preliminarily review the annual reports filed in 2002 by the Fortune 500 companies, and undertake further review as appropriate, consistent with its selective review program. The focus of the project was to identify ''disclosure that appeared to be critical to an understanding of each company's financial position and results, but which, at least on its face, seemed to conflict significantly with generally accepted accounting principles [GAAP] or SEC rules, or to be materially deficient in explanation or clarity.''[13] As a result of this review, comment letters, many of which commented on companies' MD&A, were sent to more than 350 of the Fortune 500 companies. Earlier this year, the Division published a summary of the most frequent general areas of comment resulting from this review.[14]

December 2001—The Commission issued cautionary advice to companies regarding the need for greater investor awareness of the sensitivity of financial statements to the methods, assumptions, and estimates underlying their preparation. This cautionary advice encouraged public companies to include in their MD&A full explanations of their ''critical accounting policies,'' the judgments and uncertainties affecting the application of those policies, and the likelihood that materially different amounts would be reported under different conditions or using different assumptions.[15]

January 2002—After receiving a petition requesting additional MD&A interpretive guidance,[16] we issued a statement ''to suggest steps that issuers should consider in meeting their current disclosure obligations with respect to the topics described.''[17] The statement provided explicit interpretive guidance on certain MD&A topics considered material to an understanding of companies' operations. The topics addressed by the release were liquidity and capital resources (including off-balance sheet arrangements), trading activities involving non-exchange traded contracts accounted for at fair value, and relationships and transactions with persons or entities that derive benefits from their non-independent relationships with the company or the company's related parties.[18]

May 2002—We proposed additional MD&A disclosure requirements, which remain under consideration, regarding the application of companies' critical accounting estimates.[19]

January 2003—We adopted additional disclosure requirements regarding off-balance sheet arrangements and aggregate contractual obligations.[20] The new rules require the disclosure of off-balance sheet arrangements in a designated section of MD&A and an overview of certain known contractual obligations in a tabular format.[21]

We also have brought numerous enforcement actions based on alleged violations of MD&A requirements and will continue to bring such actions under appropriate circumstances.[22]

Based on recent experiences, we have determined that additional interpretive guidance regarding the requirements of MD&A will be useful to companies in enhancing overall disclosure under MD&A requirements.

III. Overall Approach to MD&A

A. The Presentation of MD&A

Since the introduction of our MD&A requirements, many companies have become larger, more global and more complex. At the same time, the combination of our rules and investors' demands have led to an increase in the number of subjects and matters addressed in MD&A. For these and other reasons, many companies' MD&A have become necessarily lengthy and complex. Unfortunately, the

[9] Final Rule: Amendments to Annual Report Form, Related Forms, Rules, Regulations, and Guides; Integration of Securities Acts Disclosure Systems, Release No. 33–6231 (Sept. 2, 1980) [45 FR 63630].

[10] Management's Discussion and Analysis of Financial Condition and Results of Operations, Release No. 33–6349 (Sept. 28, 1981) 23 SEC Docket 962 [Release not published in the **Federal Register**].

[11] Concept Release on Management's Discussion and Analysis of Financial Condition and Operations, Release No. 33–6711 (April 24, 1987) [52 FR 13715].

[12] 1989 Release.

[13] Fortune 500 Summary.

[14] *Id.*

[15] Cautionary Advice Regarding Disclosure About Critical Accounting Policies, Release No. 33–8040 (Dec. 12, 2001) [66 FR 65013] (''December 2001 Release'').

[16] On December 31, 2001 the Commission received a petition from Arthur Andersen LLP, Deloitte and Touche, LLP, Ernst & Young LLP, KPMG LLP and PricewaterhouseCoopers LLP. The American Institute of Certified Public Accountants endorsed the petition. A copy of the petition is available at *www.sec.gov/rules/petitions/petndiscl_12312001.htm.*

[17] *See* January 2002 Release.

[18] *Id.*

[19] Proposed Rule: Disclosure in Management's Discussion and Analysis About the Application of Critical Accounting Policies, Release No. 33–8098 (May 10, 2002) [67 FR 35620] (''2002 Critical Accounting Policies Proposal'').

[20] Final Rule: Disclosure in Management's Discussion and Analysis About Off-Balance Sheet Arrangements and Aggregate Contractual Obligations, Release No. 33–8182 (Jan. 28, 2003) [68 FR 5982] (''2003 Off-Balance Sheet Release'').

The overall guidance in this Interpretive Release is applicable to all MD&A discussions, including those related to off-balance sheet arrangements. As such, it should be applied to General Instruction B.(11) of Form 40–F and Item 303(c) of Regulation S–B, in addition to the other sections set out in note 1, above. We are not addressing specifically disclosures of off-balance sheet arrangements in this release, however, because we have little experience with companies' application of the new rules, which are effective for companies' registration statements, annual reports and proxy or information statements that are required to include financial statements for their fiscal years ending on or after June 15, 2003. Companies (other than small business issuers) must include the table of contractual obligations in registration statements, annual reports, and proxy or information statements that are required to include financial statements for the fiscal years ending on or after December 15, 2003. In addition, Section 401(c) of the Sarbanes-Oxley Act requires us to complete a study and report to the President and Congress next year on these types of disclosures.

[21] The tabular disclosure is not required for small business issuers by Item 303 of Regulation S–B.

[22] *See,* e.g., *In the Matter of Edison Schools, Inc.,* Release No. 34–45925 (May 14, 2002); *In the Matter of Sony Corporation and Sumio Sano,* Release No. 34–40305 (Aug. 5, 1998); *In the Matter of Bank of Boston Corp.,* Initial Decision Release No. 81 (Dec. 22, 1995); *In the Matter of Gibson Greetings, Inc., Ward A. Cavanaugh, and James H. Johnsen,* Release No. 34–36357 (Oct. 11, 1995); *In the Matter of America West Airlines, Inc.,* Release No. 34–34047 (May 12, 1994); *In the Matter of Salant Corporation and Martin F. Tynan,* Release No. 34–34046 (May 12, 1994); *In the Matter of Shared Medical Systems Corporation,* Release No. 34–33632 (Feb. 17, 1994); *In the Matter of Caterpillar Inc.,* Release No. 34–30532 (Mar. 31, 1992); *In the Matter of American Express Company,* Release No. 34–23332 (June 17, 1986).

presentation of the MD&A of too many companies also may have become unnecessarily lengthy, difficult to understand and confusing.

MD&A, like other disclosure, should be presented in clear and understandable language. We understand that complex companies and situations require disclosure of complex matters and we are not in any way seeking over-simplification or ''dumbing down'' of MD&A. However, we believe that companies can improve the clarity and understandability of their MD&A by using language that is clearer and less convoluted. We believe that efforts by companies to provide clearer and better organized presentations of MD&A can result in more understandable disclosure that does not sacrifice the appropriate level of complexity or nuance. In order to engender better understanding, companies should prepare MD&A with a strong focus on the most important information, provided in a manner intended to address the objectives of MD&A. In particular:

- Companies should consider whether a tabular presentation of relevant financial or other information may help a reader's understanding of MD&A. For example, a company's MD&A might be clearer and more concise if it provides a tabular comparison of its results in different periods, which could include line items and percentage changes as well as other information determined by a company to be useful, followed by a narrative discussion and analysis of known changes, events, trends, uncertainties and other matters. A reader's understanding of a company's fair value calculations or discounted cash flow figures also could, in some situations, be enhanced by providing a tabular summary of the company's various material interest and discount rate assumptions in one location.
- Companies should consider whether the headings they use assist readers in following the flow of, or otherwise assist in understanding, MD&A, and whether additional headings would be helpful in this regard.
- Many companies' MD&A could benefit from adding an introductory section or overview that would facilitate a reader's understanding. As with all disclosure, what companies would appropriately include in an introduction or overview will depend on the circumstances of the particular company. As a general matter, an introduction or overview should include the most important matters on which a company's executives focus in evaluating financial condition and operating performance and provide the context for the discussion and analysis of the financial statements. Therefore, an introduction or overview should not be a duplicative layer of disclosure that merely repeats the more detailed discussion and analysis that follows.
- While all required information must of course be disclosed, companies should consider using a ''layered'' approach. Such an approach would present information in a manner that emphasizes, within the universe of material information that is disclosed, the information and analysis that is most important. This presentation would assist readers in identifying more readily the most important information. Using an overview or introduction is one example of a layered approach. Another is to begin a section containing detailed analysis, such as an analysis of period-to-period information, with a statement of the principal factors, trends or other matters that are the principal subjects covered in more detail in the section.

We would expect a good introduction or overview to provide a balanced, executive-level discussion that identifies the most important themes or other significant matters with which management is concerned primarily in evaluating the company's financial condition and operating results. A good introduction or overview would:

- Include economic or industry-wide factors relevant to the company;
- Serve to inform the reader about how the company earns revenues and income and generates cash;
- To the extent necessary or useful to convey this information, discuss the company's lines of business, location or locations of operations, and principal products and services (but an introduction should not merely duplicate disclosure in the Description of Business section); and
- Provide insight into material opportunities, challenges and risks, such as those presented by known material trends and uncertainties, on which the company's executives are most focused for both the short and long term, as well as the actions they are taking to address these opportunities, challenges and risks.

Because these matters do not generally remain static from period to period, we would expect the introduction to change over time to remain current. As is true with all sections of MD&A, boilerplate disclaimers and other generic language generally are not helpful in providing useful information or achieving balance, and would detract from the purpose of the introduction or overview.

An introduction or overview, by its very nature, cannot disclose everything and should not be considered by itself in determining whether a company has made full disclosure. Further, the failure to include disclosure of every material item in an introduction or overview should not trigger automatically the application of the ''buried facts'' doctrine, in which a court would consider disclosure to be false and misleading if its overall significance is obscured because material is ''buried,'' such as in a footnote or an appendix.[23]

Throughout MD&A, including in an introduction or overview, discussion and analysis of financial condition and operating performance includes both past and prospective matters. In addressing prospective financial condition and operating performance, there are circumstances, particularly regarding known material trends and uncertainties, where forward-looking information is required to be disclosed. We also encourage companies to discuss prospective matters and include forward-looking information in circumstances where that information may not be required, but will provide useful material information for investors that promotes understanding.

B. The Content and Focus of MD&A

In addition to enhancing MD&A through the use of clearer language and presentation, many companies could improve their MD&A by focusing on the most important information disclosed in MD&A. Disclosure should emphasize material information that is required or promotes understanding and de-emphasize (or, if appropriate, delete) immaterial information that is not required and does not promote understanding.

Our MD&A requirements call for companies to provide investors and other users with material information that is necessary to an understanding of the company's financial condition and operating performance, as well as its prospects for the future.[24] While the desired focus of MD&A for a particular company will depend on the facts and circumstances of the company, some guidance about the content and focus of MD&A is generally applicable.

[23] *See, e.g.*, Final Rule: Plain English Disclosure, Release No. 33–7497 (Jan. 28, 1998) [63 FR 6370 at 6375] *(citing Gould* v. *American Hawaiian Steamship Company,* 331 F. Supp. 981 (D. Del. 1971); *Kohn* v. *American Metal Climax, Inc.,* 322 F. Supp. 1331 (E.D. Pa. 1970), *modified,* 458 F.2d 255 (3d Cir. 1972).)

[24] *See* 1989 Release, Part III.A.

1. Focus on Key Indicators of Financial Condition and Operating Performance

As discussed, one of the principal objectives of MD&A is to give readers a view of the company through the eyes of management by providing both a short and long-term analysis of the business.[25] To do this, companies should ''identify and address those key variables and other qualitative and quantitative factors which are peculiar to and necessary for an understanding and evaluation of the individual company.'' [26]

Financial measures generally are the starting point in ascertaining these key variables and other factors. However, financial measures often tell only part of how a company manages its business. Therefore, when preparing MD&A, companies should consider whether disclosure of all key variables and other factors that management uses to manage the business would be material to investors, and therefore required.[27] These key variables and other factors may be non-financial, and companies should consider whether that non-financial information should be disclosed.

Many companies currently disclose non-financial business and operational data.[28] Academics, authors, and consultants also have researched the types of information, outside of financial statement measures, that would be helpful to investors and other users.[29] Such information may relate to external or macro-economic matters as well as those specific to a company or industry. For example, interest rates or economic growth rates and their anticipated trends can be important variables for many companies. Industry-specific measures can also be important for analysis, although common standards for the measures also are important. Some industries commonly use non-financial data, such as industry metrics and value drivers.[30] Where a company discloses such information, and there is no commonly accepted method of calculating a particular non-financial metric, it should provide an explanation of its calculation to promote comparability across companies within the industry. Finally, companies may use non-financial performance measures that are company-specific.

In addition, if companies disclose material information (historical or forward-looking) other than in their filed documents (such as in earnings releases or publicly accessible analysts' calls or companion website postings) they also should evaluate that material information to determine whether it is required to be included in MD&A, either because it falls within a specific disclosure requirement or because its omission would render misleading the filed document in which the MD&A appears. We are not seeking to sweep into MD&A all the information that a company communicates. Rather, companies should consider their communications and determine what information is material and is required in, or would promote understanding of, MD&A.

Since we adopted the MD&A requirements, and even since the last comprehensive guidance on MD&A we released in 1989, there have been significant advancements in the ability to develop and access information quickly and effectively. Changes in business enterprise systems, communications and other aspects of information technology have significantly increased the amount of information available to management, as well as the speed with which they receive and are able to use information.[31] There is therefore a larger and more up-to-date universe of information, financial and non-financial alike, that companies have and should evaluate in determining whether disclosure is required. This situation presents companies with the challenge of identifying information that is required to be disclosed or that promotes understanding, while avoiding unnecessary information overload for readers by not disclosing a greater body of information, just because it is available, where disclosure is not required and does not promote understanding. Further, with advances in technology contributing to increasing amounts and currency of information, the factors relied upon by companies to operate and analyze the business may change. As this occurs, the discussion in MD&A should change over time to maintain an appropriate focus on material factors.

The focus on key performance indicators can be enhanced not only through the language and content of the discussion, but also through a format that will enhance the understanding of the discussion and analysis. The order of the information need not follow the order presented in Item 303 of Regulation S–K if another order of presentation would better facilitate readers' understanding. MD&A should provide a frame of reference that allows readers to understand the effects of material changes and events and known material trends and uncertainties arising during the periods being discussed, as well as their relative importance. To satisfy the objectives of MD&A, companies also should provide a balanced view of the underlying dynamics of the business, including not only a description of a company's successes, but also of instances when it failed to realize goals, if material. Good MD&A will focus readers' attention on these key matters.

2. Focus on Materiality

Companies must provide specified material information in their MD&A,[32] and they also must provide other material information that is necessary to make the required statements, in light of the circumstances in which they are

[25] *See, e.g.*, Release No. 33–6711 (Apr. 24, 1987) [52 FR 13715 at 13717] (''an opportunity to look at the company through the eyes of management by providing both a short and long-term analysis of the business of the company.'').

[26] 1989 Release, Part III.A (*citing* Release No. 33–6349 (Sept. 28, 1981) 23 SEC Docket 962 at 964 [Release not published in the **Federal Register**]).

[27] Examples of such other factors, depending on the circumstances of a particular company, can include manufacturing plant capacity and utilization, backlog, trends in bookings and employee turnover rates. *See, e.g., Quality, Transparency, Accountability,* Lynn E. Turner, Chief Accountant, Securities and Exchange Commission, Remarks before Financial Executives Institute (Apr. 26, 2001), available at *www.sec.gov/news/speech/spch485.htm.*

Companies should also consider disclosing information that may be peripheral to the accounting function, but is integral to the business or operating activity. Examples of such measures, depending on the circumstances of a particular company, can include those based on units or volume, customer satisfaction, time-to-market, interest rates, product development, service offerings, throughput capacity, affiliations/joint undertakings, market demand, customer/vendor relations, employee retention, business strategy, changes in the managerial approach or structure, regulatory actions or regulatory environment, and any other pertinent macroeconomic measures. Because these measures are generally non-financial in nature, we do not believe that their disclosure generally will raise issues under Item 10(e) of Regulation S–K [17 CFR 229.10(e)] or Item 10(h) of Regulation S–B [17 CFR 228.10(h)].

[28] *See Improving Business Reporting: Insights into Enhancing Voluntary Disclosures,* Steering Committee Report of the Business Reporting Research Project of the FASB (2001) available at www.fasb.org; the Jenkins Report; Financial Accounting Series Special Report, *Business and Financial Reporting, Challenges from the New Economy* (FASB) (2001) (''Special Report on Improving Business Reporting'').

[29] *See* Special Report on Improving Business Reporting.

[30] *See, e.g.*, the Jenkins Report; the Special Report on Improving Business Reporting.

[31] *See* the Jenkins Report.

[32] *See, e.g.*, Item 303(a)(1) of Regulation S–K [17 CFR 229.303(a)(1)] (requiring the identification of ''known trends or known demands, commitments, events or uncertainties that will result in or that are reasonably likely to result in the registrant's liquidity increasing or decreasing in any material way''). *See also* Item 303(a)(2)(i) of Regulation S–K [17 CFR 229.303(a)(2)(i)] (requiring a description of registrant's material commitments for capital expenditures).

made, not misleading.[33] MD&A must specifically focus on known material events and uncertainties that would cause reported financial information not to be necessarily indicative of future operating performance or of future financial condition.[34] Companies must determine, based on their own particular facts and circumstances, whether disclosure of a particular matter is required in MD&A. However, the effectiveness of MD&A decreases with the accumulation of unnecessary detail or duplicative or uninformative disclosure that obscures material information.[35] Companies should view this guidance as an opportunity to evaluate whether there is information in their MD&A that is no longer material or useful, and therefore should be deleted, for example where there has been a change in their business or the information has become stale.

As the complexity of business structures and financial transactions increase, and as the activities undertaken by companies become more diverse, it is increasingly important for companies to focus their MD&A on material information. In preparing MD&A, companies should evaluate issues presented in previous periods and consider reducing or omitting discussion of those that may no longer be material or helpful, or revise discussions where a revision would make the continuing relevance of an issue more apparent.

Companies also should focus on an analysis of the consolidated financial condition and operating performance, with segment data provided where material to an understanding of consolidated information. Segment discussion and analysis should be designed to avoid unnecessary duplication and immaterial detail that is not required and does not promote understanding of a company's overall financial condition and operating performance.

Both Instruction 4 to Item 303 of Regulation S–K and the 1989 Release address the requirement of discussion and analysis of changes in line items. A review of current MD&A provided by some companies, however, reveals that this is a portion of MD&A that can include an excessive amount of duplicative disclosure, as well as disclosure of immaterial items that do not promote understanding. The 1989 Release explicitly provides for the grouping of line items for purposes of discussion and analysis in a manner that avoids duplicative disclosure. In addition, Instruction 4 and the guidance in the 1989 Release do not require a discussion of every line item and its changes without regard to materiality. Discussion of a line item and its changes should be avoided where the information that would be disclosed is not material and would not promote understanding of MD&A.

Companies also must assess the materiality of items in preparing disclosure in their quarterly reports. There may be different quantitative and qualitative factors to consider when deciding whether to include certain information in a specific quarterly or annual report. The 1989 Release addresses some aspects of MD&A disclosure in the context of quarterly filings. That release clarifies that material changes to items disclosed in MD&A in annual reports should be discussed in the quarter in which they occur.[36] There also may be circumstances where an item may not be material in the context of a discussion of annual results of operations but is material in the context of interim results.

Disclosure in MD&A in quarterly reports is complementary to that made in the most recent annual report and in any intervening quarterly reports. Therefore, there may be cases, particularly where adequate disclosure is included in the MD&A in those earlier reports, where further disclosure in a quarterly report is not necessary. If, however, disclosure in those earlier reports does not adequately foreshadow subsequent events, or if new information that impacts known trends and uncertainties becomes apparent in a quarterly period, additional disclosure should be considered and may be required.

3. Focus on Material Trends and Uncertainties

One of the most important elements necessary to an understanding of a company's performance, and the extent to which reported financial information is indicative of future results, is the discussion and analysis of known trends, demands, commitments, events and uncertainties. Disclosure decisions concerning trends, demands, commitments, events, and uncertainties generally should involve the:

- Consideration of financial, operational and other information known to the company;
- Identification, based on this information, of known trends and uncertainties; and
- Assessment of whether these trends and uncertainties will have, or are reasonably likely to have, a material impact on the company's liquidity, capital resources or results of operations.

As we have explained in prior guidance, disclosure of a trend, demand, commitment, event or uncertainty is required unless a company is able to conclude either that it is not reasonably likely that the trend, uncertainty or other event will occur or come to fruition, or that a material effect on the company's liquidity, capital resources or results of operations is not reasonably likely to occur.[37] (In this release we sometimes use the term ''known material trends and uncertainties'' to describe trends, demands, commitments, events or uncertainties as to which disclosure is required.)

In identifying known material trends and uncertainties, companies should consider the substantial amount of

[33] *See* Securities Act Rule 408 [17 CFR 230.408], Securities Exchange Act of 1934 Section 10(b) [15 U.S.C. 78j(b)], Exchange Act Rule 10b–5 [17 CFR 240.10b–5], and Exchange Act Rule 12b–20 [17 CFR 240.12b–20]. *See also, In the Matter of Edison Schools, Inc.,* Release No. 34–45925 (May 14, 2002) (finding, among other things, that the company failed to provide accurate and complete disclosure about its reported revenues); *In the Matter of Sony Corporation and Sumio Sano,* Release No. 34–40305 (Aug. 5, 1998) (finding that the company violated Section 13(a) of the Exchange Act by making inadequate disclosures about the nature and the extent of Sony Pictures' net losses and their impact on the consolidated results Sony was reporting); *In the Matter of Caterpillar Inc.*, Release No. 34–30532 (Mar. 31, 1992) (finding failure to disclose the impact of a subsidiary's foreign operations on the company's results of operations violated Section 13(a) of the Exchange Act).

[34] Instruction 3 to Item 303(a) of Regulation S–K [17 CFR 229.303(a)].

[35] *See, e.g.*, Instruction 4 to Item 303(a) of Regulation S–K (indicating that repetition and line-by-line analysis is not required nor is it appropriate when the causes for a change in one line item also relate to other line items and indicating that, to the extent the changes from year to year are readily computable from the financial statements, the changes need not be recited in the discussion). The 1989 Release also addressed these points directly. *See* 1989 Release, Part III.D.

Where companies believe that information from the face of financial statements is helpful to readers in MD&A, they should consider using a tabular presentation that shows the decimal percentages of components or year-over-year percentage changes of the financial statement line items. An appropriate analysis of this data, to the extent that it is material, should accompany the tabular presentation consistent with the guidance in Section III.B.3 of this Release.

[36] *See* 1989 Release, Part III.E.

[37] *See* January 2002 Release at 3748 (''two assessments management must make where a trend, demand, commitment, event or uncertainty is known: 1. Is the known trend, demand, commitment, event or uncertainty likely to come to fruition? If management determines that it is not reasonably likely to occur, no disclosure is required. 2. If management cannot make that determination, it must evaluate objectively the consequences of the known trend, demand, commitment, event or uncertainty, on the assumption that it will come to fruition. Disclosure is then required unless management determines that a material effect on the registrant's financial condition or results of operations is not reasonably likely to occur'' (*citing* the 1989 Release)).

financial and non-financial information available to them, and whether or not the available information itself is required to be disclosed. This information, over time, may reveal a trend or general pattern in activity, a departure or isolated variance from an established trend, an uncertainty, or a reasonable likelihood of the occurrence of such an event that should be disclosed.

One of the principal objectives of MD&A is to provide information about the quality and potential variability of a company's earnings and cash flow, so that readers can ascertain the likelihood that past performance is indicative of future performance. Ascertaining this indicative value depends to a significant degree on the quality of disclosure about the facts and circumstances surrounding known material trends and uncertainties in MD&A. Quantification of the material effects of known material trends and uncertainties can promote understanding. Quantitative disclosure should be considered and may be required to the extent material if quantitative information is reasonably available.

As discussed in the 1989 Release, the disclosures required to address known material trends and uncertainties in the discussion and analysis should not be confused with optional forward-looking information. Not all forward-looking information falls within the realm of optional disclosure. In particular, material forward-looking information regarding known material trends and uncertainties is required to be disclosed as part of the required discussion of those matters and the analysis of their effects.[38] In addition, forward-looking information is required in connection with the disclosure in MD&A regarding off-balance sheet arrangements.[39]

4. Focus on Analysis

MD&A requires not only a ''discussion'' but also an ''analysis'' of known material trends, events, demands, commitments and uncertainties. MD&A should not be merely a restatement of financial statement information in a narrative form. When a description of known material trends, events, demands, commitments and uncertainties is set forth, companies should consider including, and may be required to include, an analysis explaining the underlying reasons or implications, interrelationships between constituent elements, or the relative significance of those matters.

Identifying the intermediate effects of trends, events, demands, commitments and uncertainties alone, without describing the reasons underlying these effects, may not provide sufficient insight for a reader to see the business through the eyes of management. A thorough analysis often will involve discussing both the intermediate effects of those matters and the reasons underlying those intermediate effects. For example, if a company's financial statements reflect materially lower revenues resulting from a decline in the volume of products sold when compared to a prior period, MD&A should not only identify the decline in sales volume, but also should analyze the reasons underlying the decline in sales when the reasons are also material and determinable. The analysis should reveal underlying material causes of the matters described, including for example, if applicable, difficulties in the manufacturing process, a decline in the quality of a product, loss in competitive position and market share, or a combination of conditions.

Similarly, where a company's financial statements reflect material restructuring or impairment charges, or a decline in the profitability of a plant or other business activity, MD&A should also, where material, analyze the reasons underlying these matters, such as an inability to realize previously projected economies of scale, a failure to renew or secure key customer contracts, or a failure to keep downtime at acceptable levels due to aging equipment. Whether favorable or unfavorable conditions constitute or give rise to the material trends, demands, commitments, events or uncertainties being discussed, the analysis should consist of material substantive information and present a balanced view of the underlying dynamics of the business.

If there is a reasonable likelihood that reported financial information is not indicative of a company's future financial condition or future operating performance due, for example, to the levels of subjectivity and judgment necessary to account for highly uncertain matters and the susceptibility of such matters to change, appropriate disclosure in MD&A should be considered and may be required. For example, if a change in an estimate has a material favorable impact on earnings, the change and the underlying reasons should be disclosed so that readers do not incorrectly attribute the effect to operational improvements. In addition, if events and transactions reported in the financial statements reflect material unusual or non-recurring items, aberrations, or other significant fluctuations, companies should consider the extent of variability in earnings and cash flow, and provide disclosure where necessary for investors to ascertain the likelihood that past performance is indicative of future performance. Companies also should consider whether the economic characteristics of any of their business arrangements, or the methods used to account for them, materially impact their results of operations or liquidity in a structured or unusual fashion, where disclosure would be necessary to understand the amounts depicted in their financial statements.

IV. Liquidity and Capital Resources

Our rules require companies to provide disclosure in the related categories of liquidity and capital resources.[40] This information is critical to an assessment of a company's prospects for the future and even the likelihood of its survival.[41] A company is required to include in MD&A the following information, to the extent material:

- Historical information regarding sources of cash and capital expenditures;
- An evaluation of the amounts and certainty of cash flows;
- The existence and timing of commitments for capital expenditures and other known and reasonably likely cash requirements;
- Discussion and analysis of known trends and uncertainties;
- A description of expected changes in the mix and relative cost of capital resources;
- Indications of which balance sheet or income or cash flow items should be considered in assessing liquidity; and
- A discussion of prospective information regarding companies' sources of and needs for capital, except where otherwise clear from the discussion.[42]

[38] *See* 1989 Release, Part III.B.

[39] In connection with our adoption of the off-balance sheet arrangements disclosure requirements, we eliminated a portion of the instructions in Item 303 of Regulation S–K that stated that registrants were not required to provide forward-looking information. Deleting that portion of the instructions did not affect requirements to provide forward-looking information in other circumstances where required or reduce the availability of any safe harbor for forward-looking information. *See also* 2003 Off-Balance Sheet Release. *See* Securities Act Section 27A [15 U.S.C. 77z–2], Securities Act Rule 175 [17 CFR 230.175], Exchange Act Section 21E [17 U.S.C. 78u–5], and Exchange Act Rule 3b–6 [17 CFR 240.3b–6].

[40] *See* Item 303(a)(1) and (2) of Regulation S–K [17 CFR 229.303(a)(1) and (2)].

[41] *See* January 2002 Release; 2003 Off-Balance Sheet Release.

[42] *See* 1989 Release, Part III.C. *See also* Item 303(a)(1) and (2) of Regulation S–K [17 CFR

Discussion and analysis of this information should be considered and may be required to provide a clear picture of the company's ability to generate cash and to meet existing and known or reasonably likely future cash requirements.

In determining required or appropriate disclosure, companies should evaluate separately their ability to meet upcoming cash requirements over both the short and long term.[43] Merely stating that a company has adequate resources to meet its short-term and/or long-term cash requirements is insufficient unless no additional more detailed or nuanced information is material. In particular, such a statement would be insufficient if there are any known material trends or uncertainties related to cash flow, capital resources, capital requirements, or liquidity.

A. Cash Requirements

In order to identify known material cash requirements, companies should consider whether the following information would have a material impact on liquidity (discussion of immaterial matters, and especially generic disclosure or boilerplate, should be avoided):

- Funds necessary to maintain current operations, complete projects underway and achieve stated objectives or plans;
- Commitments for capital or other expenditures;[44] and
- The reasonably likely exposure to future cash requirements associated with known trends or uncertainties, and an indication of the time periods in which resolution of the uncertainties is anticipated.

One starting point for a company's discussion and analysis of cash requirements is the tabular disclosure of contractual obligations,[45] supplemented with additional information that is material to an understanding of the company's cash requirements.[46]

For example, if a company has incurred debt in material amounts, it should explain the reasons for incurring that debt and the use of the proceeds, and analyze how the incurrence of that debt fits into the overall business plan, in each case to the extent material.[47] Where debt has been incurred for general working capital purposes, the anticipated amount and timing of working capital needs should be discussed, to the extent material.[48]

Companies should address, where material, the difficulties involved in assessing the effect of the amount and timing of uncertain events, such as loss contingencies, on cash requirements and liquidity. Any such discussion should be specific to the circumstances and informative, and companies should avoid generic or boilerplate disclosure. In addition, because of these difficulties and uncertainties, companies should consider whether they need to make or change disclosure in connection with quarterly as well as annual reports.

B. Sources and Uses of Cash

As with the discussion and analysis of the results of operations, a company's discussion and analysis of cash flows should not be a mere recitation of changes and other information evident to readers from the financial statements. Rather, MD&A should focus on the primary drivers of and other material factors necessary to an understanding of the company's cash flows and the indicative value of historical cash flows.

In addition to explaining how the cash requirements identified in MD&A fit into a company's overall business plan, the company should focus on the resources available to satisfy those cash requirements. Where there has been material variability in historical cash flows, MD&A should focus on the underlying reasons for the changes, as well as on their reasonably likely impact on future cash flows and cash management decisions. Even where reported amounts of cash provided and used by operations, investing activities or financing have been consistent, if the underlying sources of those cash flows have materially varied, analysis of that variability should be provided. The discussion and analysis of liquidity should focus on material changes in operating, investing and financing cash flows, as depicted in the statement of cash flows, and the reasons underlying those changes.

1. Operations

The discussion and analysis of operating cash flows should not be limited by the manner of presentation in the statement of cash flows.[49] Alternate accounting methods of deriving and presenting cash flows exist, and while they generally yield the same numeric result in the major captions, they involve the disclosure of different types of information. When preparing the discussion and analysis of operating cash flows, companies should address material changes in the underlying drivers (*e.g.* cash receipts from the sale of goods and services and cash payments to acquire materials for manufacture or goods for resale), rather than merely describe items identified on the face of the statement of cash flows, such as the reconciling items used in the indirect method of presenting cash flows.[50]

For example, consider a company that reports an overall increase in the components of its working capital other than cash[51] with the effect of having a material decrease in net cash provided by operations in the current period. If the increase in working capital was driven principally by an increase in accounts receivable that is attributable not to an increase in sales, but rather to a revised credit policy resulting in an extended payment period for customers, these facts would need to be addressed in MD&A to the extent material, along with the resulting decrease in cash provided by operations, if not otherwise apparent. In addition, if there is a material trend or uncertainty, the impact of the new credit policy on cash flows from operations should be disclosed.[52] While a cash flow statement prepared using the indirect method would report that various individual components of working capital increased or decreased during the

229.303(a)(1) and (2)], and Instructions 2 and 5 thereto.

[43] Short-term liquidity is defined as a period of twelve months or less and long-term is defined as a period in excess of twelve months. *See* 1989 Release, Part III.C. Note that the period of time over which a long-term discussion of liquidity is relevant is dependent upon the timing of the cash requirements of a company, as well as the period of time over which cash flows are managed. A vague reference to periods in excess of twelve months may not be sufficient.

[44] *See* Item 303(a)(2)(i) of Regulation S–K [17 CFR 229.303(a)(2)(i)].

[45] *See* Item 303(a)(5) of Regulation S–K [17 CFR 229.303(a)(5)].

[46] For example, the cash requirements for items such as interest, taxes or amounts to be funded to cover post-employment (including retirement) benefits may not be included in the tabular disclosure, but should be discussed if material.

[47] For example, debt may have been issued to fund the construction of a new plant, which will allow the company to expand its operations into a specific geographic area. Understanding that relationship and the expected commencement date of plant operations puts the cash requirement for the debt into an appropriate context to understand liquidity.

[48] Companies are reminded of their related disclosure obligations under Item 504 (Use of Proceeds) of Regulation S–K [17 CFR 229.504] and the requirement to update this disclosure in Item 701(f) (Use of Proceeds) of Regulation S–K [17 CFR 229.701(f)].

[49] *See* Instruction 4 to Item 303(a) of Regulation S–K [17 CFR 229.303(a)].

[50] See SFAS No. 95.

[51] Working capital is defined as current assets less current liabilities. *See* Chapter 3, AICPA Accounting Research Bulletin (ARB) No. 43, *Restatement and Revision of Accounting Research Bulletins* (June 1953).

[52] To the extent that this change also materially impacts results of operations, discussion and analysis would also be required in that section, but companies should attempt to avoid unnecessary or confusing duplication.

period by a specified amount, it would not provide a sufficient basis for a reader to analyze the change. If the company reports negative cash flows from operations, the disclosure provided in MD&A should identify clearly this condition, discuss the operational reasons for the condition if material, and explain how the company intends to meet its cash requirements and maintain operations. If the company relies on external financing in these situations, disclosure of that fact and the company's assessment of whether this financing will continue to be available, and on what terms, should be considered and may be required.

A company should consider whether, in order to make required disclosures, it is necessary to expand MD&A to address the cash requirements of and the cash provided by its reportable segments or other subdivisions of the business, including issues related to foreign subsidiaries, as well as the indicative nature of those results.[53] A company also should discuss the effect of an inability to access the cash flow and financial assets of any consolidated entities. For example, an entity may be consolidated but, because the company lacks sufficient voting interests or the assets are legally isolated, the company may be unable to utilize the entity's cash flow, cash on hand, or other assets to satisfy its own liquidity needs.

2. Financing

To the extent material, a company must provide disclosure regarding its historical financing arrangements and their importance to cash flows, including, to the extent material, information that is not included in the financial statements. A company should discuss and analyze, to the extent material:

- Its external debt financing;
- Its use of off-balance sheet financing arrangements;
- Its issuance or purchase of derivative instruments linked to its stock;
- Its use of stock as a form of liquidity; and
- The potential impact of known or reasonably likely changes in credit ratings or ratings outlook (or inability to achieve changes).

In addition to these historical items, discussion and analysis of the types of financing that are, or that are reasonably likely to be, available (or of the types of financing that a company would want to use but that are, or are reasonably likely to be, unavailable) and the impact on the company's cash position and liquidity, should be considered and may be required. For example, where a company has decided to raise or seeks to raise material external equity or debt financing, or if it is reasonably likely to do so in the future, discussion and analysis of the amounts or ranges involved, the nature and the terms of the financing, other features of the financing and plans, and the impact on the company's cash position and liquidity (as well as results of operations in the case of matters such as interest payments) should be considered and may be required.[54]

C. Debt Instruments, Guarantees and Related Covenants

There are at least two scenarios in which companies should consider whether discussion and analysis of material covenants related to their outstanding debt (or covenants applicable to the companies or third parties in respect of guarantees or other contingent obligations)[55] may be required.[56]

First, companies that are, or are reasonably likely to be, in breach of such covenants[57] must disclose material information about that breach and analyze the impact on the company if material. That analysis should include, as applicable and to the extent material:

- The steps that the company is taking to avoid the breach;
- The steps that the company intends to take to cure, obtain a waiver of or otherwise address the breach;
- The impact or reasonably likely impact of the breach (including the effects of any cross-default or cross-acceleration or similar provisions) on financial condition or operating performance; and
- Alternate sources of funding to pay off resulting obligations or replace funding.

Second, companies should consider the impact of debt covenants on their ability to undertake additional debt or equity financing. Examples of these covenants include, but are not limited to, debt incurrence restrictions, limitations on interest payments, restrictions on dividend payments and various debt ratio limits. If these covenants limit, or are reasonably likely to limit, a company's ability to undertake financing to a material extent, the company is required to discuss the covenants in question and the consequences of the limitation to the company's financial condition and operating performance. Disclosure of alternate sources of funding and, to the extent material, the consequences (including but not limited to the cost) of accessing them should also be considered and may be required.

D. Cash Management

Companies generally have some degree of flexibility in determining when and how to use their cash resources to satisfy obligations and make other capital expenditures. MD&A should describe known material trends or uncertainties relating to such determinations. For example, a decision by a company in a highly capital-intensive business to spend significantly less on plant and equipment than it has historically may result in long-term effects that should be disclosed if material. Material effects could include more cash, less interest expense and lower depreciation, but higher future repair and maintenance expenses or a higher cost base than the company would otherwise have.

V. Critical Accounting Estimates

Many estimates and assumptions involved in the application of GAAP have a material impact on reported financial condition and operating performance and on the comparability of such reported information over different reporting periods. Our December 2001 Release reminded companies that, under the existing MD&A disclosure requirements, a company should address material implications of uncertainties associated with the methods, assumptions and estimates underlying the company's critical accounting measurements.[58] In May 2002 we proposed rules, which remain under consideration, that would broaden the scope of disclosures beyond those currently required.[59]

When preparing disclosure under the current requirements, companies should consider whether they have made

[53] *See* Item 303(a) of Regulation S–K [17 CFR 229.303(a)].

[54] We believe that disclosure satisfying the requirements of MD&A can be made consistently with the restrictions of Section 5 of the Securities Act. *See, e.g.*, Securities Act Rules 135c [17 CFR 230.135c].

[55] *See* FASB Interpretation No. (FIN) 45, *Guarantor's Accounting and Disclosure Requirements for Guarantees, Including Indirect Guarantees of Indebtedness of Others* (Nov. 2002); 2003 Off-Balance Sheet Release; and the discussion *infra,* regarding off-balance sheet arrangements.

[56] *See In the Matter of America West Airlines, Inc.,* Release No. 34–34047 (May 12, 1994) (finding that the company failed to discuss uncertainties regarding its ability to comply with covenants).

[57] Companies also must take a similar approach to discussion and analysis with respect to mandatory prepayment provisions, ''put'' rights and other similar provisions.

[58] December 2001 Release.

[59] *See* 2002 Critical Accounting Policies Proposal.

accounting estimates or assumptions where:

- The nature of the estimates or assumptions is material due to the levels of subjectivity and judgment necessary to account for highly uncertain matters or the susceptibility of such matters to change; and
- The impact of the estimates and assumptions on financial condition or operating performance is material.

If so, companies should provide disclosure about those critical accounting estimates or assumptions in their MD&A.

Such disclosure should supplement, not duplicate, the description of accounting policies that are already disclosed in the notes to the financial statements. The disclosure should provide greater insight into the quality and variability of information regarding financial condition and operating performance. While accounting policy notes in the financial statements generally describe the method used to apply an accounting principle, the discussion in MD&A should present a company's analysis of the uncertainties involved in applying a principle at a given time or the variability that is reasonably likely to result from its application over time.

A company should address specifically why its accounting estimates or assumptions bear the risk of change. The reason may be that there is an uncertainty attached to the estimate or assumption, or it just may be difficult to measure or value. Equally important, companies should address the questions that arise once the critical accounting estimate or assumption has been identified, by analyzing, to the extent material, such factors as how they arrived at the estimate, how accurate the estimate/assumption has been in the past, how much the estimate/assumption has changed in the past, and whether the estimate/assumption is reasonably likely to change in the future. Since critical accounting estimates and assumptions are based on matters that are highly uncertain, a company should analyze their specific sensitivity to change, based on other outcomes that are reasonably likely to occur and would have a material effect. Companies should provide quantitative as well as qualitative disclosure when quantitative information is reasonably available and will provide material information for investors.

For example, if reasonably likely changes in the long-term rate of return used in accounting for a company's pension plan would have a material effect on the financial condition or operating performance of the company, the impact that could result given the range of reasonably likely outcomes should be disclosed and, because of the nature of estimates of long-term rates of return, quantified.

Amendments to the Codification of Financial Reporting Policies

The ''Codification of Financial Reporting Policies'' announced in Financial Reporting Release 1 (April 15, 1982) [47 FR 21028] is updated:

1. By adding to the following new sections to the Financial Reporting Codification from the release:

(III) Overall Approach to MD&A.

(IV) Liquidity and Capital Resources.

(V) Critical Accounting Estimates.

2. By revising the footnotes from those sections of the release which contain a short form citation to include the complete citation form rather than the short form.

3. By renumbering the footnotes from those sections of the release to run in the Financial Reporting Codification consecutively from number 1 through number 37.

The Codification is a separate publication of the Commission. It will not be published in the Code of Federal Regulations System.

List of Subjects in 17 CFR Parts 211, 231 and 241

Securities.

Amendments to the Code of Federal Regulations

■ For the reasons set forth above, the Commission is amending title 17, chapter II of the Code of Federal Regulations as set forth below:

PART 211—INTERPRETATIONS RELATING TO FINANCIAL REPORTING MATTERS

■ 1. Part 211, Subpart A, is amended by adding Release No. FR–72 and the release date of December 19, 2003 to the list of interpretive releases.

PART 231—INTERPRETATIVE RELEASES RELATING TO THE SECURITIES ACT OF 1933 AND GENERAL RULES AND REGULATIONS THEREUNDER

■ 2. Part 231 is amended by adding Release No. 33–8350 and the release date of December 19, 2003 to the list of interpretive releases.

PART 241—INTERPRETATIVE RELEASES RELATING TO THE SECURITIES EXCHANGE ACT OF 1934 AND GENERAL RULES AND REGULATIONS THEREUNDER

■ 3. Part 241 is amended by adding Release No. 34–48960 and the release date of December 19, 2003 to the list of interpretive releases.

Dated: December 19, 2003.

By the Commission.

Margaret H. McFarland,

Deputy Secretary.

[FR Doc. 03–31802 Filed 12–24–03; 8:45 am]

BILLING CODE 8010–01–P

Federal Register

Monday,
December 29, 2003

Part V

Environmental Protection Agency

40 CFR Part 451

Effluent Limitations Guidelines and New Source Performance Standards for the Concentrated Aquatic Animal Production Point Source Category; Notice of Data Availability; Proposed Rule

ENVIRONMENTAL PROTECTION AGENCY

40 CFR Part 451

[FRL–7602–5]

Effluent Limitations Guidelines and New Source Performance Standards for the Concentrated Aquatic Animal Production Point Source Category; Notice of Data Availability

AGENCY: Environmental Protection Agency (EPA).

ACTION: Notice of data availability.

SUMMARY: In 2002, EPA proposed technology-based effluent limitations and new source performance standards for the concentrated aquatic animal production (CAAP) point source category. The proposal applied to new and existing CAAP facilities that discharge pollutants directly to waters of the United States.

This notice summarizes the data received since proposal and describes how the Agency may use the data to address comments and develop the final rule. The notice also discusses refinements EPA may make to its methods for estimating costs, load reductions and financial impacts. It also presents revised results for these analyses reflecting the refinements and incorporating new data.

DATES: Submit comments on or before February 12, 2004.

ADDRESSES: Public comments regarding this document should be mailed to Water Docket, Environmental Protection Agency, Mailcode 4101T, 1200 Pennsylvania Avenue, NW., Washington, DC 20460, Attention Docket ID No. OW–2002–0026 (formerly W–02–01), or submitted electronically at *http://www.epa.gov/edocket*. For additional information on how to submit comments, *see* section B in the **SUPPLEMENTARY INFORMATION** section.

FOR FURTHER INFORMATION CONTACT: For technical information concerning today's proposed rule, contact Ms. Marta Jordan at (202) 566–1049. For economic information, contact Mr. Christopher Miller at (202) 566–0395.

SUPPLEMENTARY INFORMATION:

A. Regulated Entities

Entities potentially regulated by this action include:

Category	Examples of regulated entities	Primary NAICS codes
Industry and Government	Facilities engaged in concentrated aquatic animal production, which may include these sectors:	
	Finfish Farming and Fish Hatcheries	112511
	Other Animal Aquaculture	112519

This table is not intended to be exhaustive, but rather provides a guide for readers regarding entities likely to be regulated by this action. This table lists the types of entities that EPA is now aware could potentially be regulated by this action. Other types of entities not listed in the table could also be regulated. To determine whether your facility would be regulated by this action, you should carefully examine the applicability criteria in 40 CFR 451.1, 451.10, 451.20 and 451.30 of the proposed rule. If you have questions regarding the applicability of this proposed action to a particular entity, contact the person listed for technical information in the preceding **FOR FURTHER INFORMATION CONTACT** section.

B. How Can I Get Copies of This Document and Other Related Information?

1. *Docket.* EPA has established an official public docket for this action under Docket ID No. OW–2002–0026. The official public docket consists of the documents specifically referenced in this action, any public comments received and other information related to this action. Although a part of the official docket, the public docket does not include information as Confidential Business Information (CBI) or other information whose disclosure is restricted by statute. The official public docket is the collection of materials that is available for public viewing at the Water Docket in the EPA Docket Center, (EPA/DC) EPA West, Room B102, 1301 Constitution Avenue, NW., Washington, DC. The EPA Docket Center Public Reading Room is open from 8:30 a.m. to 4:30 p.m., Monday through Friday, excluding legal holidays. The telephone number for the Public Reading Room is (202) 566–1744, and the telephone number for the Water Docket is (202) 566–2426. For access to docket materials, please call ahead to schedule an appointment. Every user is entitled to copy 266 pages per day before incurring a charge. The Docket may charge 15 cents a page for each page over the page limit plus an administrative fee of $25.00.

2. *Electronic Access.* You may access this **Federal Register** document electronically through the EPA Internet under the ''**Federal Register**'' listings at *http://www.epa.gov/fedrgstr/*.

An electronic version of the public docket is available through EPA's electronic public docket and comment system, EPA Dockets. You may use EPA Dockets at *http://www.epa.gov/edocket/* to submit or view public comments, access the index listing of the contents of the official public docket, and to access those documents in the public docket that are available electronically. Once in the system, select ''search,'' then key in the appropriate docket identification number.

Certain types of information will not be placed in the EPA Dockets. Information claimed as CBI and other information whose disclosure is restricted by statute, which is not included in the official public docket will not be available for public viewing in EPA's electronic public docket. EPA's policy is that copyrighted material will not be placed in EPA's electronic public docket, but will be available only in printed, paper form in the official public docket. To the extent feasible, publicly available docket materials will be made available in EPA's electronic public docket. When a document is selected from the index list in EPA Dockets, the system will identify whether the document is available for viewing in EPA's electronic public docket. Although not all docket materials may be available electronically, you may still access any of the publicly available docket materials through the docket facility identified in Section B.1. EPA intends to work towards providing electronic access to all of the publicly available docket materials through EPA's electronic public docket.

For public commenters, it is important to note that EPA's policy is that public comments, whether submitted electronically or in paper, will be made available for public viewing in EPA's electronic public docket as EPA receives them and without change, unless the comment contains copyrighted material, information claimed as CBI, or other information whose disclosure is

restricted by statute. When EPA identifies a comment containing copyrighted material, EPA will provide a reference to that material in the version of the comment that is placed in EPA's electronic public docket. The entire printed comment, including the copyrighted material, will be available in the public docket.

Public comments submitted on computer disks that are mailed or delivered to the docket will be transferred to EPA's electronic public docket. Public comments that are mailed or delivered to the Docket will be scanned and placed in EPA's electronic public docket. Where practical, physical objects will be photographed, and the photograph will be placed in EPA's electronic public docket along with a brief description written by the docket staff.

For additional information about EPA's electronic public docket, visit EPA Dockets online or *see* 67 FR 38102, May 31, 2002.

C. How and To Whom Do I Submit Comments?

You may submit comments electronically, by mail, or through hand delivery/courier. To ensure proper receipt by EPA, identify the appropriate docket identification number in the subject line on the first page of your comment. Please ensure that your comments are submitted within the specified comment period. Comments received after the close of the comment period will be marked ''late.'' EPA is not required to consider these late comments. If you wish to submit information you claim as CBI or information that is otherwise protected by statute, please follow the instructions in Section D. Do not use EPA Dockets or e-mail to submit information you claim as CBI or information protected by statute.

1. *Electronically.* If you submit an electronic comment as prescribed below, EPA recommends that you include your name, mailing address, and an e-mail address or other contact information in the body of your comment. Also include this contact information on the outside of any disk or CD ROM you submit, and in any cover letter accompanying the disk or CD ROM. This ensures that you can be identified as the submitter of the comment and allows EPA to contact you in case EPA cannot read your comment due to technical difficulties or needs further information on the substance of your comment. EPA's policy is that EPA will not edit your comment, and any identifying or contact information provided in the body of a comment will be included as part of the comment that is placed in the official public docket, and made available in EPA's electronic public docket. If EPA cannot read your comment due to technical difficulties and cannot contact you for clarification, EPA may not be able to consider your comment.

i. *EPA Dockets.* Your use of EPA's electronic public docket to submit comments to EPA electronically is EPA's preferred method for receiving comments. Go directly to EPA Dockets at *http://www.epa.gov/edocket*, and follow the online instructions for submitting comments. To access EPA's electronic public docket from the EPA Internet Home Page, select ''Information Sources,'' ''Dockets,'' and ''EPA Dockets.'' Once in the system, select ''search,'' and then key in Docket ID No. OW–2002–0026. The system is an ''anonymous access'' system, which means EPA will not know your identity, e-mail address, or other contact information unless you provide it in the body of your comment.

ii. *E-mail.* Comments may be sent by electronic mail (e-mail) to *OW-Docket@epa.gov*, Attention Docket ID No. OW–2002–0026. In contrast to EPA's electronic public docket, EPA's e-mail system is not an ''anonymous access'' system. If you send an e-mail comment directly to the Docket without going through EPA's electronic public docket, EPA's e-mail system automatically captures your e-mail address. E-mail addresses that are automatically captured by EPA's e-mail system are included as part of the comment that is placed in the official public docket, and made available in EPA's electronic public docket.

iii. *Disk or CD-ROM.* You may submit comments on a disk or CD-ROM that you mail to the mailing address identified in Section C.2. These electronic submissions will be accepted in Word Perfect, Microsoft Word, or ASCII file format. Avoid the use of special characters and any form of encryption.

2. *By Mail.* Send an original and three (3) copies of your comments and enclosures as well as any references cited in your comments to: Water Docket, Environmental Protection Agency, Mailcode: 4101T, 1200 Pennsylvania Avenue, NW., Washington, DC 20460, Attention Docket ID No. OW–2002–0026.

3. *By Hand Delivery or Courier.* Deliver your comments to: Water Docket, EPA Docket Center, EPA West, Room B102, 1301 Constitution Avenue, NW., Washington, DC, Attention Docket ID No. OW–2002–0026. Such deliveries are only accepted during the Docket's normal hours of operation as identified in Section B.1.

D. How Should I Submit CBI to the Agency?

Do not submit information that you consider to be CBI electronically through EPA's electronic public docket or by e-mail. Send information identified as CBI by mail only to the following address: Engineering and Analysis Division, Mail Code 4303T, U.S. Environmental Protection Agency, 1200 Pennsylvania Ave., NW., Washington, DC 20460, Attention: Marta Jordan, Docket ID No. OW–2002–0026. For hand delivery or courier deliver the information to the Engineering and Analysis Division, EPA West, Room 6233M, 1301 Constitution Avenue, NW., Washington, DC, Attention: Marta Jordan, Docket ID No. OW–2002–0026.

You may claim information that you submit to EPA as CBI by marking any part or all of that information as CBI (if you submit CBI on disk or CD–ROM, indicate on the outside of the disk or CD–ROM that it contains information claimed as CBI and then identify electronically within the disk or CD–ROM the specific information that is CBI). Information so marked will not be disclosed except in accordance with procedures set forth in 40 CFR part 2.

In addition to one complete version of the comment that includes any information claimed as CBI, a copy of the comment that does not contain the information claimed as CBI must be submitted for inclusion in the public docket and EPA's electronic public docket. If you submit the copy that does not contain CBI on disc or CD–ROM, mark the outside of the disk or CD–ROM to clearly indicate that it does not contain CBI. Information not marked as CBI will be included in the public docket and EPA's electronic public docket without prior notice. If you have any questions about CBI or the procedures for claiming CBI, please consult the person identified in the **FOR FURTHER INFORMATION CONTACT** section.

E. What Should I Consider as I Prepare My Comments for EPA?

You may find the following suggestions helpful for preparing your comments:

1. Explain your views as clearly as possible.
2. Describe any assumptions that you used.
3. Provide any technical information and/or data you used that support your views.
4. If you estimate potential burden or costs, explain how you arrived at your estimate.

5. Provide specific examples to illustrate your concerns.

6. Offer alternatives.

7. Make sure to submit your comments by the comment period deadline identified.

8. To ensure proper receipt by EPA, identify the appropriate docket identification number in the subject line on the first page of your response. It would also be helpful if you provided the name, date, and **Federal Register** citation related to your comments.

Table of Contents

I. Purpose of This Document
II. New Data and Information
A. EPA site visits and sampling episodes
B. Monitoring and permit data from the permitting authorities
C. Information submitted with comments
D. Detailed survey results
E. Literature searches and other information collection activities
F. Holding time study
III. Summary of Comments and EPA's Preliminary Assessment
A. Representativeness of EPA's sampling database
B. Production systems
C. Drugs and chemicals
D. Non-native species
E. Water quality impacts from TSS, BOD, and nutrients
F. Best management practices
G. Proposed TSS limitations
H. Feed conversion ratios
I. Cost analyses
IV. Regulatory Options Considered for the Proposal and Modifications Being Considered for the Final Rule
A. Proposed regulatory options
B. Modifications being considered for the final rule
V. Revisions to the Cost, Loadings, Economic, and Benefits Models
A. Revisions to assumptions and methodology used in EPA's cost analyses
B. Revisions to assumptions and methodology used in loadings analyses
C. Revisions to assumptions and methodology used in economic analyses
D. Revisions to assumptions and methodology used in benefits analyses
VI. Revised Estimates of Costs and Economic Impacts
A. National cost estimates
B. Economic analysis
C. Cost-effectiveness and cost-reasonableness analysis
D. Small business analysis
VII. Solicitation of Comments
A. Alligator production
B. BMPs
C. Disposal of drugs and chemicals
D. Differentiating between warm and cold water species
E. Combining the proposed recirculating and flow-through subcategories into one subcategory
F. Revised economic impact methodology
G. Factoring unpaid labor charges in the impact analysis
H. Facilities excluded from the economic impact analysis

I. Purpose of This Document

Today's document has several purposes. First, EPA is summarizing new data and information we received during public comment on the proposed concentrated aquatic animal production (CAAP) regulations (67 FR 57872, September 12, 2002). The document also describes data EPA collected since it published the proposed rule. For example, EPA evaluated the data from detailed industry surveys, EPA's Permit Compliance System (PCS) database, Discharge Monitoring Reports (DMRs), National Pollutant Discharge Elimination System (NPDES) permits and the industry. This notice summarizes major issues raised in comments on the proposal and how the additional data and comments affect EPA's thinking on these issues. Finally, this document discusses possible changes in our methodology for estimating costs, removals, economic impacts, and benefits associated with the modified options, and includes revised estimates for costs, removals, and economic impacts.

Today's document includes six main components:

1. Discussion of new data and information.

2. Discussion of comments and EPA's preliminary assessments based upon these comments.

3. Possible Modifications to the Proposed Options and Technologies.

4. Possible Revisions to Costs, Loadings, Economic, and Benefits Models.

5. Revised Estimates of Costs, Loadings, and Economic Impacts.

6. Solicitation of Comments.

Through this NODA, EPA seeks further public comment on any and all aspects of the specific data and issues it has identified here. EPA continues to review the comments we received on the proposed rule and will address those comments and the comments submitted in response to this notice in the final action.

II. New Data and Information

This section provides a brief overview of new data from these general sources:

- EPA post-proposal sampling.
- National Pollutant Discharge Elimination System (NPDES) permits, permit fact sheets, and Discharge Monitoring Report (DMR) data for facilities that responded to the detailed survey.
- Information submitted with comments on the proposed rule.
- Detailed surveys of aquatic animal production (AAP) facilities.
- Literature searches.
- Data from a study that evaluated the effect of sample holding times on subsequent chemical analysis.

A. EPA Site Visits and Sampling Episodes

During the comment period and at the public meetings on the proposal, commenters raised concerns about the representativeness of the data EPA used as the basis for the proposed rule. In response to these concerns, EPA undertook additional wastewater sampling at a State trout hatchery using flow-through system technology (one of the technology options evaluated for the proposal) and visited 17 additional sites, including flow-through systems raising warm water species.

1. Sampling Episode

The facility selected for post-proposal wastewater sampling was a State hatchery in Pennsylvania producing cold water species (trout for stocking enhancement) using flow-through system technology. EPA considered this facility a good candidate for sampling because it used wastewater treatment similar to the treatment systems on which EPA based the proposed limitations. Those systems rely on primary settling of solids generated during cleaning of quiescent zones in an offline settling basin, and secondary settling of the primary effluent, and full or bulk flow from the raceways. Primary settling generally involves physical separation of particles through either quiescent zones and offline settling or a full-flow basin. Secondary settling is sequential solids removal after primary by using a second settling basin (*i.e.*, polishing pond) or a technology unit such as a microscreen. EPA considers this facility to be representative of a well operated facility with effective wastewater treatment. EPA sampled wastewater for five days at this facility during a time of year when the facility approached a maximum stocking density. For more information, refer to the sampling episode report for this facility (Document Control Number (DCN) 62386).

2. Site Visits

EPA selected 17 additional sites to visit based, in part, on public comments regarding specific gaps in the information EPA considered at proposal. Commenters raised concerns about the production of warm water aquatic animals and the use of green water production systems and the ability of these types of production facilities to achieve the proposed effluent limits. Commenters also raised concerns about EPA's assumptions concerning the application of

microscreen treatment to achieve proposed limits for Total Suspended Solids (TSS).

To address comments about the lack of representation of warm water and green water systems, EPA visited two facilities that use warm water culture systems and four facilities that use green water systems. Warm water culture systems refer to the culture of aquatic animals such as catfish, tilapia, or shrimp, that normally live in warmer water. These species can survive water temperatures that exceed 70–75°F for extended periods. Cold water species, such as salmonids, live and are cultured in much colder water and would become severely stressed or die in warmer water. Green water systems contain algae and zooplankton in the water with the cultured fish. Although most green water systems are warm water, some may be used for cold water species. Some green water systems are used to grow species, such as marine fish (*e.g.*, cod or flounder), crustaceans (*e.g.*, shrimp), and freshwater fish (*e.g.*, larval striped bass, walleye or yellow perch) that consume the algae and/or zooplankton as a major part of their diets. Other facilities use green water cultures to remove metabolic wastes from the aquatic animals in the process water. Green water systems could contain measurable amounts of TSS in effluents, primarily because of the plankton present in the culture water.

To address public comments about the effectiveness of microscreen treatment, especially in cold temperatures, EPA visited four facilities reporting the use of microscreen technology to treat wastewater. We chose these four facilities from a population of 13 facilities that reported in their responses to the detailed survey that they used microscreen technology as a primary or secondary solids removal treatment system. During the visits to these four facilities, EPA observed microscreens being used to remove solids from effluent streams. EPA also evaluated how these facilities incorporated microscreens into the daily operation and maintenance activities. *See* Section III.A. for further discussion of this issue.

Other facilities that EPA visited included several State and Federal hatcheries in California, Washington, Idaho, Pennsylvania, and Utah. EPA looked at the differences in mission, operation, and management of government facilities compared to commercial facilities.

B. Monitoring and Permit Data From the Permitting Authorities

To further assess facilities with NPDES permits, EPA asked the EPA regional offices for updated copies of permits, fact sheets, and DMR data for many of the 125 facilities. EPA evaluated NPDES permits and DMR data for 43 of the 125 facilities identified as having a NPDES permit. EPA used the detailed surveys and NPDES permit information to identify discharge points and the nature of discharges (*e.g.*, full flow from raceways or solids collection decant water) in the DMR data.

To better evaluate the quality of current facility discharges compared to the proposed limits, EPA used the detailed surveys to determine the number of facilities reporting NPDES permits. Of the 203 facilities that responded to the detailed survey, EPA found 125 potentially in-scope facilities (*i.e.*, facilities that are subject to the proposed regulation) with existing NPDES permits. The facilities with NPDES permits use these systems:

- 108 flow-through systems.
- 6 recirculating systems.
- 8 pond systems.
- 3 mixed flow-through and recirculating systems.

EPA found that 78 facilities did not report having NPDES permits,

- 9 facilities that are not discharging or indirectly discharge.
- 9 net pen facilities.
- 25 pond facilities.
- 4 recirculating system facilities.
- 31 flow-through system facilities.

Many of these facilities are not subject to existing requirements for NPDES permits (*i.e.*, ponds that discharge less than 30 days, warm water facilities producing less than 100,000 pounds, and cold water facilities producing less than 20,000 pounds).

EPA was primarily interested in getting information on the permit requirements and effluent monitoring data to better assess the baseline performance of facilities (*i.e.*, current effluent treatment conditions) that are in-scope for the proposed regulation. A listing of the NPDES permit numbers for the facilities identified for additional data gathering is available in the record (see DCN 70264). See Section III.G. for discussion of the analysis on the NPDES permits and DMR data.

EPA was also interested in getting information about best management practices (BMPs) required in NPDES permits to compare with the BMPs required in the proposed regulation. For those facilities that have BMP requirements in the NPDES permit, EPA observed that the requirements were primarily related to developing overall facility BMP plans and to practices that addressed drugs and chemicals.

C. Information Submitted With Comments

In the proposal, EPA asked for data and information from commenters. EPA received about 300 public comments on the proposed rule. A wide range of stakeholders representing Federal, State, and local government agencies, industry associations, environmental groups, individual facilities, and members of the public provided comments. Comments addressed many aspects of the proposed regulation and EPA's supporting analysis, including scope of the rule, environmental impacts, regulatory authority, cost, economic impact, and benefit analyses. In some cases, commenters submitted supporting materials (in the form of engineering, economic, scientific, or regulatory reports or journal articles; data summaries or compilations of engineering, economic, scientific, or regulatory data; or references to such information). *See* Section 7.5 of the Public Docket for this rulemaking for these materials.

The comments included information on the costs associated with flow-through systems for the structural, labor, and land components described in each proposed flow-through option. In preparing this notice, EPA used this cost information to help fill gaps in the detailed survey data and to better understand industry diversity. EPA plans to use this additional cost information in refining its estimates of compliance costs for the final rule. The Agency included this information in developing the revised cost estimates presented in this notice. You can find non-confidential cost information in Section 6.5.3 of the public record. Several comments provided monitoring data, used in conjunction with the DMR data described in Section II.B.

The Joint Subcommittee on Aquaculture (JSA) has a task force known as the Aquaculture Effluents Task Force (AETF) that concentrates on the effluent guidelines efforts. The AETF is a group of interested parties representing Federal, State and local governments, academia, industry and environmental organizations. The AETF submitted detailed comments on aspects of the proposed rule such as the use of drugs and chemicals, production systems, costs and economic analyses. In response to EPA's follow-up requests, the AETF provided additional information, primarily papers that were referenced by their comments, or that supported statements made in their

comments. Reviewers can find this additional information at DCN 45232 and we cited it often in this notice.

Additional information included:

- References documenting the presence of viral hemorrhagic septicemia in west coast salmonids.
- Documents on the fate and environmental effects of copper sulfate as a treatment for catfish ponds.
- Feed conversion rates including the effect that feed formulation has on the excretion and discharge of various pollutants.
- Information on BMPs and permit requirements for net pen systems.
- Information on the economic impacts of additional costs for aquatic animal production to the farm operations and nearby communities.

This notice also addresses questions and concerns raised during three public meetings on the proposed rule held in late October to mid-November of 2002. EPA used the public meetings to update the public on the status of the CAAP effluent guidelines and to discuss the proposal. Several attendees submitted comments to EPA after the meetings. DCNs 40520, 40521, 40522 summarize the discussions and comments at those meetings.

D. Detailed Survey Results

In August 2001, EPA mailed about 6,000 screener surveys to aquatic animal production facilities. EPA received responses from 4,900 facilities, of which about 2,300 facilities reported that they produce aquatic animals. EPA based its proposed regulations on the data collected from the screener questionnaire.

Consistent with EPA's intentions described in the preamble to the proposed rule, EPA based its analyses for this notice on data collected from the detailed questionnaire. The preamble described the detailed questionnaire (DCN 62452) and EPA's plans to recalculate estimates for costs and benefits associated with the proposed regulatory options. The preamble also stated that the Agency would describe these data and analyses in this notice. (67 FR 57881, September 12, 2002). EPA reviewed the responses from the detailed questionnaire, performed follow-up activities on the detailed questionnaires resulting from inconsistencies or questions from an initial review of responses, and completed analyses of the data contained in these responses. This section describes the facilities that EPA selected to receive the detailed questionnaire and those that responded.

EPA used the screener responses to select a stratified random sample to receive the detailed questionnaire. Sample criteria were designed to primarily capture facilities that produce aquatic animals and are likely to be covered by the proposed rule. EPA also developed sample criteria to capture facilities that are out of scope (based on information in the screener survey) to validate its assumptions about the applicability of the proposed regulation. For example, the sample criteria includes facilities with ponds, which are out of scope in the proposed regulation, to confirm that additional regulations for ponds are unnecessary. The Technical Development Document (TDD), page A11, describes in detail the criteria and includes facilities that are in-scope and out of scope. The facilities selected met one of these criteria:

- Aquariums.
- Production includes alligators and total biomass exceeds 100,000 pounds.
- Production includes trout or salmon and total biomass exceeds 20,000 pounds.
- Predominant production method is ponds; predominant species is catfish; and total biomass exceeds 2,200,000 pounds.
- Predominant production method is ponds; predominant species is shrimp, tilapia, other finfish, or hybrid striped bass; and total biomass exceeds 360,000 pounds.
- Predominant production method is any method except ponds, and total biomass exceeds 100,000 pounds.

Applying these criteria resulted in 539 facilities from the screener questionnaire responses with these characteristics. We then classified the 539 facilities into 44 groups defined by facility type (commercial, government, research, or tribal), the predominant species, and predominant production. A sample was drawn from the 539 facilities ensuring sufficient representation of facilities in each of the 44 groups. The sample drawn consisted of 263 facilities. From these 263 facilities EPA excluded 11 facilities that were duplicates on the mailing list or, after revising production estimates, did not meet the production thresholds for a CAAP facility. Detailed questionnaires were finally sent to 252 facilities.

EPA received responses on 215 of the 252 questionnaires. A few responses contained information on more than one facility. Subsequently, EPA separated that information into several questionnaires so that a single questionnaire represented an individual facility. EPA also excluded data from 12 facilities that returned incomplete responses. Because these facilities would not have been subject to the proposed limitations, EPA did not ask for more information. After separating multiple responses and excluding incomplete responses, information is available from 205 facilities. Table II.D.1, Questionnaire Summary, provides a breakdown of this information.

TABLE II.D.1.—QUESTIONNAIRE SUMMARY

Information identifier	Number of questionnaires
Sample frame	263
Mailed	252
Received	215
Incomplete and not followed-up	12
Received and usable	203
Received and usable + separated	205

Because we selected the 205 facilities using a statistical design (see Appendix A of the Technical Development Document for more information), the responses allowed us to build a database to be used for estimating population characteristics reflecting the above criteria. For national (*i.e.*, population) estimates, EPA applied survey weights to the facility responses that incorporate the statistical probability of a particular facility being selected to receive the detailed questionnaire and adjust for non-responses. (The response rate was about 80 percent for the detailed questionnaire. Appendix A of the proposed TDD addresses the non-response adjustments for the screener questionnaire.) In this case, a survey weight of 3 means that the facility represents itself and two others in the population. EPA will continue its analysis to refine the survey weights for the detailed questionnaire.

From the sample for the detailed survey, EPA estimated the distribution of facilities by: production systems, ownership type, species produced, and geographic regions. We describe the distribution here and in Tables II.D.2, II.D.3, II.D.4, and II.D.5.

For production systems, EPA estimates that 14 percent of the surveyed population use multiple production system types, 70 percent use flow-through systems, 11 percent use ponds, 3 percent use recirculating systems, and 2 percent use net pens.

For ownership type, EPA estimates that 34 percent of the surveyed population are State-owned facilities, 14 percent are Federal facilities, 1 percent are academic facilities, 2 percent are Tribal facilities, 1 percent are private non-profit facilities, and 48 percent are private commercial facilities.

For species produced, EPA estimates that 78 percent of the surveyed population grow trout and/or salmon, 11 percent grow catfish, 3 percent grow tilapia, 2 percent grow striped/hybrid bass, 1 percent grow shrimp, 5 percent grow ''other'' species such as walleye, sturgeon, sunfish, ornamentals, baitfish. We estimate that about 16 percent of the population produce more than one species.

For geographic regions, EPA found that the surveyed population is widely distributed throughout the United States. We estimate that 10 percent of the population are located in Region 1, 1 percent in Region 2, 6 percent in Region 3, 16 percent in Region 4, 13 percent in Region 5, 8 percent in Region 6, 5 percent in Region 7, 11 percent in Region 8, 11 percent in Region 9, and 19 percent in Region 10.

TABLE II.D.2.—PRODUCTION SYSTEMS

Production system	Percentage of facilities
Flow-through	70
Recirculating	3
Ponds	11
Net Pens	2
Multiple production systems	14

TABLE II.D.3.—OWNERSHIP TYPE

Ownership type	Percentage of facilities
State governments	34
Federal facilities	14
Academic facilities	1
Tribal facilities	2
Private non-profit	1
Private commercial	48

TABLE II.D.4.—SPECIES IDENTIFIED AT FACILITY IN SURVEY SAMPLE

Species*	Percentage of facilities
Trout/Salmon	78
Catfish	11
Tilapia	3
Hybrid Striped Bass	2
Shrimp	1
Other (walleye, sturgeon, sunfish, etc.)	5

*Based on predominant species, facility may produce more than one species.

TABLE II.D.5.—GEOGRAPHICAL DISTRIBUTION

EPA region	Percentage of facilities
1 (CT, ME, MA, NH, RI, VT)	10
2 (NJ, NY, PR, VI)	1
3 (DE, DC, MD, PA, VA, WV)	6
4 (AL, FL, GA, KY, MS, NC, SC, TN)	16
5 (IL, IN, MI, OH, WI)	13
6 (AR, LA, NM, OK, TX)	8
7 (IA, KS, MO, NE)	5
8 (CO, MT, ND, SD, UT, WY)	11
9 (AZ, CA, HI, NV, AS, GU)	11
10 (AK, ID, OR, WA)	19

Although EPA received and used responses from 205 surveys for various analyses, we use only a subset to estimate national CAAP costs for the industry sectors affected by the proposed rule. From the cost analyses, we excluded eight responses from facilities that discharge indirectly or do not discharge, because these facilities are not affected by the rule. For salmon net pens, the detailed questionnaire responses confirmed our assumptions at proposal (*i.e.*, no costs would be incurred in eight net pen facilities as a result of the proposed option). EPA will continue to evaluate cost and impacts for other net pen systems. We excluded pond data from the costs analyses because ponds were not within the scope of the proposed rule. However, EPA is using the pond information from 33 detailed questionnaires to validate assumptions on the applicability of the proposed regulation to ponds. EPA generated cost and loadings information for 13 facilities, but we excluded these from the economic analysis because the facilities produced less than 20,000 pounds of aquatic animals per year. As a result of these exclusions, EPA used the data from 143 facilities in its costs and loading analyses to evaluate economic impacts presented in this notice.

E. Literature Searches and Other Information Collection Activities

EPA continued to collect technical, scientific, and regulatory information from many sources on key issues about the CAAP industry, including those described in the preceding subsections of Section II of today's notice. In some cases, EPA started targeted literature searches or other types of investigations to assess issues raised by stakeholders and commenters (*see* Section III for a summary of major issues raised in comments). Several of these efforts are:

1. Net Pens

EPA received several comments about the relative significance of environmental impacts from net pen operations, as well as whether or not there is a need to establish requirements to mitigate environmental impacts (*see* Section III.B.2. of today's notice). To address these comments, EPA is updating its literature evaluation for net pen impacts and current practices and requirements. We placed a draft preliminary reference list in the public record (DCN 62399). EPA is examining new and re-examining previously available literature on the environmental impacts of discharges of solids, nutrients, BOD, and drugs and chemicals from net pen facilities. This updated literature search will examine existing permit requirements and other practices used by net pen facilities. This new information will improve EPA's understanding of environmental concerns with net pen systems and the actual impacts of present-day operations in the U.S., in light of existing State requirements and industry practices. However, current EPA analysis indicates that practices to minimize solids released at most net pen facilities are at least as stringent as the requirements we are considering. EPA does not expect further reductions in solids and pollutants associated with solids from net pens to result from this rule.

2. Chemicals, Including Therapeutants, Used at CAAP Facilities

EPA also received comments about the application of chemicals, including therapeutic substances, at CAAP facilities. These comments address:

- Antibiotics (residues in fish, antibiotic resistance, estimated volumes of antibiotic use in the U.S. CAAP industry).
- Regulatory authority and need for action (asserting that EPA should or should not include requirements about the use of chemicals, including therapeutants, at CAAP facilities; that FDA, American Veterinary Medical Association, and other entities' requirements or guidelines already ensure environmental safety of therapeutant applications).
- Chemicals in fish feed (including color additives).

These comments are further discussed in Section III.C. In some cases, supporting materials and referenced literature were also provided to EPA.

To address these comments, EPA is updating its literature search about environmental fate and effects studies of chemicals/therapeutic substances

reported in the public comments, detailed surveys, and literature as used at CAAP facilities in the U.S. These chemical/therapeutic substances include anaesthetics, antibiotics, pesticides, antifungals, disinfectants, algicides, antifoulants, feed additives, and hormones used under EPA-approved, FDA-approved, and veterinary prescribed extra-label use, and FDA's investigational new animal drug (INAD) provisions. For several of the more commonly used substances, EPA collected information on quantities used from the detailed survey and industry-supplied data. EPA also has environmental assessments from the FDA docket for oxytetracycline, formalin, Romet, and canthaxanthin (see DCNs 40417, 40477, 40492, 40567). In addition, EPA obtained and is evaluating studies of the fate and effects of these chemical/therapeutic substances, when available. We placed a draft preliminary reference list in the public record (DCN 62454). EPA will work with appropriate internal and external experts to interpret these studies.

Second, EPA met with FDA to clarify FDA's environmental assessment requirements for the substances over which FDA has jurisdiction (DCN 31126). EPA met with USDA's Animal and Plant Health Inspection Service (APHIS) to discuss how the requirements and objective of the CAAP rule relate to authorities under their jurisdiction (DCN 31123). At the meeting, USDA discussed the Animal Health Protection Act (''2002 Farm Bill''), which gives APHIS the authority to develop and implement aquatic animal health programs. This law gives authority to APHIS for aquatic farm-raised animal disease management including emergency responses actions to invasive pathogen outbreaks. APHIS is also authorized to implement control programs using drugs or chemicals and biosecurity practices to reduce disease risk and impact on the industry.

EPA is also reviewing, industry and professional association guidelines on using antimicrobial agents responsibly (*e.g.*, DCN 70720). EPA will continue to work closely with the JSA National Aquatic Animal Health Task Force and other Federal, State, and scientific experts to better understand the relationships between current technical and regulatory aspects of chemical applications at CAAP facilities and EPA's proposed requirements.

3. Non-Native Species

EPA also received comments about non-native species (described in more detail in Section III.D). Briefly, comments included:

- Arguments supporting or opposing the establishment of controls on non-native species.
- EPA's regulatory involvement with non-native species issues.
- Specific scientific information to correct or supplement data on potential impacts of CAAP non-native species that EPA considered in developing the proposed rule.
- Descriptions of specific Federal, State, local, or industry requirements and programs to reduce or mitigate non-native concerns at CAAP facilities.

First, EPA is evaluating the comments and the supplementary literature submitted with them. Second, we continue our dialogue with Federal agencies that set policy for non-native species to facilitate coordination among relevant programs. EPA met with the APHIS, which has a broad mandate to address import and interstate movement of exotic species under the Federal Plant Pest Act and the Plant Quarantine Act (DCN 31123). EPA is also communicating with the National Invasive Species Council (NISC) regarding the non-native species aspects of the CAAP rule. Third, as some commenters urged, EPA is also more closely examining State, regional, and other requirements and programs designed to reduce or mitigate concerns about non-native species and that may already apply to facilities within the scope of the CAAP rule. One source of information of which EPA has become aware since proposal is the Environmental Law Institute's August 2002—*Halting the Invasion—State Tools for Invasive Species Management.* This publication analyzes legal tools available at the State level to address non-native species (including aquatic invasive species), identifies critical components of such tools and discusses examples of effective programs. The document also describes specific legal tools in each State (DCN 40637).

EPA is also considering supplemental information provided by members of the National Association of State Aquaculture Coordinators (NASAC). NASAC gave EPA a summary of information from their members regarding non-native species requirements and State regulating agencies (DCN 40607). Several States recognize and actively implement measures to address potential risks about non-native aquatic species. For example, the California Department of Fish and Game (CDFG) instituted several requirements to prevent the introduction of non-native species into bodies of water and to prevent the dissemination of fish diseases and parasites to wild populations and cultured stocks (DCNS 40593, 40594). A forthcoming report (*Non-native Oysters in the Chesapeake Bay*) by the National Research Council (NRC) may also provide insight into the effectiveness of existing regulations and programs, and recommendations for more effective approaches to non-native species issues (DCN 62456). While this study targets an industry sector EPA is not proposing to regulate (molluscan shellfish), certain discussions and findings regarding approaches for addressing non-native species concerns may be informative.

EPA has identified several non-North American species currently raised at CAAP facilities that might pose an environmental threat if they were to escape and become established (*e.g.*, several species commonly referred to as tilapia) (DCN 40649). To identify species of interest, EPA reviewed the database of facility responses to EPA's 2001 screener survey (DCN 10001). The database includes information on facility location and species raised for each of over 2,300 respondents who produce aquatic animals. Although this is a much larger population than the facilities covered by the proposed rule, EPA used this information to identify general trends in the production of non-native fish that could become invasive. EPA compared species and facility location with a State-by-State list of invasive fish derived from the United States Geologic Survey (USGS) (Fuller *et al.*, 1999).

We faced several challenges with using this information for our evaluation. Most of the facilities contained in the screener survey database did not provide enough taxonomic detail to determine if cultured species were non-native and potentially invasive. In several cases where we had enough taxonomic detail, the species being cultured had already been widely introduced throughout North America. In addition, several facilities in the database raise fish hybrids, and evaluating the invasive potential of hybrids poses a unique challenge because the characteristics may not be a simple blending of parent species' characteristics. Genetic effects may influence the ecological niche of a hybrid, making it difficult to predict its possible geographic distribution. Such genetic effects include dominance, polygenic inheritance (where traits are influenced by the cumulative effects of multiple genes), epistasis (where one gene influences the expression of another), and pleiotropy (where a single gene influences the multiple traits).

For several of these species, EPA is using an ecological niche model (DCN 40650) to predict their possible geographic distributions in the United States. EPA is also examining the geographic distribution of CAAP facilities raising these non-North American species, potential habitat for these species, and existing requirements (*e.g.*, those contained in State regulations) for reducing escapes of non-natives that already apply to CAAP facilities producing non-natives. There are many limitations on data in such an evaluation (*e.g.*, limited information on escape rates, the likelihood of escapes, and the consequences of escapement), but this analysis provides some insight into the scope of non-native species concerns at CAAP facilities. EPA will consider this analysis as one factor to assess the need, if any, for reporting, BMP implementation, or other requirements regarding non-native species in the final regulation. You can find a draft memorandum describing EPA's preliminary analysis in the record for this notice (DCN 40649). EPA will continue to collect and evaluate data to assess concerns associated with escaped non-native aquatic animals from CAAP facilities and the effectiveness of technologies and management practices to prevent animals from escaping in the effluents from CAAP facilities.

Finally, EPA is also performing literature searches to collect examples of risk and cost-benefit analyses that have been performed for non-native or invasive species. Such analyses include:

- Leung, B., D.M. Lodge, D. Finoff, J.F. Shogren, M.A. Lewis, and G. Lamberti. 2002. ''An ounce of prevention or a pound of cure: bioeconomic risk analysis of invasive species.'' *Proceedings of the Royal Society of London, Series B 269:* 2407–2413. This paper describes a quantitative modeling framework to analyze risks from non-indigenous species to economic activity and the environment. The model identifies the best allocation of resources to prevention vs. control, acceptable invasion risks and consequences of invasion to optimal investments. The paper reports on an application of this model to a non-CAAP invasive species (zebra mussels), but the quantitative and systematic risk analysis approach may be useful for its examples (DCN 40568).
- Kolar, C.S. and D.M. Lodge. 2002. ''Ecological predictions and risk assessment for alien fishes in North America.'' *Science* 298: 1233–1236. This paper uses a risk assessment approach and statistical models of fish introductions into the Great Lakes to develop a quantitative approach for targeting prevention efforts on species most likely to cause damage (DCN 40569).
- **Federal Register**. 2003. Ballast Water Management Program for U.S. Waters, proposed rule. 68 FR 44691–44696. The U.S. Department of Homeland Security/Coast Guard recently proposed mandatory ballast water management practices for vessels equipped with ballast tanks to address possible threats to marine and freshwater resources, biological diversity, and coastal infrastructures from unintentional introduction of nonindigenous species. The Coast Guard performed a regulatory evaluation including an estimate of the proposed rule's effects on invasion rates. The regulatory evaluation also included monetized damages from invasions, but did not attempt to monetize the benefits of their proposed rule (DCN 40570).

These examples describe tools that could potentially be used to assess risks and benefits of control options for escapes. Even if EPA can not conduct assessments of risks and benefits from controls on CAAP facility escapes, examples such as those mentioned above may provide useful context for a qualitative discussion and highlight data needs.

4. Water Quality Impacts

At proposal, EPA described data and literature it compiled on water quality impacts of CAAP facilities in the United States. EPA drew on several sources to characterize these impacts, including open literature publications reporting on water quality and biological observations downstream of CAAP facilities. Another resource EPA evaluated was the National report of State listings of impaired waters (TMDL listings or State 303(d) reports). EPA also used a water quality model (QUAL2E) to simulate potential downstream water quality impacts under baseline and proposed regulatory scenarios. EPA's proposal estimated that the regulatory requirements would create pollutant load reductions at 23 flow-through and recirculating facilities in the scope of the proposed regulation, leading in turn to water quality improvements valued at $22,000 to $113,000 annually. Based upon these sources and its water quality modeling, EPA concluded that some CAAP facilities may have measurable adverse downstream impacts.

EPA will use materials submitted with public comment on the proposed rule (*see* Section III.E. of today's notice) and other data and literature to improve our characterization of the likelihood for CAAP facilities to affect water quality and aquatic ecosystems. Key highlights of this new information include:

First, the National Association of State Aquaculture Coordinators (NASAC) submitted a report describing NASAC's close examination of the States' listings of impaired waters that EPA used in analyses supporting the proposal to help characterize the prevalence of water quality impairments in the U.S. due to aquaculture (DCN 70583). (*See* Section III.E. for details.) NASAC found that of the seven States listing aquaculture as a possible source of impairment to certain specific waterbodies within their borders, only two verified that aquaculture facilities actually were a source of impairment. NASAC also found that for the two States that did confirm aquaculture as the source of reported impairments for the listed waterbody, changes at the facilities had been undertaken to address the source of impairments. (Refer to Section III.E. for a discussion of the NASAC report.)

Second, EPA received more publications and unpublished technical reports of which it was not aware at proposal and which describe studies of downstream water quality and biological impacts of CAAP facility effluents. Covering a range of facilities and geographic regions, some of the studies report adverse water quality and ecological impacts; others report limited or no impacts. These reports will help characterize the potential range of environmental impacts of CAAP facilities and we have put them in the record supporting this action. Examples include:

- Fries, L.T. and D.E. Bowles. 2002. ''Water quality and macroinvertebrate community structure associated with a sportfish hatchery outfall.'' *North American Journal of Aquaculture* 64: 257–266. These authors examined aquatic impacts associated with a large CAAP facility (four million largemouth bass fingerlings, one million channel catfish fingerlings, 12,000 kg live forage for captive broodstock, and 67,000 rainbow trout (winter only)). Based on the data covering a period from October 1996 to July 1998, the authors concluded that ''the hatchery effluent did not substantially affect downstream water quality and benthic communities, despite the relatively high total suspended solids and chlorophyll-a levels in the effluent.'' Their data showed ''* * *that sportfish hatchery operations can have negligible effects on receiving waters, even in environmentally sensitive systems'' (DCN 40621).

• Loch, D.D., J.L. West, and D.G. Perlmutter. 1996. ''The effect of trout farm effluent on the taxa richness of benthic macroinvertebrates.'' *Aquaculture* 147: 37–55. These authors studied three large trout flow-through facilities in North Carolina. Their data ''* * * indicate that trout farm effluent has a definite effect on stream insect communities, suggesting that water quality is reduced just below their outfalls, and to a lesser extent, 1.5 km further downstream. We were able to demonstrate quite clearly that taxa richness was significantly lower just below the outfalls compared to the control, and that although richness did increase further downstream, the recovery was not complete.'' The authors noted that impacts were seasonal, and that water quality and taxa richness improved during the winter. The authors also noted that sewage fungus (which they defined as a community of organisms that consist mainly of bacteria and ciliated protozoans and is the product of concentrated organic matter) ''was present in great abundance at Site 2 of each trout farm'' (DCN 61497).

• The Virginia Water Resources Research Center. *Benthic TMDL Reports for Six Impaired Stream Segments in the Potomac-Shenandoah and James River Basins,* Submitted by the Virginia Department of Environmental Quality, (Richmond, VA: Virginia Department of Conservation and Recreation, 2002), 207 pp. This document reports on a Total Maximum Daily Load (TMDL) calculation performed for six impaired stream segments in Virginia (*see* Section III.E. of today's notice). The report states that aquaculture effluents were confirmed as the primary source of the organic solids that impaired these short segments (0.02 to 0.8 miles), constituting from 86 percent to 99 percent of the organic solids loading in these largely first-order, spring-fed streams (DCN 40571). You can find this document on the Internet at *http://www.deq.state.va.us/tmdl/apptmdls/shenrvr/trout.pdf.*

• Memoranda, correspondence, and discussion with staff of the South Central Region of the Pennsylvania Department of Environmental Protection (PA DEP) regarding reports of environmental impacts at several CAAP facilities (200,000 to 400,000 lbs annual production) in Pennsylvania. PA DEP provided data and reports documenting adverse impacts of hatchery effluents in receiving spring-fed streams. The materials described observations and/or concerns including those about discharges of carbonaceous BOD and TSS and other pollutants, and results of aquatic biological surveys showing adverse impacts in hatchery receiving waters. While recognizing unique characteristics of these hatcheries (all located on limestone spring creeks and all capture most, if not all, of the streamflow) and seasonality of these impacts, staff biologists were concerned about adverse environmental impacts observed at several sites (DCNS 40596, 40597, 40598, 40599, 40600, 40601, 40602, 40603, 40604, 40605, 40606).

F. Holding Time Study

EPA took samples at aquatic animal facilities for a holding time study. The holding time study consisted of analyzing samples at different time intervals prior to analysis (*i.e.*, holding times) to determine whether varying holding times for the samples yielded comparable results to samples analyzed within the required time specified in the analytical method. EPA conducted the holding time study (1) to evaluate the data collected during sampling episodes at aquatic animal facilities and (2) for possible revisions to current holding time requirements. We assessed changes in target bacterial (total coliforms, fecal coliforms, *Escherichia coli, Aeromonas,* fecal streptococcus, and *Enterococcus*) concentrations over time (between 8 and 48 hours holding time) in wastewater samples.

When EPA designed the holding time study, we considered a range of model technologies for treating CAAP effluents, including some that would provide reductions in bacterial concentrations. EPA found the costs associated with using disinfection technologies at CAAP facilities to treat effluents are economically burdensome to the industry. The disinfection cost assessment is described in the preamble to the proposal (67 FR 57872, September 12, 2002). Because of the cost, EPA did not include technologies that reduce bacterial concentrations (such as disinfection) in the technology basis for the proposed rule. The TSS removal technologies we considered at proposal are not designed to reduce bacterial concentrations in effluents. Therefore, the original purposes for the study are no longer relevant for this rulemaking. However, study results may be useful for facilities, permit writers, and others. For this reason, this NODA summarizes the results and DCN 62398 in Section 6.20 of the rule-making record provides the complete results.

In summary, EPA conducted the study to evaluate sample concentrations at 8, 24, 30, and 48 hours after sample collection. Table II in 40 CFR part 136 specifies a maximum holding time of six hours for fecal coliforms, total coliforms, and fecal streptococci tests used for compliance with NPDES regulations. As a matter of practicality, EPA generally considers eight hours acceptable because the analytical laboratories require some sample preparation time before a sample can be processed. In addition, Section 9060B (Preservation and Storage) of *Standard Methods*, 20th Edition, recommends that nonpotable water samples be held below 10°C for a maximum of 6 hours transport plus 2 hours to begin analysis for bacterial analyses performed for compliance purposes.

As holding times increase, we expect that bacteria concentrations will change. Many CAAP facilities are remotely located and would have difficulty meeting the required 6 hour transport time to a laboratory. In conducting the study, EPA hoped to gain insight into the length of time that would still give comparable results to samples held for eight hours.

The study results for *Aeromonas* and fecal coliforms indicate that holding times over 8 hours did not provide comparable results to results at 8 hour holding times. For total coliforms, *E. coli*, fecal streptococcus, and *Enterococcus* holding times of 30 hours or less provided results comparable to results at 8 hour holding times.

III. Summary of Comments and EPA's Preliminary Assessment

In these sections, we discuss some of the major comments received on the proposed rule and EPA's current thinking on the issues.

A. Representativeness of EPA's Sampling Database

During the comment period and at the public meetings on the proposal, commenters raised concerns over the representativeness of the sampling and DMR data (EPA's sampling database) used to evaluate options and determine limits.

Some of the commenters were concerned about the lack of representation of green water systems that produce warm water species, which they claim have very different water characteristics, especially regarding the effluent concentrations of TSS. Commenters were concerned about the ability of both green water and warm water types of production systems to be able to comply with the proposed limitations for TSS. With assistance from industry representatives and detailed survey responses, EPA identified and visited six warm water or green water production facilities. To assess these concerns, EPA obtained and examined DMR data for two of the six

warm water facilities we visited, data for the remaining four facilities was not available. For both facilities, the data indicate that the discharges are lower than the proposed limits when evaluating TSS on a net basis (*i.e.*, which accounts for the concentrations in the source water). These discharges are consistent with the facilities' current NPDES permits. The second warm water facility also consistently meets its NPDES permit limits for phosphorus. Although these two warm water species production facilities differ in many ways from facilities engaged in the production of cold water species, the data confirms that these facilities can achieve the proposed effluent TSS concentrations. Thus, the proposed limits for recirculating systems may be achievable for green water/warm water facilities generally. Therefore, based on current data, there is no basis for differentiating between warm water and cold water production systems for any limitations for TSS in the final rule. (*See* the site visit reports DCNs 62393, 62394, 62395 and DMR data DCNs 31093, 30850). EPA seeks comment on this issue and requests any additional data for these types of systems to supplement EPA's current data set.

Other commenters questioned whether the database we used is sufficiently representative to evaluate the effectiveness of microscreen treatment, especially in cold temperatures. (Microscreens are one component of the Option 3 technology that was the basis for the proposed limitations and standards for certain subcategories.) EPA identified 13 facilities from the detailed surveys that reported using microscreen technology as a primary or secondary solids removal system. To observe the operation of the microscreen, EPA also made site visits to five facilities (three with recirculating systems and two with flow-through systems) that use microscreens. We visited facilities in areas that experience freezing temperatures in winter and concluded that operating a microscreen filter year round is possible because the facilities demonstrated satisfactory performance.

However, unlike our assumptions for the proposal, these facilities operate the microscreen filters in indoor spaces that are protected from freezing. Their microscreens are installed in existing heated spaces or, in one case, in a recently-constructed building that houses other effluent treatment system components. The facilities using microscreens were satisfied with their performance and at least one was planning renovations that included additional microscreens (*see* site visit reports DCN 62388, 62389, 62390, 62391, 62392). For the NODA and in its evaluation of the costs of second stage solids removal technology, EPA adjusted costing to include either full-flow settling basins where appropriate or microscreens in heated spaces of existing buildings. Our analysis shows that, based on available data, either of these technologies, the full-flow settling basin or microscreen, can achieve the proposed limits so we used the lower cost option for each facility in our analysis.

B. Production Systems

1. Flow-Through and Recirculating Systems

Based on comments, EPA may combine the two separate subcategories for flow-through and recirculating systems into a single subcategory. We received comments with engineering descriptions for identifying recirculating systems, including assertions that EPA had not adequately evaluated green water systems; however, the commenters did not give a specific regulatory definition that EPA could use. While we found that a widely-accepted formal definition for recirculating systems does not exist, these systems are generally distinguished by some form of engineered biological treatment, that allows for extended water reuse. (EPA uses the term ''engineered'' biological treatment to distinguish a recirculating system from a pond, having a ''natural'' biological treatment process that allows for extended water reuse.) A green water system, in turn, takes advantage of the algae's and bacteria's ability to improve water quality. The commenters based the distinction between the categories on hydraulic residence time or cumulative feed burden, which they define as the feed application rate divided by the flushing rate. Based on comments, we realize that the distinction between the two systems is less obvious than we assumed for the proposal. Further, some facilities may commingle components of both systems. Therefore, EPA may combine the two subcategories into a single subcategory and we seek comment on this approach.

Regardless of whether the subcategories are combined, EPA is considering the same modified BMP plan for both systems (Section III.F describes this BMP plan and Section III.G. presents potential TSS limitations.

2. Net Pens

EPA proposed best management practices, rather than numeric limits, for facilities raising fish in net pens. At proposal, we stated that net pen facilities discharged pollutants into receiving waters. We also noted that researchers had documented environmental impacts due to discharges in limited areas near and beneath some U.S. net pen facilities. EPA found reports documenting rapid recoveries of benthic areas impacted by net pen operations. We are also aware that State regulatory programs have addressed a number of concerns associated with these discharges and require regular benthic monitoring at sites to identify problems early so they can be corrected. Public comments on the proposal also asserted that State regulatory programs effectively address environmental concerns associated with pollutant discharges from net pen operations and no further environmental benefits from additional effluent guideline requirements are likely (DCN 70236, 70283, 70104). However, we also received comments that asserted the proposed requirements were not adequate or reflective of scientific understanding of environmental impacts (including impacts from solids deposition and from the use of drugs and chemicals). These comments also suggested how such impacts might be managed (*e.g.*, DCNs 70253, 70269, and 70270).

In light of these comments, EPA tried to collect more information to support evaluation of regulatory options for controlling pollutant discharges from net pen systems. EPA updated its literature search on the environmental effects of discharges of solids, nutrients, BOD, and drugs and chemicals from net pen facilities. The search included examining existing permit requirements and other practices currently used by net pen facilities. It also involved recognizing modeling tools that were developed and described in research literature that may be useful in translating pollutant load reductions into environmental responses. We do not expect to use these models to estimate environmental benefits for the net pen subcategory because our analysis suggests that practices relating to minimizing releases of solids at most net pen facilities would already meet the requirements we are considering (see Section II.E and DCN 62399).

EPA is also aware of a recently-updated major scientific review of non-native Atlantic salmon at net pen farms in the Pacific Northwest. This review updates an assessment that was considered at proposal (DCN 40149) and appears in a group of six articles published in Volume 62 (2003) of the journal, *Fisheries Research.* The updated information helps EPA better

understand environmental concerns with net pen systems and the actual impacts of current operations in the U.S. in the context of existing State and other requirements. At present, EPA concludes that net pens should continue to be included in the CAAP rule. Again, it appears that most net pen operations potentially in the scope of the regulation are already using practices and technologies at least as stringent as those EPA is considering for this subcategory.

One commenter questioned the need for a national regulation when the extent and size of the net pen industry is small. Data regarding in-scope facilities indicate that net pen facilities are used to raise salmon in three States (Alaska, Maine and Washington). A limited number of net pen facilities also produce other fish species as well. While net pen systems in Maine and Washington raise salmon to harvestable weights, net pen systems in Alaska also rear salmon before their release in the ocean.

Offshore aquatic animal production is another new area under development. The National Marine Fisheries Service (NMFS) proposed codes of conduct for these offshore operations announced in an August 2002 **Federal Register** notice (67 FR 54644). NMFS held six regional workshops in the fall of 2000 to discuss the codes of conduct for these types of operations. In 2002, NMFS published *Current and Future Regulation of Marine Aquaculture,* which describes best management practices similar to those we are considering in this rule. These include feed management to minimize waste, minimizing escapes, and minimizing negative effects of escapees on wild populations. The NMFS report also states that disease prevention through vaccinations is preferred over using antibiotics. NMFS has five research stations of which three have aquatic animals. Demonstration projects include sea cages in Puerto Rico, Hawaii, Gulf of Mexico, and eastern Gulf of Maine. EPA did not identify quantitative estimates of future U.S. mariculture activity. However, as research efforts move forward, offshore aquatic animal production may be of greater interest and provide opportunities for future industry growth in this area (*see* DCN 20428 for information about programs and future prospects). EPA is considering whether to identify as new sources subject to these requirements new offshore production facilities located in the territorial seas (*e.g.*, three to eight miles from shore) that use open water net-like structures.

3. Molluscan Shellfish Operations

EPA did not propose to include certain categories or types of facilities within the scope of the proposed rule. Floating or bottom culture molluscan shellfish operations were among the production systems not within the scope of the proposal. Although these operations were excluded, the proposed regulation did not specifically address nursery operations for molluscan shellfish, whose shellfish nurseries tend to be flow-through systems. We received requests to clarify the scope of the proposal and exclude shellfish nurseries from the regulation. We reviewed the information provided in the comments on this issue (*see* DCNs 70147, 70218, 70236, 70238, and 70268). Based on our review, EPA determined that these operations (*e.g.*, shellfish hatcheries, nursery operations, shore based wet storage (live holding) facilities and depuration (cleaning shellfish of impurities) facilities) discharge or add very little, if any pollutants to the receiving water. In some cases, they may remove some of the materials in source water. Some of these comments (DCNs 70147 and 70236) also indicated that shellfish hatcheries and nurseries produce less than 100,000 pounds annually and thus would not be subject to the proposed regulations.

Two comments indicated that adverse environmental effects, primarily accumulation of silt and solids, of excessively large and densely seeded molluscan shellfish operations were reported in the scientific literature (*e.g.*, DCN 70270, 70511). However, these sources acknowledge that adverse impacts are unusual and have not been reported in the United States.

EPA is, however, aware of concerns about deliberately introducing non-native shellfish into coastal waters of the United States. For example, there is ongoing debate about the comparison of possible benefits compared to the possible risks of introducing non-native pacific oysters (*Crassostrea ariakensis*) in the Chesapeake Bay. The National Academy of Sciences (NAS) issued a report (DCN 62456) summarizing the potential risks and benefits of introducing *C. ariakensis* in the Chesapeake Bay. The NAS report also recommends that States and regional authorities develop protocols to reduce the possibility of release of reproductively viable non-native oysters into the bay, including hatchery biosecurity. Although the National Academy of Sciences concludes that there is not an adequate group of laws and regulations in the United States to address the introduction of non-native shellfish into marine waters, the Academy does recommend that the Chesapeake Bay Program be evaluated as a model for interjurisdictional decision-making system with binding authority over introductions that might affect the coastal areas of several States.

C. Drugs and Chemicals

EPA's proposal and technical literature in the record identified several human and aquatic life health and environmental issues of potential concern related to using drugs and chemicals at AAP facilities. These issues included evidence of drug and/or chemical residues in sediments in the receiving waters of AAP facilities or in non-target organisms in the receiving waters (*e.g.*, DCN 20141). The Agency proposed limited reporting requirements for certain types of drug applications. It also proposed establishment and implementation of BMP plans that would help reduce the unintended release of covered drugs and chemicals. EPA could not, however, quantify either baseline loadings of drugs and chemicals, or expected reductions in these loadings due to proposed requirements. Consequently, we did not try to quantify environmental benefits for measures addressing drugs and chemicals.

Some comments asserted that those who apply drugs and chemicals at CAAP facilities consider environmental safety in their decision-making process (DCNs 70236 and 70263). Other commenters added that EPA did not provide evidence that drugs and chemicals used at aquatic animal production facilities lead to environmental problems. They also argued that FDA is the appropriate Federal agency to assess the environmental safety of drugs used in aquatic animal culture (DCNs 70165, 70192, 70216, 70228, 70230, 70236, 70239, 70262, 70263, 70273, 70286). EPA also received other comments arguing that the proposed reporting and BMP requirements relating to drugs and chemicals should be more stringent (DCN 70145).

In addition to drugs and chemicals used as therapeutants or to maintain process water quality, some commenters believe that EPA should regulate the discharge of feeds that contain pigments (such as astaxanthin or canthaxanthin). They believe that these color additives are harmful to humans, especially in the fish flesh of cultured fish that consume the feed. Astaxanthin and canthaxanthin, two widely used color additives in fish feed, are approved by FDA as color additives in fish feed when used in accordance with

prescribed conditions on the label. FDA found that these additives would not have a significant impact on human health and the environment (DCN 40417 and 40421).

EPA also collected more information about CAAP drugs and chemicals (*see* Section II.E of today's notice). EPA has met with other Federal authorities such as USDA/APHIS and FDA to clarify and coordinate regulatory and program goals. EPA will work closely with Federal, State, and other appropriate scientific experts to fully consider the available information described here.

Based on our consideration of public comments and information described in Section II.E relating to chemicals applied at CAAP facilities, EPA believes that further evaluation is needed to fully understand the potential for adverse environmental impacts from discharges of chemicals, including therapeutants, applied at CAAP facilities. However, the information we have reviewed to date suggests that the FDA environmental assessment process and site-specific regulatory, professional, or industrial requirements or practices address adverse impacts to a significant degree. We will continue to evaluate this information and consult with relevant authorities.

In addition, EPA and FDA are working on a formal agreement that would address environmental concerns about the discharge of drugs used at aquatic animal production facilities. This agreement, which might help protect the aquatic environment from harm, would facilitate information sharing about effluent concentrations of active drug ingredients. When appropriate, FDA would include in the labeling of approved new animal drugs, effluent concentrations of the active drug ingredient which should not be exceeded in wastewater discharges. EPA would notify permitting authorities who would incorporate these effluent concentrations into the NPDES permits as enforceable requirements. EPA seeks comments on including these labeling concentrations into NPDES permits.

EPA identified research on the use of activated carbon filtration to treat and remove active ingredients in drug and pesticides from CAAP facility wastewater. We also estimated the cost of applying this treatment at facilities (DCN 62451). Based on the information we collected, EPA estimated the cost of applying wastewater treatment to remove drugs and chemicals from CAAP effluent before discharge. EPA considers these costs to be economically unachievable, (see Section V.C. of this notice). However, management practices intended to ensure proper storage, use and disposal of drugs and chemicals and to minimize the need for their use may be an effective approach for minimizing their discharge. To address this issue, EPA is evaluating an additional option (Option A) that would be similar to Option 1 but would substitute a drugs and chemicals BMP plan for the solids control BMP plan proposed in Option 1. The Option A BMP plan would also have to address potential escapes of non-native species.

In developing this option, EPA evaluated practices that involve the early identification of health problems, recordkeeping, and proper use and storage of drugs and chemicals by employees. In addition, EPA found that biosecurity practices that contain and prevent the spread of disease throughout the facility are effective at reducing the use of drugs at CAAP facilities. Health screening involves observing the normal behavior of aquatic animals at a facility (*e.g.*, feeding behavior and abnormal activities). EPA recognizes that more intensive screening activities, such as diagnostic tests for specific pathogens, may not be technologically feasible or economically achievable. Recordkeeping and the regular review of the records should help facilities evaluate the effectiveness of health management and modify their practices to further reduce health problems in the aquatic animals that may lead to greater use and disposal of drugs and chemicals.

D. Non-Native Species

EPA received comments presenting discussions about CAAP as a pathway for the introduction of non-native species. Some commenters feel that existing State and local permitting programs and regulations provide adequate protection. Several State agencies commented that while they concur that measures to address potential risks associated with aquatic nuisance or invasive species are important, such measures are most appropriately and effectively developed at a State or Tribal level and that in many cases, specific requirements and policies already exist. Some of these States briefly described their relevant programs and regulations. We also received comments from States suggesting that proposed new national requirements might threaten existing State efforts addressing invasive species.

However, a State permitting authority (DCN 70067) and a State coastal resources agency (DCN 70225) commented that EPA should require CAAPs to report escapes of non-native species to the permitting authority. They gave their rationale for this requirement, including arguing that timely notification of escapes would allow State natural resource and environmental agencies to evaluate and, if necessary, control the spread of the non-natives. These agencies also recommended that EPA prohibit the intentional release from CAAPs of non-native species that might harm wild species. One of these agencies suggested that facilities should be equipped with physical barriers to prevent the incidental discharge of all life stages of non-native species. One agency supported a Federal regulation corresponding to existing State rules that would prohibit unauthorized release of harmful or potentially harmful exotic and non-native species.

Other commenters urged more coverage (*e.g.*, ponds, molluscan shellfish) and control for escapes. They identified several specific concerns: escapes of the cultured organisms themselves (*e.g.*, Atlantic salmon in the Pacific Northwest), including genetically modified species, and escapes of pathogens and parasites potentially associated with the cultured organisms. Commenters also proposed potential control requirements (*e.g.*, prohibitions on reproductively viable non-native species; containment requirements). Some commenters believe that current practices to minimize or prevent the release or escape of non-native species are effective.

EPA also received comments questioning our interpretations of technical literature about non-native species concerns. The JSA pointed out that EPA cited a comprehensive 2001 NOAA technical memorandum on the net pen salmon farming industry in the Pacific Northwest in its discussions on possible concerns with escapes of non-native species (DCN 40149) but that EPA did not also cite the conclusions of the report regarding the ''very low or no'' risk of interactions or problems from accidental releases of Atlantic salmon in the Pacific Northwest. That report states that the escape of Atlantic salmon, a non-native species, is ''deemed to carry very little or no risk'' with respect to potential for hybridization with other salmonids, colonization of salmonid habitat, competition with native species for forage, predation on indigenous species, and serving as vectors for the introduction of exotic pathogens. The report reviews and discusses scientific evidence and reasoning to support this conclusion. The report also states that ''[t]he possible negative consequences of such [accidental escape] events have

been limited in part by implementation of pre-prepared recovery plans, some of which have included deregulating catch limits for public fishing on escaped farm fish, and by programs to monitor the background populations of fish in nearby watersheds. These responses will continue to be effective management practices to minimize impact, together with further advances in the technology. Improvements in the design and engineering of net pens and their anchorages, and the use of new net materials, are continuing to reduce the incidents of loss following structural failure or damage from large predators.''

In addition, JSA gave references updating information contained in earlier sources we cited in developing the proposed rule addressing viral hemorrhagic septicemia (VHS) on the West Coast. In contrast to that earlier information, the more recent references provided by JSA demonstrate that VHS was a pre-existing condition in marine fish throughout the Pacific Northwest. These references are:

- Amos, K.H., J. Thomas, B. Stewart, and C.J. Rodgers. 2001. ''Pathogen transmission between wild and cultured salmonids: risk avoidance in Washington State, United States of America.'' *Risk Analysis in Aquatic Health: Proceedings of an International Conference,* Paris, France, 8–10 February, 2001:83–89 (DCN 40609).
- Amos, K.A., J. Thomas, and K. Hopper. 1998. ''A case history of adaptive management strategies for viral hemorrhagic septicemia virus (VHSV) in Washington State.'' *Journal of Aquatic Animal Health* 10:152–159. (DCN 70732)
- Meyers, T.R. and J.W. Winton. 1995. ''Viral hemorrhagic septicemia virus in North America.'' *Annual Review of Fish Diseases* 5:3–24. (DCN 40592)

Some commenters urged EPA to more effectively and appropriately align any considerations about invasive species with existing Federal (*e.g.*, the National Invasive Species Council), State, and other authorities and requirements. Other comments asserted that EPA should not regulate non-native species because they are already regulated by other agencies.

Commenters further stated that EPA should better define some of the terms we used in the proposal (such as ''non-native species'' and ''biological pollutants''). The proposed non-natives definition applies to an individual, group or population of a species that is introduced into an area or ecosystem outside its historic or native geographic range and that was identified by the appropriate authority as non-native or invasive. Most States have, by statute or regulation, identified certain species of plants and animals as non-native, invasive or exotic species that could threaten native aquatic biota. The term excludes species raised for stocking by public agencies in a given State. EPA excluded these species because the action of stocking a species in public waters provides a sanctioned opportunity for the species to become established. In any given State, if an aquatic animal species that is otherwise defined as non-native is raised to be stocked in public waters, then any commercial facilities producing the same species, by definition, would not be producing a non-native species. EPA defers to the States to determine what species are considered non-native in their State.

EPA recognizes that non-native species do not always present a problem. The problem lies in a species becoming invasive or established in an area to the point where it creates adverse human health, economic or ecological/environmental impacts. EPA is evaluating the information described in Section II.E.3 of today's notice and comments on the proposal and will assess whether the requirements for minimizing and/or reporting on escapes of non-native species are appropriate. EPA is particularly interested to learn about prevention measures that reduce the likelihood that species or pathogens will become invasive or established (*e.g.*, regular inspection and maintenance of escape prevention devices). For the final rule, EPA will also consider costs, economic impacts, effectiveness, and possible benefits, and existing relevant Federal, State, Tribal, and other requirements or practices.

E. Water Quality Impacts From TSS, BOD, and Nutrients

EPA received several comments about water quality impacts from CAAP facilities. (This section addresses comments on discharges from flow-through and recirculating facilities. Section III.B.2 discusses comments on water quality impacts at net pen systems. Elsewhere in Section III. you will find discussions on impacts from other discharges.) As discussed in Section II.E.4, some information indicated that CAAP facilities may be a significant part of local water quality impacts. Commenters were especially concerned with one source of information EPA considered in developing the proposed rule (State CWA section 303(d) reports on the causes and status of impaired water bodies) and questioned whether water quality impacts from CAAP facilities were of sufficient national scope to warrant a national effluent guideline.

Commenters also discussed situations where CAAP effluents might contribute to positive water quality impacts. In addition, commenters reviewed existing regulatory structures that, they asserted, provided adequate water quality protection. Following public comment, EPA received materials from a State agency drawing attention to what they characterized as serious adverse water quality impacts at several CAAP facilities in their jurisdiction (Section II.E.4. describes additional information about water quality EPA compiled since proposal).

Two stakeholder groups (JSA and NASAC) argued that there is no evidence that CAAP is a ''significant threat to our Nation's waters.'' They asserted that ''[t]o justify promulgating national effluent rules for the U.S. aquaculture industry, EPA must provide scientific documents irrefutably identifying that most of the U.S. aquaculture facilities are compromising the water quality of the receiving waters from aquaculture facilities.'' These groups offered the results of a NASAC study documenting that a far smaller number of States (two) than discussed in EPA's proposal documents (seven) identified aquaculture as a major source of impairment in the 1998 and 2000 303(d) lists they submitted to EPA (DCN 70583).

EPA reviewed this information and concurs with several key findings of the NASAC 303(d) report. First, NASAC's analysis correctly shows that although seven States listed aquaculture as a possible source of impairment to water bodies within their borders, only two of these States (North Carolina and Virginia), when contacted by NASAC, verified that aquaculture facilities were a source of impairment. The remaining States indicated to NASAC that aquaculture was not a known source of impairment on the impaired stream segments reported to EPA. However, one of the States noted that aquaculture had subsequently been identified as a possible source of impairment on a different stream segment. EPA also concurs that, for the reported aquaculture-related water body impairments, local authorities reported that impairments are being addressed by site-specific solutions. In the case of North Carolina, according to the NASAC report, the State addressed water quality impairment in the affected arm of Santeetlah Lake by structuring a buy out that will remove the trout farms contributing to the impairment. In the case of the six stream segments that Virginia reported impaired due to trout

farm effluents, a 2001 benthic macroinvertebrate survey confirmed that all six streams were still impaired. In 2002, the State prepared a TMDL for these six stream segments. The State affirmed that aquaculture effluents were the primary source of organic solids that impaired these short stream segments (ranging from 0.02 to 0.8 miles). They constitute from 86 to 99 percent of the organic solids loading in these largely first-order, spring-fed streams (DCN 40571).

F. Best Management Practices

Many commenters stated that EPA did not have enough information to develop best management practices that would apply to all CAAP facilities alike. Commenters also did not want the BMPs to be prescriptive. They wanted language changes to allow for flexibility and innovative technologies. Commenters asked EPA to consider alternatives to the preferred options selected for the proposal for certain subcategories. As a result, EPA is considering several changes to the BMP requirements in the proposed rule.

Among the comments received on BMPs are:

- Commenters preferred BMPs over direct monitoring to comply with numerical limits. One commenter reported that testing (including shipping) took about 600 employee hours and $40,000 per year. The commenter also stated that reliance on BMPs would ease the burden and allow them to shift the hours and dollars spent on testing to implementing BMPs.
- Other concerns should be addressed in developing a BMP plan, but the appropriate personnel at the facility should identify the selected practices or control options, subject to regional or State review. Commenters also stated that the BMPs should not be prescriptive due to regional and State variations in aquatic animal production operations as well as possible misinterpretation by permit writers.
- EPA should better define the term ''BMPs'' and the requirements of a BMP plan.
- EPA underestimated time and costs for development of BMPs.
- Some commenters supported BMPs but did not believe that EPA should issue a final guidance document (an updated version of the proposal document). Instead, EPA should give references to other sources such as land grant universities that have researched this area.
- The proposed BMPs would control effluent discharges poorly. Some commenters indicated that BMPs should not be used as a replacement for discharge limitations but as an added tool to achieve discharge reductions.

Based on comments, EPA is considering a simplified guidance document to identify recommended components of a BMP plan. In EPA's view, a list of these components may help guide producers in developing their own BMP plans. Such guidance might also help reduce the burden on producers of developing a plan and allow flexibility in meeting the facility's specific goals. (Section IV.C. describes these components)

G. Proposed TSS Limitations

EPA received comments stating that it lacked information to develop numerical limitations relevant to all CAAP facilities. Commenters stated that regional differences (among facilities) and effluent characteristic differences (between cold water and warm water species) would make it impractical for all facilities to meet the proposed limits.

The National Association of State Aquaculture Coordinators (*see* DCN 62387) asserted that there is no evidence to show that using best professional judgment to develop limitations associated with NPDES permits is not already protecting water quality effectively and that a national effluent guidelines regulation is not necessary. They later provided information on recent developments in some State programs on the use of BMPs in NPDES permits for CAAP facilities. EPA will consider this information with other information the Agency collected to further evaluate current wastewater treatment practices in the industry.

In response to these comments, EPA performed a preliminary assessment of the TSS limitations and found that most flow through facilities already have relatively low discharges of TSS in full flow or recombined flow effluents. The BMP approach will provide an additional control of TSS discharges. Thus, EPA is reconsidering whether monitoring of TSS concentrations is necessary for this industry. EPA seeks comment on this issue.

EPA proposed that, in the case of flow-through systems, TSS limitations would apply on a net basis (67 FR 57927). That is, the discharge limitation would apply to the amount of TSS added by the production system. This approach is consistent with the NPDES general permit conditions for CAAP facilities in at least one State (Idaho). For recirculating systems, by contrast, EPA proposed that TSS limitations would apply on a gross basis, without accounting for TSS in the source water. EPA's supporting documentation for the proposal shows that the data used to establish the proposed limitations for both subcategories was based on gross TSS concentrations.

The NPDES permit regulation provides a procedure for adjusting limitations to reflect credit for pollutants in intake source water in certain circumstances. These include a demonstration that a discharger's control system would meet the applicable limitations in the absence of pollutants in the intake water (*see* 40 CFR 122.45(g)). EPA is now considering whether to promulgate limitations for both subcategories that leave the decision of establishing permit limits on a net or gross basis to the permit writer. A requirement to establish limitations on a net basis could be interpreted to require all CAAP facilities to collect samples from both their effluent and influent, thus doubling the number of samples required and the analytical costs, which may be unnecessary under many circumstances. For example, facilities whose source water is spring fed may have very little TSS in the source water. Likewise, some recirculating facilities may use public water supplies that also have low TSS concentrations in their source water. Another approach would require monitoring of influent only where effluent monitoring shows a possible exceedence of the limit.

EPA asked for updated copies of NPDES permits, fact sheets, and DMR data for 125 permitted facilities from the EPA regional offices. EPA was able to get NPDES permits for 49 facilities in the detailed survey. EPA also obtained DMR data directly from facilities and PCS for 47 facilities. EPA got DMR data and permits for 43 facilities. There were six facilities for which EPA had NPDES permits but not DMR data and four facilities for which EPA had DMR data but not NPDES permits.

EPA used the detailed surveys and NPDES permit information to identify discharge points and the nature of discharges (*e.g.*, full flow from raceways or solids collection decant water) in the DMR data. EPA found reported TSS data in the DMR set from 31 of the 47 facilities for which it had DMR data. Sixteen facilities in the DMR set did not have TSS data. EPA concluded that 28 of the 31 facilities with TSS data use at least primary settling treatment. Two of the 31 facilities indicated that they have no treatment, and EPA was not able to verify in-place treatment for one facility.

To determine the ability of facilities to meet the primary treatment option, EPA then compared the reported TSS concentration data with the limits proposed for flow-through facilities that produce 100,000 to 475,000 pounds of

aquatic animals a year and for recirculating systems that produce more than 100,000 pounds of aquatic animals a year. For the 31 facilities with TSS data, the number of effluent measurements per facility ranged from 424 to 2, with the average for all 31 facilities being 68 measurements. EPA compared facility TSS monitoring data with the proposed limits for similar types of discharges and found:

- Recombined effluent—Two of the three facilities in this category exceeded the proposed daily maximum limit of 11 mg/L in 28 of 178 reported measurements. We did not find monthly average measurements for this group
- Full flow settling basin discharges—Two of six facilities exceeded the proposed daily maximum limit of 11 mg/L in 15 of 110 reported measurements, and exceeded the proposed monthly average limitation of 6 mg/L in 10 of 113 reported measurements
- Bulk flow effluent—One of three facilities exceeded the proposed daily maximum limit of 11 mg/L in four of 104 reported measurements and exceeded the proposed monthly average limitation of 6 mg/L in six of 104 reported measurements
- Offline settling basins—Neither of the two facilities with TSS data exceeded the proposed daily maximum limit of 87 mg/L or the proposed monthly average limitation of 67 mg/L in 81 reported measurements
- Recirculating system combined effluent—The one facility with reported TSS data exceeded in one of nine reported measurements the proposed daily maximum limit of 50 mg/L, and they exceeded in three of 87 reported measurements the proposed monthly average limitation of 30 mg/L.

EPA found that all of the reported TSS measurements that exceeded the proposed limits occurred in the earlier data reported by an individual facility. The time periods varied by facility from 1990 through 2001 for the data used to compare proposed limits with reported monitoring data. Facility data in the most recent year were all within the proposed TSS limits for the corresponding outfall type. The record discusses the analysis in these data (*see* DCNs 62641 and 31137).

EPA also compared sampling data from the four sampling episodes with the proposed daily maximum limits and found:

- Full flow settling basin discharges—Neither of the two facilities with full flow discharges exceeded the proposed daily maximum limit of 11 mg/L in any of the 10 sample measurements.
- Bulk flow effluent—One facility with a bulk discharge did not exceed the proposed daily maximum limit of 11 mg/L in any of five sample measurements.
- Offline settling basins—One of three facilities with offline settling basins exceeded the proposed daily maximum limit of 87 mg/L in four of the total 21 sample measurements taken at the three facilities.
- Recirculating system combined effluent—The one facility sampled exceeded the proposed daily maximum limit of 50 mg/L in one of five reported measurements.

H. Feed Conversion Ratios

Improving the conversion of feed to live weight positively affects water quality, generating less wastes by reducing the amount of uneaten feed. Some commenters raised a concern about the feed conversion ratios (FCRs) EPA assumed in the cost model and the frequency factor adjustment (*see* Section III.I.). The FCR is the weight of feed used to produce a unit weight of aquatic animals. Commenters said the FCRs we used for proposal were too high, and most facilities are achieving better feed conversion ratios than assumed.

Many facilities responding to the detailed survey estimated their FCR or submitted detailed information on feed use and production. EPA found reported FCRs to be quite variable, even among facilities with similar systems, ownership-types, and species. EPA calculated FCRs facility-by-facility from the detailed survey to estimate possible load reductions. For the purpose of estimating costs and pollutant load reductions, EPA assigned target FCRs as the 25th percentile value for facilities in each combination of species, production system, and ownership type group. EPA does not currently plan to establish any limits on FCRs. We used facility-specific FCRs to estimate baseline loads and compare them to the target FCR to estimate possible load reductions from implementation of solids control BMPs.

In comparing FCRs with effluent concentration data on a facility basis, EPA found that the raw wastewater pollutant loading at a facility is still largely linked with feed inputs. To address comments about the impact of the FCR values, EPA will perform sensitivity analyses to compare the target FCR and resulting pollutant load reduction estimates.

I. Cost Analyses

Comments stated that the proposed model facility approach used was not adequate. Many of the comments suggested that EPA's cost estimates were not accurate, but only a few commenters (*e.g.*, JSA AETF, NASAC, and the U.S. Trout Growers Association) provided detailed cost data. These commenters also suggested that EPA's model facilities were an inaccurate representation of the industry because the model facilities do not capture the diversity of actual facilities. One commenter stated that the labor rates for managers and laborers were too low. To address these concerns, EPA used facility-specific information from the detailed survey to perform the analyses for the NODA. *See* Section V.A.2.

Commenters also criticized our use at proposal of the frequency factor approach to major national estimates. For this approach, EPA applied a ''frequency factor'' to the cost for each model facility to estimate the national cost for all facilities represented by the single model facility. EPA estimated frequency factors based on these sources: EPA site visits, screener surveys, observations by industry experts, USDA's 1998 Aquaculture Census, USDA APHIS National Animal Health Monitoring System, and State regulatory programs. Commenters argued that the frequency factors underestimated compliance costs, so EPA may have underestimated impacts.

For the NODA, EPA changed its approach by using data from the detailed survey to estimate facility-level compliance costs and associated loads. Instead of applying the frequency factors used at proposal, we applied statistically-derived weights from the survey design to scale detailed survey facility estimates to national estimates based on the probability that a facility was selected for the detailed survey sample. Because not all sampled facilities would be within the scope of the rule, we used a subset of the detailed survey sample to estimate national CAAP costs for industry sectors affected by the proposed rule (*see* Section II.D. for a description of the survey weights and the subset).

IV. Regulatory Options Considered for the Proposal and Modifications Being Considered for the Final Rule

A. Proposed Regulatory Options

In subcategorizing the industry for the proposal, EPA considered several factors (*e.g.*, age of the equipment and facilities, location, processes employed, and the available types of treatment technology.) We identified the types of production systems (*e.g.*, flow-through systems, recirculating systems, net pens) to create subcategories with similar operating practices, quality and quantity

of effluent type and discharge frequency.

We then proposed limitations based on these CAAP subcategories: flow-through, recirculating, and net pen systems. Flow-through systems tend to have high effluent flows that can exceed a complete system volume exchange per hour. Some flow-through facilities may treat two discharges: a bulk discharge and a discharge from a settling basin referred to as off-line settling. The bulk discharge is large volume and flows directly from the areas where the animals are confined. The off-line settling discharge is water drawn from, without disturbing, the solids collected from the production process that are treated in a basin through settling. Compared to the bulk flow discharge, the volume of discharge from the off-line settling basin is small but more concentrated in pollutants such as TSS, BOD, or nutrients. Other flow-through facilities choose to treat their entire discharge through a single treatment system (full-flow settling) that includes the solids generated from the production process and the entire production volume of water. Facilities that use full-flow settling with a single discharge point usually have relatively low concentrations of TSS, BOD, and nutrients.

Some recirculating systems have single discharges with relatively small volumes (often a fraction of the system volume per day) of treated effluent with concentrations of TSS, BOD, and nutrients comparable to the off-line settling basin discharge at some flow-through facilities. Other recirculating systems (called dual discharge) may have two discharges, one from a solids treatment process and one often described as ''overtopping'' water. Overtopping water is process water that drains from production tanks or process water treatment units as a result of continually adding a small amount of water to the recirculating system. This practice provides make-up water that offsets losses and some dilution for a ''margin of safety'' that ensures adequate process water quality. The overtopping water effluent TSS, BOD, and nutrients are typically less concentrated than solids treatment system effluent, but they are more concentrated than bulk discharges from flow-through systems. Solids treatment effluents from a dual discharge recirculating system are similar in concentration to flow-through offline settling basin and single discharge recirculating systems. Net pen systems release TSS, BOD, and nutrients directly to receiving waters.

EPA then divided the subcategories by facility size (*i.e.*, the amount of aquatic animals produced) because of differences in economic factors related to production size. The proposal did not include facilities with annual production below 100,000 pounds due to economic achievability concerns. We also proposed less stringent requirements for flow-through facilities with production between 100,000 and 475,000 pounds a year (again based on concerns about economic achievability). EPA based its proposed conclusions on economic achievability of limitations based on the model technology and model facility analysis. The proposed model facilities represented specific size ranges in pounds produced. Pounds produced were derived from annual revenue ranges and price data from the 1998 Census of Aquaculture. Most of the impacts that EPA identified would adversely affect trout producers below an annual threshold of 94,000 pounds production. Therefore, EPA proposed to establish the applicability threshold for the effluent guideline at 100,000 pounds a year to avoid projected impacts in the trout sector. Production of other species also faced similar economic stress at lower production levels. EPA proposed the same applicability threshold for other species because doing otherwise would add needless complexity to the regulation, with little corresponding environmental benefit.

EPA identified technology options for each of the system/size subcategories based on technologies and practices found at facilities in the subcategory. We evaluated the options in order of increasing stringency, both in the degree of pollutant reduction achieved as well as in cost. Each successive option incorporates the technologies and practices of the previous option.

Option 1 for flow-through systems includes primary settling (*e.g.*, quiescent zones and settling basins) and developing and implementing a BMP plan for solids control. Option 1 for recirculating systems includes similar technologies/practices to those for flow-through systems. Option 1 for net pens includes feed management and BMP plan development for solids control.

Option 2 for all subcategories combined the Option 1 requirements with identifying and implementing BMPs to control discharges of drugs, chemicals, and non-native species. Option 2 also included a reporting requirement for the use of Investigational New Animal Drug (INAD) and extra-label use drugs. Option 3 combines Option 2 requirements with solids polishing (*e.g.*, microscreen filtration) for flow-through and recirculating systems and active feed monitoring for net pens.

EPA selected the proposed regulatory options for each subcategory based, in part, on the costs and economic impacts of installing and implementing these options. The proposed regulation for flow-through systems applied a two-tiered approach reflecting economic achievability concerns. For facilities that produce between 100,000 and 475,000 pounds of aquatic animals a year, EPA proposed to base BPT, BCT, BAT and NSPS on Option 1. For facilities that produce more than 475,000 pounds of aquatic animals per year, we proposed BPT, BCT, BAT and NSPS requirements on Option 3. For recirculating systems, EPA proposed Option 3 as the basis for the BPT, BCT, BAT and NSPS requirements. For net pen systems, EPA also proposed Option 3 as the basis for BPT, BCT, BAT and NSPS. The components for each option for flow-through and recirculating systems are summarized in Table IV.B.1.

EPA is still considering a no further regulation option. EPA received many comments supporting a no rule option for this industry. Comments referred to programs within the Federal and State governments such as the NPDES permitting process and TMDLs, indicating that these programs are better equipped to address local problems than national guidelines. They also argued that the baseline discharge loadings do not warrant national guidelines. The Agency will fully consider this option and the comments when it issues the final action.

B. Modifications Being Considered for the Final Rule

The following sections discuss several alternatives EPA is considering. We present the revised costs, pollutant reductions, and economic impact estimates for both the proposed options (1 to 3) and two new options (A&B) (*see* Section VI of today's notice). These revised estimates reflect:

- Data from EPA's detailed surveys.
- Data received with comments to the proposed rule.
- Effluent monitoring (DMR) data received from EPA regional and State permitting authorities.
- Changes resulting from methodological revisions to EPA's analytical approach. Before final action, EPA will consider these and any further revisions resulting from comment on today's notice. The following sections describe alternatives we are considering for the different regulatory levels of control (*e.g.*, BPT, BCT, BAT, NSPS).

1. Description of Modified Options—Flow-through and Recirculating System Subcategories

As a result of the facility-level analysis from detailed surveys and comments, EPA re-evaluated the flow-through and recirculating system technology options for BPT, BCT, BAT, and NSPS limitations or standards from proposal. In addition to the three proposal options, EPA is considering two new options that represent changes to the proposed options. We will also continue to consider a no further regulation option.

The first new option (Option A) would, like Option 1, include primary settling. It would also include the requirement to develop and implement a BMP plan that minimizes both the discharge of drugs and chemicals and the possible escape of non-native species. Option A would also include the requirement for reporting Investigational New Animal Drugs (INADs) and extra-label use drugs as included in the proposed Option 2. The only difference between Option A and the proposed Option 2 is that Option A does not require the development and implementation of BMPs to address solids control.

Like Option 1, Option A would ensure that all covered facilities remove solids by primary settling. Based on the detailed survey data, primary settling is used at 468 out of 506 (92.5%) of all flow-through and recirculating CAAP facilities. However, where Option 1 would require using BMPs to control solids, Option A does not. Option A would instead require BMPs to (1) address the use, storage, and disposal of drugs and chemicals and (2) minimize or prevent the release or escape of non-native species. This substitution may be appropriate for two reasons. First, many facilities have already established these practices. The detailed survey indicates that drug and chemical management practices are in use at 44% of flow-through and recirculating CAAP facilities. The practices are also used at 46% of flow-through facilities with annual production between 100,000 and 475,000 pounds. Over 90 percent of facilities producing species that would be considered non-native use escape prevention practices. Second, EPA thinks this change may be appropriate because it addresses the environmental effects that most concerned commenters. Therefore, EPA will consider Option A as the basis for BPT, BCT, BAT, and NSPS for the flow-through and recirculating subcategories with annual production greater than 100,000 pounds in the final rule. Option A would identify aspects of the facility operation that must be addressed with appropriate management practices but not specify the particular practices.

The proposed Option 3 specified additional solids removal requirements that could be accomplished through secondary solids removal treatment technologies such as microscreen filtration or a solids polishing pond. Option 3 included a numeric TSS concentration limit of 10 mg/L maximum daily and 6 mg/L monthly average for full-flow, flow-through facilities; 69 mg/L maximum daily and 55 mg/L monthly average for offline settling at flow-through facilities; and 50 mg/L maximum daily and 30 mg/L monthly average for recirculating facilities. EPA estimates that solids polishing technologies (or some equivalent) are currently used at 264 of 506 (52.2%) of all flow-through and recirculating CAAP facilities.

The second modified option (Option B) being considered is similar to the proposed Option 3 in that it would require a greater degree of solids removal than achieved under Option A. However, Option B would offer facilities the choice to develop and implement a solids control BMP as included in Option 1 in lieu of installing secondary solids control technology, such as a second stage settling pond or a microscreen filter, and meeting numeric TSS limits. Facilities could still choose to install solids polishing technology and monitor TSS to achieve a numeric limit, but they could alternatively choose to instead implement solids control BMPs such as feed management.

Table IV.B.1 identifies the components or technologies we are considering for the proposed and modified options for flow-through and recirculating systems.

TABLE IV.B.1.—TECHNOLOGIES OR PRACTICES CONSIDERED FOR THE PROPOSED AND MODIFIED OPTIONS

Options	Technologies or practices				
	Primary settling	Solids control BMPs	Drugs and chemicals BMPs	Escape prevention	Secondary solids removal
1	√	√			
2	√	√	√	√	
3	√	√	√	√	√
A	√		√	√	
B*	√	√	√	√	√

*Option B would include primary settling, drugs and chemicals BMPs, escape prevention, and a choice between solids control BMPs or secondary solids removal technology.

EPA seeks comment on establishing BPT, BCT, BAT, and NSPS based on any one of these options for both flow-through and recirculating systems. We also seek comment on whether EPA should establish limitations and associated BMPs.

2. Continual Discharge Subcategory

Public comment (DCNs 70137 and 70236) suggests that EPA's proposal did not clearly define recirculating systems. A variety of systems are used to produce aquatic animals spanning a continuum from completely flow-through (single pass of water through culture tanks) to nearly complete recirculating (only small amounts of make-up water are added to offset evaporation and other losses). Closed ponds (*i.e.*, systems that do not regularly discharge) and net pens (systems located directly in the receiving water), are outside of this continuum. Many facilities operate flow-through systems with multiple uses of the water before discharge. Oxygen may be added and solids collected between uses to provide better quality of reused water. Some facilities operate flow-through systems with process treatments that are similar to some used in recirculating systems (*e.g.*, enhanced solids removal, extensive oxygenation, and carbon dioxide stripping).

Recirculating systems may have concentrated solids effluents from solids removal processes that require additional treatment prior to discharge.

These concentrated solids effluents from recirculating systems may be similar in quality to those discharged from quiescent zones in flow-through systems. Many recirculating systems also have an overflow or overtopping water discharge that is combined with the solids treatment effluent. Overtopping water quality is essentially the same as that of the process water in the recirculating system. The quality of the overtopping water is usually more concentrated in constituents (such as TSS, BOD, nitrogen, and phosphorus) than flow-through system bulk discharges. However, it is less concentrated in these constituents than effluents from solids treatment processes such as offline settling basins. Daily volume of discharged overtopping water is also typically less than 10% of the system volume compared to the multiple system volume exchanges per day in typical flow-through systems. Our proposal did not clearly state how the rule would cover overtopping water from recirculating systems. EPA intended overtopping water discharges to be treated like solids treatment water or combined effluents. That is, all discharges from recirculating systems would be subject to the same proposed effluent limits.

EPA may revise its proposed subcategorization scheme by combining the flow-through and recirculating subcategories into a single subcategory, called the ''continual discharge'' subcategory (*see* Section III.B.1). Both proposed subcategories operate with a continuous or frequent discharge of wastewater containing similar wastewater pollutants. The recirculating system wastewater discharge typically comes from two sources, backwash from solids removal and overflow water from production tanks, and has similar pollutant concentrations as offline treatment system effluents from flow-through systems. Combined recirculating system discharges (backwash from solids removal and overflow water from production tanks) are also like the wastewater discharged from offline treatment at a flow-through system.

The detailed survey data indicate that nationally 11 facilities use both flow-through and recirculating system technologies. Depending on the facility layout, wastewater from both systems may be commingled for discharge in a single effluent stream. Under the proposal, facilities that commingle recirculating and flow-through system wastewater would be subject to the recombined effluent limits that are the same as the full flow requirements for primary settling.

By combining the flow-through and recirculating systems into a single subcategory, EPA would basically apply two sets of effluent limits. One set would apply to the discharge of full flow effluents, and the other would apply to offline treatment or recirculating system effluents. The flow-through facilities would be subject to the proposed requirements (*i.e.*, remain unaffected by combining the separate subcategories into one), whereas the recirculating systems would be subject to offline treatment requirements. Offline treatment requirements had higher (less stringent) effluent concentration-based limits than the proposed recirculating system limits. They operate with a frequent continual discharge that contain similar wastewater characteristics.

EPA is also considering the same modified options (A & B) for the continual subcategory as for the separate flow-through and recirculating subcategories. Because the continual subcategory would include limits from the separate flow-through and recirculating systems, the results of the analyses for the continual subcategory would be similar to those presented for the separate subcategories. EPA would apply the same requirement for TSS in a continual discharge subcategory to discharges from stand-alone recirculating facilities and offline settling basins. EPA seeks comment on combining these two subcategories into a single subcategory.

3. Net Pen Subcategory

EPA is not considering changes to the proposed options for the net pen subcategory. For facilities that produce more than 100,000 pounds of aquatic animals per year, EPA proposed BPT limits based on:

- Option 3 active feed monitoring (*i.e.*, additional solids removal).
- Developing a BMP plan for solids control.
- General reporting requirements for use of certain drugs and chemicals for facilities.

EPA also proposed to establish BAT equal to BPT because no more stringent options representing BAT were available. EPA proposed to establish BCT equal to BPT because EPA did not identify any more stringent technologies representing BCT were available. Finally, EPA proposed NSPS equal to BAT because the proposed effluent limitations guidelines would be affordable and would not pose a barrier to entry for new source net pens.

V. Revisions to the Cost, Loadings, Economic, and Benefits Models

A. Revisions to Assumptions and Methodology Used in EPA's Cost Analyses

1. Proposed Costing Approach

At proposal, EPA used a model facility approach to estimate the cost of installing or upgrading wastewater treatment to achieve the proposed requirements. As described in the preamble to the proposed regulation (67 FR 57872), EPA developed 21 model facilities (based on the USDA's Census of Aquaculture and EPA's screener survey) characterized by different combinations of production systems, size categories, species and ownership types. We developed regulatory technology options based on screener survey responses, site visits, industry and other stakeholder input, and existing permit requirements.

EPA estimated the cost for each option component for each model facility. We then calculated costs for each regulatory option at each model facility based on model facility characteristics and the costs of the option's technologies or practices corresponding to the option.

EPA estimated frequency factors for treatment technologies and existing BMPs based on screener survey responses, site visits, and sampling visits (*see* Section III.1). Baseline frequency factors represented the portion of the operations that would not incur costs to comply with the proposed requirements because they were already using the technology or practice. EPA adjusted the component cost for each model facility represented by the model to account for those facilities then EPA derived national estimates of costs by aggregating the component costs applicable to each model facility across all model facilities.

2. Revised Costing Approach

EPA's detailed surveys captured information on the treatment in-place at the facility and other site-specific information (such as labor rates). EPA got additional cost information from data supplied from public comments and site visits. With the new data, EPA revised the method to estimate compliance costs. Instead of a model facility approach, EPA is presenting facility-level costs based on the available facility-specific data contained in the detailed survey responses. We then apply statistically-derived survey weights instead of the frequency factors used at proposal to estimate costs to the CAAP industry as a whole.

On the detailed survey, facilities operating flow-through and recirculating production systems reported a variety of BMPs that are used today. These BMPs include:

- Feed management.
- Cleaning of quiescent zones.
- Inventory control.
- Health screening.
- Cleaning screens in tanks or raceways.
- Mortality removal.
- Use of dam boards.
- Flow diversion during harvest and cleaning activities.

The detailed survey did not ask for detailed descriptions of the steps in the BMPs. Therefore, except for the feed management practice (see below), when a facility indicated a particular BMP in place, EPA assumed no additional cost to the facility for implementing that BMP.

The costs associated with BMP plan development include a one-time labor cost of 40 hours to develop and write the plan. The plan that EPA costed included (1) identifying all waste streams, wastewater structures, and wastewater and manure treatment structures at the site, (2) identifying and documenting standard operating procedures for all BMPs used at the facility, and (3) management and staff responsibilities for implementing the plan. We included an annual cost for four hours of management labor to maintain the plan and eight hours of management labor for an annual review of BMP performance. We included the cost of developing a solids control and drugs and chemicals BMP plan in the estimates for all facilities, except those in Idaho and Washington. (Facilities in Idaho and Washington would not incur this cost because NPDES permits in these States already require solids control and drugs and chemicals BMP plans.) EPA found that the components of the BMP plans required in Idaho and Washington are similar to those being considered for the final rule.

In evaluating facilities for solids controls, EPA first checked for evidence of a good feed management program. If the facility reported they practice feed management, EPA looked for evidence of solids management and good operation of the physical plant, including regular cleaning and maintenance of feed equipment and solids collection devices (*e.g.*, quiescent zones, sedimentation basins, screens, etc.). To evaluate the effectiveness of a facility's solids control practices, we calculated feed conversion ratios (FCRs) using pounds of feed per pound of live product (as reported in the detailed survey) and considered existing solids control equipment. We assumed facilities lacking evidence of good feed management or solids control programs would incur additional costs to improve or establish them.

EPA estimated FCRs from data in the detailed survey and follow-up with some facilities and compared FCRs for groups of facilities (*i.e.*, combinations of ownership, species and production system types such as commercial trout flow-through facilities or government salmon flow-through facilities). We found a wide range of FCRs (reported by facilities in their detailed surveys, which were validated by call backs to the facility) among apparently similar facilities within ownership-species-production system groupings.

For example, we had good data for 24 of 60 government trout producers using flow-through systems. They reported a range of FCRs of 0.79 to 1.80 with a median FCR of 1.30. If an individual facility's reported FCR was significantly greater than the median, EPA further evaluated the facility to ascertain the reason for the higher FCR. Facilities that produce larger fish, such as broodstock, might have higher FCRs because the larger fish produce less flesh per unit of food. Facilities with fluctuating water temperatures could also be less efficient than facilities with constant water temperatures. We did not apply costs for solids control BMPs for facilities with reasonable explanations for the higher FCRs. We evaluated facilities that did not report FCRs or provide enough data for an estimate using the methodology described in section III.H.

Costs for the solids control BMP component include staff time for recordkeeping for feed delivery and daily feeding observations. Management activities associated with the solids control plan were weekly data reviews of feeding records, regular estimates of changes to feeding regimes for each group of aquatic animals, and staff consultations about feeding. For facilities with no solids control equipment, we also estimated the costs for primary and secondary solids control. EPA evaluated each facility to identify the configuration of the existing treatment units and what upgrades would be required. We found that most flow-through systems not having any treatment structures can comply with Option 1 by adding a combination of quiescent zones and off-line settling basins. We assume quiescent zones can be retrofitted into existing raceways without expanding them and without impacting production levels in the raceways.

EPA also used industry cost information provided through public comment and the detailed survey to estimate costs for design and installation of primary settling equipment for effective settling of suspended solids. For example, we used the facility-level data included in the detailed survey responses to place and size the off-line settling basins on the facility site. For facilities that use earthen flow-through technologies, EPA estimated costs to construct and operate full flow settling structures rather than quiescent zones and off-line settling.

EPA classified each facility's wastewater treatment system based on the description provided in its survey response and available monitoring data, including DMR data. We assumed that treatment technologies indicated by a facility on the detailed survey are properly sized, installed, and maintained. EPA estimated facility-specific costs for each of the responding direct dischargers and used these estimates as the basis for national estimates. Because the survey did not collect information about many specific parameters used in individual facilities' production processes and treatment systems, EPA supplemented the facility-specific information with typical specifications or parameters from literature, survey results, and industry comments. For example, EPA assumed that facilities have pipes of typical sizes for their operations.

As a consequence of such assumptions, a particular facility might need a different engineering configuration from those modeled if it installed equipment that varies from the equipment or specifications we used to estimate costs. EPA nonetheless considers that costs for these facilities are generally accurate and representative, especially industry-wide. EPA applied typical specifications and parameters representative of the industry to a range of processes and treatment systems. We contacted facilities to get site-specific configuration information where possible.

In revising cost estimates, EPA paid particular attention to:

- Size of tanks, raceways, and culture units.
- Labor rates.
- Treatment components in place.
- BMPs and plans in place.
- Daily operations at the facility.

Site visits and analysis of the detailed surveys indicated that raceways and quiescent zones are cleaned as necessary to maintain system process water quality.

The effective operation of microscreen filters require that they be enclosed in heated buildings to prevent freezing when located in cold climates. EPA's revised estimates of costs for Option 3 are not based on the application of microscreen filters unless the detailed survey response indicated that such a structure existed at the site. When the detailed survey did not indicate a structure at the site, EPA estimated costs for a second stage settling structure rather than a microscreen filter. Based on data from two of EPA's sampling episodes at CAAP facilities, this technology will achieve the proposed limits for Option 3.

EPA agrees with concerns raised in comments that the cost associated with enclosing the filter in a heated structure would be prohibitive. Option B would allow facilities to choose between solids polishing treatment (*e.g.*, second stage settling) and solids control BMPs. For estimating compliance costs, EPA assumes that facilities will choose the least costly method which, in all cases, proved to be using the BMPs. Thus, EPA based Option B costs on the application of solids control BMPs.

To estimate costs for the drugs and chemical component of the BMP plan, EPA first looked at the detailed survey to determine if the facility reported using drugs, chemicals, or medicated feed. The detailed survey also asked if the facility has adopted health management BMPs. Although responses indicated that nearly half of the regulated population has some form of health management practices, we do not have information on the specific activities associated with these practices. Therefore, EPA assumed that all facilities reporting drugs and chemicals would incur additional costs to implement management practices (except in Idaho and Washington). These States have already issued NPDES permits that include requirements for drug and chemical management BMPs similar to those in our cost estimates. (EPA found evidence of other states with similar requirements, but no facilities in these states were in the group of in-scope facilities that responded to the detailed survey.) Costs include staff time for:

- Initial and annual plan review.
- Weekly inspections of storage facility.
- Completion of an application program worksheet (recordkeeping).
- Completion of a disposal worksheet (for out-of-date drugs or chemicals).
- Marking of production units being treated.
- Annual training sessions.

Management activities include:

- Initial plan development.
- Annual review and update of plan.
- Review of application worksheets.
- Leading facility training sessions.
- Quarterly inspections of entire facility.
- Management of veterinary assistance (*e.g.*, implementing vet recommendations).
- Biweekly review of drug and chemical records.
- Staff management consults.

Because therapeutic treatments vary considerably at a facility from year-to-year and also among facilities, EPA estimated the BMP costs based on monthly drug applications throughout the year. We estimated costs for a few hatcheries that produce only eggs and larvae for regular treatments to control fungus during the egg incubation period.

We also considered the use of activated carbon filtration to treat and remove drug or pesticide active ingredients from wastewater. Research indicates that this technology is effective at treating these compounds, and at least one aquatic animal production facility installed this technology. EPA estimated the costs for activated carbon treatment as a stand-alone technology. We estimated costs on a site-specific basis for facilities which reported using drugs and then added these costs for options A, B, 2, and 3 (*see* Section V.C.) to assess the economic achievability of this technology.

EPA estimated the costs to develop and implement escape management practices at facilities where (1) the cultured species was not commonly produced or regarded as native in the State, (2) the facility was a direct discharger, and (3) the species was expected to survive if released. (In contrast, producers of a warm water species in a cold climate, such as tilapia producers in Minnesota or Idaho, would not incur costs for this practice.) Costs for escape prevention include staff time for production unit and discharge point inspections and maintenance of escape prevention devices. We applied these costs to facilities that installed equipment conforming with State requirements for facilities producing non-native species (identified by the State). Management time includes quarterly production unit and discharge point inspections, eight hours a year to review applicable State and Federal regulations, and quarterly staff consultations.

EPA revised estimates for all labor costs using the employee and wage information supplied in the detailed surveys. For those facilities indicating they use unpaid labor for all or part of the facility operation or did not supply useable wage information, we used average State or regional wages.

B. Revisions to Assumptions and Methodology Used in Loadings Analyses

1. Proposed Approach

To estimate the baseline discharge loadings and load reductions for the proposal, EPA used the same model approach described in Section V.A.1. for the costing analyses. We first estimated pollutant loadings for untreated wastewater based on several factors for each model facility. Feed offered to the CAAP species contributed to pollutant discharges in three ways: feces, urine-contributing dissolved ammonia, and uneaten feed (dissolved and particulate forms). These byproducts of feed contribute to the pollutant load in the untreated culture water. EPA used typical efficiency rates of removing specific pollutants from water for the technology options and BMPs we are considering. Using the same frequency factors for technologies in place that were used to estimate costs, we estimated the baseline pollutant loads discharged. We then calculated load reductions for the options.

2. Revised Loadings Approach

Rather than using the proposed model approach, EPA revised the loadings approach to incorporate a facility-level approach using data primarily from the detailed surveys, but also taking into account suggestions concerning appropriate feed conversion ratios (FCRs) provided by commenters. EPA also applied statistically-derived survey weights to get national estimates.

Since pollutant loads are proportional to feed inputs, improving feeding efficiency and reducing wasted (uneaten) feed will reduce pollutants discharged from CAAP facilities. EPA expects that using feed management BMPs will reduce pollutant loads by improving the efficiency of converting feed to the final product (*i.e.*, less feces and uneaten feed). EPA determined pollutant loadings from revised estimates of pollutant loads for a unit of feed input. EPA's re-evaluation of the baseline or current practices changed the loading estimates, reflecting survey responses on practices or treatment-in-place at facilities. The revised results also reflect the estimated FCRs we used in the facility-level analyses (*see* Section III.H).

In its evaluation of data from the facilities responding to the detailed survey, EPA found no apparent relationships that explain why some

facilities use drugs or medicated feeds and others do not. EPA also evaluated the amounts of drugs and medicated feed reported in the detailed survey as used at facilities and found no basis for predicting how much drugs or medicated feed would be used at a given facility. Information reported by facilities did not provide enough detail for EPA to estimate pollutant reductions associated with drug and chemical BMPs.

C. Revisions to Assumptions and Methodology Used in Economic Analyses

Due to new information and comments, EPA is considering several changes in the approaches for economic analysis. EPA seeks comments on the changes. Section VI describes new data and results for the revised economic analyses.

1. Economic Analysis Approach for the Proposed Rule

For the proposed rule, EPA evaluated projected economic impacts using screener questionnaire data which did not include financial or economic information beyond revenues and limited firm-level production data. As a consequence, the impact analysis was based on compliance costs for model facilities, frequency factors for extrapolating costs to a group of facilities represented by a model, and sales or revenue tests. Revenue tests involve simple comparisons of compliance costs with facility revenues. For non-commercial facilities, in lieu of revenues, we imputed a value to their production based on annual harvest and commercial prices. Similar revenues tests were applied to both commercial and non-commercial facilities. We estimated the number of small businesses from a special tabulation of the United States Department of Agriculture (USDA) *Census of Aquaculture* (1998) (for details, see ''Economic and Environmental Impact Analysis of the Proposed Effluent Limitations Guidelines and Standards for the Concentrated Aquatic Animal Production Industry,'' EPA–821–R–02–015, September 2002, DCN 20141).

2. Clarifications Regarding Baseline Assumptions for Economic Analysis

Treatment in Place. In the proposed rule and this notice, EPA characterizes baseline conditions using existing compliance levels and treatment in place. This approach is consistent with past effluent guidelines and EPA's Guidelines for Preparing Economic Analyses (EPA 240–R–00–003, September 2003, DCN 20435) and Office of Management and Budget (OMB) guidelines. OMB guidelines state that '' * * * the baseline should be the best assessment of the way the world would look absent the regulation * * * You may often find it reasonable to forecast the world absent the regulation will resemble the present.'' (OMB. 2002. ''Guidelines to Standardize Measures of Costs and Benefits and the Format of Accounting Statements,'' memorandum from Jacob J. Lew, Director to Heads of Departments and Agencies, M–00–08, March 22, DCN 20385). Thus, EPA does not agree with some commenters' suggestions that baseline conditions for impact analysis should assume no treatment in place.

Consideration of Market Conditions, Market Forecasts, and International Competition. EPA assumed in the proposed rule that CAAP producers cannot pass cost increases through to consumers. We do not expect to change this assumption for the final rule (foreign competition is so strong that the domestic market cannot raise prices at all). EPA used the 1999–2001 data from the detailed questionnaire to reflect current market conditions. We also used several publicly-available data sources to develop market forecasts, ranging from pessimistic to slightly optimistic, for future prices (*see* Section V.C.3.b.i). This approach addresses comments suggesting the need to account for foreign competition and sluggish market outlooks for U.S. aquaculture in the economic analysis for this rule.

3. Revisions of the Approaches and Assumptions Used in the Economic Analysis

Data collected from the detailed questionnaire will form the basis for the economic analysis supporting the final rule. These financial analyses use the standard methodology for developing effluent limitations guidelines with some changes to address impacts to non-commercial (*e.g.*, State, Tribal or Federal government) facilities. Comments recommended changes to the proposed methodology. The following sections describe the revisions, based on comments and the availability of detailed questionnaire responses, to the economic analyses we are considering.

a. *Revisions to Estimates of Numbers of Small Business.* EPA received several comments questioning the number of facilities identified as small businesses in the proposed rule. EPA revised its estimates of affected small businesses based on the results of the detailed survey and designed the detailed questionnaire to collect revenue information for both individual facilities and the companies that own the facilities. We compared these data to Small Business Administration size standards for the industry (up to $750,000 annual revenues). If a facility earned more than the size standard, we did not consider it a small business. If a facility did not earn more than the size standards, EPA examined company revenues to determine whether the company was a small business as defined by SBA. EPA collected public information on company ownership and revenues as needed to complete each determination. At this time, EPA identified 117 facilities out of 522 facilities within the scope of the rule that are owned by small businesses, seven that belong to small organizations, and one that is an academic/research facility.

b. *Revisions to Economic Analyses for Commercial Facilities.* For the final rule, EPA intends to use (1) facility-specific data supplied by the detailed questionnaire, (2) results from forecasting methods (see Section V.C.3.b.i) to improve cost and price estimates, and (3) several economic impact measures that were not used in the proposal. In particular, the detailed questionnaire data should help us address comments suggesting that we underestimated costs and overestimated prices and that our extrapolation of impacts based on model facilities misstated the impacts on many facilities.

i. *Measures of Economic Impacts for Commercial Facilities.* For the final rule, EPA will use several measures to evaluate possible impacts on commercial facilities that we did not use for the proposed rule due to lack of data. These measures examine the possibility of closure, direct impacts on employment and communities, indirect and national impacts, and changes in financial health and borrowing capacity.

Closure Analysis. The closure analysis compares costs from 2005 to 2015 to earnings during the same period. We used two methods to estimate earnings: (1) cash flow and (2) net income. We discounted both costs and earnings with a 7 percent real discount rate to account for the time value of money and place earnings and costs on a comparable basis. To be considered a closure as a result of this rule, a facility must show for two out of three forecasting scenarios (1) positive discounted cash flow (or net income) without the rule and (2) negative discounted cash flow (or net income) with the rule. In the detailed questionnaire, EPA asked commercial respondents whether their facility did more than raise fish. If they did, the questionnaire asked them to report the financial performance of both the

aquaculture enterprise and the entire farm/company. EPA will perform the closure analysis for the enterprise, facility, and company levels. These analyses involve several complexities (*e.g.*, what to consider as earnings, what costs are included, and the number and type of forecasting methods used). Section V.C.3.b.ii contains our detailed responses to comments on these and other aspects of the closure analysis.

Closure Analysis—Forecasting methods. EPA examines the possibility of closure under three forecasting methods to project future earnings. The first method uses U.S. Department of Agriculture (USDA) long-run baseline projections for the Consumer Price Index, Food at Home, Fish and Seafood Sector for 2004 through 2012 (USDA Agricultural Baseline Projections to 2012, Staff Report WAOB–2003–1. February, DCN 20363). This projection reflects the current industry downturn which then changes to a long-run annual increase of 1.5 percent. This index is used to adjust the revenue information in the detailed questionnaire to project revenue in future years.

The second method uses historic time-series data collected and published by several government agencies to estimate price trends and project them into the future. For trout, EPA uses USDA trout price data for 1994–2002 (Trout Production, Sales of fish 12″ or longer, U.S. Average price per pound). For all other fish, EPA uses U.S. Department of Labor, Bureau of Labor Statistics, Fish PPI, Producer Price Index—Unprocessed and packaged fish, not seasonally adjusted, (Series ID: WPU0223) from January 1980 through February 2003. EPA examined Series ID: WPU–223–1–3 (salmon) not seasonally adjusted but could find no trend in the data. EPA converts the data to constant dollars where needed. For time series with monthly observations, EPA converts the series to a 12-month centered moving average to smooth seasonal variations. We performed a regression analysis using this price data to derive kinked trend lines for prices (*e.g.*, Chow Breakpoint Test, see DCN 20366 and DCN 20371 for details). This type of regression allows the slope of the price line to differ before and after suggested breakpoints in time. Both data sets (trout and all fish) show downward trends for prices. We converted price level forecasts into an index using 2001 as the base period (this is the most recent year for which data were collected in the detailed questionnaire). We also applied this index to base year (2001) data from the detailed survey to project future revenues. The third forecasting method assumes constant future revenues using the average of 1999–2001 earnings collected in the detailed questionnaire.

For this notice, EPA projected impacts only when the same impacts occurred using two of the three forecasting methods. EPA seeks comment on basing its closure analysis for the final rule on impacts that occur using one of the three methods.

The forecasting methods give a range of trends (*i.e.*, upward (USDA), downward (estimated price indices), and no change (survey earnings average)). However, EPA expects to adjust the forecasts to reflect more recent data for the final rule, so this range of trends may change (*see* DCN 20450).

Closure Analysis—Baseline Industry Conditions. We can not analyze facilities with negative net earnings under 2 or 3 of the forecasting methods before they incur pollution control costs with the methodology used for the facility closure analysis. EPA seeks comment on omitting such facilities from the closure analysis. Such facilities represent situations such as:

- Start-ups (where the first year of income is negative but does not indicate future earnings)
- Cost centers (that transfer production to other facilities under the same ownership at no cost, or the cost is set to the operating costs)
- Facilities where the company does not record income statement information at the facility level.
- Facilities that are likely to fail with or without the rule.

Direct and Community Impacts. When the analysis projects that a facility will close as a result of the rule, EPA then tracks the direct and indirect impacts from that closure. We consider all associated revenues, production wages, and employment (both paid and unpaid labor and management) lost. We will also examine the increase in local unemployment resulting from the facility closure. These approaches respond to comments that suggested the need to determine how the CAAP industry impacts communities (*e.g.*, employment) in several areas of the country.

Indirect and National Impacts. Impacts on the CAAP industry are known as direct effects. Impacts due to lost CAAP output and employment in sectors that directly support the CAAP industry are known as indirect effects. Induced effects are overall changes in household and business spending due to direct and indirect effects. The U.S. Department of Commerce's Bureau of Economic Analysis (BEA) tracks these effects both nationally and regionally in large ''input-output'' tables, published as the Regional Input-Output Modeling System (RIMS II) multipliers (DCN 20386). EPA used the multipliers for the RIMS II industry number 1.0302 (miscellaneous livestock) because it includes all of SIC code 0273. EPA used national final demand multipliers for output (3.7163) and employment (45.2228) because they include direct, indirect, and induced effects. For example, for every $1 million in output lost due to the projected closure of a CAAP facility, nearly $3.8 million in output and 45 jobs are lost nationwide. When a facility is projected to fail as a result of the rule, EPA may estimate the loss in output associated with facility closure and then use the RIMS II multipliers to estimate national level impacts.

Impact on Financial Health. EPA will calculate impacts on financial health at the company level using USDA's four-state categorization of financial health based on a combination of net cash income and debt/asset ratio (*i.e.*, favorable, marginal solvency, marginal income, and vulnerable). EPA calculates the financial state of each company before and after incremental pollution control costs. EPA considers any change in categorization an impact of the rule.

Impact on Borrowing Capacity (''Credit Test''). Commenters suggested that impacts on borrowing capacity should be considered. Based on several measures used by USDA, EPA developed a method to examine whether a bank would lend a farm/company the amount needed to cover the costs of incremental pollution control. According to the USDA, ''Lenders generally require that no more than 80 percent of a loan applicant's available income be used for repayment of principle and interest on loans'' (DCN 20395, p. 19). EPA considered the income available for debt coverage as after-tax cash flow for 2001 for the farm or company (typically, the worst year represented in the questionnaire data). For sole proprietors, EPA collected data for aquatic animal production from Schedule F or Schedule C from the IRS tax forms submitted with a proprietor's Form 1040. EPA intentionally did not request information from the proprietor's Form 1040 (the Agency specifically excluded the collection of off-farm income data). We multiplied the after-tax cash flow by 80 percent to obtain a proxy for USDA's ''maximum feasible loan payment'' (MFLP). We then calculated the ratio of the pre-tax annualized cost of an option and the after-tax MFLP. We assumed that a bank would compare the pre-tax cost to the

MFLP to be conservative. To be more conservative, EPA identified any company with a ratio exceeding 80 percent of MFLP being impacted under this test (*i.e.*, the test threshold is actually 64 percent of the after-tax cash flow).

ii. *Economic Topics Raised in Comments to the Proposed Rule.* Commenters raised several issues about assumptions for closure analysis including (1) the definition of what constitutes earnings for the discounted cash flow analysis (including questions about how to incorporate depreciation, cash flow, net income, sunk costs, capital replacement, and unpaid labor), (2) forecasting methods used to project earnings, and (3) assumptions EPA makes to address trade impacts.

Cash Flow. In projecting closures, EPA estimated earnings using (1) cash flow and (2) net income. We calculated the difference between gross revenues and total expenses reported in the detailed questionnaire and reduced the value by the estimated federal and State taxes to calculate net income. We then added the non-cash expense of depreciation (when it was reported in the questionnaire) to net income to calculate cash flow. The difference between cash flow and net income is, therefore, depreciation, consistent with the guidance from the Farm Financial Standards Council (FFSC; *Financial Guidelines for Agricultural Producers,* DCN 20095) and several business financial references (DCNs, 20378, 20382, and 20388).

Some commenters were concerned about using cash flow analysis because of how earnings are calculated, the extent of the fixed costs, and, in older facilities, sunk costs. These comments are covered in the following discussions of: (1) Depreciation, (2) sunk costs, (3) capital replacement, and (4) unpaid family labor and management.

Depreciation. Depreciation is an annual allowance for the exhaustion, wear, and tear of a firm's fixed assets. Depreciation reflects a previous expenditure for a fixed asset to which the entity makes no payments in the current period. Although depreciation theoretically reflects wear and tear spread out evenly over the useful life of an asset, depreciation (as calculated for tax purposes) does not. First, the recovery period for costs is shorter than the asset lifetime and, second, accelerated recovery factors are skewed to the initial years of useful life. EPA identified information (*e.g.*, Financial Accounting Standards Board, DCN 20382, DCN 20378, DCN 20388) suggesting that cash flow may be appropriate for some types of economic analyses. EPA seeks comment on the appropriateness of cash flow and net income analyses as they apply to this rulemaking. Because depreciation reported on an accounting statement may or may not correspond to true ''economic'' depreciation, EPA estimated closure impacts with depreciation as an expense (*i.e.*, net income analysis) and without depreciation (*i.e.*, cash flow).

Sunk costs. Some commenters argued that the analysis should consider sunk costs. Comments characterized cash flow analysis as inappropriate because it does not account for sunk costs, particularly in older facilities. Sunk costs paid out of capital (as opposed to financing) already occurred and, therefore, are not incremental cash flows. They should not affect future investment or the economic viability of the firm. Therefore, EPA excludes this category of sunk costs from the closure analysis. Sunk costs that are financed have interest, and this interest is included in interest payments reported in the income statements. Unpaid principle from previously financed sunk costs is reflected in a farm's debt/asset ratio, and EPA will include it in our evaluation of farm financial health and the ability of facilities (or companies) to carry additional debt (*see* Section V.C.3.b.i).

Capital replacement. EPA received comments that the facility financial analysis should include an allowance for capital replacement. EPA evaluated data on capital expenditures and capital replacement. The Census Bureau collects data on annual capital expenditures including forestry, fishing, and agricultural services (U.S. Census Bureau, Annual Capital Expenditures Survey 1999, DCN 20384). However, Census Bureau capital expenditure data includes intra-company transfers of capital equipment and ownership changes (*see* DCN 20384, Appendix D–10, Instructions, Definitions, and Codes List).

As a consequence, it is difficult to know whether capital expenditures help maintain existing production or whether they support expanded production. Capital expenditures for an industry undergoing consolidation, such as salmon, include acquisitions reflecting transfers of capital rather than purchases of new or replacement capital. Further, the Census data includes expansion in productive capacity, whether in new plants or in existing plants. Aggregate industry data on capital expenditures cannot be used to specify the level of capital expenditure that is necessary to maintain productive capacity at an individual facility.

EPA includes costs for capital replacement as they occur within the depreciation and interest payments reported on income statement. When EPA relies on net income calculations, capital replacement costs (as approximated by financial depreciation, in addition to interest payments captured in cash flow) are considered in the closure analysis. Capital replacement costs that are capitalized and not expensed are reflected in the asset, debt, and equity components of the balance sheet as appropriate. Past capital replacement costs are represented in the farm financial health measures and credit tests that are based on balance sheet data. When estimating compliance costs, EPA includes replacement costs for pollution control capital. EPA's cost estimates include all capital expenditures (whether initial or replacement) that are projected to occur within the 10-year analytical time frame.

Unpaid family labor and management. EPA received suggestions that the financial analysis of aquatic animal production should include a ''proxy'' cost to reflect unpaid family labor and management. Unpaid family labor and management is ''unpaid'' only with respect to the income statement. Distributions from the business to cover family living and other personal expenses are generally referred to as ''family living withdrawals'' or ''owner withdrawals.'' These withdrawals are shown in the statement of owner equity in the balance sheet and not the income statement. As a consequence, the financial health and credit tests incorporate any withdrawals from equity for unpaid labor and management, because these tests are based on balance sheet data. Note that EPA includes estimates for labor costs when estimating compliance costs in order to include the effects of the additional labor and management in closure analysis. EPA also includes unpaid labor and management as lost jobs in the total count of lost employment from facilities projected to close as a result of the rule.

EPA reviewed USDA Economic Research Service data on off-farm income by farm category (USDA, 2003. Economic Research Service. Agriculture Income and Finance Outlook. AIS–80. March, DCN 20396). USDA data indicate that farm operation's contribution to total household income ranges from a substantial amount for ''Very Large Farms'' to a negative contribution that is subsidized by off-farm income for limited resource and

''small low-sales farms.'' These data indicate that it is possible for labor to earn a zero or negative return in the short run. EPA recognizes that, under standard economic theory, an enterprise in which labor is earning no return, either as wages or profit, is unlikely to be viable in the long run. The Farm Financial Standards Council also discusses the issue of unpaid labor (DNC 20095, pp. II–3 and II–22). EPA does not estimate a charge for unpaid labor when calculating farm income under discounted cash flow or net income analysis for this NODA. However, EPA seeks comment on whether it should impute a cost for unpaid labor and management in the closure analysis and, if so, on what data and methods the wage should be based.

c. Revisions to Economic Analyses for Non-commercial Facilities. EPA uses a methodology for non-commercial facilities where pre-tax annualized costs are compared with the operating budgets for Federal, State, Tribal (owned and operated by Tribal governments), and research facilities. For Alaskan non-profit facilities, EPA compares pre-tax annualized costs to reported salmon revenues. EPA is also considering calculations, such as the increased need for taxes or fees to cover the additional costs, that can be made as detailed questionnaire data permit. EPA seeks comment on methodologies for investigating impacts on non-commercial operations, including methods for characterizing the implications or consequences of percent reductions in facility budgets.

D. Revisions to Assumptions and Methodology Used in Benefits Analyses

The proposal established limits for total suspended solids (TSS) loads from flow-through and recirculating systems and required practices to minimize accumulation of excess feed from net pen systems. These requirements, according to EPA loadings calculations, would reduce facility discharges of TSS, total nitrogen (TN), total phosphorus (TP), and biochemical oxygen demand (BOD). The proposal also required facility operators to minimize releases of non-native species, pathogens, and therapeutants. At proposal, EPA did not quantify baseline or regulated loads for these latter parameters.

Reductions in these loadings (TSS, TN, TP, BOD, non-native species, pathogens, and therapeutants) could affect water quality, the uses supported by varying levels of water quality, and other aquatic environmental variables (*e.g.*, primary production and populations or assemblages of native organisms in the receiving waters of regulated facilities). EPA discussed several of these possible responses to loading reductions qualitatively at proposal. The proposal also estimated the monetized benefits based on changes in the recreational use value of freshwater streams affected by the rule.

EPA anticipates that its overall approach for characterizing benefits for the final rule will be similar to that used for the proposed rule. The proposal approach involved three efforts. First, EPA developed an estimate of national monetized benefits of the rule. We derived the monetized benefit estimate by applying (1) the QUAL2E (a water quality model) to a range of model facilities and receiving water conditions and (2) an economic monetization method that related water quality improvements to monetized benefits. Second, EPA discussed the possible impacts from rule-related reductions in BOD, TN, TP, and TSS loads on stream water quality relative to national water quality criteria. This discussion was primarily qualitative. Third, EPA included qualitative discussions of possible benefits of the rule that could not be quantified. Examples of such possible benefits include those that might arise from reductions in releases of non-native species or reductions in inadvertent spills of drugs and chemicals used at CAAP facilities. Again, these were qualitative discussions only, and EPA neither quantified nor monetized these possible benefit areas. While we expect to retain this overall approach, the Agency may revise inputs, methods, or information in each of these areas. Sections V.D.1–V.D.3 discuss these improvements further.

EPA's analysis of possible benefits of the final rule will address public comments about the proposal benefits analysis. We received some comments addressing the Agency's water quality-based monetized benefit estimate. One commenter criticized EPA's monetized benefit estimate as insufficiently reflecting the value of water quality. Other commenters asserted that EPA overestimated environmental benefits of the regulation. One of these commenters argued that EPA's use of frequency factors led to overestimation of benefits. Another commenter questioned whether EPA should extrapolate estimates of freshwater benefits for reductions in pollutant discharges to Alaska facilities that are discharging to marine environments. This commenter also asserted that, in many nutrient-poor streams where salmonid fish are found, hatchery-related nutrients lead to improved downstream fishing, and that a rule-related reduction in these nutrient inputs should be subtracted from EPA's benefits estimate.

In addition to comments on EPA's monetized benefit estimate, EPA received some comments on whether and how to characterize benefits from rule-related reductions in discharges of non-native species, pathogens, antibiotics or other therapeutants, and other chemicals. One commenter argued that it is extremely complex and controversial to make statements about benefits as a result of controlling non-native species, pathogens, antibiotics, or chemical releases is extremely complex and controversial.

1. Revisions to Monetized Benefits Estimate

At proposal, EPA used an approach for estimating national benefits from rule-related improvements in water quality that relied on (1) simulating improvements in downstream water quality parameters for model facilities, and (2) applying a monetization method that related changes in water quality to ''willingness to pay'' (WTP) values for water quality improvements. For the monetization method, we combined four simulated water quality parameters to generate a water quality index (WQI–4). The parameters were dissolved oxygen (DO), biochemical oxygen demand (BOD), total suspended solids (TSS), and fecal coliform (FC). Because we do not expect loadings for FC to be discharged from CAAP facilities, we assumed that background levels of this parameter remain unchanged. The WQI is a 0–100 scale that weighs each water quality parameter to reflect its significance for determining the suitability of water for progressively more demanding uses. We converted changes in the WQI–4 to monetary values based on a contingent valuation survey (Carson and Mitchell, 1993, DCN 20157).

At proposal, data were not available for site-specific estimates of water quality responses to reduced pollutant loadings. Neither were they available for facility-specific estimates of pollutant loadings and loading reductions nor individual facility locations for all potentially regulated facilities. Therefore, to simulate possible ranges in downstream water quality improvements for regulated facilities, we used estimates of pollutant loadings and loading reductions for representative (''model'') facilities and a hypothetical receiving water with a wide range of assumed background water quality and flow conditions. We used the Enhanced Stream Water Quality (QUAL2E) model to perform these simulations. We then applied the

monetization method described above to calculate WTP values for the simulated water quality improvements for each model facility. Finally, we estimated and summed WTP values for other potentially regulated facilities of that model facility type to produce a national benefit estimate. (For more details of the methodology, see DCN 20141).

We expect to apply a similar water quality modeling and monetization approach for estimating water quality-related benefits. However, we expect that the final methodology will address certain limitations that we did not recognize at proposal. We will take advantage of refined estimates of facility loads. That is, we will improve the water quality-related benefits analysis using:

- Significantly improved facility-specific loadings estimates based on new data from the detailed surveys and new information on feed conversion ratios (FCRs). These improved loadings estimates help us evaluate contributions of specific facilities to improved water quality (*see* Section V.B).
- Site-specific water quality simulations using new information from the survey on the geographical distribution of facilities. EPA intends to use specific facility receiving water simulations when data are available, and model receiving water conditions when data are unavailable, for an individual site.
- A more refined method for selecting a subset of QUAL2E application sites from which we can develop a national benefits estimate. Sites will be selected based on the availability of data (*e.g.*, water quality and discharge data) for model calibration. The sites should represent geographic regions and environmental conditions where most of the facilities are located. We expect to select between five to ten QUAL2E application sites.
- An improved method for calculating the WQI that better reflects water quality changes associated with CAAP discharges. The WQI that EPA used previously included four water quality parameters (WQI–4). EPA more recently developed a six-parameter WQI (''WQI–6'') based on TSS, BOD, DO, FC, plus nitrate (NO_3) and phosphate (PO_4). The new index more completely reflects the type of water quality changes that will result from loading reductions for TSS, total nitrogen (TN), total phosphorus (TP), and BOD. We may present results from both the WQI–4 and WQI–6 indices in the final benefits analysis for the CAAP rule.
- An improved method for monetizing water quality benefits. We based the water quality benefits monetization method we used for the proposed rule on results from a stated-preference survey conducted by Carson and Mitchell (1993) (DCN 20157). We divided household willingness-to-pay (WTP) values for changes in recreational water ''use classes'' by the number of WQI–4 points in each use class. We assigned a portion of the value for each unit change to achieving the whole step. Recently, EPA developed an alternative approach, also based on Mitchell and Carson's work. The authors also expressed their results as an equation relating a household's WTP for improved water quality to the change in the water quality index and household income. An important feature of this approach is that it is less sensitive to the baseline use of the water body. This approach is also consistent with economic theory in that it exhibits a declining marginal WTP for water quality. (See more information on this approach in DCNS 40138 and 40595.) Caution must be used in manipulating valuations derived from stated preference surveys, but this valuation function approach helps address some concerns about earlier applications of the water quality benefits monetization method. (See DCN 40595 for a more detailed discussion.)

2. Other Revisions to Benefits Analysis About Reductions in BOD, TN, TP, and TSS Loads

At proposal, EPA examined additional ways of characterizing environmental benefits from rule-related reductions in BOD, TN, TP, and TSS loads using the same QUAL2E modeling results from the proposal monetized benefits estimate. Specifically, we compared water quality in receiving streams simulated by QUAL2E modeling with national water quality criteria for DO, ammonia, TN, and TP. EPA discussed this comparison in light of the possibility for rule-related reductions in exceedences of these criteria. We did not monetize the results of that evaluation. They were intended to illustrate an alternate indicator of possible rule-related changes in water quality (Section 10.5.1., DCN 20141).

For the final benefits analysis, EPA may update this evaluation in several ways. First, we expect to use the improved site-specific water quality modeling results described in Section V.D.1. for the comparison with national water quality criteria. We are also evaluating the possibility of using an aquatic ecosystem model to further translate load reductions and water quality changes at a subset of facilities into other ecosystem changes (*e.g.,* effects on benthic fauna, fish populations, and other ecosystem variables). The model, AQUATOX (*http://www.epa.gov/waterscience/models/aquatox/),* represents stream, river, lake, reservoir, and pond ecosystems by modeling:

- Periphyton.
- Moss.
- Macrophytes.
- Major guilds and taxonomic groups of invertebrates and fish, as well as phytoplankton.

The model can also simulate constant or time-varying discharges of BOD, nutrients, and TSS like those that might be discharged by a CAAP facility. Finally, we expect to update our discussions of research literature that describes water quality impacts. We will consider literature that we have compiled since the proposal as well as information from stakeholder comments (see Sections II.E and III.E). As at proposal, the purpose of these analyses is to provide supplemental information of possible rule-related benefits to receiving waters.

3. Other Revisions to Benefits Analysis

EPA concurs with one commenter's assertion that determining benefits of non-native species, pathogens, antibiotics, or chemical releases from facilities is complex and controversial. Ideally, an analysis of benefits from mandated reductions in such discharges would draw from an understanding of environmental impacts from each discharge; quantitative estimates of both baseline discharges and reductions in discharges under any regulatory regime; and the relationship between changes in discharges and environmental response. In some cases, economic valuation techniques can then be applied to monetize the environmental responses. In the case of water quality improvements due to reductions in TSS, BOD, and nutrients from flow-through and recirculating systems, this information is available for estimates of quantitative and monetized benefits of the rule.

In most other cases, EPA will not estimate monetized or even quantitative benefits. Rather, we will discuss qualitative benefit areas including:

- Possible benefits from reducing escapes of non-native species, recognizing existing State and other requirements for escapes and mitigation (see Section II.E.3), and
- Possible benefits from reducing inadvertent releases of applied chemicals (including therapeutic substances) from CAAP facilities (see Sections II.E.2 and III.C).

VI. Revised Estimates of Costs and Economic Impacts

EPA revised estimates of costs and economic impacts based on the detailed survey results, comments, information from States, and methodological changes (*see* Section V). In the tables presented in Section VI, the options labeled ''Option 1'', ''Option 2'', and ''Option 3'' correspond to the options presented in the proposal, but the revised costs are based on detailed questionnaire data and other factors. EPA also considered two additional sets of requirements listed as ''Option A'' and ''Option B'' in the economic analysis. These analyses incorporate costs and loadings that reflect assumptions for feed conversion ratios (FCR) and production for those facilities that did not report these in the detailed questionnaire (*see* Section V.A.2). For cost annualization and the closure analysis, we used a 7 percent discount rate. Results are in 2001 dollars. Additional details about costs and impacts are provided in the record (DCN 20446). EPA will consider these revised results for all options in its decisions for the final rule.

Table VI.1 summarizes the types of public and private organizations that operate facilities represented in the national population of in scope facilities (*i.e.*, after applying the survey weights). Facilities that might incur costs include all facilities in the proposed subcategories that are large enough to meet the current CAAP definition. At proposal, EPA proposed to exclude facilities with less than 100,000 pounds of annual production; however, for information purposes, we included these facilities in the Tables in this Section. At proposal, EPA indicated that it would continue to analyze the costs and impacts associated with including such facilities (meeting the CAAP definition) within the scope of the rule. Facilities listed in the tables as not incurring costs would still be within the scope of the rule if they exceed the final production thresholds; however, EPA does not expect that these facilities would have to do anything more to meet the requirements of the regulation.

TABLE VI.1.—ESTIMATED NUMBER AND TYPE OF ORGANIZATIONS

Organization	Estimated number of facilities		
	Would incur costs	Would not incur costs	Total
Commercial	181	15	196
Academic/Research	1	0	1
Government	302	1	303
Tribal	14	0	14
Alaska Non-profits	7	0	7
Total	506	16	522

Note: We calculated the national estimates with survey weights and rounded them to whole numbers in each cell. Numbers may, therefore, not sum due to rounding.

Table VI.2 provides more detailed information on the facilities estimated to incur costs under the rule. There are 141 unweighted facilities (questionnaire respondents) that correspond to a national estimate of 506 facilities (*see* Section II.D). Table VI.2 further differentiates facilities by production system, size (in terms of lbs/yr production), owner, and the number of facilities that are projected to be baseline closures (assuming cash flow analysis), before we include compliance costs (*see* Section V.C.3.b.i). Table VI.2 also shows the number of facilities we used to derive cost and facility closure results, assuming discounted cash flow analysis. EPA proposed different requirements for the size of facilities. You will find the proposed option for each category in the right-hand column in Table VI.2.

TABLE VI.2.—NUMBER AND TYPE OF FACILITIES

Production system	Size (lbs/yr)	Owner	Estimated number of facilities					Options at proposal
			Potentially in scope	Incur costs	Baseline closures [1]	In cost totals [2]	In closure analysis [3]	
Flow-Through	20,000 to 100,000 [4]	Commercial	75	75	25	50	45	
		Non-commercial	135	135	0	135	NA	
		Alaska Non-profit	7	7	0	7	NA	
	100,000 to 475,000	Commercial	62	62	8	54	54	Option 1.
		Non-commercial	121	121	0	121	NA	Option 1.
	475,000+	Commercial	26	26	15	11	11	Option 3.
		Non-commercial	46	46	0	46	NA	Option 3.
Recirculating	20,000 to 100,000 [4]	Commercial [4]	6	6	n.d.	n.d.	n.d.	
		Non-commercial	n.d.	n.d.	n.d.	n.d.	n.d.	
	100,000 to 475,000	Commercial	7	7	1	6	6	Option 3.
	475,000+	Commercial	n.d.	n.d.	n.d.	n.d.	n.d.	Option 3.
		Non-commercial	n.d.	n.d.	n.d.	n.d.	n.d.	Option 3.
Mixed Flow-Through Recirculating.	20,000 to 100,000	Non-commercial	11	11	0	11	NA	
Net Pen	20,000 to 100,000	Non-commercial	1	0	0	n.d.	NA	
	100,000 to 475,000	Commercial	n.d.	n.d.	n.d.	n.d.	n.d.	Option 3
	475,000+	Commercial	15	0	0	0	0	Option 3

TABLE VI.2.—NUMBER AND TYPE OF FACILITIES—Continued

Production system	Size (lbs/yr)	Owner	Estimated number of facilities					Options at proposal
			Potentially in scope	Incur costs	Baseline closures [1]	In cost totals [2]	In closure analysis [3]	
Total			522	506	59	452	447	

n.d. Not disclosed for reasons of confidentiality.
NA not applicable.
[1] Numbers of commercial facilities that are projected baseline closures assuming cash flow analysis. Section VI.B.1.a discusses baseline closures using net income.
[2] Facilities used to derive values in Table VI.A.1. Excludes baseline closures (based on cash flow analysis) which we assume will close before promulgation and, thus, incur no costs under the rule.
[3] Facilities used to derive values in Table VI.B.1. Excludes baseline closures (based on cash flow analysis), start-ups, and other facilities where we did not have enough information to conduct closure analysis.
[4] Facilities with less than 100,000 pounds annual production were not within the scope of the proposed rule.

Table VI.3 breaks out the estimated 181 commercial facilities with costs by financial organization. Slightly over half (55 percent) of the commercial facilities are organized as corporations. C and S corporations are named after the Subchapters in the IRS code under which they are organized and are taxed in different ways. C corporation earnings are taxed at the corporate rate. S corporation earnings are paid to individuals, who then pay taxes at the personal rate on those earnings.

TABLE VI.3.—COMMERCIAL FACILITIES WITH COSTS BY FINANCIAL ORGANIZATION

Financial organization	Estimated number of facilities
C Corporation	42
S Corporation	58
Sole Proprietorship	49
Limited Partnership	24
General Partnership	5
Other	5
Total	181

Note: Numbers do not sum due to rounding.

A. National Cost Estimates

Table VI.A.1 summarizes the cost of the rule by subcategory. We estimated national costs on the number of facilities we expect to incur compliance costs if they exceed the production threshold in the final rule. We assume that possible compliance costs will occur in all facilities that are not baseline closures. This includes some facilities for which EPA could not make baseline closure determinations (*e.g.*, start-up operations, facilities with insufficient data) that we excluded from the closure analysis. The number of baseline closures increases under net income analysis, implying that national costs decrease when we use net income analysis (*see* Table VI.B.2). Table VI.2 indicates that non-commercial flow-through facilities make up about two-thirds of the facilities projected to incur costs. They incur about 80 to 83 percent of the total cost for each option.

TABLE VI.A.1.—NATIONAL COSTS—TOTAL BY SUBCATEGORY AND OPTION [1]

Production system [2]	Owner	Pre-tax annualized costs [4] (thousands, 2001 dollars)				
		Option A	Option B	Option 1	Option 2	Option 3
Flow-through	Commercial 20–100K production	$45	$50	$22	$50	$89
	Commercial 100–475K production	151	371	315	362	779
	Commercial >475K production	17	17	7	17	53
	Non-commercial	1,351	2,796	2,528	2,794	5,612
	Alaska Non-profit	141	172	165	176	188
Recirculating	Commercial [3]	8	8	3	8	8
	Non-commercial	18	55	44	60	81
	Alaska Non-profit	0	0	0	0	0
Net Pen	Commercial	0	0	0	0	0
	Non-commercial	0	0	0	0	0
	Alaska Non-profit	0	0	0	0	0
Total	Pre-Tax	1,731	3,469	3,084	3,466	6,809
	Post-Tax	1,693	3,375	3,004	3,372	6,695

[1] Does not include costs for facilities projected to close before implementation of the rule, where baseline closures are determined using cash flow. Number of baseline closures increases if net income is used, implying decreased costs.
[2] Costs for facilities that use both flow-through and recirculating technologies were divided according to production and placed in the appropriate category. For example, for a facility that splits production equally between flow-through and recirculating, we would split costs equally and add to flow-through and recirculating costs.
[3] All costs for the recirculating commercial category in the table are incurred by facilities producing between 20,000 and 475,000 lbs. Due to the small number of facilities (*i.e.*, confidentiality) in the recirculating category, costs are not presented by size.
[4] Cost equaling zero ($0) in the table indicate that facilities already meet the requirements of the option. Zero cost does not imply that facilities are exempt.

Note: Numbers do not sum due to rounding.

Due to differences in option requirements for the various subcategories, as well as differences in facility counts between the proposed rule and this notice, it is difficult to compare costs in Table VI.A.1 directly to costs for the proposal (67 FR 57908). As a consequence, Table VI.A.2 facilitates comparisons between costs at proposal and costs summarized in this notice.

TABLE VI.A.2.—COMPARISON OF COSTS—PROPOSAL AND NOTICE OF DATA AVAILABILITY (NODA)

Production system	Total pre-tax annual costs (2001$)	
	Proposal	NODA
Flow-through	$1,032,942	$2,076,456
Recirculating	46,354	5,409
Net Pens	35,322	0

Note: Proposal costs, taken from Table IX.G.1 (67 FR 57908) of the preamble from the proposed rule, were inflated to 2001 dollars. For closest comparison to proposal results, NODA results in this table do not include costs for facilities that produce 20,000 to 100,000 lbs/year. We assume Option 1 for flow-through facilities in the size category 100,000 to 475,000 lbs/yr, and we assume Option 3 for all other flow-through and recirculating facilities.

B. Economic Analysis

Sections VI.B.1 and VI.B.2 provide details about the impact analysis for commercial and non-commercial facilities.

1. Economic Results for Commercial Facilities

EPA projects economic impacts based on two procedures for estimating earnings: (1) cash flow analysis and (2) net income analysis. Table VI.B.1 summarizes the economic impacts for commercial facilities based on cash flow analysis, and Table VI.B.2 summarizes results based on net income analysis. All impacts fall on flow-through systems: no impacts fall on recirculating or net pen systems. No impacts fall on facilities with flow-through systems that produce more than 475,000 lbs per year.

TABLE VI.B.1.—IMPACTS FOR COMMERCIAL FLOW-THROUGH FACILITIES (CASH FLOW BASIS) [1]

Analysis level [2]	Impact	Size (1,000 lbs/yr)	Number of entities in analysis [3]	Option				
				A	B	1	2	3
Facility	Closure	100–475	54	5	5	5	5	11
	Direct Employment Loss (lost jobs).	100–475	54	5	5	5	5	24
	Increase in County Unemployment Rate (%).	100–475	54	<0.2	<0.2	<0.2	<0.2	<1
	National Employment Loss	100–475	54	20	20	20	20	90
	National Loss in Output ($ millions).	100–475	54	$1.6	$1.6	$1.6	$1.6	$7.4
	Sales test: >1 percent	20–100	50	15	15	5	15	25
		100–475	54	13	23	21	23	29
	Sales test: >3 percent	20–100	50	10	10	0	10	10
		100–475	54	5	11	11	11	16
Company	Closure		32	1	1	1	1	2
	Farm Financial Health [4]		43	1A	1A	1A	1A	1A 1B
	Credit Test		32	1	1	1	1	2

[1] All impacts fall on flow-through systems; recirculating or net pen systems display no impacts. In addition, facilities with flow-through systems that produce more than 475,000 lbs per year display no impacts.

[2] Rows are shown only when there are impacts. The 20,000 to 100,000 size category shows impacts only under the 1 percent and 3 percent sales test. No impacts at enterprise level or for 475,000 lb/yr or more size category (see DCN 20446 for details); no closure analysis at the enterprise level was conducted for facilities that are projected to close.

[3] Number of entities projected to incur compliance costs and are not baseline closures, assuming cash flow analysis, and for which enough data were available. For closure analysis, this is the number of weighted facilities or the unweighted number of companies. The statistical procedure used to draw the sample and develop the facility survey weights do not allow us to make inferences about company characteristics at the national level. Of the facilities projected to incur costs in this NODA, more than 90 percent are single facility companies.

[4] 1A: one company shifts from marginal solvency to vulnerable.
1B: one company shifts from favorable to vulnerable.

TABLE VI.B.2.—IMPACTS FOR COMMERCIAL FACILITIES (NET INCOME BASIS) [1]

Analysis level [2]	Impact	Size (1,000 lbs/yr)	Number of entities in analysis [3]	Option				
				A	B	1	2	3
Facility	Closure	20–100	45	5	5	0	5	5 [6]
		100–475	50	5	5	5	5	11
	Direct Employment Loss (lost jobs).	20–100	45	14	14	0	14	14
		100–475	50	5	5	5	5	24

TABLE VI.B.2.—IMPACTS FOR COMMERCIAL FACILITIES (NET INCOME BASIS) [1]—Continued

Analysis level [2]	Impact	Size (1,000 lbs/yr)	Number of entities in analysis [3]	Option				
				A	B	1	2	3
.....	Increase in County Unemployment Rate (%).	20–100	45	<0.1	<0.1	0	<0.1	<0.1
		100–475	50	<0.2	<0.2	<0.2	<0.2	<1
	National Employment Loss	20–100	45	26	26	0	26	26
		100–475	50	20	20	20	20	90
	National Loss in Output ($ millions).	20–100	45	$2.1	$2.1	$0.0	$2.1	$2.1
		100–475	50	$1.6	$1.6	$1.6	$1.6	$7.4
	Sales test: >1 percent	20–100	50	15	15	5	15	25
		100–475	54	13	23	21	23	29
	Sales test: >3 percent	20–100	50	10	10	0	10	10
		100–475	54	5	11	11	11	16
Company [5]	Closure		26	2	2	1	2	3
	Farm Financial Health [4]		.....	2A	2A	2A	2A	2A
			43					1B

[1] All impacts fall on flow-through systems; recirculating or net pen systems display no impacts. In addition, facilities with flow-through systems that produce more than 475,000 lbs per year display no impacts.

[2] Rows are shown only when there are impacts. No impacts at enterprise level, recirculating, or net pen systems, or for flow-through facilities in the 475,000 lb/yr or more size category; we did not conduct closure analysis at the enterprise level for facilities that are projected to close.

[3] Number of entities projected to incur costs and are not baseline closures, assuming net income analysis, and for which enough data were available. For the closure analysis, this is the weighted number of facilities or the unweighted number of companies. The statistical procedures we used to draw the sample and develop the facility survey weights do not support inferences on a national level about company characteristics. Of the facilities projected to incur costs in this NODA, more than 90 percent are single facility companies.

[4] 2A: two companies shift from marginal solvency to vulnerable. 1B: one company shifts from favorable to vulnerable.

[5] Credit test not performed on net income basis because USDA methodology specifies maximum feasible loan payment (MFLP) be calculated from borrower's cash flow, without deducting depreciation.

[6] Due to rounding of survey weights, the total number of facilities (20,000 to 475,000 size categories) projected to close under Option 3 is 15, not 16.

a. Closure Analysis Results. For commercial facilities, EPA examined the possibility of closure on several levels: enterprise, facility, and company. Sixteen respondents to the detailed survey supplied enterprise level financial information in Question C9 of the detailed survey. EPA based the facility closure analysis on the facility financial data supplied in Question C.6 of the detailed survey. The company level analysis differs from the facility analysis in that it reflects costs for all aquatic animal production facilities owned by the company. To identify all sites belonging to each company, we compiled a list of companies from the costed facilities (45 companies) and examined the screener survey data and responses to Question 2. Where EPA did not have detailed survey data for a particular facility, we assigned the average cost for the other facilities owned by that company.

Section V.C.3.b describes the forecasting methods and closure methodology. The analysis predicts that about one-third of the facilities (*e.g.*, 64 of 181 commercial facilities) fall into the closure category under baseline conditions (*i.e.*, they show negative long-term earnings before the rule). This is consistent with comments indicating the industry has gone through difficult times in the recent past. We could analyze all sixteen enterprises for impacts (*i.e.*, none failed in the baseline). We did not conduct closure analysis at the enterprise level when the facility was projected to close. No impacts are estimated to occur at the enterprise level under any of the regulatory options. Thirteen of the 45 companies are projected as baseline failures.

Based on cash flow analysis, five flow-through facilities close as a result of the added costs under Options A, B, 1, and 2, (Table VI.B.1). We do not expect any other types of facilities to close under these options. The closures result in the direct loss of five jobs and an increase in the county unemployment rate of less than 0.2%. We estimate national impacts to be a loss of 20 jobs (includes the five jobs lost from facility closure) and $1.6 million in output (calculated with the Commerce Department, Bureau of Economic Analysis, Regional Input-Output Modeling System (RIMS II) final demand multipliers for the miscellaneous livestock industry (industry code 1.0302).

The analysis also shows that, under Option 3, eleven flow-through facilities close as a result of the added costs. We do not expect any other types of facilities to close under this option. These closures result in the direct loss of 24 jobs and an increase in the county unemployment rate of up to 1 percent, depending on the location. We estimate National level impacts to be a loss of 90 jobs and $7.4 million in output.

EPA also conducted a facility level closure analysis using net income rather than cash flow (Table VI.B.2). The difference between the two is depreciation, a non-cash charge theoretically representing the capital ''used up'' during operation. Cash flow is calculated as net income plus depreciation (see Section V.C.3.b for comparison of cash flow and net income). We predict 84 of the 181 facilities to be baseline closures before incurring incremental pollution control cost, representing 46% of the population. We estimate 35% of facilities to be baseline closures under the discounted cash flow analysis. The results are the same for Option 1 for net income analysis: five facilities are still projected to fail. A single unweighted facility represents the five facilities that fail under Option 1. This facility uses cash basis accounting and does not record depreciation as a cost. That is, the earnings estimate is the same for the cash flow and net income versions of the closure analysis. Under Options A, B, and 2, we project ten facilities to close (as opposed to five closures projected using discounted cash flow) with an associated loss of 19 jobs. The increase in the number of projected failures using net income is due to a

single unweighted facility failing the closure analysis. Under Option 3, we project that 15 facilities will close with an associated loss of 38 jobs. Using discounted cash flow analysis, we project that 11 facilities will close.

b. Financial Health Results. EPA uses the USDA farm financial health test (see Section V.C.3.b.i) that categorizes farms into four categories:

- Favorable (positive income and debt/asset ratio no more than 40 percent)
- Marginal income (negative income and debt/asset ratio no more than 40 percent)
- Marginal solvency (positive income and debt/asset ratio more than 40 percent)
- Vulnerable (negative income and debt/asset ratio more than 40 percent)

Two of the 45 companies did not supply complete balance sheet information in the detailed survey and were not analyzed using the farm financial health test. Under Options A, B, 1, and 2, one company shifts from marginal solvency to vulnerable. Baseline closures, based on the discounted cash flow and net income analyses, were not excluded from the financial health test. Under Option 3, a second company shifts from favorable to vulnerable under the cash flow analysis (Table VI.B.1). We conducted this analysis at the company level. Both companies that shift categories are small and produce between 100,000 and 475,000 lbs/yr. Financial health results under net income analysis (Table VI.B.2) are similar, except that two companies shift from ''marginal solvency'' to ''vulnerable'' instead of the one company under cash flow analysis.

c. Credit Test Results. EPA examined whether commercial companies would be unable to get credit for expenses associated with compliance (see Section V.C.3.b.i above), assuming cash flow analysis. We did not use the credit test under net income analysis as noted in Table VI.B.2. All 45 companies provided the data needed for the credit test. One company/facility fails the credit test under Options A, B, 1, and 2. Under Option 3, a second company fails the credit test. We also conducted this analysis at the company level. Both companies that fail the credit test are small and produce between 100,000 and 475,000 lbs/yr.

d. Sales or Revenue Test Results. The sales or revenue test is calculated on a facility basis. This test corresponds to the sales test performed at proposal but is calculated on the basis of detailed survey information for the facility. Impact results under the sales test, using cash flow analysis, are the same as sales test results using net income analysis. For the 20,000 to 100,000 lb/year category, five facilities ''fail'' the one percent sales test (*i.e.*, compliance costs that exceed one percent of sales) under Option 1 (see Table VI.B.2). Fifteen facilities fail under Options A, B, and 2, and 25 facilities fail under Option 3. For the 3 percent sales test for this size group, ten facilities ''fail'' (*i.e.*, compliance costs that exceed 3 percent of sales) under Options A, B, 2 and 3. No facilities fail under Option 1. For the 100,000 to 475,000 lb/year category, 13 facilities fail the 1 percent test under Option A, 21 facilities fail test under Option1, 23 facilities fail under Options B and 2, and 29 facilities fail under Option 3. For the 3 percent sales test for this size group, 5 facilities fail under Option A, 11 facilities fail under Options B, 1, and 2, and 16 fail under Option 3.

Due to differences in option requirements for the subcategories and differences in facility counts between the proposed rule and this NODA, it is difficult to compare sales test results in Table VI.B.1 with results in the proposed rule (67 FR 57906, Table IX.E.1). As a consequence, we present Table VI.B.3 to facilitate comparisons between proposal and NODA. The only test in both the proposal and NODA analyses is the 3 percent revenue test. Even this is not strictly comparable for non-commercial facilities because the denominator in the ratio changed from imputed revenues at proposal to operating budget for the NODA.

The threshold levels shown in Table VI.B.1 (*i.e.*, 1% and 3%) do not necessarily reflect the threshold levels that EPA will use to measure regulatory impacts for the final rule using a revenue test. For the Agency's final regulatory analysis, EPA anticipates using the same revenue test thresholds that were used to evaluate impacts for the proposed rule: greater than 3 percent, greater than 5 percent, and greater than 10 percent. EPA solicits comment on these thresholds.

TABLE VI.B.3.—COMPARISON OF 3% REVENUE TEST, NODA AND PROPOSAL RESULTS

Size	Facilities regulated	Facilities incurring costs greater than 3% of revenue or budget
Proposal:		
Commercial	78	25
Non-Commercial	57	0
NODA:		
Commercial	71	11
Non-Commercial	169	30

Notes: To allow for closest comparison to results at proposal, NODA results in this table do not include costs or loads for facilities that produce 20,000 to 100,000 lbs/year. We assume Option 1 for flow-through facilities in the size category 100,000 to 475,000 lbs/yr and Option 3 for all other flow-through and recirculating facilities. Alaska non-profit facilities that we previously thought produce greater than 100,000 pounds actually produce less than 100,000 pounds annually. They are, therefore, not included in the Table.

e. Sensitivity Analysis for Commercial Impacts. EPA estimated ranges of impacts (DCN 20430) based on minimum, mean, and maximum values for operating and maintenance (O&M) costs for Options B, 1, 2, and 3 (see Section V.A.2 for cost estimates and estimation procedures), assuming earnings based on cash flow analysis. There are no differences in impacts for commercial facilities between the minimum and mean O&M costs. Under maximum O&M costs, we project that another five facilities (weighted) will close under Options B, 2, and 3. Under the maximum O&M, weighted employment losses total 5 under Options A and 1, 22 under Options B and 2, and 40 under Option 3. There is no difference in the change in local unemployment rate among the minimum, mean, and maximum O&M costs.

EPA also examined other technology options, using activated carbon, for removing drugs. As part of sensitivity

analysis, EPA also examined the economic impacts for Options A, B, 2, and 3 with and without activated carbon costs (DCN 20443), assuming earnings based on cash flow analysis. These options include BMPs, but not treatment for drugs and chemicals. Activated carbon could be used to treat CAAP effluent for drugs. We estimated the costs for activated carbon treatment to analyze the impacts of requiring treatment as well. When we add activated carbon costs (costs for drug and chemical BMPs subtracted to avoid double-counting costs), direct employment losses are about four times higher, and company closure and financial health impacts are roughly double. About one in four companies would have difficulty raising the capital to meet the activated carbon costs (*e.g.*, six to nine companies fail the credit test with the activated carbon costs).

2. Economic Results for Non-commercial Facilities

The non-commercial category includes four types of facilities: Federal and State hatcheries, tribal operations, academic or research facilities, and Alaska non-profit organizations. We performed the economic analysis on 302 Federal and State facilities, 14 Tribal operations, one academic/research, and seven Alaska non-profits. These facilities are not operated commercially, and the types of tests used to examine impacts on commercial facilities are not applicable. Each group is slightly different, and we will discuss the economic tests performed on each group within each section.

a. Federal and State Facilities. For Federal and State facilities, EPA compared the pre-tax annualized costs to the 2001 operating budget (''budget test''). Table VI.B.4 summarizes the results by production system, test threshold, and size. Of the 302 Federal and State facilities, 39 have Option A costs that we project will exceed one percent of the budget (35 flow-through and four mixed flow-through and recirculating facilities). We project that 27 of these 39 facilities have costs that will exceed 3 percent of budget. For Option B, 120 have costs that we project will exceed one percent of the budget. We project that 75 of these 120 facilities have costs that will exceed three percent of budget. For Option 1, we project that 112 have costs that will exceed one percent of the budget. Fifty-nine of these 112 facilities have costs that we project will exceed three percent of budget. For Option 2, 123 have costs that we project will exceed one percent of the budget. We project that 71 of these 123 facilities have costs that will exceed three percent of budget. For Option 3, 223 (nearly three-fourths of the population) have costs that we project will exceed one percent of the budget. Of these 223 facilities, 108 have costs that we project will exceed three percent of budget.

The threshold levels shown in Table VI.B.4 (*i.e.*, 1% and 3%) do not necessarily reflect the threshold levels that EPA will use to measure regulatory impacts for the final rule using a budget test. For the Agency's final analysis, EPA anticipates using the same thresholds that are used to evaluate impacts a revenue test: greater than 3 percent, greater than 5 percent, and greater than 10 percent. EPA solicits comment on these threshold levels.

TABLE VI.B.4.—BUDGET TEST NON-COMMERCIAL FACILITIES

Production technology	Budget threshold	Size (1,000 lbs/yr)	Estimated number of facilities in analysis	Number of facilities estimated to exceed budget threshold by option [1]				
				A	B	1	2	3
Flow Through	1%	20–100	135	20	55	51	55	89
		100–475	121	15	49	46	49	88
		475+	46	0	8	11	11	39
	3%	20–100	135	16	40	32	40	48
		100–475	121	12	27	19	23	45
		475+	46	0	4	4	4	11
Recirculating	1%	20–100	n.d.	0	0	0	0	0
		475+	n.d.	0	0	0	0	0
	3%	20–100	n.d.	0	0	0	0	0
		475+	n.d.	0	0	0	0	0
Mixed	1%	20–100	11	4	8	4	8	8
	3%	20–100	11	0	4	4	4	4

n.d. not disclosed to protect confidentiality.
[1] Numbers in Table may not sum to numbers in text due to rounding

Part C of the detailed survey asked the respondent for the portion of the budget due from user fees, such as angler licenses, commercial fishing licenses, car vanity plates, and special purpose stamps. EPA examined the number of facilities that could pass through increased costs to the public by increasing user fees. Where user fees were already in place, we estimated the size of the increase they would need to cover the incremental costs (''User Fee'' analysis, see Section V.C.3.c) (see Table VI.B.5). Costs for thirty-nine facilities exceed one percent of the operating budget under Option A (20 flow-through facilities that produce between 20,000 and 100,000 lb/yr, 15 flow-through facilities that produce between 100,000 and 475,000 l/yr, and 4 mixed facilities producing between 20,000 and 100,000 lb/yr, shown in Table VI.B.4). Twenty-three of the 39 facilities do not have user fees. Of the remaining 16 facilities, eight can offset the increased costs by increasing user fees by less than five percent. The other eight facilities would need more than a five percent increase in user fees to offset the incremental costs incurred under Option A. Between 60 percent and 70 percent of the facilities that have costs that exceed one percent of budget do not have user fees through which to offset increased pollution control costs.

TABLE VI.B.5.—USER FEE ANALYSIS FOR NON-COMMERCIAL FACILITIES

User Fee Increase	Estimated number of facilities that have costs exceeding threshold							
	Percent of budget							
	1 Percent				3 Percent			
	All	20 to 100	100 to 475	475+	All	20 to 100	100 to 475	475+
Option A:								
All	39	23	15	0	27	16	12	0
No Fee [1]	23	12	12	0	23	12	12	0
>5 Percent [2]	8	8	0	0	4	4	0	0
<5 Percent [2]	8	4	4	0	0	0	0	0
Option B:								
All	120	63	49	8	75	44	27	4
No Fee [1]	76	34	34	8	50	27	19	4
>5 Percent [2]	28	20	8	0	24	16	8	0
<5 Percent [2]	16	9	7	0	1	1	0	0
Option 1:								
All	112	55	46	11	59	36	19	4
No Fee [1]	76	34	31	11	35	19	12	4
>5 Percent [2]	24	16	8	0	24	16	8	0
<5 Percent [2]	12	5	7	0	0	0	0	0
Option 2:								
All	123	63	49	11	71	44	23	4
No Fee [1]	80	34	34	11	46	27	15	4
>5 Percent [2]	28	20	8	0	24	16	8	0
<5 Percent [2]	16	9	7	0	1	1	0	0
Option 3:								
All	223	96	88	39	108	51	45	11
No Fee [1]	143	57	52	35	77	34	32	11
>5 Percent [2]	41	24	17	0	30	16	13	0
<5 Percent [2]	38	16	19	3	1	1	0	0

[1] Facilities that exceed threshold and do not rely on user fees.
[2] Facilities that must raise fees by more/less than 5% (>5%/<5%) to cover compliance costs.

b. Tribal Facilities. Tribal operations that returned detailed surveys are all owned and operated by the tribal government and operate on a non-commercial basis. EPA performed a budget test and determined that no Tribal facility incurs costs in excess of three percent of budget under any Option. Five of 14 facilities have costs that exceed one percent of their budgets under Option 3. No Tribal facility fails the one percent budget test under Options A, B, 1, and 2. For additional information about analyses for Tribal facilities, see DCN 20447.

c. Academic/Research Facilities. Of the academic/research facilities that returned a detailed survey, only one met the criteria of being a CAAP within the scope of the rule, and might incur costs under the rule. EPA performed the budget test and determined that the facility would not incur costs in excess of one percent of budget.

d. Alaska Non-profit Facilities. EPA analyzed the impact of possible costs on Alaska non-profit facilities by comparing the pre-tax annualized cost to reported salmon revenues. Alaska non-profits may harvest and market salmon that return to their release areas. We excluded grants, enhancement tax revenue, and income from miscellaneous sources such as visitor centers from the comparison. Fiscal Year 2000 had an unusually high salmon return (*i.e.*, large harvest). Therefore, we used Fiscal Year 2001 data from Alaska (2002, DCN 20074). For Option A, costs range from 0.97 to 1.8 percent of salmon revenues for 1998, 1999, and 2001 and 0.6 percent of salmon revenues for 2000. For Options B, 1, and 2, costs range from 1.2 to 2.3 percent of salmon revenues for 1998, 1999, and 2001 and 0.6 to 0.7 percent of salmon revenues for 2000. For Option 3, costs range from 1.3 to 2.4 percent of salmon revenues for 1998, 1999, and 2001 and 0.7 percent of salmon revenues for 2000.

e. Sensitivity Analysis for Non-commercial Facilities. EPA estimated ranges of impacts (DCN 20430) based on minimum, mean, and maximum value for operating and maintenance (O&M) costs (*see* Section V.A.2 for costing methods) for Options B, 1, 2, and 3. Table VI.B.6 summarizes the results for the sensitivity analysis for non-commercial facilities. For the one percent budget test, the impacts based on the mean values would not increase markedly if maximum O&M values were assumed. On the other hand, if evidence appears that the O&M costs resemble the minimum values, the impacts would drop by about half compared to impacts under mean O&M costs for Options B, 1, and 2. For the three percent budget test, the impacts associated with the maximum O&M costs are approximately three times higher than the impacts associated with minimum costs for Options B, 1, and 2. There is less than a two-fold spread for Option 3.

TABLE VI.B.6.—NUMBER OF NON-COMMERCIAL FACILITIES THAT HAVE COSTS EXCEEDING BUDGET THRESHOLDS

[O&M sensitivity analysis]

Budget test	O&M cost assumption	Option				
		A	B	1	2	3
1 Percent	Minimum	39	61	49	61	199
	Mean	39	120	112	123	223
	Maximum	39	134	126	134	223
3 Percent	Minimum	27	42	38	42	83
	Mean	27	75	59	71	108
	Maximum	27	112	112	112	134

EPA also examined alternative technology options for removing drugs, using activated carbon. As part of sensitivity analysis, EPA also examined the economic impacts for Options A, B, 2, and 3 with and without activated carbon costs (DCN 20443), assuming earnings based on cash flow analysis. Activated carbon could be used to treat CAAP effluent for drugs. These options include BMPs, but not treatment for drugs and chemicals. By estimating the costs for activated carbon treatment, EPA analyzed the impacts of requiring treatment as well. When activated carbon costs are added (costs for drug and chemical BMPs were subtracted to avoid double-counting costs), direct employment losses are about four times higher, and company closure and financial health impacts are roughly double. About one in four companies would have difficulty raising the capital needed to meet the activated carbon costs (*e.g.*, six to nine companies fail the credit test with the activated carbon costs).

C. Cost-effectiveness and Cost-reasonableness Analysis

EPA performed a revised nutrient cost-effectiveness (CE) and cost reasonableness (CR) analysis based on revised estimates of costs, loadings and removals (*see* Development Document for details). We do not expect benchmarks or thresholds for assessing CE/CR results to differ from those used in the proposed rule (that is, $4/lb for nitrogen, $10/lb for phosphorus cost-effectiveness and $0.73/lb for cost-reasonableness (*see* 68 FR 7249–7250 for discussion of benchmarks)). Option costs include costs for BMP components that address invasive species, drugs, and chemicals that have no effect on nutrients, BOD, or TSS. That is, cost-effectiveness and cost-reasonableness values are overstated.

1. Nutrient Cost-effectiveness Results

The tables in this section provide the nutrient cost-effectiveness values for nitrogen and phosphorus. Table VI.C.1 presents the results for nitrogen by production system, commercial and non-commercial sector, and option. For commercial flow-through facilities, the average cost-effectiveness for nitrogen is $24/lb for Option A and ranges from $11/lb to $14/lb for the other options. Incrementally, the effects of the different BMP requirements result in Options B, 1, and 2 having the same removals but different costs. The incremental calculations are based on the option with the lowest of the three costs (*e.g.*, Option 1) and ranges from $6/lb to $12/lb. Nutrient cost-effectiveness values are higher for non-commercial facilities. The average cost-effectiveness for nitrogen is $1,096/lb for Option A, and cost-effectiveness ranges from $30/lb to $49/lb for the other options. Again, we base the incremental calculations on the option with the lowest of the three costs with the same removals and ranges from $20/lb to $23/lb.

For commercial recirculating facilities, the table shows no average and incremental cost-effectiveness value for nitrogen because no nitrogen is removed. For non-commercial recirculating facilities, no nitrogen removals are seen for Option A. For the remaining options, average cost effectiveness ranges from $183/lb to $518/lb, and incremental cost-effectiveness ranges from $112/lb to $232/lb.

TABLE VI.C.1.—NUTRIENT COST-EFFECTIVENESS: NITROGEN

Subcategory, sector, and option	Pre-tax annualized costs ($2001)	Nitrogen removals (lb)	Cost-effectiveness ($2001/pound)	
			Average	Incremental
Commercial Flow-Through				
Option A	$213,030	8,970	$24	[1] $24
Option 1	344,350	30,998	11	6
Option 2	429,441	30,998	14	NA
Option B	438,443	30,998	14	NA
Option 3	920,663	79,960	12	12
Non-Commercial Flow-Through				
Option A	$1,492,671	1,362	$1,096	[1] $1,096
Option 1	2,692,963	60,203	45	20
Option B	2,968,001	60,203	49	NA
Option 2	2,969,498	60,203	49	NA
Option 3	5,799,459	194,534	30	23

TABLE VI.C.1.—NUTRIENT COST-EFFECTIVENESS: NITROGEN—Continued

Subcategory, sector, and option	Pre-tax annualized costs ($2001)	Nitrogen removals (lb)	Cost-effectiveness ($2001/pound)	
			Average	Incremental
Commercial Recirculating				
Option 1	$2,784	0	[2]	[2]
Option A	7,744	0	[2]	[2]
Option B	7,744	0	[2]	[2]
Option 2	7,744	0	[2]	[2]
Option 3	7,744	0	[2]	[2]
Non-Commercial Recirculating				
Option A	$17,594	0	[2]	[2]
Option 1	44,268	115	385	232
Option B	55,107	115	480	NA
Option 2	59,558	115	518	NA
Option 3	80,965	443	183	112

NA: The option higher costs, not related to nutrient removal, and equal removals compared to previous options.
[1] Option A is incremental to baseline, so the average and incremental values are the same.
[2] Undefined: Option costs are costs for BMP components that address invasive species, drugs, and chemicals that have no effect on nutrients, or facilities in these groups have adequate treatment to achieve requirements for pollutants in this table (*i.e.*, no incremental removals are estimated).

Table VI.C.2 presents the results for phosphorus by production system, commercial and non-commercial sector, and option. For commercial flow-through facilities, the average cost-effectiveness for phosphorus is $131/lb for Option A; the average cost-effectiveness ranges from $41/lb to $81/lb for the other options. Incrementally, the effects of the different BMP requirements result in Options B, 1, and 2 having the same removals but different costs. The incremental calculations are based on the option with the lowest of the three costs (*e.g.*, Option 1), and the incremental cost-effectiveness is estimated to be roughly $34/lb to $35/lb. Nutrient cost-effectiveness values are higher for non-commercial facilities. The average cost-effectiveness for phosphorus is $925/lb for Option A and ranges from $112/lb to $258/lb for the other options. Again, the incremental calculations are based on the option with the lowest of the three costs (*e.g.*, Option 1) with the same removals and ranges from $77/lb to $121/lb.

For commercial recirculating facilities, the average and incremental cost-effectiveness for phosphorus is undefined for commercial because no phosphorus is removed. For non-commercial recirculating facilities, no phosphorus removals are seen for Option A. For the remaining options, average cost effectiveness ranges from $481/lb to $2,987/lb and incremental cost-effectiveness ranges from $247/lb to $1,338/lb.

TABLE VI.C.2.—NUTRIENT COST-EFFECTIVENESS: PHOSPHORUS

Subcategory, sector, and option	Pre-tax annualized costs ($2001)	Phosphorus removals (lb)	Cost-effectiveness ($2001/pound)	
			Average	Incremental
Commercial Flow-Through				
Option A	$213,030	1,631	$131	$131[1]
Option 1	344,350	5,396	64	35
Option 2	429,441	5,396	80	NA
Option B	438,443	5,396	81	NA
Option 3	920,663	22,290	41	34
Non-Commercial Flow-Through				
Option A	$1,492,671	1,614	$925	$925[1]
Option 1	2,692,963	11,510	234	121
Option B	2,968,001	11,510	258	NA
Option 2	2,969,498	11,510	258	NA
Option 3	5,799,459	51,976	112	77
Commercial Recirculating				
Option 1	$2,784	0	[2]	[2]
Option A	7,744	0	[2]	[2]
Option B	7,744	0	[2]	[2]
Option 2	7,744	0	[2]	[2]
Option 3	7,744	0	[2]	[2]

TABLE VI.C.2.—NUTRIENT COST-EFFECTIVENESS: PHOSPHORUS—Continued

Subcategory, sector, and option	Pre-tax annualized costs ($2001)	Phosphorus removals (lb)	Cost-effectiveness ($2001/pound)	
			Average	Incremental
Non-commercial Recirculating				
Option A	$17,594	0	[2]	[2]
Option 1	44,268	20	2,220	1,338
Option B	55,107	20	2,764	NA
Option 2	59,558	20	2,987	NA
Option 3	80,965	168	481	247

NA: The option higher costs, not related to nutrient removal, and equal removals compared to previous options.
[1] Option A is incremental to baseline, so the average and incremental values are listed as being the same.
[2] Undefined: Option costs are costs for BMP components that address invasive species, drugs, and chemicals that have no effect on nutrients, or facilities in these groups have adequate treatment in place to achieve requirements for pollutants in this table (*i.e.*, no incremental removals are estimated).

Due to differences in option requirements for the subcategories, as well as differences in facility counts between the proposed rule and this NODA, it is difficult to compare cost-effectiveness values in Tables VI.C.1 and VI.C.2 directly to cost effectiveness values for the proposed rule. As a consequence, Table VI.C.3 facilitates comparisons between proposal and this NODA.

TABLE VI.C.3.—COMPARISON OF NUTRIENT RESULTS—PROPOSAL AND NODA

Production system	Total pre-tax annual costs ($2001)	Average nutrient cost effectiveness (TN+TP)		Average nutrient cost effectiveness (TN)		Average nutrient cost effectiveness (TP)	
		Removals	$/lb	Removals	$/lb	Removals	$/lb
Proposal							
Flow-Through	1,032,942	66,103	15.63	50,273	20.55	15,830	65.25
Recirculating	46,354	32,453	1.43	25,090	1.85	7,363	6.30
Net Pens	35,322	86,890	0.41	74,477	0.47	12,413	2.85
NODA							
Flow-Through	2,076,456	114,933	18.07	92,026	22.56	22,907	90.65
Recirculating	5,409	0	[1]	0	[1]	0	[1]
Net Pens	0	0	[1]	0	[1]	0	[1]

Note: Proposal costs, taken from Table IX.G.3 of the preamble from the proposed rule, were inflated to 2001 dollars. NODA results do not include costs or loads for facilities that produce 20,000 to 100,000 lbs/year. Option 1 is assumed for flow-through facilities in the size category 100,000 to 475,000 lbs/yr; Option 3 is assumed for all other flow-through and recirculating facilities.
[1] Undefined.

2. Cost-reasonableness Results

Table VI.C.4 shows the cost-reasonableness values for conventional pollutants. EPA estimated BOD and TSS removals for each facility for each option. Because BOD can be correlated with TSS, EPA selected the higher of the two values (not the sum) to avoid possible double-counting of removals. In general, TSS is the more frequently the higher of the two. In Option 3 for example, TSS is higher than BOD in nearly four out of five facilities. For commercial flow-through facilities, cost-reasonableness ranges from $1.53/lb to $1.94/lb for Options A, B, 1, and 2. Option 3 shows a lower cost-reasonableness value than for the other options—$0.64/lb. For non-commercial flow-through facilities, cost-reasonableness is $1.01/lb for option A and ranges from $1.18/lb to $1.70/lb for the other options. While cost-reasonableness is less than $2/lb for all options for flow-through facilities, it is undefined for commercial recirculating facilities and ranges from $5/lb to $100/lb for non-commercial recirculating facilities.

TABLE VI.C.4.—COST-REASONABLENESS: BOD AND TSS

Subcategory, sector, and option	Pre-tax annualized costs ($2001)	BOD and TSS Removals (lb) [1]	Cost-reasonableness ($2001/pound)
Commercial Flow-Through			
Option A	213,030	114,162	1.87
Option 1	344,350	225,797	1.53
Option 2	429,441	225,797	1.90

TABLE VI.C.4.—COST-REASONABLENESS: BOD AND TSS—Continued

Subcategory, sector, and option	Pre-tax annualized costs ($2001)	BOD and TSS Removals (lb) [1]	Cost-reasonableness ($2001/pound)
Option B	438,443	225,797	1.94
Option 3	920,663	1,447,954	0.64
Non-commercial Flow-Through			
Option A	1,492,671	1,480,192	$1.01
Option 1	2,692,963	1,743,075	1.54
Option B	2,968,001	1,743,075	1.70
Option 2	2,969,498	1,743,075	1.70
Option 3	5,799,459	4,925,784	1.18
Commercial Recirculating			
Option 1	2,784	0	[2]
Option A	7,744	0	[2]
Option B	7,744	0	[2]
Option 2	7,744	0	[2]
Option 3	7,744	0	[2]
Non-commercial Recirculating			
Option A	17,594	0	[2]
Option 1	44,268	598	73.98
Option B	55,107	598	92.09
Option 2	59,558	598	99.53
Option 3	80,965	16,150	5.01

[1] EPA determines the higher of BOD or TSS mass removal for each facility and then aggregates pounds across facilities.
[2] Undefined: Option costs are costs for BMP components that address invasive species, drugs, and chemicals that have no effect on BOD or TSS, or facilities in these groups have adequate treatment to achieve requirements for pollutants in this table (*i.e.*, no incremental removals are estimated).

Due to differences in option requirements for the subcategories and differences in facility counts between the proposed rule and this NODA, it is difficult to compare results in Table VI.C.4 directly to values in the proposed rule. As a consequence, Table VI.C.5 facilitates comparisons between proposal and this NODA.

TABLE VI.C.5.—COMPARISON OF COST-REASONABLENESS RESULTS—PROPOSAL AND NODA

Proposal				NODA		
Production system	Total pre-tax annual costs ($2001)	Conventional pollutant removals	Average cost per pound ($/lb)	Total pre-tax annual costs ($2001)	Conventional pollutant removals	Average cost per pound ($/lb)
Flow-Through	1,032,942	4,450,465	0.23	2,076,456	2,524,102	0.82
Recirculating	46,354	638,365	0.07	5,409	0	[1]
Net Pens	35,322	868,899	0.04	0	0	[1]

Note: Proposal costs, taken from Table IX.G.1 of the preamble from the proposed rule, were inflated to 2001 dollars. NODA results do not include costs or loads for facilities that produce 20,000 to 100,000 lbs/year. Option 1 is assumed for flow-through facilities in the size category 100,000 to 475,000 lbs/yr; option 3 is assumed for all other flow-through and recirculating facilities.
[1] Undefined.

D. Small Business Analysis

EPA evaluates the economic impacts of proposed and final rules on small entities where required by the Regulatory Flexibility Act (RFA) as amended by the Small Business Regulatory Enforcement Fairness Act of 1996 (SBREFA). The RFA/SBREFA defines several types of small entities, including small governmental jurisdictions (population less than 50,000), small organizations (not-profit organization that is independently owned and operated and is not dominant in its field), and small businesses. The CAAP industry includes sites that fall within the North American Industry Classification codes 112511 (finfish farming and fish hatcheries). The Small Business Administration size standard for this code is $0.75 million. A facility is owned by a small business if its corporate parent earns $750,000 or less in annual revenues.

For the purposes of the RFA, Federal, State, and Tribal governments are not considered small governmental jurisdictions (EPA, 1999, DCN 20121). Thus, facilities owned by these governments are not considered small entities, regardless of their production levels. EPA identified no public facilities owned by small local governments in the analysis. For the purpose of this rulemaking, EPA considers many of the non-profit organizations that produce salmon for the State of Alaska to be ''small.'' These non-profit facilities have assumed a public function: to raise fish (in this case salmon) in hatcheries to be released into the wild to supplement wild populations and sustain the Alaska

commercial and recreational fishing industries.

Among the costed facilities, EPA identified 117 facilities belonging to small businesses, seven belonging to small organizations, and one academic/research facility. For commercial facilities, the small business results for the facility closure analysis and associated loss in jobs and increase in local unemployment rates, financial health, credit test, and the sales test results for 20,000 to 100,000 lb/yr category are the same as those presented in Table VI.B.1 (see DCN 20448 for details about small business analysis), assuming cash flow analysis. That is, all these impacts fall on small businesses. The only difference from Table VI.B.1 is in the one percent sales test for the 100,000 to 475,000 lb/yr category, where the number of facilities exceeding the test threshold drops from 54 to 53 when restricted to small businesses.

VII. Solicitation of Comments

A. Alligator Production

As discussed in the proposal, alligator production is not subject to Part 451. As ascertained through contacts with industry experts, alligator production facilities do not discharge effluents from their production systems. Instead, effluents are treated in one-or two-stage lagoons and then applied to crop or forested land. EPA verified the information by reviewing the data from the detailed survey. Alligator producers do not meet the definition of a CAAP because they do not exceed the minimum threshold of discharging 30 days annually. In EPA's view, after having reviewed detailed data, these operations are not CAAPs and are similarly operated to CAFOs. EPA may recommend to permit writers that they consider applying requirements similar to CAFOs when permitting alligator production facilities. EPA seeks comment on whether this would be an appropriate approach for these operations.

B. BMPs

EPA also seeks comment on BMP language that might be included in the final rule or accompanying guidance. For example, in Idaho's general permit, these practices by CAAP facilities are prohibited to ensure protection of State Water Quality Standards for hazardous materials, deleterious materials, and floating, suspended or submerged matter.

- Discharging hazardous materials is prohibited.
- Discharging sludge, grit, and accumulated solid residues associated with CAAP operations and fish processing is prohibited.
- Practices (e.g., the removal of dam boards in raceways or ponds) which allow accumulated solids to be discharged to waters of the United States is prohibited.
- Discharging untreated cleaning wastewater (e.g., obtained from a vacuum or standpipe bottom drain system or rearing/holding unit disinfection) to waters of the United States is prohibited.
- Sweeping, raking, or intentionally discharging accumulated solids from raceways or ponds to waters of the United States is prohibited.
- Containing, growing or holding fish within an offline or full-flow settling basin is prohibited.

EPA seeks comments on whether these prohibitions, or any other specific requirements for BMP plans, should be included in the final rule or accompanying guidance.

EPA also seeks comment on whether it should modify the structure of the proposed BMP provisions so that the regulation would require specific best management practices and, separately, require sources to develop a BMP plan describing how they intend to meet those requirements. For example, EPA proposed that the BMP plan for flow-through systems must minimize excess feed entering the aquatic animal production system. (See proposal at 40 CFR 451.15(a); see also proposal at 40 CFR 451.25(a) (recirculating systems).) EPA may restructure the regulation so that a source would be required by its NPDES permit to minimize excess feed and, separately, to develop a BMP plan to describe how the source intends to comply with that requirement. Under this approach, the BMP plan, while required by permit, would simply be a tool to help the source implement the substantive permit requirement: minimizing excess feed. EPA also seeks comment on whether to require review of BMP plans by the permitting authority and, if so, how such a requirement should be expressed.

C. Disposal of Drugs and Chemicals

Information on practices for the disposal of drugs and chemicals is limited. EPA seeks comment on existing practices for the disposal of expired drugs and chemicals.

D. Differentiating Between Warm and Cold Water Species

Data from two warm water facilities indicated that they appear to comply with the proposed limits, but EPA recognizes that such facilities can have different wastewater characteristics than cold water species production facilities. EPA seeks comments and data regarding the ability or inability of warm water facilities to achieve the proposed limits for either flow-through or recirculating system effluents, as appropriate.

E. Combining the Proposed Recirculating and Flow-Through Subcategories Into One Subcategory

EPA may combine flow-through production systems and recirculating systems under a single subcategory with two sets of effluent limits: one that would apply to the discharge of full flow effluents and one that would apply to off-line treatment or recirculating system effluents. We received several comments indicating that there is not a clear distinction between recirculating and flow-through systems. EPA seeks comments on the establishment of a continuous discharge subcategory which would apply to wastewater discharges from both recirculating and flow-through systems.

F. Revised Economic Impact Methodology

For this notice, EPA projected impacts only when they occur using two out of the three forecasting methods. EPA seeks comment on basing its closure analysis for the final rule on impacts that occur using one of the three methods.

G. Factoring Unpaid Labor Charges in the Impact Analysis

EPA is not estimating a charge for unpaid labor reported by CAAP facilities when conducting its economic impact analysis. EPA seeks comment on methods and data that support the estimation of charges for unpaid labor and management in cash flow and net income analyses.

H. Facilities Excluded From the Economic Impact Analysis

Facilities that are excluded from closure analysis include:

- Start-ups (where the first year of income is negative yet this is not indicative of future earnings).
- Cost centers (that transfer production to other facilities under the same ownership at no cost or the cost is set to the operating costs).
- Facilities where the company does not record income statement information at the facility level.
- Facilities that are likely to close under baseline conditions without regard to the rule.

EPA seeks comment on omitting such facilities from the closure analysis.

Dated: December 19, 2003.

G. Tracy Mehan, III,

Assistant Administrator, Office of Water.

[FR Doc. 03–31867 Filed 12–24–03; 8:45 am]

BILLING CODE 6560–50–P

Reader Aids

Federal Register

Vol. 68, No. 248

Monday, December 29, 2003

CUSTOMER SERVICE AND INFORMATION

Federal Register/Code of Federal Regulations	
General Information, indexes and other finding aids	**202–741–6000**
Laws	**741–6000**
Presidential Documents	
Executive orders and proclamations	**741–6000**
The United States Government Manual	**741–6000**
Other Services	
Electronic and on-line services (voice)	**741–6020**
Privacy Act Compilation	**741–6064**
Public Laws Update Service (numbers, dates, etc.)	**741–6043**
TTY for the deaf-and-hard-of-hearing	**741–6086**

ELECTRONIC RESEARCH

World Wide Web

Full text of the daily Federal Register, CFR and other publications is located at: **http://www.access.gpo.gov/nara**

Federal Register information and research tools, including Public Inspection List, indexes, and links to GPO Access are located at: **http://www.archives.gov/federal__register/**

E-mail

FEDREGTOC-L (Federal Register Table of Contents LISTSERV) is an open e-mail service that provides subscribers with a digital form of the Federal Register Table of Contents. The digital form of the Federal Register Table of Contents includes HTML and PDF links to the full text of each document.

To join or leave, go to **http://listserv.access.gpo.gov** and select *Online mailing list archives, FEDREGTOC-L, Join or leave the list (orchange settings);* then follow the instructions.

PENS (Public Law Electronic Notification Service) is an e-mail service that notifies subscribers of recently enacted laws.

To subscribe, go to **http://listserv.gsa.gov/archives/publaws-l.html** and select *Join or leave the list* (or change settings); then follow the instructions.

FEDREGTOC-L and **PENS** are mailing lists only. We cannot respond to specific inquiries.

Reference questions. Send questions and comments about the Federal Register system to: **info@fedreg.nara.gov**

The Federal Register staff cannot interpret specific documents or regulations.

FEDERAL REGISTER PAGES AND DATE, DECEMBER

67013–67356 1
67357–67584 2
67585–67786 3
67787–67936 4
67937–68232 5
68233–68486 8
68487–68716 9
68717–69000 10
69001–69294 11
69295–69582 12
69583–69940 15
69941–70120 16
70121–70420 17
70421–70688 18
70689–70994 19
70995–72396 22
74161–74466 23
74467–74828 24
74829–75106 29

CFR PARTS AFFECTED DURING DECEMBER

At the end of each month, the Office of the Federal Register publishes separately a List of CFR Sections Affected (LSA), which lists parts and sections affected by documents published since the revision date of each title.

1 CFR

Proposed Rules:
11 70191

3 CFR

Proclamations:
7529 (See Proc. 7741) 68483
7576 (See Proc. 7741) 68483
7463 (See EO 13321) 74465
7740 67787
7741 68483
7742 68999
7743 69293
7744 69939
7745 74463

Executive Orders:
11582 (See EO 13320) 69295
13119 68233
13183 (Amended by EO 13319) 68233
13320 69295
13321 (See Proc. 7763) 74465

Administrative Orders:
Memorandums:
Memorandum of March 5, 2002 (See Proc. 7741) 68483
No. 2004–10 of December 6, 2003 74455
No. 2004–11 of December 8, 2003 74457
No. 2004–12 of December 9, 2003 74459
No. 2004–13 of December 11, 2003 74461

4 CFR

27 69297
28 69297
29 69297

5 CFR

919 74461
970 74461
1600 74450
1601 74450
1603 74450
1604 74450
1605 74450
1606 74450
1640 74450
1645 74450
1650 74450
1651 74450
1653 74450
1655 74450
1690 74450

Proposed Rules:
890 74513

7 CFR

51 69941
56 68487
70 68487
91 69944
96 69944
319 70421
354 67937
772 69948
905 68717
966 70689
1220 69953
1412 67938
1421 67938
1901 69948
1942 69001
1951 .....69948, 69954
2200 74412
2201 74412

Proposed Rules:
60 71039
275 70193
319 70448
810 70201
900 67381
929 69343
1124 74874
1131 74874
1230 70201
2902 70730

8 CFR

264 67578

9 CFR

Proposed Rules:
55 74513
81 74513

10 CFR

72 .....70121, 70423

Proposed Rules:
35 68549
50 67811
72 70463
300 68204
850 68276
851 68276

11 CFR

4 70426
100 .....67013, 69583
102 67013
106 69583
111 70426
114 69583
9004 69583
9034 69583

12 CFR

3.....70122, 74467
5.....70122, 70691
6.....70122
7.....70122
9.....70122
11.....68489
16.....68489
22.....74467
28.....70122, 70691
34.....70122
203.....74829
225.....68493
264b.....68720
905.....67789

Proposed Rules:

202.....68786
205.....68788
213.....68791
222.....74529
226.....68793
230.....68799

13 CFR

121.....74833, 74842

14 CFR

11.....70132
25 .....68499, 68501, 70133
33.....74469
39 .....67018, 67020, 67021, 67024, 67025, 67027, 67585, 67588, 67789, 67792, 67794, 67796, 67798, 69596, 70136, 70428, 70429, 70431, 70432, 70434, 74161, 74163, 74164, 74166, 74167, 74169, 74171, 74172, 74173, 74175
71 .....67357, 67358, 67359, 67360, 67361, 67590, 68449, 68503, 68504, 68505, 68506, 68507, 68508, 68973, 69305, 69597, 69598, 69599, 70137, 70138, 70139, 70140, 74471, 74472, 74473, 74474, 74475, 74476
91.....70132
97.....67363, 69306
135.....69307
1260.....67364

Proposed Rules:

25.....68563
39 .....67385, 67611, 67613, 67616, 67618, 67622, 67812, 67814, 67816, 67971, 67973, 67975, 67978, 67980, 67981, 67984, 67986, 67988, 68299, 68301, 68304, 68306, 68308, 68311, 68802, 69051, 69053, 69055, 69057, 69633, 70204, 70206, 70208, 70210, 70213, 70464, 70469, 70473, 70475, 70477, 70479, 71040, 71045, 71047, 71049, 71051, 74532, 74874
71 .....68573, 68575, 68576, 70746, 71053

15 CFR

6.....69001
740.....68976
742.....67030
743.....68976
772.....68976
774.....67030, 68976
801.....69955
806.....67939

16 CFR

602.....74467
1500.....70140

Proposed Rules:

602.....74529
1500.....74878

17 CFR

211.....74436, 75056
228.....69204
229.....69204
231.....75056
240 .....69204, 74390, 75050
241.....75056
249.....69204
270.....69204, 74714
274.....69204
275.....74714
279.....74714

Proposed Rules:

143.....69634
200.....68186
201.....68186
239.....70402, 74732
240.....68186
270.....70388, 74820
274.....70402, 74732
403.....69059

18 CFR

4.....69957
5.....69978
11.....67592
35.....69599
37.....69134
161.....69134
250.....69134
284.....69134
358.....69134

19 CFR

4.....68140
10.....67338
103.....68140
113.....68140
122.....68140
123.....68140
163.....67338
178.....68140
192.....68140

20 CFR

404.....69003, 74177
416.....69003, 74177
422.....74177
718.....69930
725.....69930

Proposed Rules:

422.....69978

21 CFR

1.....69957
314.....69009
347.....68509
520.....68723
522.....68723, 70701
601.....69009
872.....67365
882.....70435

Proposed Rules:

17.....67094
872.....67097

22 CFR

89.....69600
126.....67032
303.....68695

Proposed Rules:

302.....71054

24 CFR

570.....69580
891.....67316

25 CFR

170.....67941

26 CFR

1 .....67595, 68511, 69020, 69024, 70141, 70584, 70701, 74847
301 .....67595, 70701, 74848
602 .....67595, 70141, 70701

Proposed Rules:

1 .....69061, 69062, 70214, 70482, 70747, 71235
20.....74534
301 .....70214, 70747, 74534

27 CFR

9.....67367

Proposed Rules:

7.....67388
9.....70217
25.....67388

28 CFR

2.....70709
15.....74187
28.....74855
548.....74859

Proposed Rules:

549.....74892
901.....67991

29 CFR

1626.....70150
4011.....67032
4022.....67033, 69606
4044.....67035, 69606

Proposed Rules:

1917.....68804
1918.....68804
2510.....68710

30 CFR

250.....69308
934.....67801
948.....67035, 68724

Proposed Rules:

701.....75036
732.....67776
773.....75036
774.....75036
778.....75036
843.....75036
847.....75036
931.....70749

31 CFR

1.....67943
323.....67943

Proposed Rules:

50.....67100
356.....74274

32 CFR

341.....74860
342.....74860
348.....74860
350.....74860
353.....74860
363.....74860
364.....74860
365.....74860
366.....74860
367A 74860
368.....74860
369.....74860
370.....74860
373.....74860
376.....74860
377.....74860
380.....74860
381.....74860
382.....74860
384.....74860
385.....74860
386.....74860
387.....74860
391.....74860
394.....74860
396.....74860
399.....74860
706 .....68511, 68513, 68514, 68515, 68516
806b.....68517

Proposed Rules:

312.....68577
806b.....68578

33 CFR

1.....69958
27.....74189
66.....68235
100.....67944, 68239
110.....70995
117 .....69607, 70152, 70712, 74477
165 .....67371, 67946, 68518, 69609, 69958, 70153, 74479, 74861, 74863

Proposed Rules:

110.....74536
167.....74199

34 CFR

200.....68698
668.....69312
674.....69312
682.....69312
685.....69312

36 CFR

7.....69268
242.....67595, 70712

Proposed Rules:

7.....69358

37 CFR

1.....67805, 70996
2.....74479
7.....74479
253.....67045
259.....74481

Proposed Rules:

1.....67818, 69442
2.....69442, 70482
10.....69442
11.....69442

38 CFR

17.....70714

Proposed Rules:
1 74893
2 74893
19 69062
20 69062

39 CFR

Proposed Rules:
111 69066

40 CFR

51 71009
52 ....67045, 67598, 67805, 67807, 67948, 68521, 68523, 69025, 69318, 69320, 69611, 70437, 74483, 74866
60 ....69029, 69036, 70960
61 ....67932, 69029, 69036
62 ....68738, 74868
63 ....67953, 69029, 69036, 69164, 70726, 70904, 70948, 70960, 75033
70 74871
81 69611
180 69322
271 68526
437 71014
721 70155
Proposed Rules:
30 74537
31 74537
33 74537
35 74537
40 74537
51 68805
52 ....67821, 67993, 68579, 68580, 68581, 69069, 69366, 69637, 69640, 70484
61 69069
62 68805
63 ....69069, 70752
70 74907
81 ....69640, 70108, 75033
180 68806
247 68813
260 74907
261 74907
271 68585
302 67916
355 67916
451 75068

41 CFR

105–55 68740
105–56 68750
105–57 68760
300–3 71026
301–10 69618
301–50 71026
301–52 71026
301–70 71026
301–73 71026

42 CFR

52a 69619
102 70080
403 69840
405 74792
408 69840
411 74491
412 67955
413 67955
414 67960
476 67955
484 67955
491 74792
Proposed Rules:
1001 69366

43 CFR

4 68765
3710 74196
3730 74196
3810 74196
3820 74196
3830 74196
3831 74196
3832 74196
3833 74196
3834 74196
3835 74196
3836 74196
3837 74196
3838 74196
3839 74196
3840 74196
3850 74196
Proposed Rules:
4100 68452

44 CFR

64 67051
65 ....67052, 69323, 69959
67 ....67056, 69961
Proposed Rules:
67 ....67106, 67107

45 CFR

31 70444
1185 70184
1604 67372
Proposed Rules:
2400 69980

46 CFR

401 69564
404 69564
Proposed Rules:
501 67510
535 67510

47 CFR

2 ....68241, 68531, 74322
15 68531
18 68531
20 70184
25 74322
54 ....69622, 74492
64 74504
73 ....67378, 67599, 67964, 68254, 68547, 69327, 69328, 69627, 70728, 70729, 74201, 74197
74 ....68241, 69328
76 67599
78 68241
87 74322
90 68531
95 68531
101 68241
Proposed Rules:
2 68823
15 68823
52 68831
53 68585
54 ....69641, 74538
64 68312
73 ....67389, 67390, 67624, 68833, 69648, 70753, 74201, 74202, 74542
76 67624

48 CFR

Ch. 1 ....69226, 69259
Ch. 30 67868
1 ....69227, 69258
2 ....67354, 69246
4 69248
6 69258
8 69249
9 ....67354, 69250
13 69258
22 67354
25 69258
28 67354
31 ....69246, 69251
36 69227
44 67354
52 ....67354, 69251, 69257, 69258
53 ....69227, 69248
232 ....69628, 69631
252 ....69628, 69631
904 68771
923 68771
952 68771
970 68771
Proposed Rules:
8 69262
22 74404
31 69264
52 74404
53 74404
1809 67995
1813 71055
1814 71055
1815 71055
1816 71055
1817 71055
1819 71056
1822 71056
1823 71056
1824 71056
1825 71056
1837 67995
1852 67995

49 CFR

171 67746
192 69778
199 69046
222 70586
229 70586
571 ....67068, 69046
586 67068
1152 67809
Proposed Rules:
24 70342
171 67821
173 67821
174 67821
176 67821
177 67821
192 ....67128, 67129, 69368
195 ....67129, 69368
533 ....74908, 74931
571 ....68319, 71057

50 CFR

17 70185
100 ....67595, 70712
223 69962
229 69967
300 67607
402 68254
600 ....69331, 74746
622 68784
635 ....69969, 74504, 74746
648 ....67609, 69970, 71032, 71033, 74198, 74512
679 ....67086, 67379, 67964, 68265, 69047, 69048, 69049, 69974, 70753, 71036
Proposed Rules:
216 67629
222 70219
223 ....68834, 70219
224 68834
600 ....67636, 69070, 74542
622 ....68854, 71058
648 ....69373, 74939
660 ....67132, 67638, 67640, 67998, 68834
679 ....67390, 67642, 68002, 70484, 70753
697 67636

REMINDERS

The items in this list were editorially compiled as an aid to Federal Register users. Inclusion or exclusion from this list has no legal significance.

RULES GOING INTO EFFECT DECEMBER 29, 2003

DEFENSE DEPARTMENT

Technical amendments; published 12-29-03

ENVIRONMENTAL PROTECTION AGENCY

Air quality implementation plans; approval and promulgation; various States:

California; published 10-30-03

Missouri; published 10-30-03

Tennessee; published 12-29-03

FEDERAL COMMUNICATIONS COMMISSION

Television broadcasting:

Digital cable products; commercial availability of navigation devices and compatibility between cable systems and consumer electronics equipment; published 11-28-03

HEALTH AND HUMAN SERVICES DEPARTMENT

Centers for Medicare & Medicaid Services

Medicare and Medicaid:

Religious nonmedical health care institutions and advance directives; published 11-28-03

Medicare:

Medicare+Choice plans; Medicare Part B premium reduction; published 11-28-03

HOUSING AND URBAN DEVELOPMENT DEPARTMENT

Public and Indian housing:

Native Hawaiian Housing Block Grant and Loan Guarantees for Native Hawaiian Housing Programs; published 11-28-03

INTERIOR DEPARTMENT

Hearings and appeals procedures:

Surface coal mining; special rules; published 11-28-03

JUSTICE DEPARTMENT

Prisons Bureau

Inmate control, custody, care, etc.:

Religious beliefs and practices; published 12-29-03

NATIONAL CREDIT UNION ADMINISTRATION

Freedom of Information Act; implementation; published 10-30-03

SECURITIES AND EXCHANGE COMMISSION

Financial reporting matters:

Management's discussion and analysis of financial condition and results of operations; guidance; published 12-29-03

TREASURY DEPARTMENT

Internal Revenue Service

Income taxes:

Substitute payments; information statements; published 12-29-03

TREASURY DEPARTMENT

Alcohol and Tobacco Tax and Trade Bureau

Alcohol; viticultural area designations:

Bennett Valley, Sonoma County, CA; published 10-30-03

COMMENTS DUE NEXT WEEK

AGRICULTURE DEPARTMENT

Animal and Plant Health Inspection Service

Exportation and importation of animals and animal products:

Bovine spongiform encephalopathy; minimal risk regions and importation of commodities; comments due by 1-5-04; published 11-4-03 [FR 03-27611]

COMMERCE DEPARTMENT

National Oceanic and Atmospheric Administration

Fishery conservation and management:

Alaska; fisheries of Exclusive Economic Zone—

Bering Sea and Aleutian Islands king and tanner crab and Gulf of Alaska scallop and salmon; comments due by 1-10-04; published 11-21-03 [FR 03-29173]

Gulf of Alaska groundfish; comments due by 1-5-04; published 12-5-03 [FR 03-30283]

Caribbean, Gulf, and South Atlantic fisheries—

Gulf of Mexico Fishery Management Council; meetings; comments due by 1-9-04; published 12-22-03 [FR 03-31488]

Snapper-Grouper; comments due by 1-5-04; published 11-4-03 [FR 03-27686]

Snapper-grouper; comments due by 1-9-04; published 11-25-03 [FR 03-29444]

Magnuson-Stevens Act provisions—

Domestic fisheries; exempted fishing permit applications; comments due by 1-8-04; published 12-24-03 [FR 03-31612]

West Coast and Western Pacific fisheries—

Highy migratory species; comments due by 1-5-04; published 11-6-03 [FR 03-27994]

West Coast States and Western Pacific fisheries—

Pacific Coast groundfish; comments due by 1-5-04; published 12-5-03 [FR 03-30284]

Pacific Coast groundfish; comments due by 1-6-04; published 11-7-03 [FR 03-28131]

COMMERCE DEPARTMENT

Patent and Trademark Office

Patent cases:

Patent term extension and patent term adjustment provisions related to Board of Patent Appeals and Interferences decisions; revision; comments due by 1-5-04; published 12-4-03 [FR 03-30151]

COURT SERVICES AND OFFENDER SUPERVISION AGENCY FOR THE DISTRICT OF COLUMBIA

Semi-annual agenda; Open for comments until further notice; published 12-22-03 [FR 03-25121]

ENERGY DEPARTMENT

Federal Energy Regulatory Commission

Electric rate and corporate regulation filings:

Virginia Electric & Power Co. et al.; Open for comments until further notice; published 10-1-03 [FR 03-24818]

ENVIRONMENTAL PROTECTION AGENCY

Air programs; approval and promulgation; State plans for designated facilities and pollutants:

Nevada; comments due by 1-9-04; published 12-10-03 [FR 03-30590]

Air quality implementation plans; approval and promulgation; various States:

California; comments due by 1-5-04; published 12-4-03 [FR 03-30167]

Delaware; comments due by 1-5-04; published 12-5-03 [FR 03-30041]

Maryland; comments due by 1-8-04; published 12-9-03 [FR 03-30509]

Missouri; comments due by 1-8-04; published 12-9-03 [FR 03-30039]

New Jersey; comments due by 1-8-04; published 12-9-03 [FR 03-30514]

Environmental statements; availability, etc.:

Coastal nonpoint pollution control program—

Minnesota and Texas; Open for comments until further notice; published 10-16-03 [FR 03-26087]

Hazardous waste program authorizations:

Louisiana; comments due by 1-8-04; published 12-9-03 [FR 03-30511]

Water pollution control:

Clean Water Act—

Arizona; Sewage Sludge (Biosolids) Management Program; modification application; comments due by 1-5-04; published 11-21-03 [FR 03-29177]

National Pollutant Discharge Elimination System—

Municipal wastewater treatment discharges during wet weather conditions; permit requirements; comments due by 1-9-04; published 11-7-03 [FR 03-28103]

Water supply:

National primary drinking water regulations—

Long Term 2 Enhanced Surface Water Treatment Rule; comments due by 1-9-04; published 10-8-03 [FR 03-25546]

FEDERAL COMMUNICATIONS COMMISSION

Common carrier services:

Update default compensation rate for

dial-around calls from payphones; comments due by 1-7-04; published 12-8-03 [FR 03-30309]
Digital television stations; table of assignments:
Idaho; comments due by 1-5-04; published 11-28-03 [FR 03-29626]
North Dakota; comments due by 1-5-04; published 11-26-03 [FR 03-29467]
Radio frequency devices:
Unlicensed devices and equipment approval; comments due by 1-9-04; published 12-10-03 [FR 03-30540]
Radio stations; table of assignments:
Pennsylvania; comments due by 1-5-04; published 12-2-03 [FR 03-29860]
Various States; comments due by 1-5-04; published 11-28-03 [FR 03-29628]

HEALTH AND HUMAN SERVICES DEPARTMENT
Centers for Medicare & Medicaid Services
Medicare:
Hospital outpatient prospective payment system and 2004 CY payment rates; comments due by 1-6-04; published 11-7-03 [FR 03-27791]

HEALTH AND HUMAN SERVICES DEPARTMENT
Food and Drug Administration
Reports and guidance documents; availability, etc.:
Evaluating safety of antimicrobial new animal drugs with regard to their microbiological effects on bacteria of human health concern; Open for comments until further notice; published 10-27-03 [FR 03-27113]

HOMELAND SECURITY DEPARTMENT
Coast Guard
Ports and waterways safety:
Ninth Coast Guard District; Illinois Waterway System; barges loaded with dangerous cargoes; reporting requirements; comments due by 1-5-04; published 10-6-03 [FR 03-25296]

HOMELAND SECURITY DEPARTMENT
Acquisition regulations:
Establishment; comments due by 1-5-04; published 12-4-03 [FR 03-29823]

INTERIOR DEPARTMENT
Fish and Wildlife Service
Endangered and threatened species:
Finding on petitions, etc—
Tibetan Antelope; comments due by 1-5-04; published 10-6-03 [FR 03-25207]

JUSTICE DEPARTMENT
Protection of Children from Sexual Predators Act of 1998; implementation:
Designation of agencies to receive and investigate reports of child pornography; comments due by 1-5-04; published 11-4-03 [FR 03-27467]

NATIONAL CRIME PREVENTION AND PRIVACY COMPACT COUNCIL
Fingerprint submission requirements; comments due by 1-5-04; published 12-5-03 [FR 03-29567]

RAILROAD RETIREMENT BOARD
Railroad Unemployment Insurance Act:
Applications and claims for benefits; electronic filing; comments due by 1-6-04; published 11-7-03 [FR 03-28031]

SECURITIES AND EXCHANGE COMMISSION
Investment companies:
Subadvisory contracts; exemption from shareholder approval; comments due by 1-8-04; published 10-29-03 [FR 03-27198]
Practice and procedure:
Sarbanes-Oxley Act of 2002; implementation—
Rules of practice and related provisions; amendments; comments due by 1-5-04; published 12-5-03 [FR 03-29932]
Securities:
Short sales; comments due by 1-5-04; published 11-6-03 [FR 03-27660]

SOCIAL SECURITY ADMINISTRATION
Special veterans benefits; World War II veterans; comments due by 1-5-04; published 11-5-03 [FR 03-27434]

TRANSPORTATION DEPARTMENT
Federal Aviation Administration
Airworthiness directives:
Airbus; comments due by 1-5-04; published 12-4-03 [FR 03-30191]
BAE Systems (Operations) Ltd.; comments due by 1-5-04; published 12-5-03 [FR 03-30222]
Boeing; comments due by 1-9-04; published 11-25-03 [FR 03-29342]
Bombardier; comments due by 1-5-04; published 12-5-03 [FR 03-30221]
Dassault; comments due by 1-5-04; published 12-4-03 [FR 03-30190]
Dornier; comments due by 1-5-04; published 12-5-03 [FR 03-30225]
Fokker; comments due by 1-5-04; published 12-5-03 [FR 03-30224]
Pilatus Aircraft Ltd.; comments due by 1-6-04; published 12-5-03 [FR 03-30256]
Raytheon; comments due by 1-6-04; published 11-5-03 [FR 03-27798]
Special conditions—
Boeing Model 707-300 series airplanes; comments due by 1-8-04; published 12-9-03 [FR 03-30448]
Israel Aircraft Industries Model 1124 airplanes; comments due by 1-8-04; published 12-9-03 [FR 03-30447]
Class D and E airspace; comments due by 1-8-04; published 12-9-03 [FR 03-30457]
Class E airspace; comments due by 1-5-04; published 11-19-03 [FR 03-28824]

TRANSPORTATION DEPARTMENT
Federal Motor Carrier Safety Administration
Motor carrier safety standards:
Commercial driver's licenses with hazardous materials endorsement; limitations on issuance; comments due by 1-6-04; published 11-7-03 [FR 03-28175]

TRANSPORTATION DEPARTMENT
National Highway Traffic Safety Administration
Motor vehicle safety standards:
Hydraulic and electric brake systems; comments due by 1-5-04; published 11-4-03 [FR 03-27657]

TREASURY DEPARTMENT
Internal Revenue Service
Incomes taxes:
Mortgage revenue bonds; public hearing; comments due by 1-7-04; published 11-5-03 [FR 03-27866]

TREASURY DEPARTMENT
Alcohol and Tobacco Tax and Trade Bureau
Alcohol; viticultural area designations:
Eola Hills, OR; comments due by 1-6-04; published 11-7-03 [FR 03-28062]

LIST OF PUBLIC LAWS

Note: The List of Public Laws for the first session of the 108th Congress has been completed. It will resume when bills are enacted into public law during the next session of Congress. A cumulative List of Public Laws for the first session of the 108th Congress will appear in the issue of January 30, 2004.

Last List December 24, 2003

Public Laws Electronic Notification Service (PENS)

PENS is a free electronic mail notification service of newly enacted public laws. To subscribe, go to *http://listserv.gsa.gov/archives/publaws-l.html*

Note: PENS will resume service when bills are enacted into law during the next session of Congress. This service is strictly for E-mail notification of new laws. The text of laws is not available through this service. **PENS** cannot respond to specific inquiries sent to this address.

CFR CHECKLIST

This checklist, prepared by the Office of the Federal Register, is published weekly. It is arranged in the order of CFR titles, stock numbers, prices, and revision dates.

An asterisk (*) precedes each entry that has been issued since last week and which is now available for sale at the Government Printing Office.

A checklist of current CFR volumes comprising a complete CFR set, also appears in the latest issue of the LSA (List of CFR Sections Affected), which is revised monthly.

The CFR is available free on-line through the Government Printing Office's GPO Access Service at http://www.access.gpo.gov/nara/cfr/index.html. For information about GPO Access call the GPO User Support Team at 1-888-293-6498 (toll free) or 202-512-1530.

The annual rate for subscription to all revised paper volumes is $1195.00 domestic, $298.75 additional for foreign mailing.

Mail orders to the Superintendent of Documents, Attn: New Orders, P.O. Box 371954, Pittsburgh, PA 15250–7954. All orders must be accompanied by remittance (check, money order, GPO Deposit Account, VISA, Master Card, or Discover). Charge orders may be telephoned to the GPO Order Desk, Monday through Friday, at **(202) 512–1800** from 8:00 a.m. to 4:00 p.m. eastern time, or FAX your charge orders to **(202) 512-2250**.

Title	Stock Number	Price	Revision Date
1, 2 (2 Reserved)	(869–050–00001–6)	9.00	[4] Jan. 1, 2003
3 (2002 Compilation and Parts 100 and 101)	(869–050–00002–4)	32.00	[1] Jan. 1, 2003
4	(869–050–00003–2)	9.50	Jan. 1, 2003
5 Parts:			
1–699	(869–050–00004–1)	57.00	Jan. 1, 2003
700–1199	(869–050–00005–9)	46.00	Jan. 1, 2003
1200–End, 6 (6 Reserved)	(869–050–00006–7)	58.00	Jan. 1, 2003
7 Parts:			
1–26	(869–050–00007–5)	40.00	Jan. 1, 2003
27–52	(869–050–00008–3)	47.00	Jan. 1, 2003
53–209	(869–050–00009–1)	36.00	Jan. 1, 2003
210–299	(869–050–00010–5)	59.00	Jan. 1, 2003
300–399	(869–050–00011–3)	43.00	Jan. 1, 2003
400–699	(869–050–00012–1)	39.00	Jan. 1, 2003
700–899	(869–050–00013–0)	42.00	Jan. 1, 2003
900–999	(869–050–00014–8)	57.00	Jan. 1, 2003
1000–1199	(869–050–00015–6)	23.00	Jan. 1, 2003
1200–1599	(869–050–00016–4)	58.00	Jan. 1, 2003
1600–1899	(869–050–00017–2)	61.00	Jan. 1, 2003
1900–1939	(869–050–00018–1)	29.00	[4] Jan. 1, 2003
1940–1949	(869–050–00019–9)	47.00	Jan. 1, 2003
1950–1999	(869–050–00020–2)	45.00	Jan. 1, 2003
2000–End	(869–050–00021–1)	46.00	Jan. 1, 2003
8	(869–050–00022–9)	58.00	Jan. 1, 2003
9 Parts:			
1–199	(869–050–00023–7)	58.00	Jan. 1, 2003
200–End	(869–050–00024–5)	56.00	Jan. 1, 2003
10 Parts:			
1–50	(869–050–00025–3)	58.00	Jan. 1, 2003
51–199	(869–050–00026–1)	56.00	Jan. 1, 2003
200–499	(869–050–00027–0)	44.00	Jan. 1, 2003
500–End	(869–050–00028–8)	58.00	Jan. 1, 2003
11	(869–050–00029–6)	38.00	Feb. 3, 2003
12 Parts:			
1–199	(869–050–00030–0)	30.00	Jan. 1, 2003
200–219	(869–050–00031–8)	38.00	Jan. 1, 2003
220–299	(869–050–00032–6)	58.00	Jan. 1, 2003
300–499	(869–050–00033–4)	43.00	Jan. 1, 2003
500–599	(869–050–00034–2)	38.00	Jan. 1, 2003
600–899	(869–050–00035–1)	54.00	Jan. 1, 2003
900–End	(869–050–00036–9)	47.00	Jan. 1, 2003
13	(869–050–00037–7)	47.00	Jan. 1, 2003
14 Parts:			
1–59	(869–050–00038–5)	60.00	Jan. 1, 2003
60–139	(869–050–00039–3)	58.00	Jan. 1, 2003
140–199	(869–050–00040–7)	28.00	Jan. 1, 2003
200–1199	(869–050–00041–5)	47.00	Jan. 1, 2003
1200–End	(869–050–00042–3)	43.00	Jan. 1, 2003
15 Parts:			
0–299	(869–050–00043–1)	37.00	Jan. 1, 2003
300–799	(869–050–00044–0)	57.00	Jan. 1, 2003
800–End	(869–050–00045–8)	40.00	Jan. 1, 2003
16 Parts:			
0–999	(869–050–00046–6)	47.00	Jan. 1, 2003
1000–End	(869–050–00047–4)	57.00	Jan. 1, 2003
17 Parts:			
1–199	(869–050–00049–1)	50.00	Apr. 1, 2003
200–239	(869–050–00050–4)	58.00	Apr. 1, 2003
240–End	(869–050–00051–2)	62.00	Apr. 1, 2003
18 Parts:			
1–399	(869–050–00052–1)	62.00	Apr. 1, 2003
400–End	(869–050–00053–9)	25.00	Apr. 1, 2003
19 Parts:			
1–140	(869–050–00054–7)	60.00	Apr. 1, 2003
141–199	(869–050–00055–5)	58.00	Apr. 1, 2003
200–End	(869–050–00056–3)	30.00	Apr. 1, 2003
20 Parts:			
1–399	(869–050–00057–1)	50.00	Apr. 1, 2003
400–499	(869–050–00058–0)	63.00	Apr. 1, 2003
500–End	(869–050–00059–8)	63.00	Apr. 1, 2003
21 Parts:			
1–99	(869–050–00060–1)	40.00	Apr. 1, 2003
100–169	(869–050–00061–0)	47.00	Apr. 1, 2003
170–199	(869–050–00062–8)	50.00	Apr. 1, 2003
200–299	(869–050–00063–6)	17.00	Apr. 1, 2003
300–499	(869–050–00064–4)	29.00	Apr. 1, 2003
500–599	(869–050–00065–2)	47.00	Apr. 1, 2003
600–799	(869–050–00066–1)	15.00	Apr. 1, 2003
800–1299	(869–050–00067–9)	58.00	Apr. 1, 2003
1300–End	(869–050–00068–7)	22.00	Apr. 1, 2003
22 Parts:			
1–299	(869–050–00069–5)	62.00	Apr. 1, 2003
300–End	(869–050–00070–9)	44.00	Apr. 1, 2003
23	(869–050–00071–7)	44.00	Apr. 1, 2003
24 Parts:			
0–199	(869–050–00072–5)	58.00	Apr. 1, 2003
200–499	(869–050–00073–3)	50.00	Apr. 1, 2003
500–699	(869–050–00074–1)	30.00	Apr. 1, 2003
700–1699	(869–050–00075–0)	61.00	Apr. 1, 2003
1700–End	(869–050–00076–8)	30.00	Apr. 1, 2003
25	(869–050–00077–6)	63.00	Apr. 1, 2003
26 Parts:			
§§ 1.0–1–1.60	(869–050–00078–4)	49.00	Apr. 1, 2003
§§ 1.61–1.169	(869–050–00079–2)	63.00	Apr. 1, 2003
§§ 1.170–1.300	(869–050–00080–6)	57.00	Apr. 1, 2003
§§ 1.301–1.400	(869–050–00081–4)	46.00	Apr. 1, 2003
§§ 1.401–1.440	(869–050–00082–2)	61.00	Apr. 1, 2003
§§ 1.441–1.500	(869–050–00083–1)	50.00	Apr. 1, 2003
§§ 1.501–1.640	(869–050–00084–9)	49.00	Apr. 1, 2003
§§ 1.641–1.850	(869–050–00085–7)	60.00	Apr. 1, 2003
§§ 1.851–1.907	(869–050–00086–5)	60.00	Apr. 1, 2003
§§ 1.908–1.1000	(869–050–00087–3)	60.00	Apr. 1, 2003
§§ 1.1001–1.1400	(869–050–00088–1)	61.00	Apr. 1, 2003
§§ 1.1401–1.1503–2A	(869–050–00089–0)	50.00	Apr. 1, 2003
§§ 1.1551–End	(869–050–00090–3)	50.00	Apr. 1, 2003
2–29	(869–050–00091–1)	60.00	Apr. 1, 2003
30–39	(869–050–00092–0)	41.00	Apr. 1, 2003
40–49	(869–050–00093–8)	26.00	Apr. 1, 2003
50–299	(869–050–00094–6)	41.00	Apr. 1, 2003
300–499	(869–050–00095–4)	61.00	Apr. 1, 2003
500–599	(869–050–00096–2)	12.00	[5] Apr. 1, 2003
600–End	(869–050–00097–1)	17.00	Apr. 1, 2003

Title	Stock Number	Price	Revision Date
27 Parts:			
1–199	(869–050–00098–9)	63.00	Apr. 1, 2003
200–End	(869–050–00099–7)	25.00	Apr. 1, 2003
28 Parts:			
0–42	(869–050–00100–4)	61.00	July 1, 2003
43–End	(869–050–00101–2)	58.00	July 1, 2003
29 Parts:			
0–99	(869–050–00102–1)	50.00	July 1, 2003
100–499	(869–050–00103–9)	22.00	July 1, 2003
500–899	(869–050–00104–7)	61.00	July 1, 2003
900–1899	(869–050–00105–5)	35.00	July 1, 2003
1900–1910 (§§ 1900 to 1910.999)	(869–050–00106–3)	61.00	July 1, 2003
1910 (§§ 1910.1000 to end)	(869–050–00107–1)	46.00	July 1, 2003
1911–1925	(869–050–00108–0)	30.00	July 1, 2003
1926	(869–050–00109–8)	50.00	July 1, 2003
1927–End	(869–050–00110–1)	62.00	July 1, 2003
30 Parts:			
1–199	(869–050–00111–0)	57.00	July 1, 2003
200–699	(869–050–00112–8)	50.00	July 1, 2003
700–End	(869–050–00113–6)	57.00	July 1, 2003
31 Parts:			
0–199	(869–050–00114–4)	40.00	July 1, 2003
200–End	(869–050–00115–2)	64.00	July 1, 2003
32 Parts:			
1–39, Vol. I		15.00	[2] July 1, 1984
1–39, Vol. II		19.00	[2] July 1, 1984
1–39, Vol. III		18.00	[2] July 1, 1984
1–190	(869–050–00116–1)	60.00	July 1, 2003
191–399	(869–050–00117–9)	63.00	July 1, 2003
400–629	(869–050–00118–7)	50.00	July 1, 2003
630–699	(869–050–00119–5)	37.00	[7] July 1, 2003
700–799	(869–050–00120–9)	46.00	July 1, 2003
800–End	(869–050–00121–7)	47.00	July 1, 2003
33 Parts:			
1–124	(869–050–00122–5)	55.00	July 1, 2003
125–199	(869–050–00123–3)	61.00	July 1, 2003
200–End	(869–050–00124–1)	50.00	July 1, 2003
34 Parts:			
1–299	(869–050–00125–0)	49.00	July 1, 2003
300–399	(869–050–00126–8)	43.00	[7] July 1, 2003
400–End	(869–050–00127–6)	61.00	July 1, 2003
35	(869–050–00128–4)	10.00	[6] July 1, 2003
36 Parts			
1–199	(869–050–00129–2)	37.00	July 1, 2003
200–299	(869–050–00130–6)	37.00	July 1, 2003
300–End	(869–050–00131–4)	61.00	July 1, 2003
37	(869–050–00132–2)	50.00	July 1, 2003
38 Parts:			
0–17	(869–050–00133–1)	58.00	July 1, 2003
18–End	(869–050–00134–9)	62.00	July 1, 2003
39	(869–050–00135–7)	41.00	July 1, 2003
40 Parts:			
1–49	(869–050–00136–5)	60.00	July 1, 2003
50–51	(869–050–00137–3)	44.00	July 1, 2003
52 (52.01–52.1018)	(869–050–00138–1)	58.00	July 1, 2003
52 (52.1019–End)	(869–050–00139–0)	61.00	July 1, 2003
53–59	(869–050–00140–3)	31.00	July 1, 2003
60 (60.1–End)	(869–050–00141–1)	58.00	July 1, 2003
60 (Apps)	(869–050–00142–0)	51.00	[8] July 1, 2003
61–62	(869–050–00143–8)	43.00	July 1, 2003
63 (63.1–63.599)	(869–050–00144–6)	58.00	July 1, 2003
63 (63.600–63.1199)	(869–050–00145–4)	50.00	July 1, 2003
63 (63.1200–63.1439)	(869–050–00146–2)	50.00	July 1, 2003
63 (63.1440–End)	(869–050–00147–1)	64.00	July 1, 2003
64–71	(869–050–00148–9)	29.00	July 1, 2003
72–80	(869–050–00149–7)	61.00	July 1, 2003
81–85	(869–050–00150–1)	50.00	July 1, 2003
86 (86.1–86.599–99)	(869–050–00151–9)	57.00	July 1, 2003
86 (86.600–1–End)	(869–050–00152–7)	50.00	July 1, 2003
87–99	(869–050–00153–5)	60.00	July 1, 2003
100–135	(869–050–00154–3)	43.00	July 1, 2003
136–149	(869–150–00155–1)	61.00	July 1, 2003
150–189	(869–050–00156–0)	49.00	July 1, 2003
190–259	(869–050–00157–8)	39.00	July 1, 2003
260–265	(869–050–00158–6)	50.00	July 1, 2003
266–299	(869–048–00156–5)	47.00	July 1, 2002
300–399	(869–050–00160–8)	42.00	July 1, 2003
400–424	(869–050–00161–6)	56.00	July 1, 2003
425–699	(869–050–00162–4)	61.00	July 1, 2003
700–789	(869–050–00163–2)	61.00	July 1, 2003
790–End	(869–050–00164–1)	58.00	July 1, 2003
41 Chapters:			
1, 1–1 to 1–10		13.00	[3] July 1, 1984
1, 1–11 to Appendix, 2 (2 Reserved)		13.00	[3] July 1, 1984
3–6		14.00	[3] July 1, 1984
7		6.00	[3] July 1, 1984
8		4.50	[3] July 1, 1984
9		13.00	[3] July 1, 1984
10–17		9.50	[3] July 1, 1984
18, Vol. I, Parts 1–5		13.00	[3] July 1, 1984
18, Vol. II, Parts 6–19		13.00	[3] July 1, 1984
18, Vol. III, Parts 20–52		13.00	[3] July 1, 1984
19–100		13.00	[3] July 1, 1984
1–100	(869–048–00162–0)	23.00	July 1, 2002
101	(869–050–00166–7)	24.00	July 1, 2003
102–200	(869–050–00167–5)	50.00	July 1, 2003
201–End	(869–050–00168–3)	22.00	July 1, 2003
42 Parts:			
1–399	(869–048–00166–2)	56.00	Oct. 1, 2002
400–429	(869–048–00167–1)	59.00	Oct. 1, 2002
430–End	(869–050–00171–3)	64.00	Oct. 1, 2003
43 Parts:			
1–999	(869–050–00172–1)	55.00	Oct. 1, 2003
1000–end	(869–048–00170–1)	59.00	Oct. 1, 2002
44	(869–050–00174–8)	50.00	Oct. 1, 2003
45 Parts:			
1–199	(869–050–00175–6)	60.00	Oct. 1, 2003
200–499	(869–050–00176–4)	33.00	[9] Oct. 1, 2003
500–1199	(869–050–00177–2)	50.00	Oct. 1, 2003
1200–End	(869–050–00178–1)	60.00	Oct. 1, 2003
46 Parts:			
1–40	(869–050–00179–9)	46.00	Oct. 1, 2003
41–69	(869–048–00177–8)	37.00	Oct. 1, 2002
70–89	(869–050–00181–1)	14.00	Oct. 1, 2003
90–139	(869–050–00182–9)	44.00	Oct. 1, 2003
140–155	(869–050–00183–7)	25.00	[9] Oct. 1, 2003
156–165	(869–050–00184–5)	34.00	[9] Oct. 1, 2003
166–199	(869–048–00182–4)	44.00	Oct. 1, 2002
200–499	(869–050–00186–1)	39.00	Oct. 1, 2003
500–End	(869–050–00187–0)	25.00	Oct. 1, 2003
47 Parts:			
0–19	(869–048–00185–9)	57.00	Oct. 1, 2002
20–39	(869–048–00186–7)	45.00	Oct. 1, 2002
40–69	(869–048–00187–5)	36.00	Oct. 1, 2002
70–79	(869–048–00188–3)	58.00	Oct. 1, 2002
80–End	(869–048–00189–1)	57.00	Oct. 1, 2002
48 Chapters:			
1 (Parts 1–51)	(869–050–00193–4)	63.00	Oct. 1, 2003
1 (Parts 52–99)	(869–048–00191–3)	47.00	Oct. 1, 2002
2 (Parts 201–299)	(869–048–00192–1)	53.00	Oct. 1, 2002
3–6	(869–050–00196–9)	33.00	Oct. 1, 2003
7–14	(869–048–00194–8)	47.00	Oct. 1, 2002
15–28	(869–048–00195–6)	55.00	Oct. 1, 2002
29–End	(869–050–00199–3)	38.00	[9] Oct. 1, 2003
49 Parts:			
1–99	(869–048–00197–2)	56.00	Oct. 1, 2002
100–185	(869–048–00198–1)	60.00	Oct. 1, 2002
186–199	(869–050–00202–7)	20.00	Oct. 1, 2003

Title	Stock Number	Price	Revision Date
200–399	(869–048–00200–6)	61.00	Oct. 1, 2002
400–999	(869–048–00201–4)	61.00	Oct. 1, 2002
600–999	(869–050–00205–1)	22.00	Oct. 1, 2003
1000–1199	(869–048–00202–2)	25.00	Oct. 1, 2002
1200–End	(869–048–00207–8)	33.00	Oct. 1, 2003
50 Parts:			
1–16	(869–050–00208–6)	11.00	Oct. 1, 2003
18–199	(869–050–00212–4)	42.00	Oct. 1, 2003
200–599	(869–048–00206–5)	38.00	Oct. 1, 2002
600–End	(869–048–00207–3)	58.00	Oct. 1, 2002
CFR Index and Findings Aids	(869–050–00048–2)	59.00	Jan. 1, 2003
Complete 2003 CFR set		1,195.00	2003
Microfiche CFR Edition:			
Subscription (mailed as issued)		298.00	2003
Individual copies		2.00	2003
Complete set (one-time mailing)		298.00	2002
Complete set (one-time mailing)		290.00	2001

[1] Because Title 3 is an annual compilation, this volume and all previous volumes should be retained as a permanent reference source.

[2] The July 1, 1985 edition of 32 CFR Parts 1–189 contains a note only for Parts 1–39 inclusive. For the full text of the Defense Acquisition Regulations in Parts 1–39, consult the three CFR volumes issued as of July 1, 1984, containing those parts.

[3] The July 1, 1985 edition of 41 CFR Chapters 1–100 contains a note only for Chapters 1 to 49 inclusive. For the full text of procurement regulations in Chapters 1 to 49, consult the eleven CFR volumes issued as of July 1, 1984 containing those chapters.

[4] No amendments to this volume were promulgated during the period January 1, 2002, through January 1, 2003. The CFR volume issued as of January 1, 2002 should be retained.

[5] No amendments to this volume were promulgated during the period April 1, 2000, through April 1, 2003. The CFR volume issued as of April 1, 2000 should be retained.

[6] No amendments to this volume were promulgated during the period July 1, 2000, through July 1, 2003. The CFR volume issued as of July 1, 2000 should be retained.

[7] No amendments to this volume were promulgated during the period July 1, 2002, through July 1, 2003. The CFR volume issued as of July 1, 2002 should be retained.

[8] No amendments to this volume were promulgated during the period July 1, 2001, through July 1, 2003. The CFR volume issued as of July 1, 2001 should be retained.

[9] No amendments to this volume were promulgated during the period October 1, 2001, through October 1, 2003. The CFR volume issued as of October 1, 2001 should be retained.