Federal Register

Wednesday,
July 13, 2005

# Part II

# Environmental Protection Agency

## 40 CFR Parts 85, 86, et al.

## Test Procedures for Testing Highway and Nonroad Engines and Omnibus Technical Amendments; Final Rule

**ENVIRONMENTAL PROTECTION AGENCY**

**40 CFR Parts 85, 86, 89, 90, 91, 92, 94, 1039, 1048, 1051, 1065, and 1068**

**[AMS–FRL–7922–5]**

**RIN 2060–AM35**

## Test Procedures for Testing Highway and Nonroad Engines and Omnibus Technical Amendments

**AGENCY:** Environmental Protection Agency (EPA).

**ACTION:** Final Rule.

**SUMMARY:** This regulation revises and harmonizes test procedures from the various EPA programs for controlling engine emissions. It does not change emission standards, nor is it intended to change the emission reductions expected from these EPA programs. Rather, it amends the regulations that describe laboratory specifications for equipment and test fuels, instructions for preparing engines and running tests, calculations for determining final emission levels from measured values, and instructions for running emission tests using portable measurement devices outside the laboratory. These updated testing regulations currently apply to land-based nonroad diesel engines, land-based nonroad spark-ignition engines over 19 kilowatts, and recreational vehicles. The revisions in this final rule will update the regulations to deal more effectively with the more stringent standards recently promulgated by EPA and will also clarify and better define certain elements of the required test procedures. In particular, the amendments better specify the procedures applicable to field testing under the regulations.

This action also applies the updated testing regulations to highway heavy-duty diesel engine regulations. This action is appropriate because EPA has historically drafted a full set of testing specifications for each vehicle or engine category subject to emission standards as each program was developed over the past three decades. This patchwork approach has led to some variation in test parameters across programs, which we hope to address by adopting a common set of test requirements. The primary goal of this effort is to create unified testing requirements for all engines, which when implemented will streamline laboratory efforts for EPA and industry.

This action will also include other technical changes intended to clarify and better define requirements for several different EPA engine programs. These changes are relatively minor and are technical in scope.

**DATES:** This final rule is effective September 12, 2005.

The incorporation by reference of certain publications listed in this regulation is approved by the Director of the Federal Register as of September 12, 2005.

**ADDRESSES:** EPA has established a docket for this action under Docket ID No. OAR–2004–0017. All documents in the docket are listed in the EDOCKET index at *http://www.epa.gov/edocket.* Although listed in the index, some information is not publicly available, *i.e.*, CBI or other information whose disclosure is restricted by statute. Certain other material, such as copyrighted material, is not placed on the Internet and will be publicly available only in hard copy form. Publicly available docket materials are available either electronically in EDOCKET or in hard copy at the Air Docket in the EPA Docket Center, EPA/DC, EPA West, Room B102, 1301 Constitution Ave., NW., Washington, DC. The Public Reading Room is open from 8:30 a.m. to 4:30 p.m., Monday through Friday, excluding legal holidays. The telephone number for the Public Reading Room is (202) 566–1744, and the telephone number for the Air Docket is (202) 566–1742.

**FOR FURTHER INFORMATION CONTACT:** Alan Stout, U.S. EPA, Voice-mail (734) 214–4636; E-mail: *stout.alan@epa.gov.*

**SUPPLEMENTARY INFORMATION:**

### A. Regulated Entities

This action affects companies that manufacture or sell engines. Regulated categories and entities include:

| Category | NAICS codes [a] | Examples of potentially regulated entities |
|---|---|---|
| Industry | 333618 ... | Manufacturers of new engines. |

[a] North American Industry Classification System (NAICS)

This list is not intended to be exhaustive, but rather provides a guide regarding entities likely to be regulated by this action. To determine whether particular activities may be regulated by this action, you should carefully examine the regulations. You may direct questions regarding the applicability of this action to the person listed in **FOR FURTHER INFORMATION CONTACT.**

### B. How Can I Get Copies of This Document and Other Related Information?

1. Docket. EPA has established an official public docket for this action under Docket ID No. OAR–2004–0017. The official public docket consists of the documents specifically referenced in this action, any public comments received, and other information related to this action. Although a part of the official docket, the public docket does not include Confidential Business Information (CBI) or other information whose disclosure is restricted by statute. Documents in the official public docket are listed in the index list in EPA's electronic public docket and comment system, EDOCKET. Documents may be available either electronically or in hard copy. Electronic documents may be viewed through EDOCKET. Hard copy documents may be viewed at the EPA Docket Center, (EPA/DC) EPA West, Room B102, 1301 Constitution Ave., NW., Washington, DC. Docket in The EPA Docket Center Public Reading Room is open from 8:30 a.m. to 4:30 p.m., Monday through Friday, excluding legal holidays. The telephone number for the Public Reading Room is (202) 566–1744.

This rule relies in part on information related to our November 2002 final rule, which can be found in Public Docket A–2000–01. This docket is incorporated by reference into the docket for this action, OAR–2004–0017.

2. Electronic Access. You may access this **Federal Register** document electronically through the EPA Internet under the ''**Federal Register**'' listings at *http://www.epa.gov/fedrgstr/* Or you can go to the federal-wide eRulemaking site at *www.regulations.gov.*

An electronic version of the public docket is available through EDOCKET. You may use EDOCKET at *http://www.epa.gov/edocket/* to view public comments, access the index listing of the contents of the official public docket, and to access those documents in the public docket that are available electronically. Once in the system, select ''search,'' then key in the appropriate docket identification number.

**Table of Contents**

I. Modified Test Procedures for Highway and Nonroad Engines
  A. Incorporation of Nonroad Test Procedures for Heavy Duty Highway Engines
  B. Revisions to Part 1065
II. Technical Amendments
  A. Standard-Setting Changes that Apply to Multiple Categories

B. Nonroad general compliance provisions (40 CFR part 1068)
C. Land-based nonroad diesel engines (40 CFR parts 89 and 1039)
D. Marine diesel engines (40 CFR part 94)
E. Small nonroad spark-ignition engines (40 CFR part 90)
F. Marine spark-ignition engines (40 CFR part 91)
G. Large nonroad spark-ignition engines (40 CFR part 1048)
H. Recreational vehicles (40 CFR part 1051)
I. Locomotives (40 CFR part 92)
J. Highway engines and vehicles (40 CFR part 86)
III. Public Participation
IV. Statutory and Executive Order Reviews
V. Statutory Provisions and Legal Authority

## I. Modified Test Procedures for Highway and Nonroad Engines

### *A. Incorporation of Nonroad Test Procedures for Heavy Duty Highway Engines*

As part of our initiative to update the content, organization and writing style of our regulations, we are revising our test procedures.[1] We have grouped all of our engine dynamometer and field testing test procedures into one part entitled, ''Part 1065: Test Procedures.'' For each engine or vehicle sector for which we have recently promulgated standards (such as land-based nonroad diesel engines or recreational vehicles), we identified an individual part as the standard-setting part for that sector. These standard-setting parts then refer to one common set of test procedures in part 1065. We intend in this rule to continue this process of having all our engine programs refer to a common set of procedures by applying part 1065 to all heavy-duty highway engines.

In the past, each engine or vehicle sector had its own set of testing procedures. There are many similarities in test procedures across the various sectors. However, as we introduced new regulations for individual sectors, the more recent regulations featured test procedure updates and improvements that the other sectors did not have. As this process continued, we recognized that a single set of test procedures would allow for improvements to occur simultaneously across engine and vehicle sectors. A single set of test procedures is easier to understand than trying to understand many different sets of procedures, and it is easier to move toward international test procedure harmonization if we only have one set of test procedures. We note that procedures that are particular for different types of engines or vehicles, for example, test schedules designed to reflect the conditions expected in use for particular types of vehicles or engines, will remain separate and will be reflected in the standard-setting parts of the regulations.

In addition to reorganizing and rewriting the test procedures for improved clarity, we are making a variety of changes to improve the content of the testing specifications, including the following:

- Writing specifications and calculations in international units
- Adding procedures by which manufacturers can demonstrate that alternate test procedures are equivalent to specified procedures.
- Including specifications for new measurement technology that has been shown to be equivalent or more accurate than existing technology; procedures that improve test repeatability, calculations that simplify emissions determination; new procedures for field testing engines, and a more comprehensive set of definitions, references, and symbols.
- Defining calibration and accuracy specifications that are scaled to the applicable standard, which allows us to adopt a single specification that applies to a wide range of engine sizes and applications.

Some emission-control programs already rely on the test procedures in part 1065. These programs regulate land-based nonroad diesel engines, recreational vehicles, and nonroad spark-ignition engines over 19 kW.

We are adopting the lab-testing and field-testing specifications in part 1065 for all heavy-duty highway engines, as described in Section II.J. These procedures replace those currently published in subpart N in 40 CFR part 86. We are making a gradual transition from the part 86 procedures. For several years, manufacturers will be able to optionally use the part 1065 procedures. By the 2010 model year, part 1065 procedures will be required for any new testing. For all testing completed for 2009 and earlier model years, manufacturers may continue to rely on carryover test data based on part 86 procedures to certify engine families in later years. In addition, other subparts in part 86, as well as regulations for many different nonroad engines refer to the test procedures in part 86. We are including updated references for all these other programs to refer instead to the appropriate cite in part 1065.

Part 1065 is also advantageous for in-use testing because it specifies the same procedures for all common parts of field testing and laboratory testing. It also contains new provisions that help ensure that engines are tested in a laboratory in a way that is consistent with how they operate in use. These new provisions will ensure that engine dynamometer lab testing and field testing are conducted in a consistent way.

In the future, we may apply the test procedures specified in part 1065 to other types of engines, so we encourage companies involved in producing or testing other engines to stay informed of developments related to these test procedures. For example, we expect to propose in the near future new regulations for locomotives, marine engines, and several types of nonroad SI engines. We are likely to consider some changes to part 1065 in each of these rulemakings.

### *B. Revisions to Part 1065*

Part 1065 was originally adopted on November 8, 2002 (67 FR 68242), and was initially applicable to standards regulating large nonroad spark-ignition engines and recreational vehicles under 40 CFR parts 1048 and 1051. The recent rulemaking adopting emission standards for nonroad diesel engines has also made part 1065 optional for Tier 2 and Tier 3 standards and required for Tier 4 standards. The test procedures initially adopted in part 1065 were sufficient to conduct testing, but in this final rule we have reorganized these procedures and added content to make various improvements. In particular, we have reorganized part 1065 by subparts as shown below:

Subpart A: general provisions; global information on applicability, alternate procedures, units of measure, etc.
Subpart B: equipment specifications; required hardware for testing
Subpart C: measurement instruments
Subpart D: calibration and verifications; for measurement systems
Subpart E: engine selection, preparation, and maintenance
Subpart F: test protocols; step-by-step sequences for laboratory testing and test validation
Subpart G: calculations and required information
Subpart H: fuels, fluids, and analytical gases
Subpart I: oxygenated fuels; special test procedures
Subpart J: field testing and portable emissions measurement systems
Subpart K: definitions, references, and symbols

The regulations now prescribe scaled specifications for test equipment and measurement instruments by parameters such as engine power, engine speed and the emission standards to which an engine must comply. That way this single set of specifications will cover the

[1] For an overview of our new regulatory organization, refer to our fact sheet entitled, ''Plain-Language Format of Emission Regulations for Nonroad Engines,'' EPA420–F–02–046, September 2002, *http://www.epa.gov/otaq/largesi.htm.*

full range of engine sizes and our full range of emission standards. Manufacturers will be able to use these specifications to determine what range of engines and emission standards may be tested using a given laboratory or field testing system.

The new content for part 1065 is mostly a combination of content from our most recent updates to other test procedures and from test procedures specified by the International Organization for Standardization (ISO). In some cases, however, there is new content that never existed in previous regulations. This new content addresses very recent issues such as measuring very low concentrations of emissions, using new measurement technology, using portable emissions measurement systems, and performing field testing. A full description of the changes is in the Technical Support Document that accompanies this final rule (this document is available in the docket for this rulemaking).

The new content also reflects a shift in our approach for specifying measurement performance. In the past we specified numerous calibration accuracies for individual measurement instruments, and we specified some verifications for individual components, such as $NO_2$ to NO converters. We have shifted our focus away from individual instruments and toward the overall performance of complete measurement systems. We did this for several reasons. First, some of what we specified in the past precluded the implementation of new measurement technologies. These new technologies, sometimes called ''smart analyzers'', combine signals from multiple instruments to compensate for interferences that were previously tolerable at higher emissions levels. These analyzers are useful for detecting low concentrations of emissions. They are also useful for detecting emissions from raw exhaust, which can contain high concentrations of interferences, such as water vapor. This is particularly important for field testing, which will most likely rely upon raw exhaust measurements. Second, this new ''systems approach'' challenges complete measurement systems with a series of periodic verifications, which we feel will provide a more robust assurance that a measurement system as a whole is operating properly. Third, the systems approach provides a direct pathway to demonstrate that a field test system performs similarly to a laboratory system. This is explained in more detail in item 10 below. Finally, we feel that our systems approach will lead to a more efficient way of assuring measurement performance in the laboratory and in the field. We believe that this efficiency will stem from less frequent individual instrument calibrations, and higher confidence that a complete measurement system is operating properly.

We have organized the new content relating to measurement systems performance into subparts C and D. We specify measurement instruments in subpart C and calibrations and periodic system verifications in subpart D. These two subparts apply to both laboratory and field testing. We have organized content specific to running a laboratory emissions test in subpart F, and we separated content specific to field testing in subpart J.

In subpart C we specify the types of acceptable instruments, but we only recommend individual instrument performance. We provide these recommendations as guidance for procuring new instruments. We feel that the periodic verifications that we require in subpart D will sufficiently evaluate the individual instruments as part of their respective overall measurement systems. In subpart F we specify performance validations that must be conducted as part of every laboratory test. In subpart J we specify similar performance validations for field testing that must be conducted as part of every field test. We feel that the periodic verifications in subpart D and the validations for every test that we prescribed in subparts F and J ensure that complete measurement systems are operating properly.

In subpart J we also specify an additional overall verification of portable emissions measurement systems (PEMS). This verification is a comprehensive comparison of a PEMS versus a laboratory system, and it may take several days of laboratory time to set up, run, and evaluate. However, we only require that this particular verification must be performed at least once for a given make, model, and configuration of a field test system.

Below is a brief description of the content of each subpart, highlighting some of the new content. We also highlight the more significant changes from the regulatory language that was proposed in our responses to public comments. See the TSD for a more complete listing of the changes and comments to our proposed part 1065.

1. Subpart A: General Provisions

In Subpart A we identify the applicability of part 1065 and describe how procedures other than those in part 1065 may be used to comply with a standard-setting part. In § 1065.10(c)(1), we specify that testing must be conducted in a way that represents in-use engine operation, such that in the rare case where provisions in part 1065 result in unrepresentative testing, other procedures would be used. We have revised the proposed regulatory language for this requirement to clarify the manufacturers' requirements and the process that we would use to make changes to the test procedures in these cases.

Other information in this subpart includes a description of the conventions we use regarding units and certain measurements and we discuss recordkeeping. We also provide an overview of how emissions and other information are used to determine final emission results. The regulations in § 1065.15 include a figure illustrating the different ways we allow brake-specific emissions to be calculated.

In this same subpart, we describe how continuous and batch sampling may be used to determine total emissions. We also describe the two ways of determining total work that we approve. Note that the figure indicates our default procedures and those procedures that require additional approval before we will allow them.

2. Subpart B: Equipment Specifications

Subpart B first describes engine and dynamometer related systems. Many of these specifications are scaled to an engine's size, speed, torque, exhaust flow rate, etc. We specify the use of in-use engine subsystems such as air intake systems wherever possible in order to best represent in-use operation when an engine is tested in a laboratory.

Subpart B also describes sampling dilution systems. These include specifications for the allowable components, materials, pressures, and temperatures. We describe how to sample crankcase emissions. We also now allow limited use of partial-flow dilution for PM sampling. Subpart B also specifies environmental conditions for PM filter stabilization and weighing. Although these provisions mostly come from our recent update to part 86, subpart N, we also describe some new aspects in detail.

The regulations in § 1065.101 include a diagram illustrating all the available equipment for measuring emissions.

3. Subpart C: Measurement Instruments

Subpart C specifies the requirements for the measurement instruments used for testing. In subpart C we recommend accuracy, repeatability, noise, and response time specifications for individual measurement instruments, but note that we require that overall

measurement systems meet the calibrations and verifications Subpart D.

In some cases we allow new instrument types to be used where we previously did not allow them. For example, we now allow the use of a nonmethane cutter for NMHC measurement, a nondispersive ultraviolet analyzers for $NO_X$ measurement, zirconia sensors for $O_2$ measurement, various raw-exhaust flow meters for laboratory and field testing measurement, and an ultrasonic flow meter for CVS systems. We had proposed to also allow zirconia sensors for $NO_X$ measurement, but we are not finalizing that option at this time because of manufacturer concerns about drift and sensor response to $NO_2$ and $NH_3$.

4. Subpart D: Calibrations and Verifications

Subpart D describes what we mean when we specify accuracy, repeatability and other parameters in subpart C. We are adopting calibrations and verifications that scale with engine size and with the emission standards to which an engine is certified. We are replacing some of what we have called ''calibrations'' in the past with a series of verifications, such as a linearity verification, which essentially verifies the calibration of an instrument without specifying how the instrument must be initially calibrated. Because new instruments have built-in routines that linearize signals and compensate for various interferences, our existing calibration specifications sometimes conflicted with an instrument manufacturer's instructions. In addition, there are new verifications in subpart D to ensure that the new instruments we specify in subpart C are used correctly. The most significant changes in this subpart from the proposal are that we split the language for continuous gas analyzer verification into two sections (§§ 1065.308 and 1065.309), we provide more detailed descriptions for the FID $O_2$ interference verifications (§ 1065.362) and NMHC cutter setups (§ 1065.365), and we added § 1065.395 for inertial PM balance verification.

5. Subpart E: Engine Selection, Preparation, and Maintenance

Subpart E describes how to select, prepare, and maintain a test engine. We updated these provisions to include both gasoline and diesel engines. This subpart is relatively short, and we did not make many changes to its proposed content.

6. Subpart F Test Protocols

Subpart F describes the step-by-step protocols for engine mapping, test cycle generation, test cycle validation, pre-test preconditioning, engine starting, emission sampling, and post-test validations. We proposed an improved way to map and generate cycles for constant-speed engines that would better represent in-use engine operation. We have modified this language slightly to reflect the different ways in which constant-speed test cycles can be specified. We are adopting a more streamlined set of test cycle and validation criteria. We allow modest corrections for drift of emission analyzer signals within a certain range. We are also adopting a recommended procedure for weighing PM samples. We are not finalizing our proposed procedure to correct for instrument noise because after receiving many comments, we now acknowledge that the procedure is not robust and applicable to all emissions.

7. Subpart G Calculations and Required Information

Subpart G includes all the calculations required in part 1065. We are adopting definitions of statistical quantities such as mean, standard deviation, slope, intercept, t-test, F-test, etc. By defining these quantities mathematically we intend to resolve any potential mis-communication when we discuss these quantities in other subparts. We have written all calculations for calibrations and emission calculations in international units to comply with 15 CFR part 1170, which removes the voluntary aspect of the conversion to international units for federal agencies. Furthermore, Executive Order 12770 (56 FR 35801, July 29, 1991) reinforces this policy by providing Presidential authority and direction for the use of the metric system of measurement by Federal agencies and departments. For our standards that are not completely in international units (*i.e.,* grams/horsepower-hour, grams/mile), we specify in part 1065 the correct use of internationally recognized conversion factors.

We also specify emission calculations based on molar quantities for flow rates, instead of volume or mass. This change eliminates the frequent confusion caused by using different reference points for standard pressure and standard temperature. Instead of declaring standard densities at standard pressure and standard temperature to convert volumetric concentration measurements to mass-based units, we declare molar masses for individual elements and compounds. Since these values are independent of all other parameters, they are known to be universally constant.

We have added some detail to the calculations relative to the proposed calculations to make them clearer. We also made changes in response to comments from manufacturers.

8. Subpart H Fuels, Fluids, and Analytical Gases

Subpart H specifies test fuels, lubricating oils and coolants, and analytical gases for testing. We are eliminating the Cetane Index specification for all diesel fuels, because the existing specification for Cetane Number sufficiently determines the cetane levels of diesel test fuels. We are not identifying any detailed specification for service accumulation fuel. Instead, we specify that service accumulation fuel may be a test fuel or a commercially available in-use fuel. This helps ensure that testing is representative of in-use engine operation. We are adding a list of ASTM specifications for in-use fuels as examples of appropriate service accumulation fuels. Compared to the proposed regulatory language, we have clarified that § 1065.10(c)(1) does not require test fuels to be more representative than the specified test fuels. We have added an allowance to use similar test fuels that do not meet all of the specifications, provided they do not compromise the manufacturer's ability to demonstrate compliance. We also now allow the use of ASTM test methods specified in 40 CFR part 80 in lieu of those specified in part 1065. We did this because we more frequently review and update the ASTM methods in 40 CFR part 80 versus those in part 1065.

We proposed purity specifications for analytical gases that scale with the standards that an engine must meet. In the final regulations, we have clarified the requirement to use good engineering judgment to maintain the stability of these gases, and have tightened the purity specification for FID fuel in response to comment.

9. Subpart I Oxygenated Fuels

Subpart I describes special procedures for measuring certain hydrocarbons whenever oxygenated fuels are used. We updated the calculations for these procedures in Subpart G. We have made some revisions to the proposed text to make it consistent the original content of the comparable provisions in 40 CFR part 86. We have also added an allowance to use the California NMOG

test procedures to measure alcohols and carbonyls.

10. Subpart J Field Testing and Portable Emissions Measurement Systems

We are adopting a wide range of changes to subpart J Field Testing. Portable Emissions Measurement Systems (PEMS) must generally meet the same specifications and verifications that laboratory instruments must meet, according to subparts B, C, and D. However, allow some deviations from laboratory specifications. In addition to meeting many of the laboratory system requirements, a PEMS must meet an overall verification relative to a laboratory measurements. This verification involves repeating a duty cycle several times. The duty cycle itself must have several individual field-test intervals (*e.g.,* NTE events) against which a PEMS is compared to the laboratory system. This is a comprehensive verification of a PEMS. We are also adopting a procedure for preparing and conducting a field test, and we are adopting drift corrections for emission analyzers. Given the evolving state of PEMS technology, the field-testing procedures provide for a number of known measurement techniques. We have added provisions and conditions for the use of PEMS in an engine dynamometer laboratory to conduct laboratory testing.

11. Subpart K Definitions, References, and Symbols

In subpart K we are adopting new and revised definitions of terms frequently used in part 1065. For example we have revised our definitions of ''brake power'', ''constant-speed engine'', and ''aftertreatment'' to provide more clarity, and we have added new definitions for things such as ''300 series stainless steel'', ''barometric pressure'', and ''operator demand''. There are new definitions such as ''duty cycle'' and ''test interval'' to distinguish the difference between a single interval over which brake-specific emissions are calculated and the complete cycle over which emissions are evaluated in a laboratory. We also present a thorough and consistent set of symbols, abbreviations, and acronyms.

## II. Technical Amendments

### *A. Standard-Setting Changes That Apply to Multiple Categories*

1. Definitions

We are revising several definitions that apply over more than one part of our regulations. These changes are designed to harmonize our regulations.

We are changing the definition of Marine engine and Marine vessel to harmonize our approach to amphibious vehicles and clarify other issues. We have treated amphibious vehicles differently whether they had a diesel engine or a spark-ignition engine. We are harmonizing our treatment of amphibious vehicles by consistently treating these as land-based products. We are also adding a provision defining amphibious vehicles are those that are designed primarily for operation on land to clarify that we don't consider hovercraft to be amphibious vehicles. This is consistent with our intent and our analyses in the rulemaking to initially set standards for these products. See the Technical Support Document for additional information related to these definitions. In particular, note that we describe our interpretation of what it means for an engine to be ''installed in a marine vessel.'' Manufacturers have raised several questions related to this issue, especially as it relates to portable engines installed on barges.

2. Penalties

The Clean Air Act specifies maximum penalty amounts corresponding to each prohibited Act. These maximum penalty amounts are periodically adjusted for inflation, based on the provisions of the Debt Collection Improvement Act. These maximum penalties have been updated under 40 CFR part 19. The new maximum penalties are $32,500 for introducing noncompliant engines into commerce and for manufacturers guilty of tampering, and $2,750 for non-manufacturers guilty of tampering. In addition, the maximum penalty we can recover using administrative procedures is $270,000. We are extending these revised penalties into each of our emission-control programs.

3. Deterioration Factors for $HC+NO_X$ Standards

Manufacturers requested that we allow them to calculate a single deterioration factor for engines that are subject to combined $HC+NO_X$ emission standards, rather than calculating separate deterioration factors for each pollutant. We proposed for some engines to clarify that separate deterioration factors were appropriate. In the case of spark-ignition engines, it is especially true that changing carburetor calibrations and other things affecting air-fuel ratios have a direct inverse relationship on HC and $NO_X$ emissions. Where deterioration factors are based on service accumulation through the entire useful life, we believe it is therefore appropriate to base deterioration factors for spark-ignition engines subject to $HC+NO_X$ emission standards on a single deterioration factor for the combined pollutants. However, if deteriortion factors are based on service accumulation over less than the full useful life, we want to avoid the situation where a manufacturer is extrapolating values that presume further improvement in the emission levels of any particular pollutant. For such testing, we therefore specify that separate deterioration factors for each pollutant are appropriate. We are making a related, additional change to clarify that manufacturers must include both low-hour and deteriorated emission measurements for each pollutant, even if the regulations allow for a single deterioration factor for $HC+NO_X$ emissions together. Compression-ignition engines have different wear mechanisms and generally have much longer useful-life values, so it is not clear that this approach to allowing combined deterioration factor is appropriate for these engines. We may further consider applying this change to compression-ignition engines in a future rulemaking.

4. Emission Warranty Related to Extended Service Contracts

Manufacturers objected to our proposal to apply emission-related warranty requirements to components for which a consumer pays for an extended performance warranty. We agree with the point raised by the manufacturers that these service contracts do not necessarily imply that the part should last longer, but rather that the manufacturer (or a third-party provider) has made a calculation regarding the financial and customer service benefits of offering contracts that provide free or reduced-cost coverage for certain components after collecting an up-front charge. We will remove this provision across all engine categories.

5. Exemption for Staged Assembly

Some manufacturers pointed out that they were facing difficulties with production processes that required them to ship nearly completed engines to one or more different facilities for final assembly. Without an exemption, this would violate the applicable prohibited acts, since it involves the introduction into commerce an engine that is not in its certified configuration. To address this concern, we have adopted an exemption that allows manufacturers to assemble engines at multiple facilities, as long as they maintain control of the engines at all times before final assembly. Manufacturers would need to

request approval for such an arrangement. EPA approval may be conditioned on the manufacturer taking reasonable additional steps to ensure that engines end up in their certified configuration. This exemption applies to all the engine categories that are subject to 40 CFR part 1068 (as described in the next section), and to locomotives and marine diesel engines.

*B. Nonroad General Compliance Provisions (40 CFR Part 1068)*

In addition to the changing test procedures described above, we are making various changes to the general compliance provisions in 40 CFR part 1068, which currently applies to land-based nonroad diesel engines, recreational vehicles, and nonroad spark-ignition engines over 19 kW. We encourage manufacturers of other engines to take note of these changes, since we intend eventually to apply the provisions of part 1068 to all engines subject to EPA emission standards.

There was extensive comment related to the existing provisions in § 1068.260 related to the exemption that allows engine manufacturers to arrange for shipment of aftertreatment devices separately from engines that are intended to rely on aftertreatment. Commenters suggested that we relax some of the provisions that were intended to prevent noncompliance. We continue to believe the provisions adopted in § 1068.260 are appropriate for nonroad engines. The more extensive oversight and control mechanisms are important to ensuring that engines are assembled correctly, since there are so many possible equipment manufacturers and so many different business relationships among companies. Given that we are requiring engine manufacturers to include the cost of aftertreatment components in the price of the engine, we believe it is implicitly clear that the engine manufacturer is responsible for shipping costs, so we have removed the proposal to restate that in the regulations. We are making three other adjustments to the proposal. First, we are removing the requirement for engine manufacturers to arrange for direct shipment of aftertreatment components from the supplier to the equipment manufacturer, since a third party may appropriately be involved to produce system assemblies for integration into equipment. Second, we are adding a paragraph to clarify that integrated manufacturers can meet their auditing requirements by maintaining a database for matching up engines with the appropriate aftertreatment components. Third, we are adopting the staged-assembly exemption, as described above, which would streamline the production process for integrated engine and equipment manufacturers and address a wide range of production scenarios in addition to separate shipment of aftertreatment components.

The changes to part 1068 include several other minor adjustments and corrections. These changes are described in the Technical Support Document.

*C. Land-Based Nonroad Diesel Engines (40 CFR Parts 89 and 1039)*

We recently adopted a new tier of emission standards for nonroad diesel engines, codifying these standards in 40 CFR part 1039. This rulemaking led us to make several regulatory changes to the existing tiers of standards for these engines in 40 CFR part 89. In cases where we discovered the need for changes after publishing the proposed rule, but we did not make those changes to part 89 in the final rule out of concern that the public had not had an opportunity for comment. Similarly, we are adopting some adjustments to part 1039, based on information that surfaced late in that rulemaking. See the Technical Support Document for a complete discussion of the rulemaking changes for these engines.

We proposed to add a constraint for averaging, banking, and trading to prevent manufacturers from including credits earned in California or another state if there would ever be a situation in which manufacturers would be making engines with lower emissions to meet more stringent state standards or to earn emission credits under the state program. In the case of nonroad diesel engines, California has adopted our Tier 4 standards without an emission-credit program that does not involve California-specific credit calculations. The proposed provision would therefore have no effect for the foreseeable future. We have decided not to adopt the proposed provision, but expect to pursue this if California adopts more stringent standards or creates a California-specific emission-credit program for these engines (see 40 CFR 1051.701(d)(4)).

*D. Marine Diesel Engines (40 CFR Part 94)*

We are making several changes to our marine diesel engine program, in 40 CFR part 94. These changes are intended to clarify several aspects of the program. These changes are described in detail in the Technical Support Document. This discussion also elaborates on our interpretation of various provisions. For example, we describe how to determine which standards apply to amphibious vehicles and hovercraft. We also explain how we interpret the term ''marine diesel engine'' with respect to auxiliary applications in which it may not be clear whether the engine is ''installed'' on the vessel or not.

*E. Small Nonroad Spark-Ignition Engines (40 CFR Part 90)*

We are adding a new § 90.913 to better define the responsibilities for manufacturers choosing to certify their engines below 19 kW to the emission standards for Large SI engines in 40 CFR part 1048. We are also revising § 90.1 to cross-reference provisions in parts 86, 1048, and 1051 that allow highway motorcycle engines and nonroad engines above 19 kW to meet the requirements in part 90 under certain conditions.

We are making several amendments to the test procedures, such as improving calculations for humidity corrections, adding clarifying language, and adjusting reporting provisions. We are also updating current references to test procedures in 40 CFR part 86 by pointing instead to 40 CFR part 1065. In addition, we are making a variety of minor corrections and clarifications. See the Technical Support Document for a discussion of all these changes.

*F. Marine Spark-Ignition Engines (40 CFR Part 91)*

We are adopting only minimal changes for Marine SI engines in 40 CFR part 91. These changes are primarily to update current references to test procedures in 40 CFR part 86 by pointing instead to 40 CFR part 1065. We are also updating various definitions, as described in Section II.A. Manufacturers raised some issues in the comment period that resulted in further minor corrections and adjustments for the final rule. We also corrected equations for typographical errors.

*G. Large Nonroad Spark-Ignition Engines (40 CFR Part 1048)*

We adopted emission standards for nonroad spark-ignition engines over 19 kW in November 2002 (67 FR 68242). The regulations in 40 CFR part 1048 were our first attempt to draft emission-control regulations in plain-language format. In the recent final rule for nonroad diesel engines, we went through a similar process, including extensive interaction with a different set of manufacturers. This process led us to adopt regulatory provisions in 40 CFR part 1039 that differ somewhat from those in part 1048. Since the process of meeting standards, applying for

certificates, and complying with other emission-related requirements has a lot of commonality across programs, we have a strong interest in adopting consistent provisions and uniform terminology where possible. As a result, we are making extensive changes in part 1048 to align with the regulations in part 1039.

For discussion of these changes, see the Technical Support Document.

*H. Recreational Vehicles (40 CFR Part 1051)*

We adopted emission standards for recreational vehicles in November 2002 (67 FR 68242). The regulations in 40 CFR part 1051 were our first attempt to draft emission-control regulations in plain-language format. In the recent final rule for nonroad diesel engines, we went through a similar process, including extensive interaction with a different set of manufacturers. This process led us to adopt regulatory provisions in 40 CFR part 1039 that differ from those in part 1051. Since the process of meeting standards, applying for certificates, and complying with other emission-related requirements has a lot of commonality across programs, we have a strong interest in adopting consistent provisions and uniform terminology as much as possible. As a result, we are making extensive changes in part 1051 to align with the regulations in part 1039. These provisions are all discussed in more detail in the Technical Support Document.

We proposed to add a constraint for averaging, banking, and trading to prevent manufacturers from including credits earned in California or another state if there would ever be a situation in which manufacturers would be making engines with lower emissions to meet more stringent state standards or to earn emission credits under the state program. We are adopting this provision in the final rule to require exclusion of California sales from federal ABT calculations if a company is subject to more stringent state standards, or if a company generates or uses emissions credits to show that it meets California standards. This provision is necessary to prevent double-counting of emission credits. In the case of recreational vehicles, California adopted emission standards that predate the EPA rulemaking. The California emission standards are based on a similar technology assessment, but are in a different form. For example, California specifies different numerical standards that apply to hydrocarbon emissions only, while EPA's standards apply to $HC+NO_x$ emissions. Given the difficulty in comparing these two sets of standards, we are making the judgment that, for the purposes of ABT calculations, California's current exhaust emission standards are equivalent to the EPA standards. Under the current requirements, companies would therefore exclude their California products from federal ABT calculations only if those products generate or use emission credits under the California program. If California adopts new standards for recreational vehicles, we will again make a judgment regarding the relative stringency of the two programs for ABT purposes.

*I. Locomotives (40 CFR Part 92)*

We proposed a variety of changes for our locomotive regulations in 40 CFR part 92 to correct various technical references and typographical errors. We are finalizing those changes. We are also finalizing other changes in response to comments. The large majority of the comments received regarding locomotives came from the Engine Manufacturers Association (EMA). See the Technical Support Document for additional information. In addition to the changes being finalized, we are also publishing the following clarifications in response to public comments.

EMA asked that remanufacturers be allowed to limit the practice of not replacing every power assembly with remanufactured power assemblies at the time of engine remanufacture. Remanufacturers already can limit this practice just as original manufacturers limit the parts that are used in their locomotives. In fact, remanufacturers would be expected to limit this practice to only those cases in which they can be certain that the previously used power assembly will not cause an engine to exceed an emission standard. By allowing an engine to be remanufactured under its certificate, the remanufacturer is assuming responsibility for the emission performance of that remanufactured engine. We define remanufactured locomotives to be ''new'', and the certificate holder has the same responsibilities as the manufacturer of a freshly manufactured locomotive. The remanufacturer is thus expected to maintain some degree of control over the remanufacturing process to ensure that the remanufactured locomotive. For example, the remanufacturer might limit the certificate to only those engines remanufactured by installers that has been properly trained. It must be noted, however, that while certificate holders have responsibility for the emission performance of locomotives remanufactured under their certificates, 40 CFR 92.209 also assigns responsibility to others involved in the remanufacturing process.

EMA asked that EPA not use the term ''offer for sale'' in the prohibited acts (40 CFR 92.1103). They are concerned that this would be problematic because locomotives are generally manufactured only after a sales agreement has been completed. The manufacturer offers to manufacture and sell a locomotive at least several months before it actually has obtained a certificate of conformity for the locomotive. Given this confusion, we are clarifying that EPA does not interpret the phrase ''offer to sell'' to apply to products that have not yet been manufactured (or remanufactured, as applicable).

EMA asked that EPA exempt replacement engines as we do in other nonroad engine programs. However, such exemption is not necessary with locomotives. Long after the manufacturer has stopped manufacturing brand new engines, that manufacturer (along with other remanufacturers) will be certifying remanufacturing systems. Thus, we believe that the cases in which a brand new engine will be needed will be rare. Nevertheless, we are finalizing a regulatory change in 40 CFR 92.204 to explicitly allow manufacturers to include freshly manufactured locomotive engines in the same engine family as remanufactured locomotives. We believe that this will resolve the issue, since manufacturers would merely need to certify a remanufacturing system for each engine it manufactures.

Finally, we are adopting a provision that will allow manufacturers to certify locomotives that have total power less than 750 kW. This provision will allow manufacturers of hybrid locomotives to certify under 40 CFR part 92. EMA commented that if we do this, we should specify test procedures and duty-cycle weightings for such hybrids. We agree that this would be appropriate in the long term, but do not believe that this rulemaking would be the proper place for such provisions. Instead, we expect to rely on the testing and calculation flexibility of 40 CFR 92.207 and 92.132(e) to certify hybrids on a case-by-case basis.

*J. Highway Engines and Vehicles (40 CFR Parts 85 and 86)*

Most of the changes we are adopting in parts 85 and 86 apply uniquely to different types of vehicles or engines. We are, however, adopting changes to the program for Independent Commercial Importers that affect all the different applications. The Technical

Support Document describes how we are limiting the importation of products where the applicable standards are based on the year of original production. We continue to allow unlimited importation of products where the applicable standards are based on the year of modification.

The following paragraphs provide an overview of the changes for each type of engine or vehicle. See the Technical Support Document for a more detailed discussion of these changes.

1. Light-Duty Vehicles

For light-duty vehicles, we are adopting a variety of clarifications and corrections, especially related to test procedures.

2. Highway Motorcycles

For highway motorcycles, we are correcting fuel specifications, clarifying the requirements related to engine labels, fixing the provisions related to using nonroad certificates for highway motorcycles below 50 cc (consistent with similar changes in other programs), and making a variety of other minor corrections.

3. Heavy-Duty Highway Engines

As discussed above, we are adopting the lab-testing and field-testing specifications in part 1065 for heavy-duty highway engines, including both diesel and Otto-cycle engines. These procedures replace those currently published in 40 CFR part 86, subpart N.

We proposed to complete the migration of heavy-duty highway test procedures to part 1065 by the 2008 model year. Manufacturers pointed out that it would be most appropriate to move this date back to 2010 to correspond with the implementation of the new emission standards in that year. We agree that it would be appropriate to make this transition over several model years to fully migrate to part 1065, no later than model year 2010. Manufacturers do not need to conduct new testing if they are able to use carryover data, but any new testing for 2010 and later model years must be done using the part 1065 procedures. Migrating heavy-duty highway engines to the part 1065 procedures allows us to include all the testing-related improvements in the HD2007 rule, including those we have adopted through guidance.[2] In addition, part 1065 incorporates revisions based on updated procedures for sampling low concentrations of PM.

[2] ''Guidance Regarding Test Procedures for Heavy-Duty On-Highway and Non-Road Engines,'' December 3, 2002.

Another question was raised about how EPA should conduct testing during this transition stage. We intend to incorporate near-term upgrades that would make our testing facilities capable of meeting the requirements in part 1065. Most of the testing methods in part 1065 result in better measurements and should therefore not pose problems, even if manufacturers based their certification on the test procedures specified in part 86. Three exceptions to this include the steps for mapping an engine, denormalizing test cycles, and evaluating cycle-validation criteria. Changing the specified procedure for these three items would involve different engine operation that could cause an engine to have higher or lower emission levels.For all other parameters, the new procedures would be equivalent, or would give more accurate or more precise results. We are therefore specifying that we will follow the manufacturer's procedures for these three items related to engine operation, but will otherwise consider our tests valid if we use procedures from either part 86 or part 1065, regardless of the procedures used by the manufacturer.

EMA responded to our request for comment related to a provision that would allow engine manufacturers to ship certified engines without applicable aftertreatment components, while providing for separate shipment of those components to equipment manufacturers. EMA commented that such a provision would be appropriate, and that it should be set up to require either that the component cost be included in the price of the engine, or auditing requirements for engine manufacturers, but not both, since the equipment manufacturer has enough incentive to make the final installation without additional oversight. We agree with manufacturers that these more flexible arrangements are appropriate for the prevailing business relationships for heavy-duty highway engines. There are far fewer manufacturers producing heavy-duty trucks and buses than nonroad equipment. Engine manufacturers are therefore expected to be able to maintain control with an approach that requires them either to include the price of the aftertreatment in the engine price or to conduct periodic audits of vehicle manufacturers, but not both. In the periodic audit we require manufacturers to confirm the number of aftertreatment component shipped is sufficient for the applicable vehicle production. This confirmation is intended to show that the vehicle manufacturers have purchasing and manufacturing processes in place to ensure that they are ordering and receiving enough aftertreatment components and that each vehicles is equipped with the correct components. To reduce the risk of noncompliance where the engine and aftertreatment components are not priced together, we require that engine manufacturers have a written confirmation that the vehicle manufacturer has ordered the appropriate aftertreatment before shipping engines without the otherwise required aftertreatment components.

We are adopting a test-related provision that was described in the proposal. We requested comment on approaches to address the concern that some engines experience significant overspeed excursions when following the proposed approach to defining maximum test speed and denormalizing duty cycles. As described in the Technical Support Document, we are finalizing a provision to define maximum test speed at the highest speed point at which engines are expected to operate in use.

## III. Public Participation

In the proposed rule, we invited public participation in a public hearing, a public workshop, and a comment period for written comments. No one responded to indicate in interest in the public hearing, but we held the public workshop to talk through a wide range of issues. We also received written comments from about 20 organizations, mostly representing manufacturers. Several principle issues raised by commenters are described in the individual sections above. The Final Technical Support Document addresses the full range of comments.

## IV. Statutory and Executive Order Reviews

### *A. Executive Order 12866: Regulatory Planning and Review*

Under Executive Order 12866 the Agency must determine whether the regulatory action is ''significant'' and therefore subject to review by the Office of Management and Budget (OMB) and the requirements of this Executive Order. The Executive Order defines a ''significant regulatory action'' as any regulatory action that is likely to result in a rule that may:

- Have an annual effect on the economy of $100 million or more or adversely affect in a material way the economy, a sector of the economy, productivity, competition, jobs, the environment, public health or safety, or State, Local, or Tribal governments or communities;

• Create a serious inconsistency or otherwise interfere with an action taken or planned by another agency;

• Materially alter the budgetary impact of entitlements, grants, user fees, or loan programs, or the rights and obligations of recipients thereof; or

• Raise novel legal or policy issues arising out of legal mandates, the President's priorities, or the principles set forth in the Executive Order.

The Office of Management and Budget reviewed this rule under the provisions of Executive Order 12866. Any new costs associated with this rule will be minimal. In addition, some of the changes will substantially reduce the burden associated with testing, as described in the Regulatory Support Document.

*B. Paperwork Reduction Act*

This rule does not include any new collection requirements, as it merely revises the measurement methods and makes a variety of technical amendments to existing programs.

*C. Regulatory Flexibility Act*

EPA has determined that it is not necessary to prepare a regulatory flexibility analysis in connection with this final rule.

For purposes of assessing the impacts of this final rule on small entities, a small entity is defined as: (1) A small business as defined in the underlying rulemakings for each individual category of engines; (2) a small governmental jurisdiction that is a government of a city, county, town, school district or special district with a population of less than 50,000; and (3) a small organization that is any not-for-profit enterprise which is independently owned and operated and is not dominant in its field.

After considering the economic impacts of this final rule on small entities, EPA has concluded that this action will not have a significant economic impact on a substantial number of small entities. The small entities directly regulated by this rule are small businesses that produce nonroad engines. We have determined that no small entities will be negatively affected as a result of this rule. This rule merely revises the measurement methods and makes a variety of technical amendments to existing programs. This rule, therefore, does not require a regulatory flexibility analysis.

Although this rule will not have a significant economic impact on a substantial number of small entities, EPA nonetheless has tried to reduce the impact of this rule on small entities. For example, most of the changes clarify existing requirements, which will reduce the time needed to comply, and added flexibility, which may allow for a simpler effort to comply.

*D. Unfunded Mandates Reform Act*

Title II of the Unfunded Mandates Reform Act of 1995 (UMRA), Public Law. 104–4, establishes requirements for federal agencies to assess the effects of their regulatory actions on state, local, and tribal governments and the private sector. Under section 202 of the UMRA, EPA generally must prepare a written statement, including a cost-benefit analysis, for proposed and final rules with ''federal mandates'' that may result in expenditures to state, local, and tribal governments, in the aggregate, or to the private sector, of $100 million or more in any one year. Before promulgating an EPA rule for which a written statement is needed, section 205 of the UMRA generally requires EPA to identify and consider a reasonable number of regulatory alternatives and adopt the least costly, most cost-effective, or least burdensome alternative that achieves the objectives of the rule. The provisions of section 205 do not apply when they are inconsistent with applicable law. Moreover, section 205 allows EPA to adopt an alternative other than the least costly, most cost-effective, or least burdensome alternative if the Administrator publishes with the final rule an explanation of why that alternative was not adopted.

Before EPA establishes any regulatory requirements that may significantly or uniquely affect small governments, including tribal governments, it must have developed under section 203 of the UMRA a small government agency plan. The plan must provide for notifying potentially affected small governments, enabling officials of affected small governments to have meaningful and timely input in the development of EPA regulatory proposals with significant federal intergovernmental mandates, and informing, educating, and advising small governments on compliance with the regulatory requirements.

This rule contains no federal mandates for state, local, or tribal governments as defined by the provisions of Title II of the UMRA. The rule imposes no enforceable duties on any of these governmental entities. Nothing in the rule significantly or uniquely affects small governments. We have determined that this rule contains no federal mandates that may result in expenditures of more than $100 million to the private sector in any single year. This rule merely revises the measurement methods and makes a variety of technical amendments to existing programs. The requirements of UMRA therefore do not apply to this action.

*E. Executive Order 13132: Federalism*

Executive Order 13132, entitled ''Federalism'' (64 FR 43255, August 10, 1999), requires EPA to develop an accountable process to ensure ''meaningful and timely input by State and local officials in the development of regulatory policies that have federalism implications.'' ''Policies that have federalism implications'' is defined in the Executive Order to include regulations that have ''substantial direct effects on the states, on the relationship between the national government and the States, or on the distribution of power and responsibilities among the various levels of government.''

Under Section 6 of Executive Order 13132, EPA may not issue a regulation that has federalism implications, that imposes substantial direct compliance costs, and that is not required by statute, unless the Federal government provides the funds necessary to pay the direct compliance costs incurred by State and local governments, or EPA consults with State and local officials early in the process of developing the proposed regulation. EPA also may not issue a regulation that has federalism implications and that preempts State law, unless the Agency consults with State and local officials early in the process of developing the proposed regulation.

Section 4 of the Executive Order contains additional requirements for rules that preempt State or local law, even if those rules do not have federalism implications (*i.e.*, the rules will not have substantial direct effects on the States, on the relationship between the national government and the states, or on the distribution of power and responsibilities among the various levels of government). Those requirements include providing all affected State and local officials notice and an opportunity for appropriate participation in the development of the regulation. If the preemption is not based on express or implied statutory authority, EPA also must consult, to the extent practicable, with appropriate State and local officials regarding the conflict between State law and Federally protected interests within the agency's area of regulatory responsibility.

This rule does not have federalism implications. It will not have substantial direct effects on the States, on the relationship between the national government and the States, or on the

distribution of power and responsibilities among the various levels of government, as specified in Executive Order 13132.

*F. Executive Order 13175: Consultation and Coordination With Indian Tribal Governments*

Executive Order 13175, entitled ''Consultation and Coordination with Indian Tribal Governments'' (65 FR 67249, November 6, 2000), requires EPA to develop an accountable process to ensure ''meaningful and timely input by tribal officials in the development of regulatory policies that have tribal implications.''

This rule does not have tribal implications as specified in Executive Order 13175. This rule will be implemented at the Federal level and impose compliance costs only on engine manufacturers and ship builders. Tribal governments will be affected only to the extent they purchase and use equipment with regulated engines. Thus, Executive Order 13175 does not apply to this rule.

*G. Executive Order 13045: Protection of Children From Environmental Health and Safety Risks*

Executive Order 13045, ''Protection of Children from Environmental Health Risks and Safety Risks'' (62 FR 19885, April 23, 1997) applies to any rule that (1) is determined to be ''economically significant'' as defined under Executive Order 12866, and (2) concerns an environmental health or safety risk that EPA has reason to believe may have a disproportionate effect on children. If the regulatory action meets both criteria, Section 5–501 of the Order directs the Agency to evaluate the environmental health or safety effects of the planned rule on children, and explain why the planned regulation is preferable to other potentially effective and reasonably feasible alternatives considered by the Agency.

This rule is not subject to the Executive Order because it does not involve decisions on environmental health or safety risks that may disproportionately affect children.

*H. Executive Order 13211: Actions That Significantly Affect Energy Supply, Distribution, or Use*

This rule is not a ''significant energy action'' as defined in Executive Order 13211, ''Actions Concerning Regulations That Significantly Affect Energy Supply, Distribution, or Use'' (66 FR 28355 (May 22, 2001)), because it is not likely to have a significant effect on the supply, distribution, or use of energy.

*I. National Technology Transfer Advancement Act*

Section 12(d) of the National Technology Transfer and Advancement Act of 1995 (''NTTAA''), Public Law 104–113, section 12(d) (15 U.S.C. 272 note) directs EPA to use voluntary consensus standards in its regulatory activities unless doing so would be inconsistent with applicable law or otherwise impractical. Voluntary consensus standards are technical standards (*e.g.*, materials specifications, test methods, sampling procedures, and business practices) that are developed or adopted by voluntary consensus standards bodies. NTTAA directs EPA to provide Congress, through OMB, explanations when the Agency decides not to use available and applicable voluntary consensus standards.

This rule involves technical standards. The International Organization for Standardization (ISO) has a voluntary consensus standard that can be used to test engines. However, the test procedures in this final rule reflect a level of development that goes substantially beyond the ISO or other published procedures. The procedures incorporate new specifications for transient emission measurements, measuring PM emissions at very low levels, measuring emissions using field-testing procedures. The procedures we adopt in this rule will form the working template for ISO and national and state governments to define test procedures for measuring engine emissions. As such, we have worked extensively with the representatives of other governments, testing organizations, and the affected industries.

*J. Congressional Review Act*

The Congressional Review Act, 5 U.S.C. 801 *et seq.*, as added by the Small Business Regulatory Enforcement Fairness Act of 1996, generally provides that before a rule may take effect, the agency promulgating the rule must submit a rule report, which includes a copy of the rule, to each House of the Congress and to the Comptroller General of the United States. EPA will submit a report containing this rule and other required information to the U.S. Senate, the U.S. House of Representatives, and the Comptroller General of the United States prior to publication of the rule in the **Federal Register**. This rule is not a ''major rule'' as defined by 5 U.S.C. 804(2).

**V. Statutory Provisions and Legal Authority**

Statutory authority for the engine controls adopted in this rule is in 42 U.S.C. 7401—7671q.

**List of Subjects**

*40 CFR Part 85*

Confidential business information, Imports, Labeling, Motor vehicle pollution, Reporting and recordkeeping requirements, Research, Warranties.

*40 CFR Part 86*

Administrative practice and procedure, Confidential business information, Labeling, Motor vehicle pollution, Reporting and recordkeeping requirements.

*40 CFR Part 89*

Environmental protection, Administrative practice and procedure, Confidential business information, Imports, Labeling, Motor vehicle pollution, Reporting and recordkeeping requirements, Research, Vessels, Warranties.

*40 CFR Part 90*

Environmental protection, Administrative practice and procedure, Air pollution control, Confidential business information, Imports, Labeling, Reporting and recordkeeping requirements, Research, Warranties.

*40 CFR Part 91*

Environmental protection, Administrative practice and procedure, Air pollution control, Confidential business information, Imports, Labeling, Penalties, Reporting and recordkeeping requirements, Warranties

*40 CFR Part 92*

Administrative practice and procedure, Air pollution control, Confidential business information, Imports, Labeling, Railroads, Reporting and recordkeeping requirements, Warranties

*40 CFR Part 94*

Environmental protection, Administrative practice and procedure, Air pollution control, Confidential business information, Imports, Penalties, Reporting and recordkeeping requirements, Vessels, Warranties.

*40 CFR Parts 1039, 1048, and 1051*

Environmental protection, Administrative practice and procedure, Air pollution control, Confidential business information, Imports, Labeling, Penalties, Reporting and recordkeeping requirements, Warranties.

*40 CFR Part 1065*

Environmental protection, Administrative practice and procedure, Incorporation by reference, Reporting and recordkeeping requirements, Research.

*40 CFR Part 1068*

Environmental protection, Administrative practice and procedure, Confidential business information, Imports, Motor vehicle pollution, Penalties, Reporting and recordkeeping requirements, Warranties.

Dated: June 3, 2005.

**Stephen L. Johnson,**

*Administrator.*

■ For the reasons set out in the preamble, title 40, chapter I of the Code of Federal Regulations is amended as follows:

## PART 85—CONTROL OF AIR POLLUTION FROM MOBILE SOURCES

■ 1. The authority citation for part 85 continues to read as follows:

**Authority:** 42 U.S.C. 7401–7671q.

■ 2. Section 85.1502 is amended by revising paragraph (a)(14) to read as follows:

### § 85.1502 Definitions.

(a) * * *

(14) *United States.* United States includes the States, the District of Columbia, the Commonwealth of Puerto Rico, the Commonwealth of the Northern Mariana Islands, Guam, American Samoa, and the U.S. Virgin Islands.

* * * * *

■ 3. Section 85.1503 is amended by revising the section heading and adding paragraphs (c), (d), and (e) to read as follows:

### § 85.1503 General requirements for importation of nonconforming vehicles and engines.

* * * * *

(c) In any one certificate year (*e.g.*, the current model year), an ICI may finally admit no more than the following numbers of nonconforming vehicles or engines into the United States under the provisions of § 85.1505 and § 85.1509, except as allowed by paragraph (e) of this section:

(1) 5 heavy-duty engines.

(2) A total of 50 light-duty vehicles, light-duty trucks, and medium-duty passenger vehicles.

(3) 50 highway motorcycles.

(d) For ICIs owned by a parent company, the importation limits in paragraph (c) of this section include importation by the parent company and all its subsidiaries.

(e) An ICI may exceed the limits outlined paragraphs (c) and (d) of this section, provided that any vehicles/engines in excess of the limits meet the emission standards and other requirements outlined in the provisions of § 85.1515 for the model year in which the motor vehicle/engine is modified (instead of the emission standards and other requirements applicable for the OP year of the vehicle/engine).

■ 4. Section 85.1513 is amended by revising paragraph (d) to read as follows:

### § 85.1513 Prohibited acts; penalties.

* * * * *

(d) Any importer who violates section 203(a)(1) of the Act is subject to a civil penalty under section 205 of the Act of not more than $32,500 for each vehicle or engine subject to the violation. In addition to the penalty provided in the Act, where applicable, under the exemption provisions of § 85.1511(b), or under § 85.1512, any person or entity who fails to deliver such vehicle or engine to the U.S. Customs Service is liable for liquidated damages in the amount of the bond required by applicable Customs laws and regulations.

* * * * *

■ 5. Section 85.1515 is amended by revising paragraphs (c)(1) and (c)(2) to read as follows:

### § 85.1515 Emission standards and test procedures applicable to imported nonconforming motor vehicles and motor vehicle engines.

* * * * *

(c)(1) Nonconforming motor vehicles or motor vehicle engines of 1994 OP model year and later conditionally imported pursuant to § 85.1505 or § 85.1509 shall meet all of the emission standards specified in 40 CFR part 86 for the OP year of the vehicle or motor vehicle engine. At the option of the ICI, the nonconforming motor vehicle may comply with the emissions standards in 40 CFR 86.1708–99 or 86.1709–99, as applicable to a light-duty vehicle or light light-duty truck, in lieu of the otherwise applicable emissions standards specified in 40 CFR part 86 for the OP year of the vehicle. The provisions of 40 CFR 86.1710–99 do not apply to imported nonconforming motor vehicles. The useful life specified in 40 CFR part 86 for the OP year of the motor vehicle or motor vehicle engine is applicable where useful life is not designated in this subpart.

(2)(i) Nonconforming light-duty vehicles and light light-duty trucks(LDV/LLDTs) originally manufactured in OP years 2004, 2005 or 2006 must meet the FTP exhaust emission standards of bin 9 in Tables S04–1 and S04–2 in 40 CFR 86.1811–04 and the evaporative emission standards for light-duty vehicles and light light-duty trucks specified in 40 CFR 86.1811–01(e)(5).

(ii) Nonconforming LDT3s and LDT4s (HLDTs) and medium-duty passenger vehicles (MDPVs) originally manufactured in OP years 2004 through 2006 must meet the FTP exhaust emission standards of bin 10 in Tables S04–1 and S04–2 in 40 CFR 86.1811–04 and the applicable evaporative emission standards specified in 40 CFR 86.1811–04(e)(5). For 2004 OP year HLDTs and MDPVs where modifications commence on the first vehicle of a test group before December 21, 2003, this requirement does not apply to the 2004 OP year. ICIs opting to bring all of their 2004 OP year HLDTs and MDPVs into compliance with the exhaust emission standards of bin 10 in Tables S04–1 and S04–2 in 40 CFR 86.1811–04 , may use the optional higher NMOG values for their 2004–2006 OP year LDT2s and 2004–2008 LDT4s.

(iii) Nonconforming LDT3s and LDT4s (HLDTs) and medium-duty passenger vehicles (MDPVs) originally manufactured in OP years 2007 and 2008 must meet the FTP exhaust emission standards of bin 8 in Tables S04–1 and S04–2 in 40 CFR 86.1811–04 and the applicable evaporative standards specified in 40 CFR 86.1811–04(e)(5).

(iv) Nonconforming LDV/LDTs originally manufactured in OP years 2007 and later and nonconforming HLDTs and MDPVs originally manufactured in OP years 2009 and later must meet the FTP exhaust emission standards of bin 5 in Tables S04–1 and S04–2 in 40 CFR 86.1811–04, and the evaporative standards specified in 40 CFR 86.1811(e)(1) through (e)(4).

(v) ICIs are exempt from the Tier 2 and the interim non-Tier2 phase-in intermediate percentage requirements for exhaust, evaporative, and refueling emissions described in 40 CFR 86.1811–04.

(vi) In cases where multiple standards exist in a given model year in 40 CFR part 86 due to phase-in requirements of new standards, the applicable standards for motor vehicle engines required to be certified to engine-based standards are the least stringent standards applicable to the engine type for the OP year.

* * * * *

■ 6. Section 85.1713 is added to subpart R to read as follows:

### § 85.1713 Delegated-assembly exemption.

The provisions of this section apply for manufacturers of heavy-duty

highway engines. (a) Shipping an engine separately from an aftertreatment component that you have specified as part of its certified configuration will not be a violation of the prohibitions in Clean Air Act section 203 (42 U.S.C. 7522), if you follow the provisions of paragraph (b) or (c) of this section.

(b) If you include the cost of all aftertreatment components in the cost of the engine and ship the aftertreatment components directly to the vehicle manufacturer, or arrange for separate shipment by the component manufacturer to the vehicle manufacturer, you must meet all the following conditions:

(1) Apply for and receive a certificate of conformity for the engine and its emission-control system before shipment.

(2) Provide installation instructions in enough detail to ensure that the engine will be in its certified configuration if someone follows these instructions.

(3) Have a contractual agreement with a vehicle manufacturer obligating the vehicle manufacturer to complete the final assembly of the engine so it is in its certified configuration when installed in the vehicle. This agreement must also obligate the vehicle manufacturer to provide the affidavits required under paragraph (b)(4) of this section.

(4) Take appropriate additional steps to ensure that all engines will be in their certified configuration when installed by the vehicle manufacturer. At a minimum, you must obtain annual affidavits from every vehicle manufacturer to whom you sell engines under this section. Include engines that you sell through distributors or dealers. The affidavits must list the part numbers of the aftertreatment devices that vehicle manufacturers install on each engine they purchase from you under this section.

(5) Describe in your application for certification how you plan to use the provisions of this section and any steps you plan to take under paragraph (b)(3) of this section.

(6) Keep records to document how many engines you produce under this exemption. Also, keep records to document your contractual agreements under paragraph (b)(3) of this section. Keep all these records for five years after the end of the model year and make them available to us upon request.

(7) Make sure the engine has the emission control information label we require under the standard-setting part.

(c) If you do not include the cost of all aftertreatment components in the cost of the engine, you must meet all the conditions described in paragraphs (b)(1) through (7) of this section, with the following additional provisions:

(1) The contractual agreement described in paragraph (b)(3) of this section must include a commitment that the vehicle manufacturer will do the following things:

(i) Separately purchase the aftertreatment components you have specified in your application for certification.

(ii) Perform audits as described in paragraph (c)(3) of this section.

(2) Before you ship an engine under the provisions of this paragraph (c), you must have written confirmation that the vehicle manufacturer has ordered the appropriate aftertreatment components.

(3) You must audit vehicle manufacturers as follows:

(i) If you sell engines to 16 or more vehicle manufacturers under the provisions of this section, you must annually audit four vehicle manufacturers to whom you sell engines under this section. To select individual vehicle manufacturers, divide all the affected vehicle manufacturers into quartiles based on the number of engines they buy from you; select a single vehicle manufacturer from each quartile each model year. Vary the vehicle manufacturers you audit from year to year, though you may repeat an audit in a later model year if you find or suspect that a particular vehicle manufacturer is not properly installing aftertreatment devices.

(ii) If you sell engines to fewer than 16 vehicle manufacturers under the provisions of this section, set up a plan to audit each vehicle manufacturer on average once every four model years.

(iii) Starting with the 2014 model year, if you sell engines to fewer than 40 vehicle manufacturers under the provisions of this section, you may ask us to approve a reduced auditing rate. We may approve an alternate plan that involves auditing each vehicle manufacturer on average once every ten model years, as long as you show that you have met the auditing requirements in preceding years without finding noncompliance or improper procedures.

(iv) Audits must involve the assembling companies' facilities, procedures, and production records to monitor their compliance with your instructions, must include investigation of some assembled engines, and must confirm that the number of aftertreatment devices shipped were sufficient for the number of engines produced. Where a vehicle manufacturer is not located in the United States, you may conduct the audit at a distribution or port facility in the United States.

(v) If you produce engines and use them to produce vehicles under the provisions of this section, you must take steps to ensure that your facilities, procedures, and production records are set up to ensure compliance with the provisions of this section, but you may meet your auditing responsibilities under this paragraph (c)(3) of this section by maintaining a database showing how you pair aftertreatment components with the appropriate engines.

(vi) You must keep records of these audits for five years after the end of the model year and provide a report to us describing any uninstalled or improperly installed aftertreatment components. Send us these reports within 90 days of the audit, except as specified in paragraph (f) of this section.

(4) In your application for certification, give a detailed plan for auditing vehicle manufacturers, as described in paragraph (c)(3) of this section.

(d) An engine you produce under this section becomes new when it is fully assembled, except for aftertreatment devices, for the first time. Use this date to determine the engine's model year.

(e) Once the vehicle manufacturer takes possession of an engine exempted under this section, the exemption expires and the engine is subject to all the prohibitions in CleanAir Act section 203 (42 U.S.C. 7522).

(f) You must notify us within 15 days if you find from an audit or another source that a vehicle manufacturer has failed to meet its obligations under this section.

(g) We may suspend, revoke, or void an exemption under this section, as follows:

(1) We may suspend or revoke your exemption for the entire engine family if we determine that any of the engines are not in their certified configuration after installation in the vehicle, or if you fail to comply with the requirements of this section. If we suspend or revoke the exemption for any of your engine families under this paragraph (g), this exemption will not apply for future certificates unless you demonstrate that the factors causing the nonconformity do not apply to the other engine families. We may suspend or revoke the exemption for shipments to a single facility where final assembly occurs.

(2) We may void your exemption for the entire engine family if you intentionally submit false or incomplete information or fail to keep and provide to EPA the records required by this section.

(h) You are liable for the in-use compliance of any engine that is exempt under this section.

(i) It is a violation of the Act for any person to complete assembly of the exempted engine without complying fully with the installation instructions.

(j) [Reserved]

(k) You may ask us to provide a temporary exemption to allow you to complete production of your engines at different facilities, as long as you maintain control of the engines until they are in their certified configuration. We may require you to take specific steps to ensure that such engines are in their certified configuration before reaching the ultimate purchaser. You may request an exemption under this paragraph (k) in your application for certification, or in a separate submission.

■ 7. Section 85.2111 is amended by revising the introductory text and adding paragraph (d) to read as follows:

**§ 85.2111 Warranty enforcement.**

The following acts are prohibited and may subject a manufacturer to up to a $32,500 civil penalty for each offense, except as noted in paragraph (d) of this section:

* * * * *

(d) The maximum penalty value listed in this section is shown for calendar year 2004. Maximum penalty limits for later years may be adjusted based on the Consumer Price Index. The specific regulatory provisions for changing the maximum penalties, published in 40 CFR part 19, reference the applicable U.S. Code citation on which the prohibited action is based.

■ 8. Appendix II to subpart V is amended by revising section 1 of part A to read as follows:

## Appendix II to Subpart V of Part 85—Arbitration Rules

### Part A—Pre-Hearing

*Section 1: Initiation of Arbitration*

Either party may commence an arbitration under these rules by filing at any regional office of the American Arbitration Association (the AAA) three copies of a written submission to arbitrate under these rules, signed by either party. It shall contain a statement of the matter in dispute, the amount of money involved, the remedy sought, and the hearing locale requested, together with the appropriate administrative fee as provided in the Administrative Fee Schedule of the AAA in effect at the time the arbitration is filed. The filing party shall notify the MOD Director in writing within 14 days of when it files for arbitration and provide the MOD Director with the date of receipt of the bill by the part manufacturer.

Unless the AAA in its discretion determines otherwise and no party disagrees, the Expedited Procedures (as described in Part E of these Rules) shall be applied in any case where no disclosed claim or counterclaim exceeds $32,500, exclusive of interest and arbitration costs. Parties may also agree to the Expedited Procedures in cases involving claims in excess of $32,500.

All other cases, including those involving claims not in excess of $32,500 where either party so desires, shall be administered in accordance with Parts A through D of these Rules.

* * * * *

## PART 86—CONTROL OF EMISSIONS FROM NEW AND IN-USE HIGHWAY VEHICLES AND ENGINES

■ 9. The authority citation for part 86 continues to read as follows:

**Authority:** 42 U.S.C. 7401–7671q.

■ 10. Section 86.004–16 is amended by revising paragraph (d) to read as follows:

**§ 86.004–16 Prohibition of defeat devices.**

* * * * *

(d) For vehicle and engine designs designated by the Administrator to be investigated for possible defeat devices:

(1) *General.* The manufacturer must show to the satisfaction of the Administrator that the vehicle or engine design does not incorporate strategies that reduce emission control effectiveness exhibited during the applicable Federal emissions test procedures when the vehicle or engine is operated under conditions which may reasonably be expected to be encountered in normal operation and use, unless one of the specific exceptions set forth in the definition of ''defeat device'' in § 86.004–2 has been met.

(2) *Information submissions required.* The manufacturer will provide an explanation containing detailed information (including information which the Administrator may request to be submitted) regarding test programs, engineering evaluations, design specifications, calibrations, on-board computer algorithms, and design strategies incorporated for operation both during and outside of the applicable Federal emission test procedure.

■ 11. Section 86.004–26 is amended by revising paragraph (c)(4) to read as follows:

**§ 86.004–26 Mileage and service accumulation; emission measurements.**

* * * * *

(c) * * *

(4) The manufacturer shall determine, for each engine family, the number of hours at which the engine system combination is stabilized for emission-data testing. The manufacturer shall maintain, and provide to the Administrator if requested, a record of the rationale used in making this determination. The manufacturer may elect to accumulate 125 hours on each test engine within an engine family without making a determination. Any engine used to represent emission-data engine selections under § 86.094–24(b)(2) shall be equipped with an engine system combination that has accumulated at least the number of hours determined under this paragraph. Complete exhaust emission tests shall be conducted for each emission-data engine selection under § 86.094–24(b)(2). Evaporative emission controls must be connected, as described in 40 CFR part 1065, subpart F. The Administrator may determine under § 86.094–24(f) that no testing is required.

* * * * *

■ 12. Section 86.007–11 is amended by revising paragraphs (a)(2) and (a)(3)(i) and adding paragraph (g)(6) to read as follows:

**§ 86.007–11 Emission standards and supplemental requirements for 2007 and later model year heavy-duty engines and vehicles.**

* * * * *

(a) * * *

(2) The standards set forth in paragraph (a)(1) of this section refer to the exhaust emitted over the duty cycle specified in paragraphs (a)(2)(i) through (iii) of this section, where exhaust emissions are measured and calculated as specified in paragraphs (a)(2)(iv) and (v) of this section in accordance with the procedures set forth in 40 CFR part 1065, except as noted in § 86.007–23(c)(2):

(i) Perform the test interval set forth in paragraph (f)(2) of Appendix I of this part with a cold-start according to 40 CFR part 1065, subpart F. This is the cold-start test interval.

(ii) Shut down the engine after completing the test interval and allow 20 minutes to elapse. This is the hot-soak.

(iii) Repeat the test interval. This is the hot-start test interval.

(iv) Calculate the total emission mass of each constituent, m, and the total work, W, over each test interval according to 40 CFR 1065.650.

(v) Determine your engine's brake-specific emissions using the following calculation, which weights the emissions from the cold-start and hot-start test intervals:

$$\text{brake-specific emissions} = \frac{m_{\text{cold-start}} + 6\square m_{\text{hot-start}}}{W_{\text{cold-start}} + 6\square W_{\text{hot-start}}}$$

(3) * * *

(i) Exhaust emissions, as determined under § 86.1360–2007(b) pertaining to the supplemental emission test cycle, for each regulated pollutant shall not exceed 1.0 times the applicable emission standards or FELs specified in paragraph (a)(1) of this section.

* * * * *

(g) * * *

(6) Manufacturers may determine the number of engines and vehicles that are required to certify to the $NO_X$ standard in this section (including the phase-out engines certified to the $NO_X$+NMHC standard referenced in this paragraph(g)) based on calendar years 2007, 2008, and 2009, rather than model years 2007, 2008, and 2009.

* * * * *

■ 13. Section 86.007–21 is amended by revising paragraph (o) to read as follows:

**§ 86.007–21 Application for certification.**

* * * * *

(o) For diesel heavy-duty engines, the manufacturer must provide the following additional information pertaining to the supplemental emission test conducted under § 86.1360–2007:

(1) Weighted brake-specific emissions data (*i.e.*, in units of g/bhp-hr), calculated according to 40 CFR 1065.650 for all pollutants for which a brake-specific emission standard is established in this subpart;

(2) For engines subject to the MAEL (see § 86.007–11(a)(3)(ii)), brake specific gaseous emission data for each of the 12 non-idle test points (identified under § 86.1360–2007(b)(1)) and the 3 EPA-selected test points (identified under § 86.1360–2007(b)(2));

(3) For engines subject to the MAEL (see § 86.007–11(a)(3)(ii)), concentrations and mass flow rates of all regulated gaseous emissions plus carbon dioxide;

(4) Values of all emission-related engine control variables at each test point;

(5) A statement that the test results correspond to the test engine selection criteria in 40 CFR 1065.401. The manufacturer also must maintain records at the manufacturer's facility which contain all test data, engineering analyses, and other information which provides the basis for this statement, where such information exists. The manufacturer must provide such information to the Administrator upon request;

(6) For engines subject to the MAEL (see § 86.007–11(a)(3)(ii)), a statement that the engines will comply with the weighted average emissions standard and interpolated values comply with the Maximum Allowable Emission Limits specified in § 86.007–11(a)(3) for the useful life of the engine where applicable. The manufacturer also must maintain records at the manufacturer's facility which contain a detailed description of all test data, engineering analyses, and other information which provides the basis for this statement, where such information exists. The manufacturer must provide such information to the Administrator upon request.

(7) [Reserved]

* * * * *

■ 14. Section 86.007–35 is amended by revising paragraph (c) to read as follows:

**§ 86.007–35 Labeling.**

* * * * *

(c) Vehicles powered by model year 2007 and later diesel-fueled engines must include permanent, readily visible labels on the dashboard (or instrument panel) and near all fuel inlets that state ''Use Ultra Low Sulfur Diesel Fuel Only''; or ''Ultra Low Sulfur DieselFuel Only''.

* * * * *

■ 15. Part 86 is amended by removing the first § 86.008–10, which was added on October 6, 2000.

■ 16. Section 86.084–2 is amended by revising the definition for ''Curb-idle'' to read as follows:

**§ 86.084–2 Definitions.**

* * * * *

*Curb-idle* means:

(1) For manual transmission code light-duty trucks, the engine speed with the transmission in neutral or with the clutch disengaged and with the air conditioning system, if present, turned off. For automatic transmission code light-duty trucks, curb-idle means the engine speed with the automatic transmission in the Park position (or Neutral position if there is no Park position), and with the air conditioning system, if present, turned off.

(2) For manual transmission code heavy-duty engines, the manufacturer's recommended engine speed with the clutch disengaged. For automatic transmission code heavy-duty engines, curb idle means the manufacturer's recommended engine speed with the automatic transmission in gear and the output shaft stalled. (Measured idle speed may be used in lieu of curb-idle speed for the emission tests when the difference between measured idle speed and curb idle speed is sufficient to cause a void test under 40 CFR 1065.530 but not sufficient to permit adjustment in accordance with 40 CFR part 1065, subpart E.

* * * * *

■ 17. Section 86.095–35 is amended by revising paragraph (a)(3)(iii)(B) to read as follows:

**§ 86.095–35 Labeling.**

* * * * *

(a) * * *

(3) * * *

(iii) * * *

(B) The full corporate name and trademark of the manufacturer; though the label may identify another company and use its trademark instead of the manufacturer's as long as the manufacturer complies with the provisions of 40CFR 1039.640.

* * * * *

■ 18. Section 86.096–38 is amended by revising paragraph (g)(19)(iii) to read as follows:

**§ 86.096–38 Maintenance instructions.**

* * * * *

(g) * * *

(19) * * *

(iii) Any person who violates a provision of this paragraph (g) shall be subject to a civil penalty of not more than $32,500 per day for each violation. This maximum penalty is shown for calendar year 2004. Maximum penalty limits for later years may be set higher based on the Consumer Price Index, as specified in 40 CFR part 19. In addition, such person shall be liable for all other remedies set forth in Title II of the Clean Air Act, remedies pertaining to provisions of Title II of the Clean Air Act, or other applicable provisions of law.

■ 19. Section 86.121–90 is amended by revising paragraph (d) introductory text to read as follows:

**§ 86.121–90 Hydrocarbon analyzer calibration.**

* * * * *

(d) *FID response factor to methane.* When the FID analyzer is to be used for the analysis of gasoline, diesel, methanol, ethanol, liquefied petroleum gas, and natural gas-fueled vehicle hydrocarbon samples, the methane

response factor of the analyzer must be established. To determine the total hydrocarbon FID response to methane, known methane in air concentrations traceable to the National Institute of Standards andTechnology (NIST) must be analyzed by the FID. Several methane concentrations must be analyzed by the FID in the range of concentrations in the exhaust sample. The total hydrocarbon FID response to methane is calculated as follows:

$r_{CH4}$=FIDppm/SAMppm

Where:

* * * * *

■ 20. Section 86.144–94 is amended by revising paragraph (c)(8)(vi) to read as follows:

**§ 86.144–94 Calculations; exhaust emissions.**

* * * * *

(c) * * *

(8) * * *

(vi) rCH4=HC FID response to methane as measured in § 86.121(d).

* * * * *

■ 21. Section 86.158–00 is amended by revising the introductory text to read as follows:

**§ 86.158–00 Supplemental Federal Test Procedures; overview.**

The procedures described in §§ 86.158–00, 86.159–00, 86.160–00, and 86.162–00 discuss the aggressive driving (US06) and air conditioning (SC03) elements of the Supplemental Federal Test Procedures (SFTP). These test procedures consist of two separable test elements: A sequence of vehicle operation that tests exhaust emissions with a driving schedule (US06) that tests exhaust emissions under high speeds and accelerations (aggressive driving); and a sequence of vehicle operation that tests exhaust emissions with a driving schedule (SC03) which includes the impacts of actual air conditioning operation. These test procedures (and the associated standards set forth in subpart S of this part) are applicable to light-duty vehicles and light-duty trucks.

* * * * *

■ 22. Section 86.159–00 is amended by revising paragraph (f)(2)(ix) to read as follows:

**§ 86.159–00 Exhaust emission test procedure for US06 emissions.**

* * * * *

(f) * * *

(2) * * *

(ix) Turn the engine off 2 seconds after the end of the last deceleration (i.e., engine off at 596 seconds).

* * * * *

■ 23. Section 86.160–00 is amended by revising the first sentence of paragraph (a), and paragraphs (c)(10), (c)(12), (d)(10), and (d)(13) to read as follows:

**§ 86.160–00 Exhaust emission test procedure for SC03 emissions.**

(a) Overview. The dynamometer operation consists of a single, 600 second test on the SC03 driving schedule, as described in appendix I, paragraph (h), of this part. * * *

* * * * *

(c) * * *

(10) Eighteen seconds after the engine starts, begin the initial vehicle acceleration of the driving schedule.

* * * * *

(12) Turn the engine off 2 seconds after the end of the last deceleration (i.e., engine off at 596 seconds).

* * * * *

(d) * * *

(10) Turn the engine off 2 seconds after the end of the last deceleration (i.e., engine off at 596 seconds).

* * * * *

(13) Immediately after the end of the sample period, turn off the cooling fan, disconnect the exhaust tube from the vehicle tailpipe(s), and drive the vehicle from dynamometer.

* * * * *

■ 24. Section 86.161–00 is amended by revising paragraph (b)(1) to read as follows:

**§ 86.161–00 Air conditioning environmental test facility ambient requirements.**

* * * * *

(b) * * *

(1) Ambient humidity is controlled, within the test cell, during all phases of the air conditioning test sequence to an average of 100 +/ − 5 grains of water/pound of dry air.

* * * * *

■ 25. Section 86.164–00 is amended by revising paragraph (c)(1)(i) introductory text to read as follows:

**§ 86.164–00 Supplemental federal test procedure calculations.**

* * * * *

(c)(1) * * *

(i) $Y_{WSFTP} = 0.35(Y_{FTP}) + 0.37(Y_{SC03}) + 0.28(Y_{US06})$

Where:

* * * * *

■ 26. Section 86.410–2006 is amended by adding paragraph (e)(3) to read as follows:

**§ 86.410–2006 Emission standards for 2006 and later model year motorcycles.**

* * * * *

(e) * * *

(3) Small-volume manufacturers are not required to comply with permeation requirements in paragraph (g) of this section until model year 2010.

* * * * *

■ 27. A new § 86.413–2006 is added to read as follows:

**§ 86.413–2006 Labeling.**

(a)(1) The manufacturer of any motorcycle shall, at the time of manufacture, affix a permanent, legible label, of the type and in the manner described in this section, containing the information provided in this section, to all production models of such vehicles available for sale to the public and covered by a certificate of conformity.

(2) A permanent, legible label shall be affixed in a readily accessible position. Multi-part labels may be used.

(3) The label shall be affixed by the vehicle manufacturer who has been issued the certificate of conformity for such vehicle, in such a manner that it cannot be removed without destroying or defacing the label, and shall not be affixed to any part which is easily detached from the vehicle or is likely to be replaced during the useful life of the vehicle.

(4) The label shall contain the following information lettered in the English language in block letters and numerals, which shall be of a color that contrasts with the background of the label:

(i) The label heading shall read: ''Vehicle Emission Control Information'';

(ii) Full corporate name and trademark of the manufacturer;

(iii) Engine displacement (in cubic centimeters or liters) and engine family identification;

(iv) Engine tuneup specifications and adjustments, as recommended by the manufacturer, including, if applicable: idle speed, ignition timing, and the idle air-fuel mixture setting procedure and value (*e.g.,* idle CO, idle air-fuel ratio, idle speed drop). These specifications shall indicate the proper transmission position during tuneup, and which accessories should be in operation and which systems should be disconnected during a tuneup;

(v) Any specific fuel or engine lubricant requirements (*e.g.,* lead content, research octane number, engine lubricant type);

(vi) Identification of the exhaust emission control system, using abbreviations in accordance with SAE J1930, June 1993, including the following abbreviations for items commonly appearing on motorcycles:

OC Oxidation catalyst;
TWC Three-way catalyst;
AIR Secondary air injection (pump);
PAIR Pulsed secondary air injection;
DFI Direct fuel injection;
O2S Oxygen sensor;
HO2S Heated oxygen sensor;
EM Engine modification;
CFI Continuous fuel injection;
MFI Multi-port (electronic) fuel injection; and
TBI Throttle body (electronic) fuel injection.

(viii) An unconditional statement of conformity to U.S. EPA regulations which includes the model year; for example, ''This Vehicle Conforms to U.S. EPA Regulations Applicable to____Model Year New Motorcycles'' (the blank is to be filled in with the appropriate model year). For all Class III motorcycles and for Class I and Class II motorcycles demonstrating compliance with the averaging provisions in 40 CFR 86.449 the statement must also include the phrase ''is certified to an $HC+NO_X$ emission standard of __ grams/kilometer'' (the blank is to be filled in with the Family Emission Limit determined by the manufacturer).

(b) The provisions of this section shall not prevent a manufacturer from also reciting on the label that such vehicle conforms to any other applicable Federal or State standards for new motorcycles or any other information that such manufacturer deems necessary for, or useful to, the proper operation and satisfactory maintenance of the vehicle.

■ 28. Section 86.447–2006 is revised to read as follows:

**§ 86.447–2006 What provisions apply to motorcycle engines below 50 cc that are certified under the Small SI program or the Recreational-vehicle program?**

(a) *General provisions.* If you are an engine manufacturer, this section allows you to introduce into commerce a new highway motorcycle (that is, a motorcycle that is a motor vehicle) if it has an engine below 50 cc that is already certified to the requirements that apply to engines or vehicles under 40 CFR part 90 or 1051 for the appropriate model year. If you comply with all the provisions of this section, we consider the certificate issued under 40 CFR part 90 or 1051 for each engine or vehicle to also be a valid certificate of conformity under this part 86 for its model year, without a separate application for certification under the requirements of this part 86. See § 86.448–2006 for similar provisions that apply to vehicles that are certified to chassis-based standards under 40CFR part 1051.

(b) *Vehicle-manufacturer provisions.* If you are not an engine manufacturer, you may produce highway motorcycles using nonroad engines below 50 cc under this section as long as you meet all the requirements and conditions specified in paragraph (d) of this section. If you modify the nonroad engine in any of the ways described in paragraph (d)(2) of this section for installation in a highway motorcycle, we will consider you a manufacturer of a new highway motorcycle. Such engine modifications prevent you from using the provisions of this section.

(c) *Liability.* Engines for which you meet the requirements of this section, and vehicles containing these engines, are exempt from all the requirements and prohibitions of this part, except for those specified in this section. Engines and vehicles exempted under this section must meet all the applicable requirements from 40 CFR part 90 or 1051. This applies to engine manufacturers, vehicle manufacturers who use these engines, and all other persons as if these engines were used in recreational vehicles or other nonroad applications. The prohibited acts of 42 U.S.C. 7522 apply to these new highway motorcycles; however, we consider the certificate issued under 40 CFR part 90 or 1051 for each engine to also be a valid certificate of conformity under this part 86 for its model year. If we make a determination that these engines do not conform to the regulations during their useful life, we may require you to recall them under 40 CFR part 86, 90, or 1068.

(d) *Specific requirements.* If you are an engine or vehicle manufacturer and meet all the following criteria and requirements regarding your new engine or vehicle, the highway motorcycle is eligible for an exemption under this section:

(1) Your engine must be below 50 cc and must be covered by a valid certificate of conformity for Class II engines issued under 40 CFR part 90 or for recreational vehicles under 40 CFR part 1051.

(2) You must not make any changes to the certified engine that could reasonably be expected to increase its exhaust emissions for any pollutant, or its evaporative emissions, if applicable. For example, if you make any of the following changes to one of these engines, you do not qualify for this exemption:

(i) Change any fuel system or evaporative system parameters from the certified configuration.

(ii) Change, remove, or fail to properly install any other component, element of design, or calibration specified in the engine manufacturer's application for certification. This includes aftertreatment devices and all related components.

(iii) Modify or design the engine cooling system so that temperatures or heat rejection rates are outside the original engine manufacturer's specified ranges.

(3) You must show that fewer than 50 percent of the engine family's total sales in the United States are used in highway motorcycles. This includes engines used in any application, without regard to which company manufactures the vehicle or equipment. In addition, if you manufacture highway motorcycles, you must show that fewer than 50 percent of the engine family's total sales in the United States are highway motorcycles. Show that you meet the engine-sales criterion as follows:

(i) If you are the original manufacturer of the engine, base this showing on your sales information.

(ii) In all other cases, you must get the original manufacturer of the engine to confirm the engine sales volumes based on its sales information.

(4) You must ensure that the engine has the label we require under 40 CFR part 90 or 1051.

(5) You must add a permanent supplemental label to the engine in a position where it will remain clearly visible after installation in the vehicle. In the supplemental label, do the following:

(i) Include the heading: ''HIGHWAY MOTORCYCLE ENGINE EMISSION CONTROL INFORMATION''.

(ii) Include your full corporate name and trademark. You may instead include the full corporate name and trademark of another company you choose to designate.

(iii) State: ''THIS ENGINE WAS ADAPTED FOR HIGHWAY USE WITHOUTAFFECTING ITS EMISSION CONTROLS.''.

(iv) State the date you finished installation (month and year), if applicable.

(6) Send the Designated Compliance Officer a signed letter by the end of each calendar year (or less often if we tell you) with all the following information:

(i) Identify your full corporate name, address, and telephone number.

(ii) List the engine or vehicle models you expect to produce under this exemption in the coming year.

(iii) State: ''We produce each listed [engine or vehicle] model for without making any changes that could increase its certified emission levels, as described in 40 CFR 86.447–2006.''.

(e) *Failure to comply.* If your highway motorcycles do not meet the criteria listed in paragraph (d) of this section, they will be subject to the standards,

requirements, and prohibitions of this part 86 and the certificate issued under 40 CFR part 90 or 1051 will not be deemed to also be a certificate issued under this part 86. Introducing these engines into commerce without a valid exemption or certificate of conformity under this part violates the prohibitions in 40 CFR part 85.

(f) *Data submission.* We may require you to send us emission test data on any applicable nonroad duty cycles.

(g) *Participation in averaging, banking and trading.* Engines or vehicles adapted for recreational use under this section may not generate or use emission credits under this part 86. These engines or vehicles may generate credits under the ABT provisions in 40 CFR part 90 or 1051. These engines or vehicles must use emission credits under 40 CFR part 90 or 1051 if they are certified to an FEL that exceeds an applicable standard.

■ 29. Section 86.448–2006 is revised to read as follows:

**§ 86.448–2006 What provisions apply to vehicles certified under the Recreational-vehicle program?**

(a) *General provisions.* If you are a highway-motorcycle manufacturer, this section allows you to introduce into commerce a new highway motorcycle with an engine below 50 cc if it is already certified to the requirements that apply to recreational vehicles under 40 CFR parts 1051. A highway motorcycle is a motorcycle that is a motor vehicle. If you comply with all of the provisions of this section, we consider the certificate issued under 40 CFR part 1051 for each recreational vehicle to also be a valid certificate of conformity for the motor vehicle under this part 86 for its model year, without a separate application for certification under the requirements of this part 86. See § 86.447–2006 for similar provisions that apply to nonroad engines produced for highway motorcycles.

(b) *Nonrecreational-vehicle provisions.* If you are not a recreational-vehicle manufacturer, you may produce highway motorcycles from recreational vehicles with engines below 50 cc under this section as long as you meet all the requirements and conditions specified in paragraph (d) of this section. If you modify the recreational vehicle or its engine in any of the ways described in paragraph (d)(2) of this section for installation in a highway motorcycle, we will consider you a manufacturer of a new highway motorcycle. Such modifications prevent you from using the provisions of this section.

(c) *Liability.* Vehicles for which you meet the requirements of this section are exempt from all the requirements and prohibitions of this part, except for those specified in this section. Engines and vehicles exempted under this section must meet all the applicable requirements from 40 CFR part 1051. This applies to engine manufacturers, vehicle manufacturers, and all other persons as if the highway motorcycles were recreational vehicles. The prohibited acts of 42 U.S.C. 7522 apply to these new highway motorcycles; however, we consider the certificate issued under 40 CFR part 1051 for each recreational vehicle to also be a valid certificate of conformity for the highway motorcycle under this part 86 for its model year. If we make a determination that these engines or vehicles do not conform to the regulations during their useful life, we may require you to recall them under 40 CFR part 86 or 40 CFR 1068.505.

(d) *Specific requirements.* If you are a recreational-vehicle manufacturer and meet all the following criteria and requirements regarding your new highway motorcycle and its engine, the highway motorcycle is eligible for an exemption under this section:

(1) Your motorcycle must have an engine below 50 cc and it must be covered by a valid certificate of conformity as a recreational vehicle issued under 40 CFR part 1051.

(2) You must not make any changes to the certified recreational vehicle that we could reasonably expect to increase its exhaust emissions for any pollutant, or its evaporative emissions if it is subject to evaporative-emission standards. For example, if you make any of the following changes, you do not qualify for this exemption:

(i) Change any fuel system parameters from the certified configuration.

(ii) Change, remove, or fail to properly install any other component, element of design, or calibration specified in the vehicle manufacturer's application for certification. This includes aftertreatment devices and all related components.

(iii) Modify or design the engine cooling system so that temperatures or heat rejection rates are outside the original vehicle manufacturer's specified ranges.

(3) You must show that fewer than 50 percent of the engine family's total sales in the United States are used in highway motorcycles. This includes highway and off-highway motorcycles, without regard to which company completes the manufacturing of the highway motorcycle. Show this as follows:

(i) If you are the original manufacturer of the vehicle, base this showing on your sales information.

(ii) In all other cases, you must get the original manufacturer of the vehicle to confirm this based on their sales information.

(4) The highway motorcycle must have the vehicle emission control information we require under 40 CFR part 1051.

(5) You must add a permanent supplemental label to the highway motorcycle in a position where it will remain clearly visible. In the supplemental label, do the following:

(i) Include the heading: ''HIGHWAY MOTORCYCLE ENGINE EMISSION CONTROL INFORMATION''.

(ii) Include your full corporate name and trademark. You may instead include the full corporate name and trademark of another company you choose to designate.

(iii) State: ''THIS VEHICLE WAS ADAPTED FOR HIGHWAY USE WITHOUT AFFECTING ITS EMISSION CONTROLS.''.

(iv) State the date you finished modifying the vehicle (month and year), if applicable.

(6) Send the Designated Compliance Officer a signed letter by the end of each calendar year (or less often if we tell you) with all the following information:

(i) Identify your full corporate name, address, and telephone number.

(ii) List the highway motorcycle models you expect to produce under this exemption in the coming year.

(iii) State: ''We produced each listed highway motorcycle without making any changes that could increase its certified emission levels, as described in 40 CFR 86.448–2006.''.

(e) *Failure to comply.* If your highway motorcycles do not meet the criteria listed in paragraph (d) of this section, they will be subject to the standards, requirements, and prohibitions of this part 86 and 40 CFR part 85, and the certificate issued under 40 CFR part 1051 will not be deemed to also be a certificate issued under this part 86. Introducing these motorcycles into commerce without a valid exemption or certificate of conformity under this part violates the prohibitions in 40 CFR part 85.

(f) *Data submission.* We may require you to send us emission test data on the duty cycle for Class I motorcycles.

(g) *Participation in averaging, banking and trading.* Recreational vehicles adapted for use as highway motorcycles under this section may not generate or use emission credits under this part 86. These engines may generate credits under the ABT provisions in 40 CFR part 1051. These engines must use emission credits under 40 CFR part

1051 if they are certified to an FEL that exceeds an applicable standard.

■ 30. In § 86.513–2004, Table 1 in paragraph (a)(1) is revised to read as follows:

**§ 86.513–2004 Fuel and engine lubricant specifications.**

* * * * *

(a) * * *

(1) * * *

TABLE 1 OF § 86.513–2004—GASOLINE TEST FUEL SPECIFICATIONS

| Item | Procedure | Value |
|---|---|---|
| **Distillation Range:** | | |
| 1. Initial boiling point, °C | ASTM D 86–97 | 23.9—35.0 [1] |
| 2. 10% point, °C | ASTM D 86–97 | 48.9—57.2 |
| 3. 50% point, °C | ASTM D 86–97 | 93.3—110.0 |
| 4. 90% point, °C | ASTM D 86–97 | 148.9—162.8 |
| 5. End point, °C | ASTM D 86–97 | 212.8 |
| **Hydrocarbon composition:** | | |
| 1. Olefins, volume % | ASTM D 1319–98 | 10 maximum |
| 2. Aromatics, volume % | ASTM D 1319–98 | 35 maximum |
| 3. Saturates | ASTM D 1319–98 | Remainder |
| Lead (organic), g/liter | ASTM D 3237 | 0.013 maximum |
| Phosphorous, g/liter | ASTM D 3231 | 0.0013 maximum |
| Sulfur, weight % | ASTM D 1266 | 0.008 maximum |
| Volatility (Reid Vapor Pressure), kPa | ASTM D 323 | 55.2 to 63.4 [1] |

[1] For testing at altitudes above 1,219 m, the specified volatility range is 52 to 55 kPa and the specified initial boiling point range is (23.9 to 40.6) °C.

* * * * *

■ 31. Section 86.884–8 is amended by revising paragraph (c) introductory text to read as follows:

**§ 86.884–8 Dynamometer and engine equipment.**

* * * * *

(c) An exhaust system with an appropriate type of smokemeter placed no more than 32 feet from the exhaust manifold(s), turbocharger outlet(s), exhaust aftertreatment device(s), or crossover junction (on Vee engines), whichever is farthest downstream. The smoke exhaust system shall present an exhaust backpressure within ±0.2 inch Hg of the upper limit at maximum rated horsepower, as established by the engine manufacturer in his sales and service literature for vehicle application. The following options may also be used:

* * * * *

■ 32. Section 86.884–10 is amended by revising paragraph (a) introductory text to read as follows:

**§ 86.884–10 Information.**

* * * * *

(a) Engine description and specifications. A copy of the information specified in this paragraph must accompany each engine sent to the Administrator for compliance testing. If the engine is submitted to the Administrator for testing under subpart N of this part or 40 CFR part 1065, only the specified information need accompany the engine. The manufacturer need not record the information specified in this paragraph for each test if the information, with the exception of paragraphs (a)(3), (a)(12), and (a)(13) of this section, is included in the manufacturer's part I.

* * * * *

■ 33. Section 86.884–12 is amended by revising paragraph (c)(2) to read as follows:

**§ 86.884–12 Test run.**

* * * * *

(c) * * *

(2) Warm up the engine by the procedure described in 40 CFR 1065.530.

* * * * *

■ 34. Section 86.1005–90 is amended by revising paragraphs (a)(1)(i), (a)(1)(ii), (a)(2)(vi)(A), and (a)(2)(vi)(B) to read as follows:

**§ 86.1005–90 Maintenance of records; submittal of information.**

(a) * * *

(1) * * *

(i) If testing heavy-duty gasoline-fueled or methanol-fueled Otto-cycle engines, the equipment requirements specified in 40 CFR part 1065, subparts B and C;

(ii) If testing heavy-duty petroleum-fueled or methanol-fueled diesel engines, the equipment requirements specified in 40 CFR part 1065, subparts B and C;

* * * * *

(2) * * *

(vi) * * *

(A) If testing gasoline-fueled or methanol-fueled Otto-cycle heavy-duty engines, the record requirements specified in 40 CFR 1065.695;

(B) If testing petroleum-fueled or methanol-fueled diesel heavy-duty engines, the record requirements specified in 40 CFR 1065.695;

* * * * *

■ 35. Section 86.1108–87 is amended by revising paragraphs (a)(1)(i), (a)(1)(ii), (a)(2)(vi)(A), and (a)(2)(vi)(B) to read as follows:

**§ 86.1108–87 Maintenance of records.**

(a) * * *

(1) * * *

(i) If testing heavy-duty gasoline engines, the equipment requirements specified in 40 CFR part 1065, subparts B and C;

(ii) If testing heavy-duty diesel engines, the equipment requirements specified in 40 CFR part 1065, subparts B and C;

* * * * *

(2) * * *

(vi) * * *

(A) If testing heavy-duty gasoline engines, the record requirements specified in 40 CFR 1065.695;

(B) If testing heavy-duty diesel engines, the record requirements specified in 40 CFR 1065.695;

* * * * *

■ 36. A new § 86.1213–08 is added to read as follows:

**§ 86.1213–08 Fuel specifications.**

The test fuels listed in 40 CFR part 1065, subpart H, shall be used for evaporative emission testing.

■ 37. Section 86.1301–90 is redesignated as § 86.1301 and revised to read as follows:

**§ 86.1301 Scope; applicability.**

This subpart specifies gaseous emission test procedures for Otto-cycle and diesel heavy-duty engines, and particulate emission test procedures for diesel heavy-duty engines, as follows:

(a) For model years 1990 through 2003, manufacturers must use the test procedures specified in § 86.1305–90.

(b) For model years 2004 through 2009, manufacturers may use the test procedures specified in § 86.1305–2004 or § 86.1305–2010. For any EPA testing before the 2010 model year, EPA will use the manufacturer's selected procedures for mapping engines, generating duty cycles, and applying cycle-validation criteria. For any other parameters,EPA may conduct testing using either of the specified procedures.

(c) For model years 2010 and later, manufacturers must use the test procedures specified in § 86.1305–2010.

(d) As allowed under subpart A of this part, manufacturers may use carryover data from previous model years to demonstrate compliance with emission standards, without regard to the provisions of this section.

■ 38. Section 86.1304–90 is redesignated as § 86.1304 and amended by revising paragraph (a) to read as follows:

**§ 86.1304 Section numbering; construction.**

(a) *Section numbering*. The model year of initial applicability is indicated by the section number. The digits following the hyphen designate the first model year for which a section is applicable. The section continues to apply to subsequent model years unless a later model year section is adopted. (Example: § 86.13xx–2004 applies to the 2004 and subsequent model years. If a § 86.13xx–2007 is promulgated it would apply beginning with the 2007 model year; § 86.13xx–2004 would apply to model years 2004 through 2006.)

* * * * *

■ 39. A new § 86.1305–2010 is added to read as follows:

**§ 86.1305–2010 Introduction; structure of subpart.**

(a) This subpart specifies the equipment and procedures for performing exhaust-emission tests on Otto-cycle and diesel-cycle heavy-duty engines. Subpart A of this part sets forth the emission standards and general testing requirements to comply with EPA certification procedures.

(b) Use the applicable equipment and procedures for spark-ignition or compression-ignition engines in 40 CFR part 1065 to determine whether engines meet the duty-cycle emission standards in subpart A of this part. Measure the emissions of all regulated pollutants as specified in 40 CFR part 1065. Use the duty cycles and procedures specified in § 86.1333–2007, § 86.1360–2007, and § 86.1362–2007. Adjust emission results from engines using aftertreatment technology with infrequent regeneration events as described in § 86.004–28.

(c) The provisions in § 86.1370–2007 and § 86.1372–2007 apply for determining whether an engine meets the applicable not-to-exceed emission standards.

(d) Measure smoke using the procedures in subpart I of this part for evaluating whether engines meet the smoke standards in subpart A of this part.

(e) Use the fuels specified in 40 CFR part 1065 to perform valid tests, as follows:

(1) For service accumulation, use the test fuel or any commercially available fuel that is representative of the fuel that in-use engines will use.

(2) For diesel-fueled engines, use the ultra low-sulfur diesel fuel specified in 40 CFR part 1065 for emission testing.

(f) You may use special or alternate procedures to the extent we allow them under 40 CFR 1065.10.

(g) This subpart applies to you as a manufacturer, and to anyone who does testing for you.

■ 40. Section 86.1321–90 is amended by revising paragraph (a)(3)(ii) to read as follows:

**§ 86.1321–90 Hydrocarbon analyzer calibration.**

* * * * *

(a) * * *

(3) * * *

(ii) The HFID optimization procedures outlined in § 86.331–79(c).

* * * * *

■ 41. Section 86.1321–94 is amended by revising paragraph (a)(3)(ii) to read as follows:

**§ 86.1321–94 Hydrocarbon analyzer calibration.**

* * * * *

(a) * * *

(3) * * *

(ii) The procedure listed in § 86.331–79(c).

* * * * *

■ 42. A new § 86.1333–2010 is added to read as follows:

**§ 86.1333–2010 Transient test cycle generation.**

(a) *Generating transient test cycles*. The heavy-duty transient engine cycles for Otto-cycle and diesel engines are listed in Appendix I((f) (1), (2) and (3)) to this part. These second-by-second listings represent torque and rpm maneuvers characteristic of heavy-duty engines. Both rpm and torque are normalized (expressed as a percentage of maximum) in these listings.

(1) To unnormalize rpm, use the following equations:

(i) For diesel engines:

$$\text{Actualrpm} = \frac{\%\text{rpm} \cdot (\text{MaxTestSpeed} - \text{CurbIdleSpeed})}{112} + \text{CurbIdleSpeed}$$

Where:

MaxTestSpeed = the maximum test speed as calculated in 40 CFR part 1065.

(ii) For Otto-cycle engines:

$$\text{Actualrpm} = \frac{\%\text{rpm} \cdot (\text{MaxTestSpeed} - \text{CurbIdleSpeed})}{112} + \text{CurbIdleSpeed}$$

Where:

MaxTestSpeed = the maximum test speed as calculated in 40 CFR part 1065.

(2) Torque is normalized to the maximum torque at the rpm listed with it. Therefore, to unnormalize the torque values in the cycle, the maximum torque curve for the engine in question must be used. The generation of the

maximum torque curve is described in 40 CFR part 1065.

(b) *Example of the unnormalization procedure.* Unnormalize the following test point, given Maximum Test speed = 3800 rpm and Curb Idle Speed = 600 rpm.

| PercentRPM | PercentTorque |
|---|---|
| 43 | 82 |

(1) Calculate actual rpm:

$$\text{Actualrpm} = \frac{43 \cdot (3800 - 600)}{112} + 600 = 1{,}829\text{rpm}$$

(2) Determine actual torque: Determine the maximum observed torque at 1829 rpm from the maximum torque curve. Then multiply this value (e.g., 358 ft-lbs) by 0.82. This results in an actual torque of 294 ft-lbs.

(c) *Clutch operation.* Manual transmission engines may be tested with a clutch. If used, the clutch shall be disengaged at all zero percent speeds, zero percent torque points, but may be engaged up to two points preceding a non-zero point, and may be engaged for time segments with zero percent speed and torque points of durations less than four seconds. (See 40 CFR 1065.514 for allowances in the cycle validation criteria.)

■ 43. Section 86.1360–2007 is amended by revising paragraph (b), removing and reserving paragraphs (c) and (e), and removing paragraphs (h) and (i) to read as follows:

**§ 86.1360–2007 Supplemental emission test; test cycle and procedures.**

* * * * *

(b) *Test cycle.* (1) Perform testing as described in § 86.1362–2007 for determining whether an engine meets the applicable standards when measured over the supplemental emission test.

(2) For engines not certified to a $NO_X$ standard or FEL less than 1.5 g/bhp-hr, EPA may select, and require the manufacturer to conduct the test using, up to three discrete test points within the control area defined in paragraph (d) of this section. EPA will notify the manufacturer of these supplemental test points in writing in a timely manner before the test. Emission sampling for these discrete test modes must include all regulated pollutants except particulate matter.

* * * * *

■ 44. A new § 86.1362–2007 is added to read as follows:

**§ 86.1362–2007 Steady-state testing with a ramped-modal cycle.**

This section describes how to test engines under steady-state conditions. Manufacturers may alternatively use the procedures specified in § 86.1363–2007 through the 2009 model year.

(a) Start sampling at the beginning of the first mode and continue sampling until the end of the last mode. Calculate emissions as described in 40 CFR 1065.650 and cycle statistics as described in 40 CFR 1065.514.

(b) Measure emissions by testing the engine on a dynamometer with the following ramped-modal duty cycle to determine whether it meets the applicable steady-state emission standards:

| RMC mode | Time in mode (seconds) | Engine speed[1,2] | Torque (percent)[2,3] |
|---|---|---|---|
| 1a Steady-state | 170 | Warm Idle | 0 |
| 1b Transition | 20 | Linear Transition | Linear Transition |
| 2a Steady-state | 170 | A | 100 |
| 2b Transition | 20 | A | Linear Transition |
| 3a Steady-state | 102 | A | 25 |
| 3b Transition | 20 | A | Linear Transition |
| 4a Steady-state | 100 | A | 75 |
| 4b Transition | 20 | A | Linear Transition |
| 5a Steady-state | 103 | A | 50 |
| 5b Transition | 20 | Linear Transition | Linear Transition |
| 6a Steady-state | 194 | B | 100 |
| 6b Transition | 20 | B | Linear Transition |
| 7a Steady-state | 219 | B | 25 |
| 7b Transition | 20 | B | Linear Transition |
| 8a Steady-state | 220 | B | 75 |
| 8b Transition | 20 | B | Linear Transition |
| 9a Steady-state | 219 | B | 50 |
| 9b Transition | 20 | Linear Transition | Linear Transition |
| 10a Steady-state | 171 | C | 100 |
| 10b Transition | 20 | C | Linear Transition |
| 11a Steady-state | 102 | C | 25 |
| 11b Transition | 20 | C | Linear Transition |
| 12a Steady-state | 100 | C | 75 |
| 12b Transition | 20 | C | Linear Transition |
| 13a Steady-state | 102 | C | 50 |
| 13b Transition | 20 | Linear Transition | Linear Transition |
| 14 Steady-state | 168 | Warm Idle | 0 |

[1] Speed terms are defined in 40 CFR part 1065.

[2] Advance from one mode to the next within a 20-second transition phase. During the transition phase, command a linear progression from the speed or torque setting of the current mode to the speed or torque setting of the next mode.

[3] The percent torque is relative to maximum torque at the commanded engine speed.

(c) During idle mode, operate the engine with the following parameters:

(1) Hold the speed within your specifications.

(2) Set the engine to operate at its minimum fueling rate.

(3) Keep engine torque under 5 percent of maximum test torque.

(d) For full-load operating modes, operate the engine at its maximum fueling rate.

(e) See 40 CFR part 1065 for detailed specifications of tolerances and calculations.

(f) Perform the ramped-modal test with a warmed-up engine. If the ramped-modal test follows directly after testing over the Federal Test Procedure, consider the engine warm. Otherwise, operate the engine to warm it up as described in 40 CFR part 1065, subpart F.

■ 45. A new § 86.1363–2007 is added to read as follows:

**§ 86.1363–2007 Steady-state testing with a discrete-mode cycle.**

This section describes an alternate procedure for steady-state testing that manufacturers may use through the 2009 model year.

(a) Use the following 13-mode cycle in dynamometer operation on the test engine:

| Mode number | Engine speed [1] | Percent load [2] | Weighting factors | Mode length (minutes) [3] |
|---|---|---|---|---|
| 1 | Idle | ..... | 0.15 | 4 |
| 2 | A | 100 | 0.08 | 2 |
| 3 | B | 50 | 0.10 | 2 |
| 4 | B | 75 | 0.10 | 2 |
| 5 | A | 50 | 0.05 | 2 |
| 6 | A | 75 | 0.05 | 2 |
| 7 | A | 25 | 0.05 | 2 |
| 8 | B | 100 | 0.09 | 2 |
| 9 | B | 25 | 0.10 | 2 |
| 10 | C | 100 | 0.08 | 2 |
| 11 | C | 25 | 0.05 | 2 |
| 12 | C | 75 | 0.05 | 2 |
| 13 | C | 50 | 0.05 | 2 |

[1] Speed terms are defined in 40 CFR part 1065.
[2] The percent torque is relative to the maximum torque at the commanded test speed.
[3] The percent torque is relative to maximum torque at the commanded engine speed.

(b) Prior to beginning the test sequence, the engine must be warmed-up according to the procedures in § 86.1332–90(d)(3)(i) through (iv).

(c) The test must be performed in the order of the mode numbers in paragraph (a) of this section. Where applicable, the EPA-selected test points identified under § 86.1360–2007(b)(2) must be performed immediately upon completion of mode 13. The engine must be operated for the prescribed time in each mode, completing engine speed and load changes in the first 20 seconds of each mode. The specified speed must be held to within±50 rpm and the specified torque must be held to within plus or minus two percent of the maximum torque at the test speed.

(d) One filter shall be used for sampling PM over the 13-mode test procedure. The modal weighting factors specified in paragraph (a) of this section shall be taken into account by taking a sample proportional to the exhaust mass flow during each individual mode of the cycle. This can be achieved by adjusting sample flow rate, sampling time, and/or dilution ratio, accordingly, so that the criterion for the effective weighting factors is met. The sampling time per mode must be at least 4 seconds per 0.01 weighting factor. Sampling must be conducted as late as possible within each mode. Particulate sampling shall be completed no earlier than 5 seconds before the end of each mode.

(e) The test must be conducted with all emission-related engine control variables in the highest brake-specific $NO_X$ emissions state which could be encountered for a 30 second or longer averaging period at the given test point and for the conditions under which the engine is being tested.

(f) Manufacturers must follow the exhaust emissions sample analysis procedures under § 86.1340, and the calculation formulas and procedures under § 86.1342, for the 13-mode cycle and the 3 EPA-selected test points as applicable for steady-state testing, including the $NO_X$ correction factor for humidity.

(g) Calculate the weighted average emissions as follows:

(1) For each regulated gaseous pollutant, calculate the weighted average emissions using the following equation:

$$A_{WA} = 1 - \frac{\sum_{i=1}^{N}\left[A_{Mi} \cdot WF_i\right]}{\sum_{i=2}^{N}\left[A_{Pi} - WF_i\right]}$$

Where:

$A_{WA}$ = Weighted average emissions for each regulated gaseous pollutant, in grams per brake horse-power hour.

$A_M$ = Modal average mass emissions level, in grams per hour. Mass emissions must be calculated as described in § 86.1342.

$A_P$ = Modal average power, in brake horse-power. Any power measured during the idle mode (mode 1) is not included in this calculation.

$W_F$ = Weighting factor corresponding to each mode of the steady-state test cycle, as defined in paragraph (a) of this section.

i = The modes of the steady-state test cycle defined in paragraph (a) of this section.

n = 13, corresponding to the 13 modes of the steady-state test cycle defined in paragraph (a) of this section.

(2) For PM measurements, a single filter must be used to measure PM over the 13 modes. The brake-specific PM emission level for the test must be calculated as described for a transient hot start test in § 86.1343. Only the power measured during the sampling period shall be used in the calculation.

(h) The test fuel used for supplemental steady-state testing under this section must meet the requirements of § 86.1313.

(i) Ambient conditions, charge cooling specifications, and intake and exhaust restrictions for supplemental steady-state testing and maximum allowable emission limit testing under this section must meet the requirements of § 86.1330.

■ 46. Section 86.1370–2007 is amended by revising paragraph (a) to read as follows:

**§ 86.1370–2007 Not-To-Exceed test procedures.**

(a) *General.* The purpose of this test procedure is to measure in-use emissions of heavy-duty diesel engines while operating within a broad range of speed and load points (the Not-To-Exceed Control Area) and under conditions which can reasonably be expected to be encountered in normal vehicle operation and use. Emission results from this test procedure are to be compared to the Not-To-Exceed Limits specified in § 86.007–11(a)(4), or to later Not-To-Exceed Limits. The Not-To-Exceed Limits do not apply for engine-starting conditions. Tests conducted using the procedures specified in § 86.1301 are considered valid Not-To-Exceed tests (**Note:** duty cycles and limits on ambient conditions do not apply for Not-To-Exceed tests).

■ 47. Section 86.1509–84 is amended by revising paragraphs (c) and (d) to read as follows:

**§ 86.1509–84 Exhaust gas sampling system.**

* * * * *

(c) A CVS sampling system with bag or continuous analysis as specified in 40 CFR part 1065 is permitted as applicable. The inclusion of an additional raw carbon dioxide ($CO_2$) analyzer as specified in 40 CFR part 1065 is required if the CVS system is used, in order to accurately determine the CVS dilution factor. The heated sample line specified in 40CFR part 1065 for raw emission requirements is not required for the raw ($CO_2$) measurement.

(d) A raw exhaust sampling system as specified in 40 CFR part 1065 is permitted.

■ 48. Section 86.1511–84 is amended by revising paragraphs (a)(1) and (b) to read as follows:

**§ 86.1511–84 Exhaust gas analysis system.**

(a) * * *

(1) The analyzer used shall conform to the accuracy provisions of 40 CFR part 1065, subparts C, D, and F.

* * * * *

(b) The inclusion of a raw $CO_2$ analyzer as specified in 40 CFR part 1065 is required in order to accurately determine the CVS dilution factor.

■ 49. Section 86.1513–90 is revised to read as follows:

**§ 86.1513–90 Fuel specifications.**

The requirements of this section are set forth in § 86.1313–94 for heavy-duty engines, and in § 86.113–90(a) for light-duty trucks.

■ 50. Section 86.1513–94 is revised to read as follows:

**§ 86.1513–94 Fuel specifications.**

The requirements of this section are set forth in 40 CFR part 1065, subpart H, for heavy-duty engines and in § 86.113–94 for light-duty trucks.

■ 51. Section 86.1514–84 is amended by revising paragraphs (b) and (c) to read as follows:

**§ 86.1514–84 Analytical gases.**

* * * * *

(b) If the raw CO sampling system specified in 40 CFR part 1065 is used, the analytical gases specified in 40 CFR part 1065, subpart H, shall be used.

(c) If a CVS sampling system is used, the analytical gases specified in 40 CFR part 1065, subpart H, shall be used.

■ 52. Section 86.1519–84 is revised to read as follows:

**§ 86.1519–84 CVS calibration.**

If the CVS system is used for sampling during the idle emission test, the calibration instructions are specified in 40 CFR part 1065, subpart D, for heavy-duty engines, and § 86.119–78 for light-duty trucks.

■ 53. Section 86.1524–84 is revised to read as follows:

**§ 86.1524–84 Carbon dioxide analyzer calibration.**

(a) The calibration requirements for the dilute-sample $CO_2$ analyzer are specified in 40 CFR part 1065, subpart D, for heavy-duty engines and § 86.124–78 for light-duty trucks.

(b) The calibration requirements for the raw $CO_2$ analyzer are specified in 40 CFR part 1065, subpart D.

■ 54. Section 86.1530–84 is amended by revising paragraph (b) to read as follows:

**§ 86.1530–84 Test sequence; general requirements.**

* * * * *

(b) Ambient test cell conditions during the test shall be those specified in § 86.130–78 or 40 CFR part 1065, subpart F.

■ 55. Section 86.1537–84 is amended by revising paragraphs (c), (e)(6), and (f) to read as follows:

**§ 86.1537–84 Idle test run.**

* * * * *

(c) Achieve normal engine operating condition. The transient engine or chassis dynamometer test is an acceptable technique for warm-up to normal operating condition for the idle test. If the emission test is not performed prior to the idle emission test, a heavy-duty engine may be warmed up according to 40 CFR part 1065, subpart F. A light-duty truck may be warmed up by operation through one Urban Dynamometer Driving Schedule test procedure (see § 86.115–78 and appendix I to this part).

* * * * *

(e) * * *

(6) For bag sampling, sample idle emissions long enough to obtain a sufficient bag sample, but in no case shorter than 60 seconds nor longer than 6 minutes. Follow the sampling and exhaust measurements requirements of 40 CFR part 1065, subpart F, for conducting the raw $CO_2$ measurement.

* * * * *

(f) If the raw exhaust sampling and analysis technique specified in 40 CFR part 1065 is used, the following procedures apply:

(1) Warm up the engine or vehicle per paragraphs (c) and (d) of this section. Operate the engine or vehicle at the conditions specified in paragraph (e)(4) of this section.

(2) Follow the sampling and exhaust measurement requirements of 40 CFR part 1065, subpart F. The idle sample shall be taken for 60 seconds minimum, and no more than 64 seconds. The chart reading procedures of 40 CFR part 1065, subpart F, shall be used to determine the analyzer response.

* * * * *

■ 56. Section 86.1540–84 is amended by revising paragraphs (b) and (c) to read as follows:

**§ 86.1540–84 Idle exhaust sample analysis.**

* * * * *

(b) If the CVS sampling system is used, the analysis procedures for dilute CO and $CO_2$ specified in 40 CFR part 1065 apply. Follow the raw $CO_2$ analysis procedure specified in 40 CFR part 1065, subpart F, for the raw $CO_2$ analyzer.

(c) If the continuous raw exhaust sampling technique specified in 40 CFR part 1065 is used, the analysis procedures for CO specified in 40 CFR part 1065, subpart F, apply.

■ 57. Section 86.1542–84 is amended by revising paragraph (a) introductory text to read as follows:

**§ 86.1542–84 Information required.**

(a) *General data—heavy-duty engines.* Information shall be recorded for each idle emission test as specified in 40 CFR part 1065, subpart G. The following test data are required:

* * * * *

■ 58. Section 86.1544–84 is amended by revising paragraphs (b)(1), (b)(2), and (c) to read as follows:

**§ 86.1544–84 Calculation; idle exhaust emissions.**

* * * * *

(b) * * *

(1) Use the procedures, as applicable, in 40 CFR 1065.650 to determine the dilute wet-basis CO and $CO_2$ in percent.

(2) Use the procedure, as applicable, in 40 CFR 1065.650 to determine the raw dry-basis $CO_2$ in percent.

* * * * *

(c) If the raw exhaust sampling and analysis system specified in 40 CFR part 1065 is used, the percent for carbon monoxide on a dry basis shall be calculated using the procedure, as applicable, in 40 CFR 1065.650.

* * * * *

■ 59. Section 86.1708–99 is amended by revising Tables R99–5 and R99–6 to read as follows:

**§ 86.1708–99 Exhaust emission standards for 1999 and later light-duty vehicles.**

* * * * *

(c) * * *

(2) * * *

TABLE R99–5.—INTERMEDIATE USEFUL LIFE (50,000 MILE) IN-USE STANDARDS (G/MI) FOR LIGHT-DUTY VEHICLES

| Vehicle emission category | Model year | NMOG | CO | $NO_X$ | HCHO |
|---|---|---|---|---|---|
| LEV | 1999 | 0.100 | 3.4 | 0.3 | 0.015 |
| ULEV | 1999–2002 | 0.055 | 2.1 | 0.3 | 0.008 |

TABLE R99–6.—FULL USEFUL LIFE (100,000 MILE) IN-USE STANDARDS (G/MI) FOR LIGHT-DUTY VEHICLES

| Vehicle emission category | Model year | NMOG | CO | $NO_X$ | HCHO |
|---|---|---|---|---|---|
| LEV | 1999 | 0.125 | 4.2 | 0.4 | 0.018 |
| ULEV | 1999–2002 | 0.075 | 3.4 | 0.4 | 0.011 |

* * * * *

■ 60. Section 86.1709–99 is amended by revising paragraph (c)(1) introductory text and by revising Table R99–14.2, to read as follows:

**§ 86.1709–99 Exhaust emission standards for 1999 and later light light-duty trucks.**

* * * * *

(c) * * *

(1) 1999 model year light light-duty trucks certified as LEVs and 1999 through 2002 model year light light-duty trucks certified as ULEVs shall meet the applicable intermediate and full useful life in-use standards in paragraph (c)(2) of this section, according to the following provisions:

* * * * *

(e) * * *

(2) * * *

TABLE R99–14.2.—SFTP EXHAUST EMISSION STANDARDS (G/MI) FOR LEVS AND ULEVS

| | US06 Test | | A/C Test | |
|---|---|---|---|---|
| Loaded vehicle weight (lbs) | MNHC + $NO_X$ | CO | NMHC + $NO_X$ | CO |
| 0–3750 | 0.14 | 8.0 | 0.20 | 2.7 |
| 3751–5750 | 0.25 | 10.5 | 0.27 | 3.5 |

* * * * *

■ 61. Section 86.1710–99 is amended by revising paragraph (c)(8) introductory text to read as follows:

**§ 86.1710–99 Fleet average non-methane organic gas exhaust emission standards for light-duty vehicles and light light-duty trucks.**

* * * * *

(c) * * *

(8) Manufacturers may earn and bank credits in the NTR for model years 1997 and 1998. In states without a Section 177 Program effective in model year 1997 or 1998, such credits will be calculated as set forth in paragraphs (a) and (b) of this section, except that the applicable fleet average NMOG standard shall be 0.25 g/mi NMOG for the averaging set for light light-duty trucks from 0–3750 lbs LVW and light-duty vehicles or 0.32 g/mi NMOG for the averaging set for light light-duty trucks from 3751–5750 lbs LVW. In states that opt into National LEV and have a Section 177Program effective in model year 1997 or 1998, such credits will equal the unused credits earned in those states.

* * * * *

■ 62. Section 86.1711–99 is amended by revising the section heading and paragraph (a) to read as follows:

**§ 86.1711–99 Limitations on sale of Tier 1 vehicles and TLEVs.**

(a) In the 2001 and subsequent model years, manufacturers may sell Tier 1 vehicles and TLEVs in the NTR only if vehicles with the same engine families are certified and offered for sale in California in the same model year, except as provided under § 86.1707(d)(4).

* * * * *

■ 63. Section 86.1807–07 is amended by revising paragraph (h) to read as follows:

**§ 86.1807–07 Vehicle labeling.**

* * * * *

(h) Vehicles powered by model year 2007 and later diesel-fueled engines and other diesel vehicles certified using a test fuel with 15 ppm sulfur or less, must include permanent readily visible labels on the dashboard (or instrument panel) and near all fuel inlets that state ''Use Ultra Low Sulfur Diesel Fuel Only'' or ''Ultra Low Sulfur Diesel Fuel Only''.

■ 64. Section 86.1808–01 is amended by revising paragraph (f)(19)(iii) to read as follows:

**§ 86.1808–01 Maintenance instructions.**

* * * * *

(f) * * *

(19) * * *

(iii) Any person who violates a provision of this paragraph (f) shall be subject to a civil penalty of not more than $32,500 per day for each violation. This maximum penalty is shown for calendar year 2004. Maximum penalty limits for later years may be set higher based on the Consumer Price Index, as specified in 40 CFR part 19. In addition, such person shall be liable for all other remedies set forth in Title II of the Clean Air Act, remedies pertaining to provisions of Title II of the Clean Air Act, or other applicable provisions of law.

■ 65. Section 86.1808–07 is amended by revising paragraph (g) to read as follows:

**§ 86.1808–07 Maintenance instructions.**

* * * * *

(g) For each new diesel-fueled Tier 2 vehicle (certified using a test fuel with 15 ppm sulfur or less), the manufacturer shall furnish or cause to be furnished to the purchaser a statement that ''This vehicle must be operated only with ultra low sulfur diesel fuel (that is, diesel fuel meeting EPA specifications for highway diesel fuel, including a 15 ppm sulfur cap).''.

■ 66. Section 86.1811–04 is amended by revising Table S04–2 in paragraph (c)(6) to read as follows:

**§ 86.1811–04 Emission standards for light-duty vehicles, light-duty trucks and medium-duty passenger vehicles.**

* * * * *

(c) * * *

(6) * * *

TABLE S04–2.—TIER 2 AND INTERIM NON-TIER 2 INTERMEDIATE USEFUL LIFE (50,000 MILE) EXHAUST MASS EMISSION STANDARDS (GRAMS PER MILE)

| Bin No. | $NO_X$ | NMOG | CO | HCHO | PM | Notes |
|---|---|---|---|---|---|---|
| 11 | 0.6 | 0.195 | 5.0 | 0.022 | | a c f h |
| 10 | 0.4 | 0.125/0.160 | 3.4/4.4 | 0.015/0.018 | | a b d f g h |
| 9 | 0.2 | 0.075/0.140 | 3.4 | 0.015 | | a b e f g h |
| 8 | 0.14 | 0.100/0.125 | 3.4 | 0.015 | | b f h i |
| 7 | 0.11 | 0.075 | 3.4 | 0.015 | | f h |
| 6 | 0.08 | 0.075 | 3.4 | 0.015 | | f h |
| 5 | 0.05 | 0.075 | 3.4 | 0.015 | | f h |

**Notes:**

[a] This bin deleted at end of 2006 model year (end of 2008 model year for HLDTs and MDPVs ).
[b] Higher NMOG, CO and HCHO values apply for HLDTs and MDPVs only.
[c] This bin is only for MDPVs.
[d] Optional NMOG standard of 0.195 g/mi applies for qualifying LDT4s and qualifying MDPVs only.
[e] Optional NMOG standard of 0.100 g/mi applies for qualifying LDT2s only.
[f] The full useful life PM standards from Table S04–1 also apply at intermediate useful life.
[g] Intermediate life standards of this bin are optional for diesels.
[h] Intermediate life standards are optional for vehicles certified to a useful life of 150,000 miles.
[i] Higher NMOG standard deleted at end of 2008 model year.

* * * * *

■ 67. Section 86.1816–08 is amended by revising paragraph (j)(2) to read as follows:

**§ 86.1816–08 Emission standards for complete heavy-duty vehicles.**

* * * * *

(j) * * *

(2) The in-use adjustments are:

(i) 0.1 g/mi for $NO_X$.

(ii) 0.100 g/mi NMHC.

(iii) 0.01 g/mi for PM.

■ 68. Section 86.1834–01 is amended by revising paragraph (b)(4) introductory text,(b)(6)(ii) introductory text, and (b)(6)(ii)(D) to read as follows:

**§ 86.1834–01 Allowable maintenance.**

* * * * *

(b) * * *

(4) For diesel-cycle light-duty vehicles and light-duty trucks, emission-related maintenance in addition to, or at shorter intervals than the following will not be accepted as technologically necessary, except as provided in paragraph (b)(7) of this section:

* * * * *

(6) * * *

(ii) All critical emission-related scheduled maintenance must have a reasonable likelihood of being performed in use. The manufacturer shall be required to show the reasonable likelihood of such maintenance being performed in use, and such showing shall be made prior to the performance of the maintenance on the durability data vehicle. Critical emission-related scheduled maintenance items which satisfy one of the following conditions will be accepted as having a reasonable likelihood of the maintenance item being performed in use:

* * * * *

(D) A manufacturer may desire to demonstrate through a survey that a critical maintenance item is likely to be performed without a visible signal on a maintenance item for which there is no prior in-use experience without the signal. To that end, the manufacturer may in a given model year market up to 200 randomly selected vehicles per critical emission-related maintenance item without such visible signals, and monitor the performance of the critical maintenance item by the owners to show compliance with paragraph(b)(6)(ii)(B) of this section. This option is restricted to two consecutive model years and may not be repeated until any previous survey has been completed.

If the critical maintenance involves more than one test group, the sample will be sales weighted to ensure that it is representative of all the groups in question.

* * * * *

■ 69. In Appendix I to Part 86, paragraph (a) is amended by revising the table entries for ''961'' and ''1345'', paragraph (b) is amended by revising the table entries for ''363,'' ''405,'' ''453,'' ''491,'' ''577,'' ''662,'' ''663,'' ''664,'' and ''932'', and paragraph (h) is amended by adding table entries for ''595,'' ''596,'' ''597,'' ''598,'' ''599,'' and ''600'' in numerical order to read as follows:

**Appendix I to Part 86—Urban Dynamometer Schedules**

(a) EPA Urban Dynamometer Driving Schedule for Light-Duty Vehicles and Light-Duty Trucks.

EPA URBAN DYNAMOMETER DRIVING SCHEDULE

[Speed versus Time Sequence]

| Time (sec.) | Speed (m.p.h.) |
|---|---|
| * * * * * | |
| 961 | 5.3 |
| * * * * * | |
| 1345 | 18.3 |
| * * * * * | |

(b) EPA Urban Dynamometer Driving Schedule for Light-Duty Vehicles, Light-Duty Trucks, and Motorcycles with engine displacements equal to or greater than 170 cc (10.4 cu. in.).

SPEED VERSUS TIME SEQUENCE

| Time (seconds) | Speed (kilometers per hour) |
|---|---|
| * * * * * | |
| 363 | 52.8 |
| * * * * * | |
| 405 | 14.8 |
| * * * * * | |
| 453 | 31.9 |
| * * * * * | |
| 491 | 55.5 |
| * * * * * | |
| 577 | 27.4 |
| * * * * * | |
| 662 | 42.0 |
| 663 | 42.2 |
| 664 | 42.2 |
| * * * * * | |
| 932 | 40.2 |
| * * * * * | |

* * * * *

(h) EPA SC03 Driving Schedule for Light-Duty Vehicles and Light-Duty Trucks.

EPA SC03 DRIVING SCHEDULE

[Speed versus Time Sequence]

| Time (sec) | Speed (mph) |
|---|---|
| * * * * * | |
| 595 | 0.0 |
| 596 | 0.0 |
| 597 | 0.0 |
| 598 | 0.0 |
| 599 | 0.0 |
| 600 | 0.0 |

## PART 89—CONTROL OF EMISSIONS FROM NEW AND IN-USE NONROAD COMPRESSION-IGNITION ENGINES

■ 70. The authority citation for part 89 is revised to read as follows:

**Authority:** 42 U.S.C. 7401–7671q.

■ 71. Section 89.1 is amended by revising paragraph (b)(4)(ii) and adding paragraph (c) to read as follows:

### § 89.1 Applicability.

* * * * *

(b) * * *

(4) * * *

(ii) Are exempted from the requirements of 40 CFR part 94 by exemption provisions of 40 CFR part 94 other than those specified in 40 CFR 94.907 or 94.912.

* * * * *

(c) In certain cases, the regulations in this part 89 apply to engines at or above 250 kW that would otherwise be covered by 40 CFR part 1048. See 40 CFR 1048.620 for provisions related to this allowance.

■ 72. Section 89.2 is amended by removing the definitions for ''Marine diesel engine'' and ''Vessel'', revising the definition of ''United States'', and adding definitions for ''Amphibious vehicle'', ''Marine engine'', and ''Marine vessel'' to read as follows:

### § 89.2 Definitions.

* * * * *

*Amphibious vehicle* means a vehicle with wheels or tracks that is designed primarily for operation on land and secondarily for operation in water.

* * * * *

*Marine engine* means a nonroad engine that is installed or intended to be installed on a marine vessel. This includes a portable auxiliary marine engine only if its fueling, cooling, or exhaust system is an integral part of the vessel. There are two kinds of marine engines:

(1) Propulsion marine engine means a marine engine that moves a vessel through the water or directs the vessel's movement.

(2) Auxiliary marine engine means a marine engine not used for propulsion.

*Marine vessel* has the meaning given in 1 U.S.C. 3, except that it does not include amphibious vehicles. The definition in 1 U.S.C. 3 very broadly includes every craft capable of being used as a means of transportation on water.

* * * * *

*United States* means the States, the District of Columbia, the Commonwealth of Puerto Rico, the Commonwealth of the Northern Mariana Islands, Guam, American Samoa, and the U.S. Virgin Islands.

* * * * *

■ 73. Section 89.102 is amended by revising paragraph (d)(1)(i) to read as follows:

### § 89.102 Effective dates, optional inclusion, flexibility for equipment manufacturers.

* * * * *

(d) * * *

(1) * * *

(i) Equipment rated at or above 37 kW. For nonroad equipment and vehicles with engines rated at or above 37 kW, a manufacturer may take any of the actions identified in § 89.1003(a)(1) for a portion of its U.S.-directed production volume of such equipment and vehicles during the seven years immediately following the date on which Tier 2 engine standards first apply to engines used in such equipment and vehicles, provided that the seven-year sum of these portions in each year, as expressed as a percentage for each year, does not exceed 80, and provided that all such equipment and vehicles or equipment contain Tier 1 or Tier 2 engines;

* * * * *

■ 74. Section 89.110 is amended by revising paragraph (b)(2) to read as follows:

### § 89.110 Emission control information label.

* * * * *

(b) * * *

(2) The full corporate name and trademark of the manufacturer; though the label may identify another company and use its trademark instead of the manufacturer's if the provisions of § 89.1009 are met.

* * * * *

■ 75. Section 89.112 is amended by revising paragraph (f)(3) to read as follows:

### § 89.112 Oxides of nitrogen, carbon monoxide, hydrocarbon, and particulate matter exhaust emission standards.

* * * * *

(f) * * *

(3) *Test procedures.* $NO_X$, NMHC, and PM emissions are measured using the procedures set forth in 40 CFR part 1065, in lieu of the procedures set forth in subpartE of this part. CO emissions may be measured using the procedures set forth either in 40 CFR part 1065 or in subpart E of this part. Manufacturers may use an alternate procedure to demonstrate the desired level of emission control if approved in advance by the Administrator. Engines meeting the requirements to qualify as Blue Sky

Series engines must be capable of maintaining a comparable level of emission control when tested using the procedures set forth in paragraph (c) of this section and subpart E of this part. The numerical emission levels measured using the procedures from subpartE of this part may be up to 20 percent higher than those measured using the procedures from 40 CFR part 1065 and still be considered comparable.

* * * * *

■ 76. Section 89.114 is amended by revising paragraph (b)(3) and adding paragraph (b)(4) to read as follows:

**§ 89.114 Special and alternate test procedures.**

* * * * *

(b) * * *

(3) A manufacturer may elect to use the test procedures in 40 CFR part 1065 as an alternate test procedure without advance approval by the Administrator. The manufacturer must identify in its application for certification that the engines were tested using the procedures in 40 CFR part 1065. For any EPA testing with Tier 2 orTier 3 engines, EPA will use the manufacturer's selected procedures for mapping engines, generating duty cycles, and applying cycle-validation criteria. For any other parameters, EPA may conduct testing using either of the specified procedures.

(4) Where we specify mandatory compliance with the procedures of 40 CFR part 1065, such as in § 89.419, manufacturers may elect to use the procedures specified in 40 CFR part 86, subpart N, as an alternate test procedure without advance approval by the Administrator.

■ 77. Section 89.130 is revised to read as follows:

**§ 89.130 Rebuild practices.**

The provisions of 40 CFR 1068.120 apply to rebuilding of engines subject to the requirements of this part 89, except Tier 1 engines rated at or above 37 kW.

■ 78. Section 89.301 is amended by revising paragraph (d) to read as follows:

**§ 89.301 Scope; applicability.**

* * * * *

(d) Additional information about system design, calibration methodologies, and so forth, for raw gas sampling can be found in 40 CFR part 1065. Examples for system design, calibration methodologies, and so forth, for dilute exhaust gas sampling can be found in 40 CFR part 1065.

■ 79. Section 89.319 is amended by revising paragraphs (b)(2)(ii) and (c) introductory text to read as follows:

**§ 89.319 Hydrocarbon analyzer calibration.**

(b) * * *

(2) * * *

(ii) The HFID optimization procedures outlined in 40 CFR part 1065, subpart D.

* * * * *

(c) *Initial and periodic calibration.* Prior to introduction into service, after any maintenance which could alter calibration, and monthly thereafter, the FID or HFID hydrocarbon analyzer shall be calibrated on all normally used instrument ranges using the steps in this paragraph (c). Use the same flow rate and pressures as when analyzing samples. Calibration gases shall be introduced directly at the analyzer, unless the ''overflow'' calibration option of 40 CFR part 1065, subpart F, for the HFID is taken. New calibration curves need not be generated each month if the existing curve can be verified as continuing to meet the requirements of paragraph (c)(3) of this section.

* * * * *

■ 80. Section 89.320 is amended by revising paragraph (d) to read as follows:

**§ 89.320 Carbon monoxide analyzer calibration.**

* * * * *

(d) The initial and periodic interference, system check, and calibration test procedures specified in 40 CFR part 1065 may be used in lieu of the procedures specified in this section.

■ 81. Section 89.321 is amended by revising paragraph (d) to read as follows:

**§ 89.321 Oxides of nitrogen analyzer calibration.**

* * * * *

(d) The initial and periodic interference, system check, and calibration test procedures specified in 40 CFR part 1065 may be used in lieu of the procedures specified in this section.

■ 82. Section 89.322 is amended by revising paragraph (b) to read as follows:

**§ 89.322 Carbon dioxide analyzer calibration.**

* * * * *

(b) The initial and periodic interference, system check, and calibration test procedures specified in 40 CFR part 1065 may be used in lieu of the procedures in this section.

■ 83. Section 89.410 is amended by adding paragraph (e) to read as follows:

**§ 89.410 Engine test cycle.**

* * * * *

(e) Manufacturers may optionally use the ramped-modal duty cycles corresponding to the discrete-mode duty cycles specified in this section, as described in 40 CFR 1039.505.

■ 84. Section 89.419 is amended by revising paragraphs (a) introductory text, (a)(3)(i),(b)(1) introductory text, (b)(2)(i), (b)(2)(v)(B), (b)(4)(ii), and (b)(4)(iii) to read as follows:

**§ 89.419 Dilute gaseous exhaust sampling and analytical system description.**

(a) *General.* The exhaust gas sampling system described in this section is designed to measure the true mass of gaseous emissions in the exhaust of petroleum-fueled nonroad compression-ignition engines. This system utilizes the CVS concept (described in 40CFR part 1065, subparts A and B) of measuring mass emissions of HC, CO, and $CO_2$. A continuously integrated system is required for HC and $NO_X$ measurement and is allowed for all CO and $CO_2$ measurements. The mass of gaseous emissions is determined from the sample concentration and total flow over the test period. As an option, the measurement of total fuel mass consumed over a cycle may be substituted for the exhaust measurement of $CO_2$. General requirements are as follows:

* * * * *

(3) * * *

(i) Bag sampling (see 40 CFR part 1065) and analytical capabilities (see 40 CFR part 1065), as shown in Figure 2 and Figure 3 in appendix A to this subpart; or

* * * * *

(b) * * *

(1) *Exhaust dilution system.* The PDP–CVS shall conform to all of the requirements listed for the exhaust gas PDP–CVS in 40 CFR part 1065. The CFV–CVS shall conform to all the requirements listed for the exhaust gas CFV–CVS in 40 CFR part 1065. In addition, the CVS must conform to the following requirements:

* * * * *

(2) * * *

(i) The continuous HC sample system (as shown in Figure 2 or 3 in appendix A to this subpart) uses an ''overflow'' zero and span system. In this type of system, excess zero or span gas spills out of the probe when zero and span checks of the analyzer are made. The ''overflow'' system may also be used to calibrate the HC analyzer according to 40 CFR part 1065, subpart F, although this is not required.

* * * * *

(v) * * *

(B) Have a wall temperature of 191 °C ±11 °C over its entire length. The temperature of the system shall be demonstrated by profiling the thermal characteristics of the system where possible at initial installation and after

any major maintenance performed on the system. The profiling shall be accomplished using the insertion thermocouple probing technique. The system temperature will be monitored continuously during testing at the locations and temperature described in 40 CFR 1065.145.

* * * * *

(4) * * *

(ii) The continuous $NO_X$, CO, or $CO_2$ sampling and analysis system shall conform to the specifications of 40 CFR 1065.145 with the following exceptions and revisions:

(A) The system components required to be heated by 40 CFR 1065.145 need only be heated to prevent water condensation, the minimum component temperature shall be 55 °C.

(B) The system response shall meet the specifications in 40 CFR part 1065, subpart C.

(C) Alternative $NO_X$ measurement techniques outlined in 40 CFR part 1065, subpart D, are not permitted for $NO_X$ measurement in this subpart.

(D) All analytical gases must conform to the specifications of § 89.312.

(E) Any range on a linear analyzer below 155 ppm must have and use a calibration curve conforming to § 89.310.

(iii) The chart deflections or voltage output of analyzers with non-linear calibration curves shall be converted to concentration values by the calibration curve(s) specified in § 89.313 before flow correction (if used) and subsequent integration takes place.

■ 85. Section 89.421 is amended by revising paragraphs (b) and (c) to read as follows:

**§ 89.421 Exhaust gas analytical system; CVS bag sample.**

* * * * *

(b) *Major component description.* The analytical system, Figure 4 in appendix A to this subpart, consists of a flame ionization detector (FID) (heated for petroleum-fueled compression-ignition engines to 191 °C ±6 °C) for the measurement of hydrocarbons, nondispersive infrared analyzers (NDIR) for the measurement of carbon monoxide and carbon dioxide, and a chemiluminescence detector (CLD) (or HCLD) for the measurement of oxides of nitrogen. The exhaust gas analytical system shall conform to the following requirements:

(1) The CLD (or HCLD) requires that the nitrogen dioxide present in the sample be converted to nitric oxide before analysis. Other types of analyzers may be used if shown to yield equivalent results and if approved in advance by the Administrator.

(2) If CO instruments are used which are essentially free of $CO_2$ and water vapor interference, the use of the conditioning column may be deleted. (See 40 CFR part 1065, subpart D.)

(3) A CO instrument will be considered to be essentially free of $CO_2$ and water vapor interference if its response to a mixture of 3 percent $CO_2$ in N2, which has been bubbled through water at room temperature, produces an equivalent CO response, as measured on the most sensitive CO range, which is less than 1 percent of full scaleCO concentration on ranges above 300 ppm full scale or less than 3 ppm on ranges below 300 ppm full scale. (See 40 CFR part 1065, subpart D.)

(c) *Alternate analytical systems.* Alternate analysis systems meeting the specifications of 40 CFR part 1065, subpart A, may be used for the testing required under this subpart. Heated analyzers may be used in their heated configuration.

* * * * *

■ 86. Section 89.424 is amended by revising the note at the end of paragraph (d)(3) to read as follows:

**§ 89.424 Dilute emission sampling calculations.**

* * * * *

(d) * * *

(3) * * *

(Note: If a CO instrument that meets the criteria specified in 40 CFR part 1065, subpart C, is used without a sample dryer according to 40 CFR 1065.145, $CO_{em}$ must be substituted directly for $CO_e$ and $CO_{dm}$ must be substituted directly for $CO_d$.)

* * * * *

■ 87. Appendix A to Subpart F is amended by revising Table 1 to read as follows:

**Appendix A to Subpart F of Part 89—Sampling Plans for Selective Enforcement Auditing of Nonroad Engines**

TABLE 1.—SAMPLING PLAN CODE LETTER

| Annual engine family sales | Code letter |
|---|---|
| 20–50 | AA [1] |
| 20–99 | A |
| 100–299 | B |
| 300–499 | C |
| 500 or greater | D |

[1] A manufacturer may optionally use either the sampling plan for code letter "AA" or sampling plan for code letter "A" for Selective Enforcement Audits of engine families with annual sales between 20 and 50 engines. Additionally, the manufacturer may switch between these plans during the audit.

* * * * *

■ 88. Section 89.603 is amended by adding paragraph (e) to read as follows:

**§ 89.603 General requirements for importation of nonconforming nonroad engines.**

* * * * *

(e)(1) The applicable emission standards for engines imported by an ICI under this subpart are the emission standards applicable to the Original Production (OP) year of the engine.

(2) Where engine manufacturers have choices in emission standards for one or more pollutants in a given model year, the standard that applies to the ICI is the least stringent standard for that pollutant applicable to the OP year for the appropriate power category.

(3) ICIs may not generate, use or trade emission credits or otherwise participate in any way in the averaging, banking and trading program.

(4) An ICI may import no more than a total of five engines under this part for any given model year, except as allowed by paragraph (e)(5) of this section. For ICIs owned by a parent company, the importation limit includes importation by the parent company and all its subsidiaries.

(5) An ICI may exceed the limit outlined in paragraph (e)(4) of this section, provided that any engines in excess of the limit meet the emission standards and other requirements outlined in the applicable provisions of Part 89 or 1039 of this chapter for the model year in which the engine is modified (instead of the emission standards and other requirements applicable for the OP year of the vehicle/engine).

■ 89. Section 89.611 is amended by revising paragraph (b)(1) to read as follows:

**§ 89.611 Exemptions and exclusions.**

* * * * *

(b) * * *

(1) *Exemption for repairs or alterations.* A person may conditionally import under bond a nonconforming engine solely for purpose of repairs or alterations. The engine may not be operated in the United States other than for the sole purpose of repair or alteration or shipment to the point of repair or alteration and to the port of export. It may not be sold or leased in the United States and is to be exported upon completion of the repairs or alterations.

* * * * *

■ 90. Section 89.612 is amended by revising paragraph (d) to read as follows:

**§ 89.612 Prohibited acts; penalties.**

* * * * *

(d) An importer who violates section 213(d) and section 203 of the Act is subject to the provisions of section 209 of the Act and is also subject to a civil penalty under section 205 of the Act of not more than $32,500 for each nonroad engine subject to the violation.

In addition to the penalty provided in the Act, where applicable, a person or entity who imports an engine under the exemption provisions of § 89.611(b) and, who fails to deliver the nonroad engine to the U.S. Customs Service is liable for liquidated damages in the amount of the bond required by applicable Customs laws and regulations. The maximum penalty value listed in this paragraph (d) is shown for calendar year 2004. Maximum penalty limits for later years may be adjusted based on the Consumer Price Index. The specific regulatory provisions for changing the maximum penalties, published in 40 CFR part 19, reference the applicable U.S. Code citation on which the prohibited action is based.

* * * * *

■ 91. A new § 89.614 is added to subpart G to read as follows:

**§ 89.614 Importation of partially complete engines.**

The provisions of 40 CFR 1068.330 apply for importation of partially complete engines, or engines that will be modified for applications other than those covered by this part 89.

■ 92. A new § 89.913 is added to subpart J to read as follows:

**§ 89.913 What provisions apply to engines certified under the motor-vehicle program?**

You may use the provisions of 40 CFR 1039.605 to introduce new nonroad engines into commerce if they are already certified to the requirements that apply to compression-ignition engines under 40 CFR parts 85 and 86. However, when using the provisions of 40 CFR 1039.605, references to this part 89 or sections in this part shall be used instead of references to 40 CFR part 1039 or sections in that part.

■ 93. A new § 89.914 is added to subpart J to read as follows:

**§ 89.914 What provisions apply to vehicles certified under the motor-vehicle program?**

You may use the provisions of 40 CFR 1039.610 to introduce new nonroad engines or equipment into commerce if the vehicle is already certified to the requirements that apply under 40 CFR parts 85 and 86. However, when using the provisions of 40 CFR 1039.610, references to this part 89 or sections in this part shall be used instead of references to 40 CFR part 1039 or sections in that part.

■ 94. A new § 89.915 is added to subpart J to read as follows:

**§ 89.915 Staged-assembly exemption.**

You may ask us to provide a temporary exemption to allow you to complete production of your engines at different facilities, as long as you maintain control of the engines until they are in their certified configuration. We may require you to take specific steps to ensure that such engines are in their certified configuration before reaching the ultimate purchaser. You may request an exemption under this section in your application for certification, or in a separate submission.

■ 95. Section 89.1003 is amended by removing and reserving paragraphs (b)(5) and (b)(6), redesignating (b)(7)(iv) as (b)(7)(vii), revising paragraphs (a)(3)(iii), (b)(7)(ii), and(b)(7)(iii), and adding paragraphs (b)(7)(iv) and (b)(7)(viii) to read as follows:

**§ 89.1003 Prohibited acts.**

(a) * * *

(3) * * *

(iii) For a person to deviate from the provisions of § 89.130 when rebuilding an engine (or rebuilding a portion of an engine or engine system). Such a deviation violates paragraph (a)(3)(i) of this section.

* * * * *

(b) * * *

(7) * * *

(ii) The engine manufacturer or its agent takes ownership and possession of the engine being replaced or confirms that the engine has been destroyed; and

(iii) If the engine being replaced was not certified to any emission standards under this part, the replacement engine must have a permanent label with your corporate name and trademark and the following language, or similar alternate language approved by the Administrator: THIS ENGINE DOES NOT COMPLY WITH FEDERAL NONROAD OR ON-HIGHWAY EMISSION REQUIREMENTS. SALE OR INSTALLATION OF THIS ENGINE FOR ANY PURPOSE OTHER THAN AS A REPLACEMENT ENGINE FOR AN ENGINE MANUFACTURED PRIOR TO JANUARY 1 [INSERT APPROPRIATE YEAR] IS A VIOLATION OF FEDERAL LAW SUBJECT TO CIVIL PENALTY.

(iv) If the engine being replaced was certified to emission standards less stringent than those in effect when you produce the replacement engine, the replacement engine must have a permanent label with your corporate name and trademark and the following language, or similar alternate language approved by the Administrator: THIS ENGINE COMPLIES WITH U.S. EPA NONROAD EMISSIONREQUIREMENTS FOR [Insert appropriate year reflecting when the Tier 1 or Tier 2 standards for the replaced engine began to apply] ENGINES UNDER 40 CFR 89.1003(b)(7). SELLING OR INSTALLING THIS ENGINE FOR ANY PURPOSE OTHER THAN TO REPLACE A NONROAD ENGINE BUILT BEFORE JANUARY 1, [Insert appropriate year reflecting when the next tier of emission standards began to apply] MAY BE A VIOLATION OF FEDERAL LAW SUBJECT TO CIVIL PENALTY.

* * * * *

(viii) The provisions of this section may not be used to circumvent emission standards that apply to new engines under this part.

■ 96. Section 89.1006 is amended by revising paragraphs (a)(1), (a)(2), (a)(5), and (c)(1) and adding paragraph (a)(6) to read as follows:

**§ 89.1006 Penalties.**

(a) * * *

(1) A person who violates § 89.1003(a)(1), (a)(4), or (a)(6), or a manufacturer or dealer who violates § 89.1003(a)(3)(i), is subject to a civil penalty of not more than $32,500 for each violation.

(2) A person other than a manufacturer or dealer who violates § 89.1003(a)(3)(i) or any person who violates § 89.1003(a)(3)(ii) is subject to a civil penalty of not more than $2,750 for each violation.

* * * * *

(5) A person who violates § 89.1003(a)(2) or (a)(5) is subject to a civil penalty of not more than $32,500 per day of violation.

(6) The maximum penalty values listed in this section are shown for calendar year 2004. Maximum penalty limits for later years may be adjusted based on the Consumer Price Index. The specific regulatory provisions for changing the maximum penalties, published in 40 CFR part 19, reference the applicable U.S. Code citation on which the prohibited action is based.

* * * * *

(c) * * *

(1) Administrative penalty authority. In lieu of commencing a civil action under paragraph (b) of this section, the Administrator may assess any civil penalty prescribed in paragraph (a) of this section, except that the maximum amount of penalty sought against each violator in a penalty assessment proceeding shall not exceed $270,000, unless the Administrator and the Attorney General jointly determine that a matter involving a larger penalty

amount is appropriate for administrative penalty assessment. Any such determination by the Administrator and the Attorney General is not subject to judicial review. Assessment of a civil penalty shall be by an order made on the record after opportunity for a hearing held in accordance with the procedures found at part 22 of this chapter. The Administrator may compromise, or remit, with or without conditions, any administrative penalty which may be imposed under this section.

* * * * *

■ 97. A new § 89.1009 is added to subpart K to read as follows:

**§ 89.1009 What special provisions apply to branded engines?**

A manufacturer identifying the name and trademark of another company on the emission control information label, as provided by § 89.110(b)(2), must comply with the provisions of 40 CFR 1039.640.

## PART 90—CONTROL OF EMISSIONS FROM NONROAD SPARK-IGNITION ENGINES AT OR BELOW 19 KILOWATTS

■ 98. The authority citation for part 90 is revised to read as follows:

**Authority:** 42 U.S.C. 7401—7671q.

■ 99. Section 90.1 is amended by revising paragraphs (b) and (d)(5) and adding text to paragraph (c) to read as follows:

**§ 90.1 Applicability.**

* * * * *

(b) In certain cases, the regulations in this part 90 also apply to new engines with a gross power output above 19 kW that would otherwise be covered by 40 CFR part 1048 or 1051. See 40 CFR 1048.615 or 1051.145(a)(3) for provisions related to this allowance.

(c) In certain cases, the regulations in this part 90 apply to new engines below 50 cc used in motorcycles that are motor vehicles. See 40 CFR 86.447–2006 for provisions related to this allowance.

(d) * * *

(5) Engines certified to meet the requirements of 40 CFR part 1048, subject to the provisions of § 90.913.

* * * * *

■ 100. Section 90.3 is amended by revising the definitions for *Marine engine, Marine vessel,* and *United States* and adding definitions for *Amphibious vehicle, Good engineering judgment,* and *Maximum engine power* in alphabetical order to read as follows:

**§ 90.3 Definitions.**

* * * * *

*Amphibious vehicle* means a vehicle with wheels or tracks that is designed primarily for operation on land and secondarily for operation in water.

* * * * *

*Good engineering judgment* has the meaning given in 40 CFR 1068.30. See 40 CFR 1068.5 for the administrative process we use to evaluate good engineering judgment.

* * * * *

*Marine engine* means a nonroad engine that is installed or intended to be installed on a marine vessel. This includes a portable auxiliary marine engine only if its fueling, cooling, or exhaust system is an integral part of the vessel. There are two kinds of marine engines:

(1) Propulsion marine engine means a marine engine that moves a vessel through the water or directs the vessel's movement.

(2) Auxiliary marine engine means a marine engine not used for propulsion.

*Marine vessel* has the meaning given in 1 U.S.C. 3, except that it does not include amphibious vehicles. The definition in 1 U.S.C. 3 very broadly includes every craft capable of being used as a means of transportation on water.

*Maximum engine power* means the maximum value of gross power at rated speed.

* * * * *

*United States* means the States, the District of Columbia, the Commonwealth of Puerto Rico, the Commonwealth of the Northern Mariana Islands, Guam, American Samoa, and the U.S. Virgin Islands.

* * * * *

■ 101. Section 90.119 is amended by revising paragraph (a)(1)(i) to read as follows:

**§ 90.119 Certification procedure—testing.**

(a) * * *

(1) * * *

(i) Class I and II engines must use the test cycle that is appropriate for their application. Engines that operate only at intermediate speed must use Test Cycle A, which is described in Table 2 of Appendix A to subpart E of this part. Engines that operate only at rated speed must use Test Cycle B, which is described in Table 2 of Appendix A to subpart E of this part. If an engine family includes engines used in both rated-speed and intermediate-speed applications, the manufacturer must select the duty cycle that will result in worst-case emission results for certification. For any testing after certification, the engine must be tested using the most appropriate test cycle based on the engine's installed governor.

* * * * *

■ 102. Section 90.120 is amended by adding and reserving paragraph (b)(3) and adding paragraph (b)(4) to read as follows:

**§ 90.120 Certification procedure—use of special test procedures.**

* * * * *

(b) * * *

(3) [Reserved]

(4) Where we specify mandatory compliance with the procedures of 40 CFR part 1065, manufacturers may elect to use the procedures specified in 40 CFR part 86, subpart N, as an alternate test procedure without advance approval by the Administrator.

* * * * *

■ 103. Section 90.301 is amended by revising paragraphs (c) and (d) to read as follows:

**§ 90.301 Applicability.**

* * * * *

(c) Additional information about system design, calibration methodologies, and so forth, for raw gas sampling can be found in 40 CFR part 1065. Examples for system design, calibration methodologies, and so forth, for dilute exhaust gas sampling can be found in 40 CFR part 1065.

(d) For Phase 2 Class I, Phase 2 Class I–B, and Phase 2 Class II natural gas fueled engines, use the procedures of 40 CFR part 1065 to measure nonmethane hydrocarbon (NMHC) exhaust emissions from Phase 2 Class I, Phase 2 Class I–B, and Phase 2 Class II natural gas fueled engines.

■ 104. Section 90.308 is amended by revising paragraph (b)(1) to read as follows:

**§ 90.308 Lubricating oil and test fuels.**

* * * * *

(b) * * *

(1) The manufacturer must use gasoline having the specifications, or substantially equivalent specifications approved by the Administrator, as specified in Table 3 in Appendix A of this subpart for exhaust emission testing of gasoline fueled engines. As an option, manufacturers may use the fuel specified in 40 CFR part 1065, subpart H, for gasoline-fueled engines.

* * * * *

■ 105. Section 90.316 is amended by revising paragraphs (b)(2)(ii) and (c) introductory text to read as follows:

**§ 90.316 Hydrocarbon analyzer calibration.**

* * * * *

(b) * * *

(2) * * *

(ii) The HFID optimization procedures outlined in 40 CFR part 1065, subpart D.

* * * * *

(c) *Initial and periodic calibration.* Prior to initial use and monthly thereafter, or within one month prior to the certification test, the FID or HFID hydrocarbon analyzer must be calibrated on all normally used instrument ranges using the steps in this paragraph. Use the same flow rate and pressures as when analyzing samples. Introduce calibration gases directly at the analyzer. An optional method for dilute sampling described in 40 CFR part 1065, subpart F, may be used.

* * * * *

■ 106. Section 90.318 is amended by revising paragraph (d) to read as follows:

**§ 90.318 Oxides of nitrogen analyzer calibration.**

* * * * *

(d) The initial and periodic interference, system check, and calibration test procedures specified in 40 CFR part 1065, subpart D, may be used in lieu of the procedures specified in this section.

■ 107. Section 90.320 is amended by revising paragraph (b) to read as follows:

**§ 90.320 Carbon dioxide analyzer calibration.**

* * * * *

(b) The initial and periodic interference, system check, and calibration test procedures specified in 40 CFR part 1065, subparts C and D, may be used in lieu of the procedures in this section.

■ 108. Section 90.324 is amended by revising paragraphs (a)(3) and (b) to read as follows:

**§ 90.324 Analyzer leakage check.**

(a) * * *

(3) The sample probe and the connection between the sample probe and valve V2, see Figure 1 in Appendix B of subpart E of this part, may be excluded from the leak check.

(b) *Pressure-side leak check.* Substantial leaks of the sample on the pressure side of the system may impact sample integrity if the leaks are of sufficient magnitude. As a safety precaution, good engineering practice would require that manufacturers perform periodic pressure-side leak checks of the sampling system. The recommended maximum leakage rate on the pressure side is five percent of the in-use flow rate.

■ 109. Section 90.326 is amended by revising the introductory text, and paragraphs (a) and (e)(4) to read as follows:

**§ 90.326 Pre- and post-test analyzer calibration.**

Calibrate only the range of each analyzer used during the engine exhaust emission test prior to and after each test in accordance with the following:

(a) Make the calibration by using a zero gas and a span gas. The span gas value must be between 75 and 100 percent of the highest range used.

* * * * *

(e) * * *

(4) If the response of the zero gas or span gas differs more than one percent of full scale at the highest range used, then repeat paragraphs (e)(1) through (3) of this section.

■ 110. Section 90.401 is amended by revising paragraph (d) to read as follows:

**§ 90.401 Applicability.**

* * * * *

(d) For Phase 2 Class I, Phase 2 Class I–B, and Phase 2 Class II natural gas fueled engines, use the equipment specified in 40 CFR part 1065, subparts D and E, to measure nonmethane hydrocarbon (NMHC) exhaust emissions from Phase 2 Class I, Phase 2 Class I–B, and Phase 2 Class II natural gas fueled engines.

■ 111. Section 90.405 is amended by removing paragraph (d)(10).

■ 112. Section 90.408 is amended by revising paragraph (b)(2) to read as follows:

**§ 90.408 Pre-test procedures.**

* * * * *

(b) * * *

(2) An evaluation of the effects of test measurement systems on engine emissions shall be conducted using good engineering judgment to ensure that such test systems do not significantly impact exhaust emissions from the engine. For example, this would require evaluation of all types of emission sampling systems, and of fuel- and air-flow measurement systems for raw sampling. This can be accomplished by operating the engine at the highest engine torque value that will be encountered on the test cycle before and after such test systems are installed to ensure that the impact on measured torque is less than 5 percent. This may also be accomplished by measuring air-to-fuel ratio using a zirconia universal exhaust gas oxygen (UEGO) sensor to ensure that the impact on measured air-to-fuel ratio is less than 5 percent at the highest engine torque value that will be encountered on the test cycle before and after such test systems are installed. The impact of air- and fuel-flow measurement systems may be evaluated based on an engineering analysis of the impact of the change in pressure induced on air-intake pressure and fuel supply pressure by these measurement systems. While this would typically be done before testing, it may also be done as a post-test verification.

* * * * *

■ 113. Section 90.409 is amended by revising paragraph (c)(6) to read as follows:

**§ 90.409 Engine dynamometer test run.**

* * * * *

(c) * * *

(6) If, during the emission measurement portion of a mode, the value of the gauges downstream of the NDIR analyzer(s) G3 or G4 (see Figure 1 in Appendix B of this subpart), differs by more than ±0.5kPa from the pretest value, the test mode is void.

■ 114. Section 90.417 is revised to read as follows:

**§ 90.417 Fuel flow measurement specifications.**

(a) Fuel flow measurement is required only for raw testing. Fuel flow is allowed for dilute testing.

(b) The fuel flow measurement instrument must have a minimum accuracy of one percent of full-scale flow rate for each measurement range used. An exception is allowed for the idle mode. For this mode, the minimum accuracy is ± five percent of full-scale flow rate for the measurement range used. The controlling parameters are the elapsed time measurement of the event and the weight or volume measurement. You may apply the accuracy specifications of 40 CFR part 1065, subpart C, instead of those in this paragraph(b).

■ 115. Section 90.418 is revised to read as follows:

**§ 90.418 Data evaluation for gaseous emissions.**

For the evaluation of the gaseous emissions recording, record the last two minutes of each mode and determine the average values for HC, CO, $CO_2$ and $NO_X$ during each mode from the average concentration readings determined from the corresponding calibration data. Longer averaging times are acceptable, but the reported sampling period must be a continuous set of data.

■ 116. Section 90.419 is amended by removing paragraph (e) and revising the equations for $K_H$ and H in paragraphs (b) and (c) to read as follows:

**§ 90.419 Raw emission sampling calculations—gasoline fueled engines.**

* * * * *

(b) * * *

$K_H$ = Factor for correcting the effects of humidity on $NO_2$ formation for 4-

stroke gasoline small engines, as follows:

$K_H = (9.953 \times H + 0.832)$

Where:

H = the amount of water in an ideal gas; 40 CFR 1065.645 describes how to determine this value (referred to as $x_{H_2O}$).

$K_H$ = 1 for two-stroke gasoline engines.

(c) * * *

$K_H$ = Factor for correcting the effects of humidity on $NO_2$ formation for 4-stroke gasoline small engines, as follows:

$K_H = (9.953 \times H + 0.832)$

Where:

H = the amount of water in an ideal gas; 40 CFR 1065.645 describes how to determine this value (referred to as $x_{H_2O}$).

$K_H$ = 1 for two-stroke gasoline engines.

* * * * *

■ 117. Section 90.421 is amended by revising paragraph (b) introductory text and (b)(4)(ii) introductory text to read as follows:

**§ 90.421 Dilute gaseous exhaust sampling and analytical system description.**

* * * * *

(b) *Component description.* The components necessary for exhaust sampling must meet the following requirements:

* * * * *

(4) * * *

(ii) Conform to the continuous $NO_X$, CO, or $CO_2$ sampling and analysis system to the specifications of 40 CFR 1065.145, with the following exceptions and revisions:

* * * * *

■ 118. Section 90.426 is amended by removing and reserving paragraphs (f) and (g) and revising paragraph (e) to read as follows:

**§ 90.426 Dilute emission sampling calculations—gasoline fueled engines.**

* * * * *

(e) The humidity correction factor $K_H$ is an adjustment made to measured $NO_X$ values. This corrects for the sensitivity that a spark-ignition engine has to the humidity of its combustion air. The following formula is used to determine $K_H$ for $NO_X$ calculations:

$K_H = (9.953\ H + 0.832)$

Where:

H = the amount of water in an ideal gas; 40 CFR 1065.645 describes how to determine this value (referred to as $x_{H_2O}$).

$K_H$ = 1 for two-stroke gasoline engines.

(f) [Reserved]

(g) [Reserved]

* * * * *

■ 119. Section 90.612 is amended by revising paragraph (b)(1) to read as follows:

**§ 90.612 Exemptions and exclusions.**

* * * * *

(b) * * *

(1) *Exemption for repairs or alterations.* A person may conditionally import under bond a nonconforming engine solely for purpose of repairs or alterations. The engine may not be operated in the United States other than for the sole purpose of repair or alteration or shipment to the point of repair or alteration and to the port of export. It may not be sold or leased in the United States and is to be exported upon completion of the repairs or alterations.

* * * * *

■ 120. Section 90.613 is amended by revising paragraph (d) to read as follows:

**§ 90.613 Prohibited acts; penalties.**

* * * * *

(d) An importer who violates section 213(d) and section 203 of the Act is subject to a civil penalty under section 205 of the Act of not more than $32,500 for each engine subject to the violation. In addition to the penalty provided in the Act, where applicable, under the exemption provisions of § 90.612(b), a person or entity who fails to deliver the engine to the U.S. Customs Service is liable for liquidated damages in the amount of the bond required by applicable Customs laws and regulations. The maximum penalty value listed in this paragraph (d) is shown for calendar year 2004. Maximum penalty limits for later years may be adjusted based on the Consumer Price Index. The specific regulatory provisions for changing the maximum penalties, published in 40 CFR part 19, reference the applicable U.S. Code citation on which the prohibited action is based.

■ 121. A new § 90.615 is added to subpart G to read as follows:

**§ 90.615 Importation of partially complete engines.**

The provisions of 40 CFR 1068.330 apply for importation of partially complete engines, or engines that will be modified for applications other than those covered by this part 90.

■ 122. Section 90.706 is amended by revising the equation for N in paragraph (b)(1) to read as follows:

**§ 90.706 Engine sample selection.**

* * * * *

(b) * * *

$$N = \left[\frac{(t_{95} \times \sigma)}{(x - FEL)}\right]^2 + 1$$

* * * * *

■ 123. A new § 90.913 is added to subpart J to read as follows:

**§ 90.913 Exemption for engines certified to standards for large SI engines.**

(a) An engine is exempt from the requirements of this part if it is in an engine family that has a valid certificate of conformity showing that it meets emission standards and other requirements under 40 CFR part 1048 for the appropriate model year.

(b) The only requirements or prohibitions from this part that apply to an engine that is exempt under this section are in this section.

(c) If your engines do not have the certificate required in paragraph (a) of this section, they will be subject to the provisions of this part. Introducing these engines into commerce without a valid exemption or certificate of conformity violates the prohibitions in § 90.1003.

(d) Engines exempted under this section are subject to all the requirements affecting engines under 40 CFR part 1048. The requirements and restrictions of 40 CFR part 1048 apply to anyone manufacturing these engines, anyone manufacturing equipment that uses these engines, and all other persons in the same manner as if these were nonroad spark-ignition engines above 19 kW.

(e) Engines exempted under this section may not generate or use emission credits under this part 90.

■ 124. Section 90.1006 is amended by revising paragraphs (a)(1), (a)(2), (a)(5), and (c)(1) and adding paragraph (a)(6) to read as follows:

**§ 90.1006 Penalties.**

(a) * * *

(1) A person who violates § 90.1003(a)(1), (a)(4), or (a)(5), or a manufacturer or dealer who violates § 90.1003(a)(3)(i), is subject to a civil penalty of not more than $32,500 for each violation.

(2) A person other than a manufacturer or dealer who violates § 90.1003(a)(3)(i) or any person who violates § 90.1003(a)(3)(ii) is subject to a civil penalty of not more than $2,750 for each violation.

* * * * *

(5) A person who violates § 90.1003(a)(2) or (a)(6) is subject to a civil penalty of not more than $32,500 per day of violation.

(6) The maximum penalty values listed in this section are shown for

calendar year 2004. Maximum penalty limits for later years may be adjusted based on the Consumer Price Index. The specific regulatory provisions for changing the maximum penalties, published in 40 CFR part 19, reference the applicable U.S. Code citation on which the prohibited action is based.

* * * * *

(c) * * *

(1) Administrative penalty authority. In lieu of commencing a civil action under paragraph (b) of this section, the Administrator shall assess any civil penalty prescribed in paragraph (a) of this section, except that the maximum amount of penalty sought against each violator in a penalty assessment proceeding can not exceed $270,000, unless the Administrator and the Attorney General jointly determine that a matter involving a larger penalty amount is appropriate for administrative penalty assessment. Any such determination by the Administrator and the Attorney General is not subject to judicial review. Assessment of a civil penalty is made by an order made on the record after opportunity for a hearing held in accordance with the procedures found at part 22 of this chapter. The Administrator may compromise, or remit, with or without conditions, any administrative penalty which may be imposed under this section.

* * * * *

## PART 91—CONTROL OF EMISSIONS FROM MARINE SPARK-IGNITION ENGINES

■ 125. The authority citation for part 91 is revised to read as follows:

**Authority:** 42 U.S.C. 7401—7671q.

■ 126. Section 91.3 is amended by revising the definitions for ''Marine spark-ignition engine'', ''Marine vessel'', and ''United States'', adding definitions for ''Amphibious vehicle'', ''Marine engine'', and ''Spark-ignition'' in alphabetical order to read as follows:

### § 91.3 Definitions.

* * * * *

*Amphibious vehicle* means a vehicle with wheels or tracks that is designed primarily for operation on land and secondarily for operation in water.

* * * * *

*Marine engine* means a nonroad engine that is installed or intended to be installed on a marine vessel. This includes a portable auxiliary marine engine only if its fueling, cooling, or exhaust system is an integral part of the vessel. There are two kinds of marine engines:

(1) Propulsion marine engine means a marine engine that moves a vessel through the water or directs the vessel's movement.

(2) Auxiliary marine engine means a marine engine not used for propulsion.

* * * * *

*Marine spark-ignition engine* means a spark-ignition marine engine that propels a marine vessel.

*Marine vessel* has the meaning given in 1 U.S.C. 3, except that it does not include amphibious vehicles. The definition in 1 U.S.C. 3 very broadly includes every craft capable of being used as a means of transportation on water.

* * * * *

*Spark-ignition* means relating to a gasoline-fueled engine or any other type of engine with a spark plug (or other sparking device) and with operating characteristics significantly similar to the theoretical Otto combustion cycle. Spark-ignition engines usually use a throttle to regulate intake air flow to control power during normal operation.

* * * * *

*United States* means the States, the District of Columbia, the Commonwealth of Puerto Rico, the Commonwealth of the Northern Mariana Islands, Guam, American Samoa, and the U.S. Virgin Islands.

* * * * *

■ 127. Section 91.119 is amended by adding and reserving paragraph (b)(3) and adding paragraph (b)(4) to read as follows:

### § 91.119 Certification procedure—use of special test procedures.

* * * * *

(b) * * *

(3) [Reserved]

(4) Where we specify mandatory compliance with the procedures of 40 CFR part 1065, manufacturers may elect to use the procedures specified in 40 CFR part 86, subpart N, as an alternate test procedure without advance approval by the Administrator.

■ 128. Section 91.207 is amended by revising the second equation for S(t) in paragraph (a) to read as follows:

### § 91.207 Credit calculation and manufacturer compliance with emission standards.

(a) * * *

$$S(t) = \exp -(0.906 \times t/\mu_{life})^4$$

* * * * *

■ 129. Section 91.301 is amended by revising paragraph (c) to read as follows:

### § 91.301 Scope; applicability.

* * * * *

(c) Additional information about system design, calibration methodologies, and so forth, for raw gas sampling can be found in 40 CFR part 1065. Examples for system design, calibration methodologies, and so forth, for dilute sampling can be found in 40 CFR part 1065.

■ 130. Section 91.316 is amended by revising paragraphs (b)(2)(ii) and (c) introductory text, and the first equation in paragraph (d)(6) to read as follows:

### § 91.316 Hydrocarbon analyzer calibration.

* * * * *

(b) * * *

(2) * * *

(ii) The HFID optimization procedures outlined in 40 CFR part 1065, subpart D.

* * * * *

(c) Initial and periodic calibration. Prior to introduction into service and monthly thereafter, or within one month prior to the certification test, calibrate the FID or HFID hydrocarbon analyzer on all normally used instrument ranges, using the steps in this paragraph. Use the same flow rate and pressures as when analyzing samples. Introduce calibration gases directly at the analyzer. An optional method for dilute sampling described in 40 CFR part 1065, subpart F, may be used.

* * * * *

(d) * * *

(6) * * *

$$\text{percent } O_2 \text{ I} = (B - \text{Analyzer response (ppm C)})/B \times 100$$

* * * * *

■ 131. Section 91.318 is amended by revising paragraph (d) and the equation in paragraph (b)(11) to read as follows:

### § 91.318 Oxides of nitrogen analyzer calibration.

* * * * *

(b) * * *

(11) * * *

$$\text{percent efficiency} = (1 + (a - b)/(c - d)) \times 100$$

* * * * *

(d) The initial and periodic interference, system check, and calibration test procedures specified in 40 CFR part 1065, subparts C and D, may be used in lieu of the procedures specified in this section.

■ 132. Section 91.320 is amended by revising paragraph (b) to read as follows:

### § 91.320 Carbon dioxide analyzer calibration.

* * * * *

(b) The initial and periodic interference, system check, and calibration test procedures specified in 40 CFR part 1065, subparts C and D, may be used in lieu of the procedures in this section.

■ 133. Section 91.325 is amended by revising the equations in paragraphs

(c)(1)(iv) and (c)(2)(iii) and adding paragraph (c)(2)(iv) to read as follows:

**§ 91.325 Analyzer interference checks.**

* * * * *

(c) * * *

(1) * * *

(iv) * * *

percent $CO_2$ quench =100 − 100 × [c × a/(d × a − d × b)] × a/b

* * * * *

(2) * * *

(iii) * * *

D1 = D × (1 − Z1/100)

(iv)(A) The maximum raw or dilute exhaust water vapor concentration expected during testing (designated as Wm) can be estimated from the $CO_2$ span gas (or as defined in the equation in this paragraph and designated as A) criteria in paragraph (c)(1) of this section and the assumption of a fuel atom H/C ratio of 1.8:1 as:

Wm(%) = 0.9 × A(%)

Where:

A = maximum $CO_2$ concentration expected in the sample system during testing.

(B) Percent water quench shall not exceed 3 percent and shall be calculated by:

% Water Quench = 100 × (D1 − AR)/D1 × Wm/Z1

■ 134. Section 91.419 is amended by revising the entry defining ''$M_{HCexh}$'' in paragraph (b) to read as follows:

**§ 91.419 Raw emission sampling calculations.**

* * * * *

(b) * * *

$M_{HCexh}$ = Molecular weight of hydrocarbons in the exhaust; see the following equation:

$M_{HCexh} = 12.01 + 1.008 \times \alpha$

* * * * *

■ 135. Section 91.421 is amended by revising paragraph (b)(4)(ii) and (b)(4)(iii) to read as follows:

**§ 91.421 Dilute gaseous exhaust sampling and analytical system description.**

* * * * *

(b) * * *

(4) * * *

(ii) Conform to the continuous $NO_X$, CO, or $CO_2$ sampling and analysis system to the specifications of 40 CFR 1065.145, with the following exceptions and revisions:

(A) Heat the system components requiring heating only to prevent water condensation, the minimum component temperature is 55 °C.

(B) Coordinate analysis system response time with CVS flow fluctuations and sampling time/test cycle offsets to meet the time-alignment and dispersion specifications in 40 CFR pat 1065, subpart C.

(C) Use only analytical gases conforming to the specifications of 40 CFR 1065.750 for calibration, zero, and span checks.

(D) Use a calibration curve conforming to 40 CFR part 1065, subparts C and D, for CO, $CO_2$, and $NO_X$ for any range on a linear analyzer below 155 ppm.

(iii) Convert the chart deflections or voltage output of analyzers with non-linear calibration curves to concentration values by the calibration curve(s) specified in 40 CFR part 1065, subpart D, before flow correction (if used) and subsequent integration takes place.

■ 136. Section 91.705 is amended by revising paragraph (d) to read as follows:

**§ 91.705 Prohibited acts; penalties.**

* * * * *

(d) An importer who violates § 91.1103(a)(1), section 213(d) and section 203 of the Act is subject to a civil penalty under § 91.1106 and section 205 of the Act of not more than$32,500 for each marine engine subject to the violation. In addition to the penalty provided in the Act, where applicable, a person or entity who imports an engine under the exemption provisions of § 91.704(b) and, who fails to deliver the marine engine to the U.S. Customs Service by the end of the period of conditional admission is liable for liquidated damages in the amount of the bond required by applicable Customs laws and regulations. The maximum penalty value listed in this paragraph (d) is shown for calendar year 2004. Maximum penalty limits for later years may be adjusted based on the Consumer Price Index. The specific regulatory provisions for changing the maximum penalties, published in 40 CFR part 19, reference the applicable U.S. Code citation on which the prohibited action is based.

■ 137. A new § 91.707 is added to read as follows:

**§ 91.707 Importation of partially complete engines.**

The provisions of 40 CFR 1068.330 apply for importation of partially complete engines.

■ 138. Section 91.1106 is amended by revising paragraphs (a)(1), (a)(2), (a)(5), and (c)(1) and adding paragraph (a)(6) to read as follows:

**§ 91.1106 Penalties.**

(a) * * *

(1) A person who violates § 91.1103 (a)(1), (a)(4), or (a)(5), or a manufacturer or dealer who violates § 91.1103(a)(3)(i), is subject to a civil penalty of not more than $32,500 for each violation.

(2) A person other than a manufacturer or dealer who violates § 91.1103(a)(3)(i) or any person who violates § 91.1103(a)(3)(ii) is subject to a civil penalty of not more than $2,750 for each violation.

* * * * *

(5) A person who violates § 91.1103 (a)(2) or (a)(6) is subject to a civil penalty of not more than $32,500 per day of violation.

(6) The maximum penalty values listed in this section are shown for calendar year 2004. Maximum penalty limits for later years may be adjusted based on the Consumer Price Index. The specific regulatory provisions for changing the maximum penalties, published in 40 CFR part 19, reference the applicable U.S. Code citation on which the prohibited action is based.

* * * * *

(c) * * *

(1) Administrative penalty authority. In lieu of commencing a civil action under paragraph (b) of this section, the Administrator shall assess any civil penalty prescribed in paragraph (a) of this section, except that the maximum amount of penalty sought against each violator in a penalty assessment proceeding can not exceed $270,000, unless the Administrator and the Attorney General jointly determine that a matter involving a larger penalty amount is appropriate for administrative penalty assessment. Any such determination by the Administrator and the Attorney General is not subject to judicial review. Assessment of a civil penalty is made by an order made on the record after opportunity for a hearing held in accordance with the procedures found at part 22 of this chapter. The Administrator may compromise, or remit, with or without conditions, any administrative penalty which may be imposed under this section.

* * * * *

## PART 92—CONTROL OF AIR POLLUTION FROM LOCOMOTIVES AND LOCOMOTIVE ENGINES

■ 139. The authority citation for part 92 is revised to read as follows:

**Authority:** 42 U.S.C. 7401–7671q.

■ 140. Section 92.1 is amended by revising paragraphs (a) introductory text, (b)(3), and (b)(4) and adding paragraph (d) to read as follows:

**§ 92.1 Applicability.**

(a) Except as noted in paragraphs (b) and (d) of this section, the provisions of this part apply to manufacturers, remanufacturers, owners and operators of:

* * * * *

(b) * * *

(3) Locomotive engines which provide only hotel power (see 40 CFR parts 89 and 1039 to determine if such engines are subject to EPA emission requirements); or

(4) Nonroad vehicles excluded from the definition of locomotive in § 92.2, and the engines used in such nonroad vehicles (see 40 CFR parts 86, 89, and 1039 to determine if such vehicles or engines are subject to EPA emission requirements).

* * * * *

(d) The provisions of subpart L of this part apply to all persons.

■ 141. Section 92.2 is amended in paragraph (b) by revising the definitions for ''Calibration'', ''Locomotive'', paragraph (5) of the definition for ''New locomotive or new locomotive engine'', ''Repower'', and ''United States'' to read as follows:

**§ 92.2 Definitions.**

* * * * *

(b) * * *

*Calibration* means the set of specifications, including tolerances, specific to a particular design, version, or application of a component, or components, or assembly capable of functionally describing its operation over its working range. This definition does apply to Subpart B of this part.

* * * * *

*Locomotive* means a self-propelled piece of on-track equipment designed for moving or propelling cars that are designed to carry freight, passengers or other equipment, but which itself is not designed or intended to carry freight, passengers (other than those operating the locomotive) or other equipment. The following other equipment are not locomotives (see 40 CFR parts 86 and 89 for this equipment):

(1) Equipment which is designed for operation both on highways and rails are not locomotives.

(2) Specialized railroad equipment for maintenance, construction, post accident recovery of equipment, and repairs; and other similar equipment, are not locomotives.

(3) Vehicles propelled by engines with total rated horsepower of less than 750 kW (1006 hp) are not locomotives (see 40 CFR parts 86 and 89 for this equipment), unless the owner (including manufacturers) chooses to have the equipment certified under the requirements of this part. Where equipment is certified as a locomotive pursuant to this paragraph (3), it shall be subject to the requirements of this part for the remainder of its service life. For locomotives propelled by two or more engines, the total rated horsepower is the sum of the rated horsepowers of each engine.

* * * * *

*New locomotive* or *new locomotive engine* means: * * *

(5) Notwithstanding paragraphs (1) through (3) of this definition, locomotives and locomotive engines which are owned by a small railroad and which have never been manufactured or remanufactured into a certified configuration are not new.

* * * * *

*Repower* means replacement of the engine in a previously used locomotive with a freshly manufactured locomotive engine. Replacing a locomotive engine with a freshly manufactured locomotive engine in a locomotive that has a refurbished or reconditioned chassis such that less than 25 percent of the parts of the locomotive were previously used(as weighted by dollar value) is not repowering.

* * * * *

*United States* means the States, the District of Columbia, the Commonwealth of Puerto Rico, the Commonwealth of the Northern Mariana Islands, Guam, American Samoa, and the U.S. Virgin Islands.

* * * * *

■ 142. Section 92.8 is amended by revising paragraph (b) to read as follows:

**§ 92.8 Emission standards.**

* * * * *

(b) No crankcase emissions shall be discharged directly into the ambient atmosphere from any new locomotive or new locomotive engine, except as allowed by paragraph (1) of this paragraph (b).

(1) Discharge of crankcase emissions into the engine exhaust complies with this prohibition, provided crankcase emissions are measured and included with exhaust emissions. Other discharge of crankcase emissions complies with this prohibition, provided crankcase emissions are measured in all certification, production-line, and in-use tests and the masses are added mathematically to the exhaust emissions.

(2) Compliance with this standard is required throughout the entire service life of the locomotive or locomotive engine.

* * * * *

■ 143. Section 92.12 is amended by adding paragraphs (g) and (h) to read as follows:

**§ 92.12 Interim provisions.**

* * * * *

(g) *Tier 0 locomotive labels.* Remanufacturers may use identical labels for locomotives and engines for Tier 0 locomotives, provided the remanufacturer demonstrates to EPA that they will supply two labels (one for the locomotive and one for the engine) only with those remanufacturing systems being applied to locomotives that have not been previously labeled (i.e., locomotives that have not been previously certified). For other locomotives, the remanufacturer may only supply one label.

(h) *Labels for calendar year 2005.* During calendar year 2005, manufacturers and remanufacturers may comply with the labeling requirements that were applicable during calendar year 2004, instead of the labeling requirements specified in § 92.212(c)(2)(v).

■ 144. Section 92.104 is amended by revising paragraph (b)(1)(i) to read as follows:

**§ 92.104 Locomotive and engine testing; overview.**

* * * * *

(b) * * *

(1) * * *

(i) Engine speed setpoints for each mode shall be within 2 percent of the speed of the engine when it is operated in the locomotive. Engine load setpoints for each mode shall be within 2 percent (or 3.0 horsepower, whichever is greater) of the load of the engine when it is operated in the locomotive.

* * * * *

■ 145. Section 92.105 is amended by revising paragraph (d) to read as follows:

**§ 92.105 General equipment specifications.**

* * * * *

(d) *Electrical measurements.* Instruments used to measure engine power output shall comply with the requirements of § 92.106.

* * * * *

■ 146. Section 92.106 is amended by revising paragraph (b)(1)(ii) to read as follows:

**§ 92.106 Equipment for loading the engine.**

* * * * *

(b) * * *

(1) * * *

(ii) Engine flywheel torque readout shall be accurate to within ±2 percent of the NIST ''true'' value torque at all power settings above 10 percent of full-

scale, and accurate to within ±5 percent of the NIST ''true'' value torque at power settings at or below 10 percent of full-scale.

■ 147. Section 92.109 is amended by revising paragraph (c)(3) to read as follows:

**§ 92.109 Analyzer specifications.**

* * * * *

(c) * * *

(3) *Alcohols and Aldehydes.* The sampling and analysis procedures for alcohols and aldehydes, where applicable, shall be approved by the Administrator prior to the start of testing. Procedures are allowed if they are consistent with the general requirements of 40 CFR part 1065, subpart I, for sampling and analysis of alcohols and aldehydes, and with good engineering practice.

* * * * *

■ 148. Section 92.114 is amended by revising paragraphs (a)(2)(ii), (d)(2) introductory text and (e)(1) to read as follows:

**§ 92.114 Exhaust gas and particulate sampling and analytical system.**

* * * * *

(a) * * *

(2) * * *

(ii) For locomotive testing where the locomotive has multiple exhaust stacks, proportional samples may be collected from each exhaust outlet instead of ducting the exhaust stacks together, provided that the $CO_2$ concentrations in each exhaust stream are shown (either prior to testing or during testing) to be within 5 percent of each other at notch 8.

* * * * *

(d) * * *

(2) For engine testing, either a locomotive-type or a facility-type exhaust system (or a combination system) may be used. The exhaust backpressure for engine testing shall be set between 90 and 100 percent of the maximum backpressure that will result with the exhaust systems of the locomotives in which the engine will be used. Backpressure less than 90 percent of the maximum value is also allowed, provided the backpressure is within 0.07 psi of the maximum value. The facility-type exhaust system shall meet the following requirements:

* * * * *

(e) * * *

(1) Dilution of the exhaust prior to sampling is allowed for gaseous emissions. The equipment and methods used for dilution, sampling and analysis shall comply with the requirements of 40 CFR part 1065, with the following exceptions and additional requirements:

(i) Proportional sampling and heat exchangers are not required;

(ii) Larger minimum dimensions for the dilution tunnel(s) shall be specified by the Administrator;

(iii) Other modifications may be made with written approval from the Administrator.

* * * * *

■ 149. Section 92.123 is amended by revising paragraph (a)(2) to read as follows:

**§ 92.123 Test procedure; general requirements.**

(a) * * *

(2) For locomotives with multiple exhaust stacks, smoke testing is required for only one of the exhaust stacks provided the following conditions are met:

(i) The stack that is not tested is not visibly smokier than the stack that is tested, and

(ii) None of the measured opacity values for the stack tested are greater than three-quarters of the level allowed by any of the applicable smoke standards.

* * * * *

■ 150. Section 92.124 is amended by revising paragraph (f) to read as follows:

**§ 92.124 Test sequence; general requirements.**

* * * * *

(f) The required test sequence is described in Table B124–1 of this section, as follows:

TABLE B124–1

Test sequence for locomotives and locomotive engines

| Mode No. | Notch setting | Time in notch | Emissions measured [2] | Power, and fuel consumption measured |
|---|---|---|---|---|
| Warmup | Notch 8 | 5 ± 1 min | None | None |
| Warmup | Lowest Idle | 15 min maximum (after engine speed reaches lowest idle speed). | None | None |
| 1a | Low Idle[1] | 6 min minimum | All | Both |
| 1 | Normal Idle | 6 min minimum | All | Both |
| 2 | Dynamic Brake[1] | 6 min minimum | All | Both |
| 3 | Notch 1 | 6 min minimum | All | Both |
| 4 | Notch 2 | 6 min minimum | All | Both |
| 5 | Notch 3 | 6 min minimum | All | Both |
| 6 | Notch 4 | 6 min minimum | All | Both |
| 7 | Notch 5 | 6 min minimum | All | Both |
| 8 | Notch 6 | 6 min minimum | All | Both |
| 9 | Notch 7 | 6 min minimum | All | Both |
| 10 | Notch 8 | 15 min minimum | All | Both |

[1] Omit if not so equipped.

[2] The EPA test sequence for locomotives and locomotive engines may be performed once, with gaseous, particulate and smoke measurements performed simultaneously, or it may be performed twice with gaseous, and particulate measurements performed during one test sequence and smoke measurements performed during the other test sequence. The minimum time in notch is three minutes for test sequences in which only smoke is measured.

■ 151. Section 92.126 is amended by revising paragraph (b)(3) to read as follows:

**§ 92.126 Test run.**

* * * * *

(b) * * *

(3) Fuel flow rate shall be measured continuously. The value reported for the fuel flow rate shall be a one-minute average of the instantaneous fuel flow

measurements taken during the last minute of the minimum sampling period listed in Table B124–1 in § 92.124; except for testing during idle modes, where it shall be a three-minute average of the instantaneous fuel flow measurements taken during the last three minutes of the minimum sampling period listed in Table B124–1 in § 92.124. Sampling periods greater than one minute are allowed, consistent with good engineering practice. Fuel flow averaging periods should generally match the emission sampling periods as closely as is practicable.

* * * * *

■ 152. Section 92.131 is amended by revising paragraph (b)(3) to read as follows:

**§ 92.131 Smoke, data analysis.**

* * * * *

(b) * * *

(3) The ''steady-state'' value is either:

(i) The highest reading occurring more than two minutes after the notch change (excluding peaks lasting less than 5 seconds, caused by such random events as the cycling of an air compressor) if opacity measurements are recorded graphically; or

(ii) The average of the second by second values between 120 and 180 seconds after the notch change if opacity measurements are recorded digitally.

* * * * *

■ 153. Section 92.132 is amended by revising paragraphs (b)(3)(iii)(D)(*2*) and (d) to read as follows:

**§ 92.132 Calculations.**

* * * * *

(b) * * *

(3) * * *

(iii) * * *

(D) * * *

(*2*) If a CO instrument that meets the criteria specified in 40 CFR part 1065, subpart C, is used without a sample dryer according to 40 CFR 1065.145, $CO_{em}$ must be substituted directly for $CO_e$ and $CO_{dm}$ must be substituted directly for $CO_d$.

* * * * *

(d) *$NO_X$ correction factor.* (1) $NO_X$ emission rates ($M_{NOx\ mode}$) shall be adjusted to account for the effects of humidity and temperature by multiplying each emission rate by $K_{NOx}$, which is calculated from the following equations:

$$K_{NOX} = (K)(1 + (0.25(\log K)^2)^{1/2})$$

$$K = (K_H)(K_T)$$

$$K_H = [C_1 + C_2\exp((-0.0143)(10.714))]/[C_1 + C_2\exp((-0.0143)(1000H))]$$

$$C_1 = -8.7 + 164.5\exp(-0.0218(A/F)_{wet})$$

$$C_2 = 130.7 + 3941\exp(-0.0248(A/F)_{wet})$$

Where:

$(A/F)_{wet}$ = Mass of moist air intake divided by mass of fuel intake.

$K_T = 1/[1 - 0.0107(T_{30} - T_A)]$ for tests conducted at ambient temperatures below 30 °C.

$K_T = 1.00$ for tests conducted at ambient temperatures at or above 30 °C.

$T_{30}$ = The measured intake manifold air temperature in the locomotive when operated at 30 °C (or 100 °C, where intake manifold air temperature is not available).

$T_A$ = The measured intake manifold air temperature in the locomotive as tested (or the ambient temperature (°C), where intake manifold air temperature is not available).

* * * * *

■ 154. Section 92.203 is amended by revising paragraph (d)(1)(i) to read as follows:

**§ 92.203 Application for certification.**

* * * * *

(d) *Required content.* Each application must include the following information:(1)(i) A description of the basic engine design including, but not limited to, the engine family specifications, the provisions of which are contained in § 92.204;

* * * * *

■ 155. Section 92.204 is amended by revising paragraph (a) to read as follows:

**§ 92.204 Designation of engine families.**

* * * * *

(a) Manufacturers and remanufacturers shall divide their locomotives and locomotive engines into groupings of locomotives and locomotive engines which are expected to have similar emission characteristics throughout their useful life. Each group shall be defined as a separate engine family. Freshly manufactured locomotives may not be included in the same engine family as remanufactured locomotives. Freshly manufactured engines may be included in the same engine family as remanufactured locomotives, provided such engines are used as replacement engines for locomotive models included in the engine family.

* * * * *

■ 156. Section 92.205 is amended by revising paragraph (a) introductory text to read as follows:

**§ 92.205 Prohibited controls, adjustable parameters.**

(a) Any system installed on, or incorporated in, a new locomotive or new locomotive engine to enable such locomotive or locomotive engine to conform to standards contained in this part:

* * * * *

■ 157. Section 92.208 is amended by revising paragraphs (a) and (b) to read as follows:

**§ 92.208 Certification.**

(a) Paragraph (a) of this section applies to manufacturers of new locomotives and new locomotive engines. If, after a review of the application for certification, test reports and data acquired from a freshly manufactured locomotive or locomotive engine or from a development data engine, and any other information required or obtained by EPA, the Administrator determines that the application is complete and that the engine family meets the requirements of the Act and this part, he/she will issue a certificate of conformity with respect to such engine family except as provided by paragraph (c)(3) of this section. The certificate of conformity is valid for each engine family from the date of issuance by EPA until 31 December of the model year or calendar year for which it is issued and upon such terms and conditions as the Administrator deems necessary or appropriate to assure that the production locomotives or engines covered by the certificate will meet the requirements of the Act and of this part.

(b) This paragraph (b) applies to remanufacturers of locomotives and locomotive engines. If, after a review of the application for certification, test reports and data acquired from a remanufactured locomotive or locomotive engine or from a development data engine, and any other information required or obtained by EPA, the Administrator determines that the engine family meets the requirements of the Act and of this subpart, he/she will issue a certificate of conformity with respect to such engine family except as provided by paragraph (c)(3) of this section. The certificate of conformity is valid for each engine family from the date of issuance by EPA until 31 December of the model year or calendar year for which it is issued and upon such terms and conditions as the Administrator deems necessary or appropriate to assure that the production locomotives or engines covered by the certificate will meet the requirements of the Act and of this part.

* * * * *

■ 158. Section 92.210 is amended by revising paragraphs (b)(1), (b)(2), (d)(2), and (d)(3) to read as follows:

**§ 92.210 Amending the application and certificate of conformity.**

* * * * *

(b) * * *

(1) A full description of the change to be made in production, or of the locomotives or engines to be added;

(2) Engineering evaluations or data showing that the locomotives or engines as modified or added will comply with all applicable emission standards; and

* * * * *

(d) * * *

(2) If the Administrator determines that the change or new locomotive(s) or engine(s) meets the requirements of this part and the Act, the appropriate certificate of conformity shall be amended.

(3) If the Administrator determines that the changed or new locomotive(s) or engine(s) does not meet the requirements of this part and the Act, the certificate of conformity will not be amended. The Administrator shall provide a written explanation to the manufacturer or remanufacturer of the decision not to amend the certificate. The manufacturer or remanufacturer may request a hearing on a denial.

* * * * *

■ 159. Section 92.212 is amended by revising paragraphs (b)(2)(ii), (b)(2)(v)(A), (b)(2)(v)(G), (c)(2)(v)(A), and(c)(2)(v)(D)(*2*) to read as follows:

**§ 92.212 Labeling.**

* * * * *

(b) * * *

(2) * * *

(ii) The label shall be attached to a locomotive chassis part necessary for normal operation and not normally requiring replacement during the service life of the locomotive. This label may not be attached to the engine.

* * * * *

(v) * * *

(A) The label heading: Original Locomotive Emission Control Information. Manufacturers and remanufacturers may add a subheading to distinguish this label from the engine label described in paragraph (c) of this section.

* * * * *

(G) The standards and/or FELs to which the locomotive was certified.

* * * * *

(c) * * *

(2) * * *

(v) * * *

(A) The label heading: Engine Emission Control Information. Manufacturers and remanufacturers may add a subheading to distinguish this label from the locomotive label described in paragraph (b) of this section.

* * * * *

(D) * * *

(*2*) This locomotive and locomotive engine conform to U.S. EPA regulations applicable to locomotives and locomotive engines originally manufactured on or after January 1, 2002 and before January 1, 2005; or

* * * * *

■ 160. Section 92.215 is amended by revising paragraphs (a)(2)(i)(A) and (b) to read as follows:

**§ 92.215 Maintenance of records; submittal of information; right of entry.**

(a) * * *

(2) * * *

(i) * * *

(A) In the case where a current production engine is modified for use as a certification engine or in a certification locomotive, a description of the process by which the engine was selected and of the modifications made. In the case where the certification locomotive or the engine for a certification locomotive is not derived from a current production engine, a general description of the buildup of the engine (*e.g.*, whether experimental heads were cast and machined according to supplied drawings). In the cases in the previous two sentences, a description of the origin and selection process for fuel system components, ignition system components, intake-air pressurization and cooling-system components, cylinders, pistons and piston rings, exhaust smoke control system components, and exhaust aftertreatment devices as applicable, shall be included. The required descriptions shall specify the steps taken to assure that the certification locomotive or certification locomotive engine, with respect to its engine, drivetrain, fuel system, emission-control system components, exhaust aftertreatment devices, exhaust smoke control system components or any other devices or components as applicable, that can reasonably be expected to influence exhaust emissions will be representative of production locomotives or locomotive engines and that either: All components and/or locomotive or engine, construction processes, component inspection and selection techniques, and assembly techniques employed in constructing such locomotives or engines are reasonably likely to be implemented for production locomotives or engines; or that they are as close as practicable to planned construction and assembly process.

* * * * *

(b) The manufacturer or remanufacturer of any locomotive or locomotive engine subject to any of the standards prescribed in this part shall submit to the Administrator, at the time of issuance by the manufacturer or remanufacturer, copies of all instructions orexplanations regarding the use, repair, adjustment, maintenance, or testing of such locomotive or engine, relevant to the control of crankcase, or exhaust emissions issued by the manufacturer or remanufacturer, for use by other manufacturers or remanufacturers, assembly plants, distributors, dealers, owners and operators. Any material not translated into the English language need not be submitted unless specifically requested by the Administrator.

* * * * *

■ 161. Section 92.216 is amended by removed by removing and reserving paragraph (a)(2).

**§ 92.216 [Amended]**

■ 162. Section 92.403 is amended by revising paragraph (b) to read as follows:

**§ 92.403 Emission defect information report.**

* * * * *

(b) Defect information reports required under paragraph (a) of this section must be submitted not more than 15 working days after the same emission-related defect is found to affect 10 or more locomotives or locomotive engines. Information required by paragraph (c) of this section that is either not available within 15 working days or is significantly revised must be submitted as it becomes available.

* * * * *

■ 163. Section 92.508 is amended by revising paragraph (e) introductory text to read as follows:

**§ 92.508 Calculation and reporting of test results.**

* * * * *

(e) Within 45 calendar days of the end of each quarter, each manufacturer or remanufacturer must submit to the Administrator a report which includes the following information:

* * * * *

■ 164. Section 92.511 is amended by revising paragraph (g) introductory text to read as follows:

**§ 92.511 Remanufactured locomotives: installation audit requirements.**

* * * * *

(g) Within 45 calendar days of the end of each quarter, each remanufacturer must submit to the Administrator a

report which includes the following information:

* * * * *

■ 165. Section 92.512 is amended by revising paragraph (e) to read as follows:

**§ 92.512 Suspension and revocation of certificates of conformity.**

* * * * *

(e) The Administrator shall notify the manufacturer or remanufacturer in writing of any suspension or revocation of a certificate of conformity in whole or in part; a suspension or revocation is effective upon receipt of such notification or thirty days from the time an engine family is deemed to be in noncompliance under §§ 92.508(d), 92.510(a), 92.510(b) or 92.511(f), whichever is earlier, except that the certificate is immediately suspended with respect to any failed locomotives or locomotive engines as provided for in paragraph (a) of this section.

* * * * *

■ 166. A new § 92.806 is added to read as follows:

**§ 92.806 Importation of partially complete engines.**

The provisions of 40 CFR 1068.330 apply for importation of partially complete engines, or engines that will be modified for applications other than those covered by this part 92.

■ 167. Section 92.906 is amended by revising paragraph (a) introductory text to read as follows:

**§ 92.906 Manufacturer-owned, remanufacturer-owned exemption and display exemption.**

(a) Any manufacturer-owned or remanufacturer-owned locomotive or locomotive engine is exempt from § 92.1103, without application, if the manufacturer complies with the following terms and conditions:

* * * * *

■ 168. Section 92.907 is amended by revising paragraphs (a)(3) and (b)(3) to read as follows:

**§ 92.907 Non-locomotive-specific engine exemption.**

(a) * * *

(3) The number of such engines exempted under this paragraph (a) does not exceed:

(i) 50 per manufacturer in any calendar year, where EPA determines that the use of the non-locomotive-specific engines will result in a significantly greater degree of emission control over the lifetime of the locomotive than using remanufactured engines certified under this part 92; or

(ii) 25 per manufacturer in any calendar year, where EPA has not determined that the use of the non-locomotive-specific engines will result in a significantly greater degree of emission control over the lifetime of the locomotive than using remanufactured engines certified under this part 92;

* * * * *

(b) * * *

(3) The number of such locomotives sold or leased by the locomotive manufacturer within any three-year period, and exempted under this paragraph (b) does not exceed 30; and

* * * * *

■ 169. A new § 92.912 is added to subpart J to read as follows:

**§ 92.912 Staged-assembly exemption.**

You may ask us to provide a temporary exemption to allow you to complete production of your engines at different facilities, as long as you maintain control of the engines until they are in their certified configuration. We may require you to take specific steps to ensure that such engines are in their certified configuration before reaching the ultimate purchaser. You may request an exemption under this section in your application for certification, or in a separate submission.

■ 170. Section 92.1106 is amended by revising paragraphs (a)(1), (a)(2), (a)(5), and (c)(1) and adding paragraph (a)(6) to read as follows:

**§ 92.1106 Penalties.**

(a) * * *

(1) A person who violates § 92.1103 (a)(1), (a)(4), or (a)(5), or a manufacturer, remanufacturer, dealer or railroad who violates § 92.1103(a)(3)(i) or (iii) is subject to a civil penalty of not more than $32,500 for each violation.

(2) A person other than a manufacturer, remanufacturer, dealer, or railroad who violates § 92.1103(a)(3)(i) or any person who violates § 92.1103(a)(3)(ii) is subject to a civil penalty of not more than $2,750 for each violation.

* * * * *

(5) A person who violates § 92.1103(a)(2) is subject to a civil penalty of not more than$32,500 per day of violation.

(6) The maximum penalty values listed in this section are shown for calendar year 2004. Maximum penalty limits for later years may be adjusted based on the Consumer Price Index. The specific regulatory provisions for changing the maximum penalties, published in 40 CFR part 19, reference the applicable U.S. Code citation on which the prohibited action is based.

* * * * *

(c) * * *

(1) *Administrative penalty authority.* In lieu of commencing a civil action under paragraph (b) of this section, the Administrator may assess any civil penalty prescribed in paragraph (a) of this section, except that the maximum amount of penalty sought against each violator in a penalty assessment proceeding shall not exceed $270,000, unless the Administrator and the Attorney General jointly determine that a matter involving a larger penalty amount is appropriate for administrative penalty assessment. Any such determination by the Administrator and the Attorney General is not subject to judicial review. Assessment of a civil penalty shall be by an order made on the record after opportunity for a hearing held in accordance with the procedures found at part 22 of this chapter. The Administrator may compromise, or remit, with or without conditions, any administrative penalty which may be imposed under this section.

* * * * *

■ 171. Appendix IV to part 92 is amended by revising paragraph (d)(1) to read as follows:

**Appendix IV to Part 92—Guidelines for Determining Equivalency Between Emission Measurement Systems**

* * * * *

(d) * * *

(1) Four locomotive or locomotive engine tests, conducted in accordance with the provisions of subpart B of this part; or

* * * * *

## PART 94—CONTROL OF AIR POLLUTION FROM MARINE COMPRESSION-IGNITION ENGINES

■ 172. The authority citation for part 94 is revised to read as follows:

**Authority:** 42 U.S.C. 7401–7671q.

■ 173. Section 94.2 is amended in paragraph (b) by removing the definitions of *Auxiliary engine* and *Propulsion engine,* revising the definitions of *Marine engine, Marine vessel,* and *United States,* and adding a definition of *Amphibious vehicle* in alphabetical order to read as follows:

**§ 94.2 Definitions.**

* * * * *

*Amphibious vehicle* means a vehicle with wheels or tracks that is designed primarily for operation on land and secondarily for operation in water.

* * * * *

*Marine engine* means a nonroad engine that is installed or intended to be

installed on a marine vessel. This includes a portable auxiliary marine engine only if its fueling, cooling, or exhaust system is an integral part of the vessel. There are two kinds of marineengines:

(1) Propulsion marine engine means a marine engine that moves a vessel through the water or directs the vessel's movement.

(2) Auxiliary marine engine means a marine engine not used for propulsion.

*Marine vessel* has the meaning given in 1 U.S.C. 3, except that it does not include amphibious vehicles. The definition in 1 U.S.C. 3 very broadly includes every craft capable of being used as a means of transportation on water.

* * * * *

*United States* means the States, the District of Columbia, the Commonwealth of Puerto Rico, the Commonwealth of the Northern Mariana Islands, Guam, American Samoa, and the U.S. Virgin Islands.

* * * * *

■ 174. Section 94.9 is amended by revising paragraph (a)(3) to read as follows:

**§ 94.9 Compliance with emission standards.**

(a) * * *

(3) Manufacturers may request in the application for certification that we approve a shorter useful life for an engine family. We may approve a shorter useful life, in hours of engine operation but not in years, if we determine that these engines will rarely operate longer than the shorter useful life. If engines identical to those in the engine family have already been produced and are in use, the demonstration must include documentation from such in-use engines. In other cases, the demonstration must include an engineering analysis of information equivalent to such in-use data, such as data from research engines or similar engine models that are already in production. The demonstration must also include recommended overhaul intervals, any mechanical warranty offered for the engine or its components, and any relevant customer design specifications. The demonstration may include any other relevant information. The useful life value may not be shorter than any of the following:

(i) 1,000 hours of operation.

(ii) The recommended overhaul interval.

(iii) The mechanical warranty for the engine.

* * * * *

■ 175. Section 94.12 is amended by revising paragraph (h) to read as follows:

**§ 94.12 Interim provisions.**

* * * * *

(h) *Flexibility for small-volume boat builders.* Notwithstanding the other provisions of this part, manufacturers may sell uncertified recreational engines to small-volume boat builders during the first five years for which the emission standards in § 94.8 apply, subject to the following provisions:

(1) The U.S.-directed production volume of boats from any small-volume boat builder using uncertified engines during the total five-year period may not exceed 80 percent of the manufacturer's average annual production for the three years prior to the general applicability of the recreational engine standards in § 94.8, except as allowed in paragraph (h)(2) of this section.

(2) Small-volume boat builders may exceed the production limits in paragraph (h)(1) of this section, provided they do not exceed 20 boats during the five-year period or 10 boats in any single calendar year. This does not apply to boats powered by engines with displacement greater than 2.5 liters per cylinder.

(3) Small-volume boat builders must keep records of all the boats and engines produced under this paragraph (h), including boat and engine model numbers, serial numbers, and dates of manufacture. Records must also include information verifying compliance with the limits in paragraph (h)(1) or (2) of this section. Keep these records until at least two full years after you no longer use the provisions in this paragraph (h).

(4) Manufacturers must add a permanent, legible label, written in block letters in English, to a readily visible part of each engine exempted under this paragraph (h).

This label must include at least the following items:

(i) The label heading ''EMISSION CONTROL INFORMATION''.

(ii) Your corporate name and trademark.

(iii) Engine displacement (in liters), rated power, and model year of the engine or whom to contact for further information.

(iv) The statement ''THIS ENGINE IS EXEMPT UNDER 40 CFR 94.12(h)

FROM EMISSION STANDARDS AND RELATED REQUIREMENTS.''.

■ 176. Section 94.105 is amended by revising paragraph (b) before the table to read as follows:

**§ 94.105 Duty cycles.**

* * * * *

(b) *General cycle.* Propulsion engines that are used with (or intended to be used with) fixed-pitch propellers, propeller-law auxiliary engines, and any other engines for which the other duty cycles of this section do not apply, shall be tested using the duty cycle described in the following Table B–1:

* * * * *

■ 177. Section 94.106 is amended by revising paragraph (b)(3)(i) to read as follows:

**§ 94.106 Supplemental test procedures for Category 1 and Category 2 marine engines.**

* * * * *

(b) * * *

(3) * * *

(i) The Not to Exceed zone is the region above the curve power = $0.85SPD^4$, excluding all operation below 25% of maximum power at rated speed and excluding all operation below 63% of maximum test.

* * * * *

■ 178. Section 94.107 is amended by revising paragraph (b) to read as follows:

**§ 94.107 Determination of maximum test speed.**

* * * * *

(b) *Generation of lug curve.* Prior to beginning emission testing, generate maximum measured brakepower versus engine speed data points using the applicable method specified in 40 CFR 1065.510. These data points form the lug curve. It is not necessary to generate the entire lug curve. For the portion of the curve where power increases with increasing speed, it is not necessary to generate points with power less than 90 percent of the maximum power value. For the portion of the curve where power decreases with increasing speed, it is not necessary to generate points with power less than 75 percent of the maximum power value.

* * * * *

■ 179. Section 94.109 is amended by revising paragraph (b) to read as follows:

**§ 94.109 Test procedures for Category 3 marine engines.**

* * * * *

(b) Analyzers meeting the specifications of either 40 CFR part 1065, subpart C, or ISO 8178–1 (incorporated by reference in § 94.5) shall be used to measure THC and CO.

* * * * *

■ 180. Section 94.211 is amended by revising paragraph (k) to read as follows:

**§ 94.211 Emission-related maintenance instructions for purchasers.**

* * * * *

(k) For Category 3 engines, the manufacturer must provide the ultimate purchaser with a Technical File meeting the specifications of section 2.4 of the

Annex VI Technical Code(incorporated by reference in § 94.5). The maintenance instructions required by this part to be provided by manufacturer may be included in this Technical File. The manufacturer must provide a copy of this Technical File to EPA upon request.

* * * * *

■ 181. Section 94.212 is amended by revising paragraph (b)(6) and (b)(7) to read as follows:

**§ 94.212 Labeling.**

* * * * *

(b) * * *

(6) A prominent unconditional statement of compliance with U.S. Environmental Protection Agency regulations that apply to marine compression-ignition engines.

(7) The useful life of the engine, unless the applicable useful life is based on the provisions of § 94.9(a)(1).

* * * * *

■ 182. A new § 94.806 is added to read as follows:

**§ 94.806 Importation of partially complete engines.**

The provisions of 40 CFR 1068.330 apply for importation of partially complete engines, or engines that will be modified for applications other than those covered by this part 94.

■ 183. Section 94.904 is amended by revising paragraph (a) and adding a new paragraph (c) to read as follows:

**§ 94.904 Exemptions.**

(a) Except as specified otherwise in this subpart, the provisions of §§ 94.904 through 94.913 exempt certain new engines from the standards, other requirements, and prohibitions of this part, except for the requirements of this subpart and the requirements of § 94.1104. Additional requirements may apply for imported engines; these are described in subpart I of this part.

* * * * *

(c) If you want to take an action with respect to an exempted or excluded engine that is prohibited by the exemption or exclusion, such as selling it, you need to certify the engine. We will issue a certificate of conformity if you send us an application for certification showing that you meet all the applicable requirements from this part 94 and pay the appropriate fee. Also, in some cases, we may allow manufacturers to modify the engine as needed to make it identical to engines already covered by a certificate. We would base such an approval on our review of any appropriate documentation. Theseengines must have emission control information labels that accurately describe their status.

■ 184. Section 94.907 is revised to read as follows:

**§ 94.907 Engine dressing exemption.**

(a) *General provisions.* If you are an engine manufacturer, this section allows you to introduce new marine engines into commerce if they are already certified to the requirements that apply to compression-ignition engines under 40 CFR parts 85 and 86 or 40 CFR part 89, 92 or 1039 for the appropriate model year. If you comply with all the provisions of this section, we consider the certificate issued under 40 CFR part 86, 89, 92, or 1039 for each engine to also be a valid certificate of conformity under this part 94 for its model year, without a separate application for certification under the requirements of this part 94.

(b) *Boat-builder provisions.* If you are not an engine manufacturer, you may install an engine certified for the appropriate model year under 40 CFR part 86, 89, 92, or 1039 in a marine vessel as long as you do not make any of the changes described in paragraph(d)(3) of this section and you meet the requirements of paragraph (e) of this section. If you modify the non-marine engine in any of the ways described in paragraph (d)(3) of this section, we will consider you a manufacturer of a new marine engine. Such engine modifications prevent you from using the provisions of this section.

(c) *Liability.* Engines for which you meet the requirements of this section are exempt from all the requirements and prohibitions of this part, except for those specified in this section. Engines exempted under this section must meet all the applicable requirements from 40 CFR parts 85 and 86 or 40 CFR part 89, 92, or 1039. This paragraph (c) applies to engine manufacturers, boat builders who use such an engine, and all other persons as if the engine were used in its originally intended application. The prohibited acts of § 94.1103(a)(1) apply to these new engines and vessels; however, we consider the certificate issued under 40 CFR part 86, 89, 92, or 1039 for each engine to also be a valid certificate of conformity under this part 94 for its model year. If we make a determination that these engines do not conform to the regulations during their useful life, we may require you to recall them under this part 94 or under 40 CFR part 85, 89, 92, or 1039.

(d) *Specific requirements.* If you are an engine manufacturer and meet all the following criteria and requirements regarding your new marine engine, the engine is eligible for an exemption under this section:

(1) You must produce it by marinizing an engine covered by a valid certificate of conformity from one of the following programs:

(i) Heavy-duty highway engines (40 CFR part 86).

(ii) Land-based nonroad diesel engines (40 CFR part 89 or 1039).

(iii) Locomotive engines (40 CFR part 92).

(2) The engine must have the label required under 40 CFR part 86, 89, 92, or 1039.

(3) You must not make any changes to the certified engine that could reasonably be expected to increase its emissions. For example, if you make any of the following changes to one of these engines, you do not qualify for the engine dressing exemption:

(i) Change any fuel system parameters from the certified configuration, or change, remove, or fail to properly install any other component, element of design, or calibration specified in the engine manufacturer's application for certification. This includes aftertreatment devices and all related components.

(ii) Replacing an original turbocharger, except that small-volume manufacturers of recreational engines may replace an original turbocharger with one that matches the performance of the original turbocharger.

(iii) Modify or design the marine engine cooling or aftercooling system so that temperatures or heat rejection rates are outside the original engine manufacturer's specified ranges.

(4) You must show that fewer than 50 percent of the engine family's total sales in the United States are used in marine applications. This includes engines used in any application, without regard to which company manufactures the vessel orequipment. Show this as follows:

(i) If you are the original manufacturer of the engine, base this showing on your sales information.

(ii) In all other cases, you must get the original manufacturer of the engine to confirm this based on its sales information.

(e) If you are an engine manufacturer or boat builder using this exemption, you must do all of the following:

(1) Make sure the original engine label will remain clearly visible after installation in the vessel.

(2) Add a permanent supplemental label to the engine in a position where it will remain clearly visible after installation in the vessel. In your engine label, do the following:

(i) Include the heading: ''Marine Engine Emission Control Information''.

(ii) Include your full corporate name and trademark.

(iii) State: ''This engine was marinized without affecting its emission controls.''

(iv) State the date you finished marinizing the engine (month and year).

(3) Send a signed letter to the Designated Officer by the end of each calendar year (or less often if we tell you) with all the following information:

(i) Identify your full corporate name, address, and telephone number.

(ii) List the engine models for which you expect to use this exemption in the coming year and describe your basis for meeting the sales restrictions of paragraph (d)(4) of this section.

(iii) State: ''We prepare each listed engine model for marine application without making any changes that could increase its certified emission levels, as described in 40 CFR 94.907.''

(f) *Engine inventories.* In general you may use up your inventory of engines that are not certified to new marine emission standards if they were originally manufactured before the date of the new standards. However, stockpiling these engines is a violation of § 94.1103(a)(1)(i)(A).

(g) *Failure to comply.* If your engines do not meet the criteria listed in paragraph (d) of this section, they will be subject to the standards, requirements, and prohibitions of this part 94 and the certificate issued under 40 CFR part 86, 89, 92, or 1039 will not be deemed to also be a certificate issued under this part 94. Introducing these engines into commerce without a valid exemption or certificate of conformity under this part violates the prohibitions in 40 CFR 94.1103(a)(1).

(h) *Data submission.* (1) If you are the original manufacturer and marinizer of an exempted engine, you must send us emission test data on the appropriate marine duty cycles. You can include the data in your application for certification or in the letter described in paragraph (e)(3) of this section.

(2) If you are the original manufacturer of an exempted engine that is marinized by a post-manufacture marinizer, you may be required to send us emission test data on the appropriate marine duty cycles. If such data are requested you will be allowed a reasonable amount of time to collect the data.

(i) *Participation in averaging, banking and trading.* Engines adapted for marine use under this section may not generate or use emission credits under this part 94. These engines may generate credits under the ABT provisions in 40 CFR part 86, 89, 92, or 1039, as applicable. These engines must use emission credits under 40 CFR part 86, 89, 92, or 1039 as applicable if they are certified to an FEL that exceeds an applicable standard.

(j) *Operator requirements.* The requirements for vessel manufacturers, owners, and operators in subpart K of this part apply to these engines whether they are certified under this part 94 or another part as allowed by this section.

■ 185. A new § 94.912 is added to subpart J to read as follows:

**§ 94.912 Optional certification to land-based standards for auxiliary marine engines.**

This section applies to auxiliary marine engines that are identical to certified land-based engines. See § 94.907 for provisions that apply to propulsion marine engines or auxiliary marine engines that are modified for marine applications.

(a) *General provisions.* If you are an engine manufacturer, this section allows you to introduce new marine engines into commerce if they are already certified to the requirements that apply to compression-ignition engines under 40 CFR part 89 or 1039 for the appropriate model year. If you comply with all the provisions of this section, we consider the certificate issued under 40 CFR part 86 or 1039 for each engine to also be a valid certificate of conformity under this part 94 for its model year, without a separate application for certification under the requirements of this part 94.

(b) *Boat builder provisions.* If you are not an engine manufacturer, you may install an engine certified for land-based applications in a marine vessel as long as you meet all the qualifying criteria and requirements specified in paragraphs (d) and (e) of this section. If you modify the non-marine engine, we will consider you a manufacturer of a new marine engine. Such engine modifications prevent you from using the provisions of this section.

(c) *Liability.* Engines for which you meet the requirements of this section are exempt from all the requirements and prohibitions of this part, except for those specified in this section. Engines exempted under this section must meet all the applicable requirements from 40 CFR part 89 or 1039. This paragraph (c) applies to engine manufacturers, boat builders who use such an engine, and all other persons as if the engine were used in its originally intended application. The prohibited acts of § 94.1103(a)(1) apply to these new engines and vessels; however, we consider the certificate issued under 40 CFR part 89 or 1039 for each engine to also be a valid certificate of conformity under this part 94 for its model year. If we make a determination that these engines do not conform to the regulations during their useful life, we may require you to recall them under this part 94 or under 40 CFR part 89 or 1068.

(d) *Qualifying criteria.* If you are an engine manufacturer and meet all the following criteria and requirements regarding your new marine engine, the engine is eligible for an exemption under this section:

(1) The marine engine must be identical in all material respects to a land-based engine covered by a valid certificate of conformity for the appropriate model year showing that it meets emission standards for engines of that power rating under 40 CFR part 89 or 1039.

(2) The engines may not be used as propulsion marine engines.

(3) You must show that the number of auxiliary marine engines from the engine family must be smaller than the number of land-based engines from the engine family sold in the United States, as follows:

(i) If you are the original manufacturer of the engine, base this showing on your sales information.

(ii) In all other cases, you must get the original manufacturer of the engine to confirm this based on its sales information.

(e) *Specific requirements.* If you are an engine manufacturer or boat builder using this exemption, you must do all of the following:

(1) Make sure the original engine label will remain clearly visible after installation in the vessel. This label or a supplemental label must identify that the original certification is valid for marine auxiliary applications.

(2) Send a signed letter to the Designated Officer by the end of each calendar year (or less often if we tell you) with all the following information:

(i) Identify your full corporate name, address, and telephone number.

(ii) List the engine models you expect to produce under this exemption in the coming year.

(iii) State: ''We produce each listed engine model for marine application without making any changes that could increase its certified emission levels, as described in 40 CFR 94.907.''

(3) If you are the certificate holder, you must describe in your application for certification how you plan to produce engines for both land-based and auxiliary marine applications, including projected sales of auxiliary marine engines to the extent this can be determined. If the projected marine sales are substantial, we may ask for the

year-end report of production volumes to include actual auxiliary marine engine sales.

(f) *Failure to comply.* If your engines do not meet the criteria listed in paragraph (d) of this section, they will be subject to the standards, requirements, and prohibitions of this part 94 and the certificate issued under 40 CFR part 89 or 1039 will not be deemed to also be a certificate issued under this part 94. Introducing these engines into commerce without a valid exemption or certificate of conformity under this part violates the prohibitions in 40 CFR 94.1103(a)(1).

(g) *Participation in averaging, banking and trading.* Engines using this exemption may not generate or use emission credits under this part 94. These engines may generate credits under the ABT provisions in 40 CFR part 89 or 1039, as applicable. These engines must use emission credits under 40 CFR part 89 or 1039 as applicable if they are certified to an FEL that exceeds an applicable standard.

(h) *Operator requirements.* The requirements for vessel manufacturers, owners, and operators in subpart K of this part apply to these engines whether they are certified under this part 94 or another part as allowed by this section.

■ 186. A new § 94.913 is added to subpart J to read as follows:

**§ 94.913 Staged-assembly exemption.**

You may ask us to provide a temporary exemption to allow you to complete production of your engines at different facilities, as long as you maintain control of the engines until they are in their certified configuration. We may require you to take specific steps to ensure that such engines are in their certified configuration before reaching the ultimate purchaser. You may request an exemption under this section in your application for certification, or in a separate submission to the Designated Officer.

■ 187. Section 94.1004 is amended by revising paragraphs (b) and (c) introductory text to read as follows:

**§ 94.1004 Maintenance, repair, adjustment, and recordkeeping.**

* * * * *

(b) Unless otherwise approved by the Administrator, all maintenance, repair, adjustment,and alteration of Category 3 engines subject to the provisions of this part performed by any owner, operator or other maintenance provider that is not covered by paragraph (a) of this section shall be performed, using good engineering judgment, in such a manner that the engine continues (after the maintenance, repair, adjustment or alteration) to meet the emission standards it was certified as meeting prior to the need for service. Adjustmentsare limited to the range specified by the engine manufacturer in the approved application for certification.

(c) A Category 3 engine may not be adjusted or altered contrary to the requirements of § 94.11 or paragraph (b) of this section, except as allowed by § 94.1103(b)(2). If such an adjustment or alteration occurs, the engine must be returned to a configuration allowed by this part within two hours of operation. Each two-hour period during which there is noncompliance is a separate violation. The following provisions apply to adjustments oralterations made under § 94.1103(b)(2):

* * * * *

■ 188. Section 94.1103 is amended by revising paragraph (b)(3) and adding paragraphs (a)(8) and (b)(4) to read as follows:

**§ 94.1103 Prohibited acts.**

(a) * * *

(8) For an owner or operator of a vessel installing a replacement engine under the provisions of paragraph (b)(4) of this section to make modifications to significantly increase the value of the vessel within six months after installing the replacement engine.

(b) * * *

(3) Where the Administrator determines that no engine that is certified to the requirements of this part is produced by any manufacturer with the appropriate physical or performance characteristics to repower a vessel, the Administrator may allow an engine manufacturer to introduce into commerce a replacement engine without complying with all of the otherwise applicable requirements of this part. Such engine shall not be subject to the prohibitions of paragraph (a)(1) of this section, subject to all the following provisions:

(i) The engine requiring replacement is not certified or is certified to emission standards that are less stringent than those in effect when the replacement engine is built.

(ii) The engine manufacturer or its agent takes ownership and possession of the engine being replaced or confirms that the engine has been destroyed.

(iii) If the engine being replaced was not certified to any emission standards under this part, the replacement engine must have a permanent label with your corporate name and trademark and the following language, or similar alternate language approved by the Administrator:

THIS ENGINE DOES NOT COMPLY WITH U.S. EPA MARINE EMISSION REQUIREMENTS. SELLING OR INSTALLING THIS ENGINE FOR ANY PURPOSE OTHER THAN TO REPLACE A MARINE ENGINE BUILT BEFORE JANUARY 1, [Insert appropriate year reflecting when the earliest tier of standards began to apply to engines of that size and type] MAY BE A VIOLATION OF FEDERAL LAW SUBJECT TO CIVIL PENALTY.

(iv) If the engine being replaced was certified to emission standards less stringent than those in effect when you produce the replacement engine, the replacement engine must have a permanent label with your corporate name and trademark and the following language, or similar alternate language approved by the Administrator:

THIS ENGINE COMPLIES WITH U.S. EPA MARINE EMISSION REQUIREMENTS FOR [Insert appropriate year reflecting when the Tier 1 or Tier 2 standards for the replaced engine began to apply] ENGINES UNDER 40 CFR 94.1103(b)(3). SELLING OR INSTALLING THIS ENGINE FOR ANY PURPOSE OTHER THAN TO REPLACE A MARINE ENGINEBUILT BEFORE JANUARY 1, [Insert appropriate year reflecting when the next tier of emission standards began to apply] MAY BE A VIOLATION OF FEDERAL LAW SUBJECT TO CIVIL PENALTY.

(v) Where the replacement engine is intended to replace an engine that is certified to emission standards that are less stringent than those in effect when the replacement engine is built, the replacement engine shall be identical in all material respects to a certified configuration of the same or later model year as the engine being replaced.

(vi) Engines sold pursuant to the provisions of this paragraph will neither generate nor use emission credits and will not be part of any accounting under the averaging, banking and trading program.

(vii) In cases where an engine is to be imported for replacement purposes under the provisions of this paragraph (b)(3) of this section, the term ''engine manufacturer'' shall not apply to an individual or other entity that does not possess a current Certificate of Conformity issued by EPA under this part; and

(viii) The provisions of this section may not be used to circumventemission standards that apply to new engines under this part.

(4) An engine manufacturer may make the determination related to replacement engines described in paragraph (b)(3) of this section instead

of the Administrator, if the new engine is needed to replace an engine that has experienced catastrophic failure. The engine manufacturer must consider whether certified engines are available from its own product lineup or that of the manufacturer of the engine being replaced (if different). The engine manufacturer must keep records explaining why a certified engine was not available and make these records available upon request.

■ 189. Section 94.1106 is amended by revising the introductory text and paragraphs (a)(1), (a)(2), (c)(1), and (d) to read as follows:

**§ 94.1106 Penalties.**

This section specifies actions that are prohibited and the maximum civil penalties that we can assess for each violation. The maximum penalty values listed in paragraphs (a) and (c) of this section are shown for calendar year 2004. As described in paragraph (d) of this section, maximum penalty limits for later years are set forth in 40 CFR part 19.

(a) * * *

(1) A person who violates § 94.1103(a)(1), (a)(4), (a)(5), (a)(6), or (a)(7)(iv) or a manufacturer or dealer who violates § 94.1103(a)(3)(i) or (iii) or § 94.1103(a)(7) is subject to a civil penalty of not more than $32,500 for each violation.

(2) A person other than a manufacturer or dealer who violates § 94.1103(a)(3)(i) or (iii) or§ 94.1103(a)(7)(i), (ii), or (iii) or any person who violates § 94.1103(a)(3)(ii) is subject to a civil penalty of not more than $2,750 for each violation.

* * * * *

(c) * * *

(1) Administrative penalty authority. Subject to 42 U.S.C. 7524(c), in lieu of commencing a civil action under paragraph (b) of this section, the Administrator may assess any civil penalty prescribed in paragraph (a) of this section, except that the maximum amount of penalty sought against each violator in a penalty assessment proceeding shall not exceed $270,000, unless the Administrator and the Attorney General jointly determine that a matter involving a larger penalty amount is appropriate for administrative penalty assessment. Any such determination by the Administrator and the Attorney General is not subject to judicial review. Assessment of a civil penalty shall be by an order made on the record after opportunity for a hearing held in accordance with the procedures found at part 22 of this chapter. The Administrator may compromise, or remit, with or without conditions, any administrative penalty which may be imposed under this section.

* * * * *

(d) The maximum penalty values listed in paragraphs (a) and (c) of this section are shown for calendar year 2004. Maximum penalty limits for later years may be adjusted based on the Consumer Price Index. The specific regulatory provisions for changing the maximum penalties, published in 40 CFR part 19, reference the applicable U.S. Code citation on which the prohibited action is based.

## PART 1039—CONTROL OF EMISSIONS FROM NEW AND IN-USE NONROADCOMPRESSION-IGNITION ENGINES

■ 190. The authority citation for part 1039 is revised to read as follows:

**Authority:** 42 U.S.C. 7401–7671q.

■ 191. Section 1039.1 is amended by revising paragraph (c) to read as follows:

**§ 1039.1 Does this part apply for my engines?**

* * * * *

(c) The definition of nonroad engine in 40 CFR 1068.30 excludes certain engines used in stationary applications. These engines are not required to comply with this part, except for the requirements in § 1039.20. In addition, if these engines are uncertified, the prohibitions in 40 CFR 1068.101 restrict their use as nonroad engines.

* * * * *

■ 192. Section 1039.5 is amended by revising paragraphs (b)(1)(iii) and (b)(2) to read as follows:

**§ 1039.5 Which engines are excluded from this part's requirements?**

* * * * *

(b) * * *

(1) * * *

(iii) Engines that are exempt from the standards of 40 CFR part 94 pursuant to the provisions of 40 CFR part 94 (except for the provisions of 40 CFR 94.907 or 94.912). For example, an engine that is exempt under 40 CFR 94.906 because it is a manufacturer-owned engine is not subject to the provisions of this part 1039.

* * * * *

(2) Marine engines are subject to the provisions of this part 1039 if they are exempt from 40 CFR part 94 based on the engine-dressing provisions of 40 CFR 94.907 or the common-family provisions of 40 CFR 94.912.

* * * * *

■ 193. Section 1039.10 is amended by revising the introductory text to read as follows:

**§ 1039.10 How is this part organized?**

The regulations in this part 1039 contain provisions that affect both engine manufacturers and others. However, the requirements of this part are generally addressed to the engine manufacturer. The term ''you'' generally means the engine manufacturer, as defined in § 1039.801. This part 1039 is divided into the following subparts:

* * * * *

■ 194. Section 1039.101 is amended by revising paragraph (g)(2) to read as follows:

**§ 1039.101 What exhaust emission standards must my engines meet after the 2014 model year?**

* * * * *

(g) * * *

(2) You may request in your application for certification that we approve a shorter useful life for an engine family. We may approve a shorter useful life, in hours of engine operation but not in years, if we determine that these engines will rarely operate longer than the shorter useful life. If engines identical to those in the engine family have already been produced and are in use, your demonstration must include documentation from such in-use engines. In other cases, your demonstration must include an engineering analysis of information equivalent to such in-use data, such as data from research engines or similar engine models thatare already in production. Your demonstration must also include any overhaul interval that you recommend, any mechanical warranty that you offer for the engine or its components, and any relevant customer design specifications. Your demonstration may include any other relevant information. The useful life value may not be shorter than any of the following:

(i) 1,000 hours of operation.

(ii) Your recommended overhaul interval.

(iii) Your mechanical warranty for the engine.

* * * * *

■ 195. Section 1039.104 is amended by revising paragraph (a)(4)(iii) to read as follows:

**§ 1039.104 Are there interim provisions that apply only for a limited time?**

* * * * *

(a) * * *

(4) * * *

(iii) All other offset-using engines must meet the standards and other provisions that apply in model year 2011 for engines in the 19–130 kW power categories, in model year 2010 for

engines in the 130–560 kW power category, or in model year 2014 for engines above 560 kW. Show that engines meet these emission standards by meeting all the requirements of § 1068.265. You must meet the labeling requirements in § 1039.135, but add the following statement instead of the compliance statement in § 1039.135(c)(12): ''THIS ENGINE MEETS U.S. EPA EMISSIONSTANDARDS UNDER 40 CFR 1039.104(a).'' For power categories witha percentage phase-in, these engines should be treated as phase-in engines for purposes of determining compliance with phase-in requirements.

* * * * *

■ 196. Section 1039.120 is amended by revising paragraph (b) before the table to read as follows:

**§ 1039.120 What emission-related warranty requirements apply to me?**

* * * * *

(b) *Warranty period.* Your emission-related warranty must be valid for at least as long as the minimum warranty periods listed in this paragraph (b) in hours of operation and years, whichever comes first. You may offer an emission-related warranty more generous than we require. The emission-related warranty for the engine may not be shorter than any published warranty you offer without charge for the engine. Similarly, the emission-related warranty for any component may not be shorter than any published warranty you offer without charge for that component. If an engine has no hour meter, we base the warranty periods in this paragraph (b) only on the engine's age (in years). The warranty period begins when the engine is placed into service. The minimum warranty periods are shown in the following table:

* * * * *

■ 197. Section 1039.125 is amended by revising paragraph (g) introductory text to readas follows:

**§ 1039.125 What maintenance instructions must I give to buyers?**

* * * * *

(g) *Payment for scheduled maintenance.* Owners are responsible for properly maintaining their engines. This generally includes paying for scheduled maintenance. However, manufacturers must pay for scheduled maintenance during the useful life if it meets all the following criteria:

* * * * *

■ 198. Section 1039.130 is amended by revising paragraph (b)(3) to read as follows:

**§ 1039.130 What installation instructions must I give to equipment manufacturers?**

* * * * *

(b) * * *

(3) Describe the instructions needed to properly install the exhaust system and any other components. Include instructions consistent with the requirements of § 1039.205(u).

* * * * *

■ 199. Section 1039.225 is amended by revising the section heading and adding paragraphs (a)(3) and (f) to read as follows:

**§ 1039.225 How do I amend my application for certification to include new or modified engines or to change an FEL?**

* * * * *

(a) * * *

(3) Modify an FEL for an engine family, as described in paragraph (f) of this section.

* * * * *

(f) You may ask to change your FEL in the following cases:

(1) You may ask to raise your FEL after the start of production. You may not apply the higher FEL to engines you have already introduced into commerce. Use the appropriate FELs with corresponding sales volumes to calculate your averageemission level, as described in subpart H of this part. In your request, you must demonstrate that you will still be able to comply with the applicable averageemission standards as specified in subparts B and H of this part.

(2) You may ask to lower the FEL for your engine family after the start of production only when you have test data from production engines indicating that your engines comply with the lower FEL. You may create a separate subfamily with the lower FEL. Otherwise, you must use the higher FEL for the family to calculate your average emission level under subpart H of this part.

(3) If you change the FEL during production, you must include the new FEL on the emission control information label for all engines produced after the change.

■ 200. Section 1039.240 is amended by revising paragraphs (a) and (b) to read as follows:

**§ 1039.240 How do I demonstrate that my engine family complies with exhaust emission standards?**

(a) For purposes of certification, your engine family is considered in compliance with the applicable numerical emission standards in § 1039.101(a) and (b), § 1039.102(a) and (b), § 1039.104, and § 1039.105 if all emission-data engines representing that family have test results showing deteriorated emission levels at or below these standards. (Note: if you participate in the ABT program in subpart H of this part, your FELs are considered to be the applicable emission standards with which you must comply.)

(b) Your engine family is deemed not to comply if any emission-data engine representing that family has test results showing a deteriorated emission level above an applicable FEL or emission standard from § 1039.101, § 1039.102, § 1039.104, or § 1039.105 for any pollutant.

* * * * *

**§ 1039.260 [Removed]**

■ 201. Section 1039.260 is removed.

■ 202. Section 1039.501 is amended by revising paragraph (a) to read as follows:

**§ 1039.501 How do I run a valid emission test?**

(a) Use the equipment and procedures for compression-ignition engines in 40 CFR part 1065 to determine whether engines meet the duty-cycle emission standards in § 1039.101(a) and (b). Measure the emissions of all the pollutants we regulate in § 1039.101 as specified in 40 CFR part 1065. Use the applicable duty cycles specified in §§ 1039.505 and 1039.510.

* * * * *

**§ 1039.510 [Amended]**

■ 203. Section 1039.510 is amended by removing paragraphs (c) and (d).

■ 204. Section 1039.605 is amended by revising the section heading and adding paragraph (g) to read as follows:

**§ 1039.605 What provisions apply to engines certified under the motor-vehicle program?**

* * * * *

(g) *Participation in averaging, banking and trading.* Engines adapted for nonroad use under this section may not generate or use emission credits under this part 1039. These engines may generate credits under the ABT provisions in 40 CFR part 86. These engines must use emission credits under 40 CFR part 86 if they are certified to an FEL that exceeds an applicable standard under 40 CFR part 86.

■ 205. Section 1039.610 is amended by revising the section heading and adding paragraph (g) to read as follows:

**§ 1039.610 What provisions apply to vehicles certified under the motor-vehicle program?**

* * * * *

(g) *Participation in averaging, banking and trading.* Vehicles adapted for nonroad use under this section may not generate or use emission credits under

this part 1039. These vehicles may generate credits under the ABT provisions in 40 CFR part 86. These vehicles must be included in the calculation of the applicable fleet average in 40 CFR part 86.

■ 206. Section 1039.625 is amended by revising the last entry in Table 1 and paragraph (j) to read as follows:

**§ 1039.625 What requirements apply under the program for equipment-manufacturer flexibility?**

* * * * *

(a) * * *

(1) * * *

TABLE 1 OF § 1039.625.—GENERAL AVAILABILITY OF ALLOWANCES

| Power category | Calendar years |
|---|---|
| * * * * * * * | |
| kW > 560 | 2011–2017 |

* * * * *

(j) *Provisions for engine manufacturers.* As an engine manufacturer, you may produceexempted engines as needed under this section. You do not have to request thisexemption for your engines, but you must have written assurance from equipment manufacturers that they need a certain number of exempted engines under this section. Send us an annual report of the engines you produce under this section, as described in § 1039.250(a). For engines produced under the provisions of paragraph (a)(2) of this section, you must certify the engines under this part 1039. For all other exempt engines, the engines must meet the emission standards in paragraph (e) of this section and you must meet all the requirements of 40 CFR 1068.265. If you show under 40 CFR 1068.265(c) that the engines are identical in all material respects to engines that you have previously certified to one or more FELs above the standards specified in paragraph (e) of this section, you must supply sufficient credits for these engines. Calculate these credits under subpart H of this part using the previously certified FELs and the alternate standards. You must meet the labeling requirements in 40 CFR 89.110, but add the following statement instead of the compliance statement in 40 CFR 89.110(b)(10):

THIS ENGINE MEETS U.S. EPA EMISSION STANDARDS UNDER 40 CFR 1039.625. SELLING OR INSTALLING THIS ENGINE FOR ANY PURPOSEOTHER THAN FOR THE EQUIPMENT FLEXIBILITY PROVISIONS OF 40CFR 1039.625 MAY BE A VIOLATION OF FEDERAL LAW SUBJECT TOCIVIL PENALTY.

* * * * *

■ 207. Section 1039.655 is amended by revising paragraph (a)(3) to read as follows:

**§ 1039.655 What special provisions apply to engines sold in Guam, American Samoa, or the Commonwealth of the Northern Mariana Islands?**

(a) * * *

(3) You meet all the requirements of 40 CFR 1068.265.

* * * * *

■ 208. Section 1039.740 amended by adding paragraph (b)(4) to read as follows:

**§ 1039.740 What restrictions apply for using emission credits?**

* * * * *

(b) * * *

(4) If the maximum power of an engine generating credits under the Tier 2 standards in 40 CFR part 89 is at or above 37 kW and below 75 kW, you may use those credits for certifying engines under the Option #1 standards in § 1039.102.

* * * * *

■ 209. Section 1039.801 is amended by revising the definitions for *Aftertreatment*, *Brake power*, *Constant-speed operation*, *Exempted*, *Good engineering judgment*, *Marineengine*, *Marine vessel*, *Maximum test speed*, *Motor vehicle*, *Revoke*, *Suspend*,*United States*, and *Void* and adding a definition for *Amphibious vehicle* to read as follows:

**§ 1039.801 What definitions apply to this part?**

* * * * *

*Aftertreatment* means relating to a catalytic converter, particulate filter, or any other system, component, or technology mounted downstream of the exhaust valve (orexhaust port) whose design function is to decrease emissions in the engine exhaust before it is exhausted to the environment. Exhaust-gas recirculation (EGR) and turbochargers are not aftertreatment.

* * * * *

*Amphibious vehicle* means a vehicle with wheels or tracks that is designed primarily for operation on land and secondarily for operation in water.

* * * * *

*Brake power* means the usable power output of the engine, not including power required to fuel, lubricate, or heat the engine, circulate coolant to the engine, or to operateaftertreatment devices.

* * * * *

*Constant-speed operation* means engine operation with a governor that controls the operator input to maintain an engine at a reference speed, even under changing load. For example, an isochronous governor changes reference speed temporarily during a load change, then returns the engine to its original reference speed after the engine stabilizes. Isochronous governors typically allow speed changes up to 1.0%. Another example is a speed-droop governor, which has a fixed reference speed at zero load and allows the reference speed to decrease as load increases. With speed-droop governors, speed typically decreases (3 to 10)% below the reference speed at zero load, such that the minimum reference speed occurs near the engine's point of maximum power.

* * * * *

*Exempted* has the meaning we give in 40 CFR 1068.30.

* * * * *

*Good engineering judgment* has the meaning we give in 40 CFR 1068.30. See 40 CFR 1068.5 for the administrative process we use to evaluate good engineering judgment.

* * * * *

*Marine engine* means a nonroad engine that is installed or intended to be installed on a marine vessel. This includes a portable auxiliary marine engine only if its fueling, cooling, or exhaust system is an integral part of the vessel. There are two kinds of marineengines:

(1) Propulsion marine engine means a marine engine that moves a vessel

through the water or directs the vessel's movement.

(2) Auxiliary marine engine means a marine engine not used for propulsion.

*Marine vessel* has the meaning given in 1 U.S.C. 3, except that it does not include amphibious vehicles. The definition in 1 U.S.C. 3 very broadly includes every craft capable of being used as a means of transportation on water.

* * * * *

*Maximum test speed* has the meaning we give in 40 CFR 1065.1001.

* * * * *

*Motor vehicle* has the meaning we give in 40 CFR 85.1703(a).

* * * * *

*Revoke* has the meaning we give in 40 CFR 1068.30.

* * * * *

*Suspend* has the meaning we give in 40 CFR 1068.30.

* * * * *

*United States* has the meaning we give in 40 CFR 1068.30.

* * * * *

*Void* has the meaning we give in 40 CFR 1068.30.

* * * * *

■ 210. Appendix VI to part 1039 is amended in the table by adding a footnote to read as follows:

**Appendix VI to Part 1039—Nonroad Compression-Ignition Composite TransientCycle**

| Time(s) | Normalized speed (percent) | Normalized torque (percent)[1] |
|---|---|---|
| * * | * * | * * |

[1] The percent torque is relative to maximum torque at the commanded engine speed.

## PART 1048—CONTROL OF EMISSIONS FROM NEW, LARGE NONROAD SPARK-IGNITION ENGINES

■ 211. The authority citation for part 1048 is revised to read as follows:

**Authority:** 42 U.S.C. 7401—7671q.

■ 212. The heading for subpart A is revised to read as follows:

### Subpart A—Overview and Applicability

■ 213. Section 1048.1 is revised to read as follows:

#### § 1048.1 Does this part apply to me?

(a) The regulations in this part 1048 apply for all new, spark-ignition nonroad engines (defined in § 1048.801) with maximum engine power above 19 kW, except as provided in § 1048.5.

(b) This part 1048 applies for engines built on or after January 1, 2004. You need not follow this part for engines you produce before January 1, 2004. *See* §§ 1048.101 through 1048.115, § 1048.145, and the definition of model year in § 1048.801 for more information about the timing of new requirements.

(c) The definition of nonroad engine in 40 CFR 1068.30 excludes certain engines used in stationary applications. These engines are not required to comply with this part, except for the requirements in § 1048.20. In addition, if these engines are uncertified, the prohibitions in 40 CFR 1068.101 restrict their use as nonroad engines.

(d) In certain cases, the regulations in this part 1048 apply to engines with maximum engine power at or below 19 kW that would otherwise be covered by 40 CFR part 90. *See* 40 CFR 90.913 for provisions related to this allowance.

■ 214. Section 1048.5 is revised to read as follows:

#### § 1048.5 Which engines are excluded from this part's requirements?

This part does not apply to the following nonroad engines:

(a) Engines that are certified to meet the requirements of 40 CFR part 1051, or are otherwise subject to 40 CFR part 1051 (for example, engines used in snowmobiles and all-terrain vehicles).

(b) *Propulsion marine engines. See* 40 CFR part 91. This part applies with respect to auxiliary marine engines.

■ 215. Section 1048.10 is revised to read as follows:

#### § 1048.10 How is this part organized?

The regulations in this part 1048 contain provisions that affect both engine manufacturers and others. However, the requirements of this part are generally addressed to the engine manufacturer. The term ''you'' generally means the engine manufacturer, as defined in § 1048.801. This part 1048 is divided into the following subparts:

(a) Subpart A of this part defines the applicability of part 1048 and gives an overview of regulatory requirements.

(b) Subpart B of this part describes the emission standards and other requirements that must be met to certify engines under this part. Note that § 1048.145 discusses certain interim requirements and compliance provisions that apply only for a limited time.

(c) Subpart C of this part describes how to apply for a certificate of conformity.

(d) Subpart D of this part describes general provisions for testing production-line engines.

(e) Subpart E of this part describes general provisions for testing in-use engines.

(f) Subpart F of this part describes how to test your engines (including references to other parts of the Code of Federal Regulations).

(g) Subpart G of this part and 40 CFR part 1068 describe requirements, prohibitions, and other provisions that apply to engine manufacturers, equipment manufacturers, owners, operators, rebuilders, and all others.

(h) [Reserved]

(i) Subpart I of this part contains definitions and other reference information.

■ 216. Section 1048.15 is revised to read as follows:

#### § 1048.15 Do any other regulation parts affect me?

(a) Part 1065 of this chapter describes procedures and equipment specifications for testing engines. Subpart F of this part 1048 describes how to apply the provisions of part 1065 of this chapter to determine whether engines meet the emission standards in this part.

(b) The requirements and prohibitions of part 1068 of this chapter apply to everyone, including anyone who manufactures, imports, installs, owns, operates, or rebuilds any of the engines subject to this part 1048, or equipment containing these engines. Part 1068 of this chapter describes general provisions, including these seven areas:

(1) Prohibited acts and penalties for engine manufacturers, equipment manufacturers, and others.

(2) Rebuilding and other aftermarket changes.

(3) Exclusions and exemptions for certain engines.

(4) Importing engines.

(5) Selective enforcement audits of your production.

(6) Defect reporting and recall.

(7) Procedures for hearings.

(c) Other parts of this chapter apply if referenced in this part.

■ 217. Section 1048.20 is revised to read as follows:

**§ 1048.20 What requirements from this part apply to excluded stationary engines?**

(a) You must add a permanent label or tag to each new engine you produce or import that is excluded under § 1048.1(c) as a stationary engine. To meet labeling requirements, you must do the following things:

(1) Attach the label or tag in one piece so no one can remove it without destroying or defacing it.

(2) Secure it to a part of the engine needed for normal operation and not normally requiring replacement.

(3) Make sure it is durable and readable for the engine's entire life.

(4) Write it in English.

(5) Follow the requirements in § 1048.135(g) regarding duplicate labels if the engine label is obscured in the final installation.

(b) Engine labels or tags required under this section must have the following information:

(1) Include the heading ''EMISSION CONTROL INFORMATION''.

(2) Include your full corporate name and trademark. You may instead include the full corporate name and trademark of another company you choose to designate.

(3) State the engine displacement (in liters) and maximum engine power.

(4) State: ''THIS ENGINE IS EXCLUDED FROM THE REQUIREMENTS OF 40 CFR PART 1048 AS A ''STATIONARY ENGINE.'' INSTALLING ORUSING THIS ENGINE IN ANY OTHER APPLICATION MAY BE AVIOLATION OF FEDERAL LAW SUBJECT TO CIVIL PENALTY.''.

■ 218. Section 1048.101 is amended by revising the introductory text and paragraphs (a), (b), (c), (e), (g), and (h) to read as follows:

**§ 1048.101 What exhaust emission standards must my engines meet?**

The exhaust emission standards of this section apply by model year. You may certify engines earlier than we require. The Tier 1 standards apply only to steady-state testing, as described in paragraph (b) of this section. The Tier 2 standards apply to steady-state, transient, and field testing, as described in paragraphs (a), (b), and (c) of this section.

(a) *Emission standards for transient testing.* Starting in the 2007 model year, transient exhaust emissions from your engines may not exceed the Tier 2 emission standards, as follows:

(1) Measure emissions using the applicable transient test procedures described in subpart F of this part.

(2) The Tier 2 $HC+NO_X$ standard is 2.7 g/kW-hr and the Tier 2 CO standard is 4.4 g/kW-hr. For severe-duty engines, the Tier 2 $HC+NO_X$ standard is 2.7 g/kW-hr and the Tier 2 CO standard is 130.0 g/kW-hr. The following engines are not subject to the transient standards in this paragraph (a):

(i) High-load engines.

(ii) Engines with maximum engine power above 560 kW.

(iii) Engines with maximum test speed above 3400 rpm.

(3) You may optionally certify your engines according to the following formula instead of the standards in paragraph (a)(1) of this section: $(HC+NO_X) \times CO^{0.784} \leq 8.57$. The $HC+NO_X$ and CO emission levels you select to satisfy this formula, rounded to the nearest 0.1 g/kW-hr, become the emission standards that apply for those engines. You may not select an $HC+NO_X$ emission standard higher than 2.7 g/kW-hr or a CO emission standard higher than 20.6 g/kW-hr. The following table illustrates a range of possible values under this paragraph (a)(3):

TABLE 1 OF § 1048.101.—EXAMPLES OF POSSIBLE TIER 2 DUTY-CYCLE EMISSION STANDARDS

| $HC+NO_X$ (g/kW-hr) | CO (g/kW-hr) |
|---|---|
| 2.7 | 4.4 |
| 2.2 | 5.6 |
| 1.7 | 7.9 |
| 1.3 | 11.1 |
| 1.0 | 15.5 |
| 0.8 | 20.6 |

(b) *Standards for steady-state testing.* Except as we allow in paragraph (d) of this section, steady-state exhaust emissions from your engines may not exceed emission standards, as follows:

(1) Measure emissions using the applicable steady-state test procedures described in subpart F of this part:

(2) The following table shows the Tier 1 exhaust emission standards that apply to engines from 2004 through 2006 model years:

TABLE 2 OF § 1048.101.—TIER 1 EMISSION STANDARDS (G/KW–HR)

| Testing | General emission standards | | Alternate emission standards for severe-duty engines | |
|---|---|---|---|---|
| | $HC+NO_X$ | CO | $HC+NO_X$ | CO |
| Certification and production-line testing | 4.0 | 50.0 | 4.0 | 130.0 |
| In-use testing | 5.4 | 50.0 | 5.4 | 130.0 |

(3) Starting in the 2007 model year, steady-state exhaust emissions from your engines may not exceed the numerical emission standards in paragraph (a) of this section. See paragraph (d) of this section for alternate standards that apply for certain engines.

(c) *Standards for field testing.* Starting in 2007, exhaust emissions may not exceed field-testing standards, as follows:

(1) Measure emissions using the field-testing procedures in subpart F of this part:

(2) The $HC+NO_X$ standard is 3.8 g/kW-hr and the CO standard is 6.5 g/kW-hr. For severe-duty engines, the $HC+NO_X$ standard is 3.8 g/kW-hr and the CO standard is 200.0 g/kW-hr. For natural gas-fueled engines, you are not required to measure nonmethane hydrocarbon emissions or total hydrocarbon emissions for testing to show that the engine meets the emission standards of this paragraph (c); that is, you may assume HC emissions are equal to zero.

(3) You may apply the following formula to determine alternate emission standards that apply to your engines instead of the standards in paragraph (c)(1) of this section: $(HC+NO_X) \times CO^{0.791} \leq 16.78$. $HC+NO_X$ emission levels may not exceed 3.8 g/kW-hr and CO emission levels may not exceed 31.0 g/kW-hr. The following table illustrates a range of possible values under this paragraph (c)(2):

TABLE 3 OF § 1048.101.—EXAMPLES OF POSSIBLE TIER 2 FIELD-TESTING EMISSION STANDARDS

| $HC+NO_X$ (g/kW-hr) | CO (g/kW-hr) |
|---|---|
| 3.8 | 6.5 |
| 3.1 | 8.5 |
| 2.4 | 11.7 |
| 1.8 | 16.8 |
| 1.4 | 23.1 |
| 1.1 | 31.0 |

* * * * *

(e) *Fuel types.* The exhaust emission standards in this section apply for engines using each type of fuel specified in 40 CFR part 1065, subpart H, on which the engines in the engine family are designed to operate, except for engines certified under § 1048.625. For engines certified under § 1048.625, the standards of this section apply to emissions measured using the specified test fuel. You must meet the numerical emission standards for hydrocarbons in this section based on the following types of hydrocarbon emissions for engines powered by the following fuels:

(1) Gasoline- and LPG-fueled engines: THC emissions.

(2) Natural gas-fueled engines: NMHC emissions.

(3) Alcohol-fueled engines: THCE emissions.

* * * * *

(g) *Useful life.* Your engines must meet the exhaust emission standards in paragraphs (a) through (c) of this section over their full useful life. For severe-duty engines, the minimum useful life is 1,500 hours of operation or seven years, whichever comes first. For all other engines, the minimum useful life is 5,000 hours of operation or seven years, whichever comes first.

(1) Specify a longer useful life in hours for an engine family under either of two conditions:

(i) If you design, advertise, or market your engine to operate longer than the minimum useful life (your recommended hours until rebuild may indicate a longer design life).

(ii) If your basic mechanical warranty is longer than the minimum useful life.

(2) You may request in your application for certification that we approve a shorter useful life for an engine family. We may approve a shorter useful life, in hours of engine operation but not in years, if we determine that these engines will rarely operate longer than the shorter useful life. If engines identical to those in the engine family have already been produced and are in use, your demonstration must include documentation from such in-use engines. In other cases, your demonstration must include an engineering analysis of information equivalent to such in-use data, such as data from research engines or similar engine models that are already in production. Your demonstration must also include any overhaul interval that you recommend, any mechanical warranty that you offer for the engine or its components, and any relevant customer design specifications. Your demonstration may include any other relevant information. The useful life value may not be shorter than any of the following:

(i) 1,000 hours of operation.

(ii) Your recommended overhaul interval.

(iii) Your mechanical warranty for the engine.

(h) *Applicability for testing.* The emission standards in this subpart apply to all testing, including certification, production-line, and in-use testing. For production-line testing, you must perform duty-cycle testing as specified in §§ 1048.505 and 1048.510. The field-testing standards of this section apply for those tests. You need not do additional testing of production-line engines to show that your engines meet the field-testing standards.

■ 219. Section 1048.105 is amended by revising the section heading and adding introductory text to read as follows:

**§ 1048.105 What evaporative emission standards and requirements apply?**

The requirements of this section apply to all engines that are subject to this part, except auxiliary marine engines.

* * * * *

■ 220. Section 1048.115 is amended by removing and reserving paragraph (d) and revising the introductory text and paragraphs (a), (b), (e), and (g) to read as follows:

**§ 1048.115 What other requirements must my engines meet?**

Engines subject to this part must meet the following requirements:

(a) *Crankcase emissions.* Crankcase emissions may not be discharged directly into the ambient atmosphere from any engine throughout its useful life, except as follows:

(1) Engines may discharge crankcase emissions to the ambient atmosphere if the emissions are added to the exhaust emissions (either physically or mathematically) during all emission testing. If you take advantage of this exception, you must do the following things:

(i) Manufacture the engines so that all crankcase emissions can be routed into the applicable sampling systems specified in 40 CFR part 1065.

(ii) Account for deterioration in crankcase emissions when determining exhaust deterioration factors.

(2) For purposes of this paragraph (a), crankcase emissions that are routed to the exhaust upstream of exhaust aftertreatment during all operation are not considered to be discharged directly into the ambient atmosphere.

(b) *Torque broadcasting.* Electronically controlled engines must broadcast their speed and output shaft torque (in newton-meters). Engines may alternatively broadcast a surrogate value for determining torque. Engines must broadcast engine parameters such that they can be read with a remote device, or broadcast them directly to their controller area networks. This information is necessary for testing engines in the field (see § 1048.515). This requirement applies beginning in the 2007 model year. Small-volume engine manufacturers may omit this requirement.

* * * * *

(e) *Adjustable parameters.* Engines that have adjustable parameters must meet all the requirements of this part for any adjustment in the physically adjustable range. An operating parameter is not considered adjustable if you permanently seal it or if it is not normally accessible using ordinary tools. We may require that you set adjustable parameters to any specification within the adjustable range during any testing, including certification testing, selective enforcement auditing, or in-use testing.

* * * * *

(g) *Defeat devices.* You may not equip your engines with a defeat device. A defeat device is an auxiliary emission-control device that reduces the effectiveness of emission controls under conditions that the engine may reasonably be expected to encounter during normal operation and use. This does not apply to auxiliary-emission control devices you identify in your certification application if any of the following is true:

(1) The conditions of concern were substantially included in the applicable test procedures described in subpart F of this part.

(2) You show your design is necessary to prevent engine (or equipment) damage or accidents.

(3) The reduced effectiveness applies only to starting the engine.

■ 221. Section 1048.120 is revised to read as follows:

**§ 1048.120 What emission-related warranty requirements apply to me?**

(a) *General requirements.* You must warrant to the ultimate purchaser and each subsequent purchaser that the new nonroad engine, including all parts of its emission-control system, meets two conditions:

(1) It is designed, built, and equipped so it conforms at the time of sale to the ultimate purchaser with the requirements of this part.

(2) It is free from defects in materials and workmanship that may keep it from meeting these requirements.

(b) *Warranty period.* Your emission-related warranty must be valid for at least 50 percent of the engine's useful life in hours of operation or at least three years, whichever comes first. In the case of a high-cost warranted part, the warranty must be valid for at least 70 percent of the engine's useful life in hours of operation or at least five years, whichever comes first. You may offer an emission-related warranty more generous than we require. The emission-related warranty for the engine may not be shorter than any published warranty you offer without charge for the engine. Similarly, the emission-related warranty for any component may not be shorter than any published warranty you offer without charge for that component. If an engine has no hour meter, we base the warranty periods in this paragraph (b) only on the engine's age (in years). The warranty period begins when the engine is placed into service.

(c) *Components covered.* The emission-related warranty covers all components whose failure would increase an engine's emissions of any pollutant. This includes components listed in 40 CFR part 1068, Appendix I, and components from any other system you develop to control emissions. The emission-related warranty covers these components even if another company produces the component. Your emission-related warranty does not cover components whose failure would not increase an engine's emissions of any pollutant.

(d) *Limited applicability.* You may deny warranty claims under this section if the operator caused the problem through improper maintenance or use, as described in 40 CFR 1068.115.

(e) *Owners manual.* Describe in the owners manual the emission-related warranty provisions from this section that apply to the engine.

■ 222. Section 1048.125 is revised to read as follows:

**§ 1048.125 What maintenance instructions must I give to buyers?**

Give the ultimate purchaser of each new nonroad engine written instructions for properly maintaining and using the engine, including the emission-control system. The maintenance instructions also apply to service accumulation on your emission-data engines, as described in 40 CFR part 1065.

(a) *Critical emission-related maintenance.* Critical emission-related maintenance includes any adjustment, cleaning, repair, or replacement of critical emission-related components. This may also include additional emission-related maintenance that you determine is critical if we approve it in advance. You may schedule critical emission-related maintenance on these components if you meet the following conditions:

(1) You demonstrate that the maintenance is reasonably likely to be done at the recommended intervals on in-use engines. We will accept scheduled maintenance as reasonably likely to occur if you satisfy any of the following conditions:

(i) You present data showing that, if a lack of maintenance increases emissions, it also unacceptably degrades the engine's performance.

(ii) You present survey data showing that at least 80 percent of engines in the field get the maintenance you specify at the recommended intervals.

(iii) You provide the maintenance free of charge and clearly say so in maintenance instructions for the customer.

(iv) You otherwise show us that the maintenance is reasonably likely to be done at the recommended intervals.

(2) You may not schedule critical emission-related maintenance more frequently than the following minimum intervals, except as specified in paragraphs (a)(3),

(b) and (c) of this section:

(i) For catalysts, fuel injectors, electronic control units, superchargers, and turbochargers: The useful life of the engine family.

(ii) For gaseous fuel-system components (cleaning without disassembly only) and oxygen sensors: 2,500 hours.

(3) If your engine family has an alternate useful life under § 1048.101(g) that is shorter than the period specified in paragraph (a)(2)(ii) of this section, you may not schedule critical emission-related maintenance more frequently than the alternate useful life, except as specified in paragraph (c) of this section.

(b) *Recommended additional maintenance.* You may recommend any additional amount of maintenance on the components listed in paragraph (a) of this section, as long as you state clearly that these maintenance steps are not necessary to keep the emission-related warranty valid. If operators do the maintenance specified in paragraph (a) of this section, but not the recommended additional maintenance, this does not allow you to disqualify those engines from in-use testing or deny a warranty claim. Do not take these maintenance steps during service accumulation on your emission-data engines.

(c) *Special maintenance.* You may specify more frequent maintenance to address problems related to special situations, such as substandard fuel or atypical engine operation. For example, you may specify more frequent cleaning of fuel system components for engines you have reason to believe will be using fuel that causes substantially more engine performance problems than commercial fuels of the same type that are generally available across the United States. You must clearly state that this additional maintenance is associated with the special situation you are addressing.

(d) *Noncritical emission-related maintenance.* You may schedule any amount of emission-related inspection or maintenance that is not covered by paragraph (a) of this section, as long as you state in the owners manual that these steps are not necessary to keep the emission-related warranty valid. If operators fail to do this maintenance, this does not allow you to disqualify those engines from in-use testing or deny a warranty claim. Do not take these inspection or maintenance steps during service accumulation on your emission-data engines.

(e) *Maintenance that is not emission-related.* For maintenance unrelated to emission controls, you may schedule any amount of inspection or maintenance. You may also take these inspection or maintenance steps during service accumulation on your emission-data engines, as long as they are reasonable and technologically necessary. This might include adding engine oil, changing air, fuel, or oil filters, servicing engine-cooling systems, and adjusting idle speed, governor, engine bolt torque, valve lash, or injector lash. You may perform this nonemission-related maintenance on emission-data engines at the least frequent intervals that you recommend to the ultimate purchaser (but not the intervals recommended for severe service).

(f) *Source of parts and repairs.* State clearly on the first page of your written maintenance instructions that a repair shop or person of the owner's choosing may maintain, replace, or repair emission-control devices and systems. Your instructions may not require components or service identified by brand, trade, or corporate name. Also, do not directly or indirectly condition your warranty on a requirement that the engine be serviced by your franchised dealers or any other service establishments with which you have a commercial relationship. You may disregard the requirements in this paragraph (f) if you do one of two things:

(1) Provide a component or service without charge under the purchase agreement.

(2) Get us to waive this prohibition in the public's interest by convincing us the engine will work properly only with the identified component or service.

(g) *Payment for scheduled maintenance.* Owners are responsible for properly maintaining their engines. This generally includes paying for scheduled maintenance. However, manufacturers must pay for scheduled maintenance during the useful life if it meets all the following criteria:

(1) Each affected component was not in general use on similar engines before January 1, 2004.

(2) The primary function of each affected component is to reduce emissions.

(3) The cost of the scheduled maintenance is more than 2 percent of the price of the engine.

(4) Failure to perform the maintenance would not cause clear problems that would significantly degrade the engine's performance.

(h) *Owners manual.* Explain the owner's responsibility for proper maintenance in the owners manual.

■ 223. Section 1048.130 is amended by revising paragraphs (a), (b)(3), (b)(7), and (b)(8); and adding paragraph (d) to read as follows:

**§ 1048.130 What installation instructions must I give to equipment manufacturers?**

(a) If you sell an engine for someone else to install in a piece of nonroad equipment, give the engine installer instructions for installing it consistent with the requirements of this part. Include all information necessary to ensure that an engine will be installed in its certified configuration.

(b) * * *

(3) Describe the instructions needed to properly install the exhaust system and any other components. Include instructions consistent with the requirements of § 1048.205(v).

* * * * *

(7) Describe any other instructions to make sure the installed engine will operate according to design specifications in your application for certification. This may include, for example, instructions for installing aftertreatment devices when installing the engines.

(8) State: ''If you install the engine in a way that makes the engine's emission control information label hard to read during normal engine maintenance, you must place a duplicate label on the equipment, as described in 40 CFR 1068.105.''.

* * * * *

(d) Provide instructions in writing or in an equivalent format. For example, you may post instructions on a publicly available Web site for downloading or printing. If you do not provide the instructions in writing, explain in your application for certification how you will ensure that each installer is informed of the installation requirements.

■ 224. Section 1048.135 is revised to read as follows:

**§ 1048.135 How must I label and identify the engines I produce?**

(a) Assign each engine a unique identification number and permanently affix, engrave, or stamp it on the engine in a legible way.

(b) At the time of manufacture, affix a permanent and legible label identifying each engine. The label must be—

(1) Attached in one piece so it is not removable without being destroyed or defaced.

(2) Secured to a part of the engine needed for normal operation and not normally requiring replacement.

(3) Durable and readable for the engine's entire life.

(4) Written in English.

(c) The label must—

(1) Include the heading ''EMISSION CONTROL INFORMATION''.

(2) Include your full corporate name and trademark. You may identify another company and use its trademark instead of yours if you comply with the provisions of § 1048.635.

(3) Include EPA's standardized designation for the engine family (and subfamily, where applicable).

(4) State the engine's displacement (in liters); however, you may omit this from the label if all the engines in the engine family have the same per-cylinder displacement and total displacement.

(5) State the date of manufacture [MONTH and YEAR]. You may omit this from the label if you keep a record of the engine-manufacture dates and provide it to us upon request.

(6) Identify the emission-control system. Use terms and abbreviations consistent with SAE J1930 (incorporated by reference in § 1048.810). You may omit this information from the label if there is not enough room for it and you put it in the owners manual instead.

(7) State: ''THIS ENGINE IS CERTIFIED TO OPERATE ON [specify operating fuel or fuels].''.

(8) Identify any requirements for fuel and lubricants. You may omit this information from the label if there is not enough room for it and you put it in the owners manual instead.

(9) List specifications and adjustments for engine tuneups; show the proper position for the transmission during tuneup and state which accessories should be operating. You may omit this information from the label if there is not enough room for it and you put it in the owners manual instead.

(10) State the useful life for your engine family if it has a longer useful life under § 1048.101(g)(1) or a shortened useful life under § 1048.101(g)(2).

(11) Identify the emission standards to which you have certified the engine.

(12) State: ''THIS ENGINE COMPLIES WITH U.S. EPA REGULATIONS FOR [MODEL YEAR] LARGE NONROAD SI ENGINES.''.

(13) If your engines are certified only for constant-speed operation, state: ''USE IN CONSTANT–SPEED APPLICATIONS ONLY''.

(14) If your engines are certified only for variable-speed operation, state: ''USE IN VARIABLE–SPEED APPLICATIONS ONLY''.

(15) If your engines are certified only for high-load engines, state: ''THIS ENGINE IS NOT INTENDED FOR OPERATION AT LESS THAN 75 PERCENT OF FULL LOAD.''.

(16) If you certify your engines under § 1048.101(d) (and show in your application for certification that in-use engines will experience infrequent high-load operation), state: ''THIS ENGINE IS NOT INTENDED FOR OPERATION AT MORE THAN__PERCENT OF FULL LOAD.''. Specify the appropriate percentage of full load based on the nature of the engine protection. You may add other statements to discourage operation in engine-protection modes.

(17) If your engines are certified to the voluntary standards in § 1048.140, state: ''BLUE SKY SERIES''.

(d) You may add information to the emission control information label to identify other emission standards that the engine meets or does not meet (such

as California standards). You may also add other information to ensure that the engine will be properly maintained and used.

(e) You may ask us to approve modified labeling requirements in this part 1048 if you show that it is necessary or appropriate. We will approve your request if your alternate label is consistent with the requirements of this part.

(f) If you obscure the engine label while installing the engine in the equipment such that the label will be hard to read during normal maintenance, you must place a duplicate label on the equipment. If others install your engine in their equipment in a way that obscures the engine label, we require them to add a duplicate label on the equipment (see 40 CFR 1068.105); in that case, give them the number of duplicate labels they request and keep the following records for at least five years:

(1) Written documentation of the request from the equipment manufacturer.

(2) The number of duplicate labels you send and the date you sent them.

■ 225. Section 1048.140 is amended by revising paragraph (c) to read as follows:

**§ 1048.140 What are the provisions for certifying Blue Sky Series engines?**

* * * * *

(c) For any model year, to receive a certificate of conformity as a ''Blue Sky Series'' engine family must meet all the requirements in this part while certifying to one of the sets of exhaust emission standards in the following table:

TABLE 1 OF § 1048.140.—LONG-TERM STANDARDS FOR BLUE SKY SERIES ENGINES (G/KW-HR)

| Standards for steady-state and transient test procedures | | Standards for field-testing procedures | |
|---|---|---|---|
| $HC+NO_X$ | CO | $HC+NO_X$ | CO |
| 0.80 | 4.4 | 1.10 | 6.6 |
| 0.60 | 4.4 | 0.84 | 6.6 |
| 0.40 | 4.4 | 0.56 | 6.6 |
| 0.20 | 4.4 | 0.28 | 6.6 |
| 0.10 | 4.4 | 0.14 | 6.6 |

* * * * *

■ 226. Section 1048.145 is amended by revising the section heading and paragraph (a) and removing and reserving paragraph(c) to read as follows:

**§ 1048.145 Are there interim provisions that apply only for a limited time?**

* * * * *

(a) *Family banking.* This paragraph (a) allows you to reduce the number of engines subject to the Tier 2 standards by certifying some of your engines earlier than otherwise required, as follows:

(1) For early-compliant engines to generate offsets under this paragraph (a), you must meet the following general provisions:

(i) You must begin actual production of early-compliant engines by September 1, 2006.

(ii) Engines you produce after December 31, 2006 may not generate offsets.

(iii) Offset-generating engines must be certified to the Tier 2 standards and requirements under this part 1048.

(iv) If you certify engines under the voluntary standards of § 1048.140, you may not use them in your calculation under this paragraph (a).

(2) For every offset-generating engine certified to the Tier 2 standards, you may reduce the number of engines with the same maximum engine power that are required to meet the Tier 2 standards in later model years by one engine. You may calculate power-weighted offsets based on actual U.S.-directed sales volumes. For example, if you produce a total of 1,000 engines in 2005 and 2006 with an average maximum power of 60 kW certified to the Tier 2 standards, you may delay certification to that tier of standards for up to 60,000 kW-engine-years in any of the following ways:

(i) Delay certification of up to 600 engines with an average maximum power of 100 kW for one model year.

(ii) Delay certification of up to 200 engines with an average maximum power of 100 kW for three consecutive model years.

(iii) Delay certification of up to 400 engines with an average maximum power of 100 kW for one model year and up to 50 engines with an average maximum power of 200 kW for two model years.

(3) Offset-using engines (that is, those not required to certify to the Tier 2 standards) must be certified to the Tier 1 standards and requirements of this part 1048. You may delay compliance for up to three model years.

(4) By January 31 of each year in which you use the provisions of this paragraph (a), send us a report describing how many offset-generating or offset-using engines you produced in the preceding model year.

* * * * *

■ 227. Section 1048.201 is revised to read as follows:

**§ 1048.201 What are the general requirements for obtaining a certificate of conformity?**

(a) You must send us a separate application for a certificate of conformity for each engine family. A certificate of conformity is valid from the indicated effective date untilDecember 31 of the model year for which it is issued.

(b) The application must contain all the information required by this part and must not include false or incomplete statements or information (see § 1048.255).

(c) We may ask you to include less information than we specify in this subpart, as long as you maintain all the information required by § 1048.250.

(d) You must use good engineering judgment for all decisions related to your application (see 40 CFR 1068.5).

(e) An authorized representative of your company must approve and sign the application.

(f) See § 1048.255 for provisions describing how we will process your application.

(g) We may require you to deliver your test engines to a facility we designate for our testing (see § 1048.235(c)).

■ 228. Section 1048.205 is revised to read as follows:

**§ 1048.205 What must I include in my application?**

This section specifies the information that must be in your application, unless we ask you to include less information under § 1048.201(c). We may require you to provide additional information to evaluate your application.

(a) Describe the engine family's specifications and other basic parameters of the engine's design and emission controls. List the fuel types on

which your engines are designed to operate (for example, gasoline and natural gas). List each distinguishable engine configuration in the engine family.

(b) Explain how the emission-control system operates. Describe in detail all system components for controlling exhaust emissions, including all auxiliary-emission control devices (AECDs) and all fuel-system components you will install on any production or test engine. Describe the evaporative emission controls. Identify the part number of each component you describe. For this paragraph (b), treat as separate AECDs any devices that modulate or activate differently from each other. Include all the following:

(1) Give a general overview of the engine, the emission-control strategies, and all AECDs.

(2) Describe each AECD's general purpose and function.

(3) Identify the parameters that each AECD senses (including measuring, estimating, calculating, or empirically deriving the values). Include equipment-based parameters and state whether you simulate them during testing with the applicable procedures.

(4) Describe the purpose for sensing each parameter.

(5) Identify the location of each sensor the AECD uses.

(6) Identify the threshold values for the sensed parameters that activate the AECD.

(7) Describe the parameters that the AECD modulates (controls) in response to any sensed parameters, including the range of modulation for each parameter, the relationship between the sensed parameters and the controlled parameters and how the modulation achieves the AECD's stated purpose. Use graphs and tables, as necessary.

(8) Describe each AECD's specific calibration details. This may be in the form of data tables, graphical representations, or some other description.

(9) Describe the hierarchy among the AECDs when multiple AECDs sense or modulate the same parameter. Describe whether the strategies interact in a comparative or additive manner and identify which AECD takes precedence in responding, if applicable.

(10) Explain the extent to which the AECD is included in the applicable test procedures specified in subpart F of this part.

(11) Do the following additional things for AECDs designed to protect engines or equipment:

(i) Identify the engine and/or equipment design limits that make protection necessary and describe any damage that would occur without the AECD.

(ii) Describe how each sensed parameter relates to the protected components' design limits or those operating conditions that cause the need for protection.

(iii) Describe the relationship between the design limits/parameters being protected and the parameters sensed or calculated as surrogates for those design limits/parameters, if applicable.

(iv) Describe how the modulation by the AECD prevents engines and/or equipment from exceeding design limits.

(v) Explain why it is necessary to estimate any parameters instead of measuring them directly and describe how the AECD calculates the estimated value, if applicable.

(vi) Describe how you calibrate the AECD modulation to activate only during conditions related to the stated need to protect components and only as needed to sufficiently protect those components in a way that minimizes the emission impact.

(c) Explain how the engine diagnostic system works, describing especially the engine conditions (with the corresponding diagnostic trouble codes) that cause the malfunction-indicator light to go on. Propose what you consider to be extreme conditions under which the diagnostic system should disregard trouble codes, as described in § 1048.110.

(d) Describe the engines you selected for testing and the reasons for selecting them.

(e) Describe the test equipment and procedures that you used, including any special or alternate test procedures you used (see § 1048.501).

(f) Describe how you operated the emission-data engine before testing, including the duty cycle and the number of engine operating hours used to stabilize emission levels. Explain why you selected the method of service accumulation. Describe any scheduled maintenance you did.

(g) List the specifications of each test fuel to show that it falls within the required ranges we specify in 40 CFR part 1065, subpart H.

(h) Identify the engine family's useful life.

(i) Include the maintenance instructions you will give to the ultimate purchaser of each new nonroad engine (see § 1048.125).

(j) Include the emission-related installation instructions you will provide if someone else installs your engines in a piece of nonroad equipment (see § 1048.130).

(k) Identify each high-cost warranted part and show us how you calculated its replacement cost, including the estimated retail cost of the part, labor rates, and labor hours to diagnose and replace defective parts.

(l) Describe your emission control information label (see § 1048.135).

(m) Identify the emission standards to which you are certifying engines in the engine family.

(n) Identify the engine family's deterioration factors and describe how you developed them (see § 1048.240). Present any emission test data you used for this.

(o) State that you operated your emission-data engines as described in the application(including the test procedures, test parameters, and test fuels) to show you meet the requirements of this part.

(p) Present emission data to show that you meet emission standards, as follows:

(1) Present exhaust emission data for HC, $NO_X$, and CO on an emission-data engine to show your engines meet the applicable duty-cycle emission standards we specify in § 1048.101. Show emission figures before and after applying adjustment factors for deterioration factors for each engine. Include test data for each type of fuel from 40 CFR part 1065, subpart H, on which you intend for engines in the engine family to operate (for example, gasoline, liquefied petroleum gas, methanol, or natural gas). If we specify more than one grade of any fuel type (for example, a summer grade and winter grade of gasoline), you only need to submit test data for one grade, unless the regulations of this part specify otherwise for your engine. Note that § 1048.235 allows you to submit an application in certain cases without new emission data.

(2) If your engine family includes a volatile liquid fuel (and you do not use design-based certification under § 1048.245), present evaporative test data to show your vehicles meet the evaporative emission standards we specify in subpart B of this part. Show these figures before and after applying deterioration factors, where applicable.

(q) State that all the engines in the engine family comply with the field-testing emission standards we specify in § 1048.104 for all normal operation and use when tested as specified in § 1048.515. Describe any relevant testing, engineering analysis, or other information in sufficient detail to support your statement.

(r) For engines with maximum engine power above 560 kW, include information showing how your emission

controls will function during normal in-use transient operation. For example, this might include the following:

(1) Emission data from transient testing of engines using measurement systems designed for measuring in-use emissions.

(2) Comparison of the engine design for controlling transient emissions with that from engines for which you have emission data over the transient duty cycle for certification.

(3) Detailed descriptions of control algorithms and other design parameters for controlling transient emissions.

(s) Report all test results, including those from invalid tests or from any other tests, whether or not they were conducted according to the test procedures of subpart F of this part. If you measure $CO_2$, report those emission levels. We may ask you to send other information to confirm that your tests were valid under the requirements of this part and 40 CFR part 1065.

(t) Describe all adjustable operating parameters (see § 1048.115(e)), including production tolerances. Include the following in your description of each parameter:

(1) The nominal or recommended setting.

(2) The intended physically adjustable range.

(3) The limits or stops used to establish adjustable ranges.

(4) Information showing why the limits, stops, or other means of inhibiting adjustment are effective in preventing adjustment of parameters on in-use engines to settings outside your intended physically adjustable ranges.

(u) Provide the information to read, record, and interpret all the information broadcast by an engine's onboard computers and electronic control units. State that, upon request, you will give us any hardware, software, or tools we would need to do this. If you broadcast a surrogate parameter for torque values, you must provide us what we need to convert these into torque units. You may reference any appropriate publicly released standards that define conventions for these messages and parameters. Format your information consistent with publicly released standards.

(v) Confirm that your emission-related installation instructions specify how to ensure that sampling of exhaust emissions will be possible after engines are installed in equipment and placed in service. If this cannot be done by simply adding a 20-centimeter extension to the exhaust pipe, show how to sample exhaust emissions in a way that prevents diluting the exhaust sample with ambient air.

(w) State whether your engine will operate in variable-speed applications, constant-speed applications, or both. If your certification covers only constant-speed or only variable-speed applications, describe how you will prevent use of these engines in applications for which they are not certified.

(x) Unconditionally certify that all the engines in the engine family comply with the requirements of this part, other referenced parts of the CFR, and the Clean Air Act.

(y) Include estimates of U.S.-directed production volumes.

(z) Include other applicable information, such as information specified in this part or part 1068 of this chapter related to requests for exemptions.

(aa) Name an agent for service of process located in the United States. Service on this agent constitutes service on you or any of your officers or employees for any action by EPA or otherwise by the United States related to the requirements of this part.

■ 229. Section 1048.210 is revised to read as follows:

**§ 1048.210 May I get preliminary approval before I complete my application?**

If you send us information before you finish the application, we will review it and make any appropriate determinations, especially for questions related to engine family definitions, auxiliary emission-control devices, deterioration factors, testing for service accumulation, and maintenance. Decisions made under this section are considered to be preliminary approval, subject to final review and approval. We will generally not reverse a decision where we have given you preliminary approval, unless we find new information supporting a different decision. If you request preliminary approval related to the upcoming model year or the model year after that, we will make best-efforts to make the appropriate determinations as soon as practicable. We will generally not provide preliminary approval related to a future model year more than two years ahead of time.

**§ 1048.215 [Removed]**

■ 230. Section 1048.215 is removed.

■ 231. Section 1048.220 is revised to read as follows:

**§ 1048.220 How do I amend the maintenance instructions in my application?**

You may amend your emission-related maintenance instructions after you submit your application for certification, as long as the amended instructions remain consistent with the provisions of § 1048.125. You must send the Designated Compliance Officer a request to amend your application for certification for an engine family if you want to change the emission-related maintenance instructions in a way that could affect emissions. In your request, describe the proposed changes to the maintenance instructions. We will disapprove your request if we determine that the amended instructions are inconsistent with maintenance you performed on emission-data engines.

(a) If you are decreasing the specified maintenance, you may distribute the new maintenance instructions to your customers 30 days after we receive your request, unless we disapprove your request. We may approve a shorter time or waive this requirement.

(b) If your requested change would not decrease the specified maintenance, you may distribute the new maintenance instructions anytime after you send your request. For example, this paragraph (b) would cover adding instructions to increase the frequency of a maintenance step for engines in severe-duty applications.

(c) You need not request approval if you are making only minor corrections (such as correcting typographical mistakes), clarifying your maintenance instructions, or changing instructions for maintenance unrelated to emission control.

■ 232. Section 1048.225 is revised to read as follows:

**§ 1048.225 How do I amend my application for certification to include new or modified engines?**

Before we issue you a certificate of conformity, you may amend your application to include new or modified engine configurations, subject to the provisions of this section. After we have issued your certificate of conformity, you may send us an amended application requesting that we include new or modified engine configurations within the scope of the certificate, subject to the provisions of this section. You must amend your application if any changes occur with respect to any information included in your application.

(a) You must amend your application before you take either of the following actions:

(1) Add an engine (that is, an additional engine configuration) to an engine family. In this case, the engine added must be consistent with other engines in the engine family with respect to the criteria listed in § 1048.230.

(2) Change an engine already included in an engine family in a way that may affect emissions, or change any of the components you described in your application for certification. This includes production and design changes that may affect emissions any time during the engine's lifetime.

(b) To amend your application for certification, send the Designated Compliance Officer the following information:

(1) Describe in detail the addition or change in the engine model or configuration you intend to make.

(2) Include engineering evaluations or data showing that the amended engine family complies with all applicable requirements. You may do this by showing that the original emission-data engine is still appropriate with respect to showing compliance of the amended family with all applicable requirements.

(3) If the original emission-data engine for the engine family is not appropriate to show compliance for the new or modified nonroad engine, include new test data showing that the new or modified nonroad engine meets the requirements of this part.

(c) We may ask for more test data or engineering evaluations. You must give us these within 30 days after we request them.

(d) For engine families already covered by a certificate of conformity, we will determine whether the existing certificate of conformity covers your new or modified nonroad engine. You may ask for a hearing if we deny your request (see § 1048.820).

(e) For engine families already covered by a certificate of conformity, you may start producing the new or modified nonroad engine anytime after you send us your amended application, before we make a decision under paragraph (d) of this section. However, if we determine that the affected engines do not meet applicable requirements, we will notify you to cease production of the engines and may require you to recall the engines at no expense to the owner. Choosing to produce engines under this paragraph (e) is deemed to be consent to recall all engines that we determine do not meet applicable emission standards or other requirements and to remedy the nonconformity at no expense to the owner. If you do not provide information required under paragraph (c) of this section within 30 days, you must stop producing the new or modified nonroad engines.

■ 233. Section 1048.230 is revised to read as follows:

**§ 1048.230 How do I select engine families?**

(a) Divide your product line into families of engines that are expected to have similar emission characteristics throughout the useful life. Your engine family is limited to a single model year.

(b) Group engines in the same engine family if they are the same in all of the following aspects:

(1) The combustion cycle.

(2) The cooling system (water-cooled vs. air-cooled).

(3) Configuration of the fuel system (for example, fuel injection vs. carburetion).

(4) Method of air aspiration.

(5) The number, location, volume, and composition of catalytic converters.

(6) The number, arrangement, and approximate bore diameter of cylinders.

(7) Evaporative emission controls.

(c) You may subdivide a group of engines that is identical under paragraph (b) of this section into different engine families if you show the expected emission characteristics are different during the useful life.

(d) You may group engines that are not identical with respect to the things listed in paragraph (b) of this section in the same engine family if you show that their emission characteristics during the useful life will be similar.

(e) You may create separate families for exhaust emissions and evaporative emissions. If we do this, list both families on the emission control information label.

(f) Where necessary, you may divide an engine family into sub-families to meet different emission standards, as specified in § 1048.101(a)(2). For issues related to compliance and prohibited actions, we will generally apply decisions to the whole engine family. For engine labels and other administrative provisions, we may approve your request for separate treatment of sub-families.

■ 234. Section 1048.235 is revised to read as follows:

**§ 1048.235 What emission testing must I perform for my application for a certificate of conformity?**

This section describes the emission testing you must perform to show compliance with the emission standards in §§ 1048.101(a) and (b) and 1048.105 during certification. See § 1048.205(q) regarding emission testing related to the field-testing standards. See § 1048.240 and 40 CFR part 1065, subpart E, regarding service accumulation before emission testing.

(a) Test your emission-data engines using the procedures and equipment specified in subpart F of this part. For any testing related to evaporative emissions, use good engineering judgment to include a complete fuel system with the engine.

(b) Select emission-data engines according to the following criteria:

(1) *Exhaust testing.* For each fuel type from each engine family, select an emission-data engine with a configuration that is most likely to exceed the exhaust emission standards, using good engineering judgment. Consider the emission levels of all exhaust constituents over the full useful life of the engine when operated in a piece of equipment.

(2) *Evaporative testing.* For each engine family that includes a volatile liquid fuel, select a test fuel system with a configuration that is most likely to exceed the evaporative emission standards, using good engineering judgment.

(c) We may measure emissions from any of your test engines or other engines from the engine family, as follows:

(1) We may decide to do the testing at your plant or any other facility. If we do this, you must deliver the test engine to a test facility we designate. The test engine you provide must include appropriate manifolds, aftertreatment devices, electronic control units, and other emission-related components not normally attached directly to the engine block. If we do the testing at your plant, you must schedule it as soon as possible and make available the instruments, personnel, and equipment we need.

(2) If we measure emissions on one of your test engines, the results of that testing become the official emission results for the engine. Unless we later invalidate these data, we may decide not to consider your data in determining if your engine family meets applicable requirements.

(3) Before we test one of your engines, we may set its adjustable parameters to any point within the physically adjustable ranges (see § 1048.115(e)).

(4) Before we test one of your engines, we may calibrate it within normal production tolerances for anything we do not consider an adjustable parameter.

(d) You may ask to use emission data from a previous model year instead of doing new tests, but only if all the following are true:

(1) The engine family from the previous model year differs from the current engine family only with respect to model year.

(2) The emission-data engine from the previous model year remains the appropriate emission-data engine under paragraph (b) of this section.

(3) The data show that the emission-data engine would meet all the

requirements that apply to the engine family covered by the application for certification.

(e) We may require you to test a second engine of the same or different configuration in addition to the engine tested under paragraph (b) of this section.

(f) If you use an alternate test procedure under 40 CFR 1065.10 and later testing shows that such testing does not produce results that are equivalent to the procedures specified in subpart F of this part, we may reject data you generated using the alternate procedure.

■ 235. Section 1048.240 is revised to read as follows:

**§ 1048.240 How do I demonstrate that my engine family complies with exhaust emission standards?**

(a) For purposes of certification, your engine family is considered in compliance with the applicable numerical emission standards in § 1048.101(a) and (b) if all emission-data engines representing that family have test results showing deteriorated emission levels at or below these standards.

(b) Your engine family is deemed not to comply if any emission-data engine representing that family has test results showing a deteriorated emission level above an applicable emission standard from § 1048.101 for any pollutant.

(c) To compare emission levels from the emission-data engine with the applicable emission standards, apply deterioration factors to the measured emission levels for each pollutant. Specify the deterioration factors based on emission measurements using four significant figures, consistent with good engineering judgment. For example, your deterioration factors must take into account any available data from in-use testing with similar engines (see subpart E of this part). Small-volume engine manufacturers may use assigned deterioration factors that we establish. Apply deterioration factors as follows:

(1) *Multiplicative deterioration factor.* For engines that use aftertreatment technology, such as catalytic converters, use a multiplicative deterioration factor for exhaust emissions. A multiplicative deterioration factor is the ratio of exhaust emissions at the end of useful life to exhaust emissions at the low-hour test point. Adjust the official emission results for each tested engine at the selected test point by multiplying the measured emissions by the deterioration factor. If the factor is less than one, use one.

(2) *Additive deterioration factor.* For engines that do not use aftertreatment technology, use an additive deterioration factor for exhaust emissions. An additive deterioration factor is the difference between exhaust emissions at the end of useful life and exhaust emissions at the low-hour test point. Adjust the official emission results for each tested engine at the selected test point by adding the factor to the measured emissions. If the factor is less than zero, use zero.

(d) Collect emission data using measurements to one more decimal place than the applicable standard. Apply the deterioration factor to the official emission result, as described in paragraph (c) of this section, then round the adjusted figure to the same number of decimal places as the emission standard. Compare the rounded emission levels to the emission standard for each emission-data engine. In the case of HC + $NO_X$ standards, apply the deterioration factor to each pollutant and then add the results before rounding.

■ 236. Section 1048.245 is amended by revising paragraph (e)(1)(i) to read as follows:

**§ 1048.245 How do I demonstrate that my engine family complies with evaporative emission standards?**

* * * * *

(e) * * *

(1) * * *

(i) Use a tethered or self-closing gas cap on a fuel tank that stays sealed up to a positive pressure of 24.5 kPa (3.5 psig) or a vacuum pressure of 0.7 kPa (0.1 psig).

* * * * *

■ 237. Section 1048.250 is amended by revising paragraphs (a) and (c) to read as follows:

**§ 1048.250 What records must I keep and make available to EPA?**

(a) Organize and maintain the following records:

(1) A copy of all applications and any summary information you send us.

(2) Any of the information we specify in § 1048.205 that you were not required to include in your application.

(3) A detailed history of each emission-data engine. For each engine, describe all of the following:

(i) The emission-data engine's construction, including its origin and buildup, steps you took to ensure that it represents production engines, any components you built specially for it, and all the components you include in your application for certification.

(ii) How you accumulated engine operating hours (service accumulation), including the dates and the number of hours accumulated.

(iii) All maintenance, including modifications, parts changes, and other service, and the dates and reasons for the maintenance.

(iv) All your emission tests, including documentation on routine and standard tests, as specified in part 40 CFR part 1065, and the date and purpose of each test.

(v) All tests to diagnose engine or emission-control performance, giving the date and time of each and the reasons for the test.

(vi) Any other significant events.

(4) Production figures for each engine family divided by assembly plant.

(5) Keep a list of engine identification numbers for all the engines you produce under each certificate of conformity.

* * * * *

(c) Store these records in any format and on any media, as long as you can promptly send us organized, written records in English if we ask for them. You must keep these records readily available. We may review them at any time.

* * * * *

■ 238. Section 1048.255 is revised to read as follows:

**§ 1048.255 When may EPA deny, revoke, or void my certificate of conformity?**

(a) If we determine your application is complete and shows that the engine family meets all the requirements of this part and the Act, we will issue a certificate of conformity for your engine family for that model year. We may make the approval subject to additional conditions.

(b) We may deny your application for certification if we determine that your engine family fails to comply with emission standards or other requirements of this part or the Act. Our decision may be based on a review of all information available to us. If we deny your application, we will explain why in writing.

(c) In addition, we may deny your application or suspend or revoke your certificate if you do any of the following:

(1) Refuse to comply with any testing or reporting requirements.

(2) Submit false or incomplete information (paragraph (e) of this section applies if this is fraudulent).

(3) Render inaccurate any test data.

(4) Deny us from completing authorized activities despite our presenting a warrant or court order (see 40 CFR 1068.20). This includes a failure to provide reasonable assistance.

(5) Produce engines for importation into the United States at a location where local law prohibits us from carrying out authorized activities.

(6) Fail to supply requested information or amend your application to include all engines being produced.

(7) Take any action that otherwise circumvents the intent of the Act or this part.

(d) We may void your certificate if you do not keep the records we require or do not give us information when we ask for it.

(e) We may void your certificate if we find that you intentionally submitted false or incomplete information.

(f) If we deny your application or suspend, revoke, or void your certificate, you may ask for a hearing (see § 1048.820).

■ 239. Section 1048.301 is amended by revising paragraphs (a) and (f) to read as follows:

**§ 1048.301 When must I test my production-line engines?**

(a) If you produce engines that are subject to the requirements of this part, you must test them as described in this subpart.

* * * * *

(f) We may ask you to make a reasonable number of production-line engines available for a reasonable time so we can test or inspect them for compliance with the requirements of this part. See 40 CFR 1068.27.

■ 240. Section 1048.305 is amended by revising paragraphs (d)(1), (f), and (g) to read as follows:

**§ 1048.305 How must I prepare and test my production-line engines?**

* * * * *

(d) * * *

(1) We may adjust or require you to adjust idle speed outside the physically adjustable range as needed only until the engine has stabilized emission levels (see paragraph (e) of this section). We may ask you for information needed to establish an alternate minimum idle speed.

* * * * *

(f) *Damage during shipment.* If shipping an engine to a remote facility for production-line testing makes necessary an adjustment or repair, you must wait until after the initial emission test to do this work. We may waive this requirement if the test would be impossible or unsafe, or if it would permanently damage the engine. Report to us, in your written report under § 1048.345, all adjustments or repairs you make on test engines before each test.

(g) *Retesting after invalid tests.* You may retest an engine if you determine an emission test is invalid under subpart F of this part. Explain in your written report reasons for invalidating any test and the emission results from all tests. If you retest an engine and, within ten days after testing, ask to substitute results of the new tests for the original ones, we will answer within ten days after we receive your information.

■ 241. Section 1048.310 is amended by revising paragraphs (c) introductory text, (c)(2), (g), (h), and (i) to read as follows:

**§ 1048.310 How must I select engines for production-line testing?**

* * * * *

(c) Calculate the required sample size for each engine family. Separately calculate this figure for $HC+NO_X$ and for CO. The required sample size is the greater of these two calculated values. Use the following equation:

$$N = \left[\frac{(t_{95} \times \sigma)}{(x - STD)}\right]^2 + 1$$

Where:

N = Required sample size for the model year.

$t_{95}$ = 95% confidence coefficient, which depends on the number of tests completed, n, as specified in the table in paragraph (c)(1) of this section. It defines 95% confidence intervals for a one-tail distribution.

x = Mean of emission test results of the sample.

STD = Emission standard.

σ = Test sample standard deviation (see paragraph (c)(2) of this section).

n = The number of tests completed in an engine family.

* * * * *

(2) Calculate the standard deviation, σ, for the test sample using the following formula:

$$\sigma = \sqrt{\frac{\sum (X_i - x)^2}{n - 1}}$$

Where:

$X_i$ = Emission test result for an individual engine.

* * * * *

(g) Continue testing any engine family for which the sample mean, x, is greater than the emission standard. This applies if the sample mean for either $HC+NO_X$ or for CO is greater than the emission standard. Continue testing until one of the following things happens:

(1) The number of tests completed in an engine family, n, is greater than the required sample size, N, and the sample mean, x, is less than or equal to the emission standard. For example, if N = 3.1 after the third test, the sample-size calculation does not allow you to stop testing.

(2) The engine family does not comply according to § 1048.315.

(3) You test 30 engines from the engine family.

(4) You test one percent of your projected annual U.S.-directed production volume for the engine family, rounded to the nearest whole number. If your projected production is between 150 and 750 engines, test engines as specified in paragraph (b) of this section until you have tested one percent of your projected annual U.S.-directed production volume. For example, if projected volume is 475 engines, test two engines in each of the first two quarters and one engine in the third quarter to fulfill your testing requirements under this section for that engine family. If your projected production volume is less than 150, you must test at least two engines.

(5) You choose to declare that the engine family does not comply with the requirements of this subpart.

(h) If the sample-size calculation allows you to stop testing for a pollutant, you must continue measuring emission levels of that pollutant for any additional tests required under this section. However, you need not continue making the calculations specified in this section for that pollutant. This paragraph (h) does not affect the requirements in § 1048.320.

(i) You may elect to test more randomly chosen engines than we require under this section. Include these engines in the sample-size calculations.

■ 242. Section 1048.315 is amended by revising the introductory text to read as follows:

**§ 1048.315 How do I know when my engine family fails the production-line testing requirements?**

This section describes the pass/fail criteria for the production-line testing requirements. We apply these criteria on an engine-family basis. See § 1048.320 for the requirements that apply to individual engines that fail a production-line test.

* * * * *

■ 243. Section 1048.325 is amended by revising paragraph (d) to read as follows:

**§ 1048.325 What happens if an engine family fails the production-line requirements?**

* * * * *

(d) Section 1048.335 specifies steps you must take to remedy the cause of the engine family's production-line failure. All the engines you have produced since the end of the last test period are presumed noncompliant and should be addressed in your proposed remedy. We may require you to apply the remedy to engines produced earlier if we determine that the cause of the

failure is likely to have affected the earlier engines.

■ 244. Section 1048.345 is amended by revising paragraph (d) to read as follows:

**§ 1048.345 What production-line testing records must I send to EPA?**

* * * * *

(d) Send electronic reports of production-line testing to the Designated ComplianceOfficer using an approved information format. If you want to use a different format, send us a written request with justification for a waiver.

* * * * *

■ 245. Section 1048.350 is amended by revising paragraph (a) to read as follows:

**§ 1048.350 What records must I keep?**

(a) Organize and maintain your records as described in this section. We may review your records at any time.

* * * * *

■ 246. Section 1048.420 is amended by revising paragraph (b) to read as follows:

**§ 1048.420 What in-use testing information must I report to EPA?**

* * * * *

(b) Send electronic reports of in-use testing to the Designated Compliance Officer using an approved information format. If you want to use a different format, send us a written request with justification for a waiver.

* * * * *

■ 247. Section 1048.425 is amended by revising paragraph (a) to read as follows:

**§ 1048.425 What records must I keep?**

(a) Organize and maintain your records as described in this section. We may review your records at any time.

* * * * *

■ 248. Section 1048.501 is revised to read as follows:

**§ 1048.501 How do I run a valid emission test?**

(a) Use the equipment and procedures for spark-ignition engines in 40 CFR part 1065 to determine whether engines meet the duty-cycle emission standards in § 1048.101(a) and (b). Measure the emissions of all the pollutants we regulate in § 1048.101 using the sampling procedures specified in 40 CFR part 1065. Use the applicable duty cycles specified in §§ 1048.505 and 1048.510.

(b) Section 1048.515 describes the supplemental procedures for evaluating whether engines meet the field-testing emission standards in § 1048.101(c).

(c) Use the fuels specified in 40 CFR part 1065, subpart C, to perform valid tests for all the testing we require in this part, except as noted in § 1048.515. For service accumulation, use the test fuel or any commercially available fuel that is representative of the fuel that in-use engines will use.

(d) In place of the provisions of 40 CFR 1065.405, you may consider emission levels stable without measurement after 50 hours of engine operation.

(e) To test engines for evaporative emissions, use the equipment and procedures specified for testing diurnal emissions in 40 CFR 86.107–96 and 86.133–96 with fuel meeting the specifications in 40 CFR part 1065, subpart C. Measure emissions from a test engine with a complete fuel system. Reported emission levels must be based on the highest emissions from three successive 24-hour periods of cycling temperatures. Note that you may omit testing for evaporative emissions during certification if you certify by design, as specified in § 1048.245.

(f) You may use special or alternate procedures to the extent we allow them under 40 CFR 1065.10.

(g) This subpart is addressed to you as a manufacturer, but it applies equally to anyone who does testing for you, and to us when we perform testing to determine if your engines meet emission standards.

(h) Map all engines (including constant-speed engines) using the procedures specified in 40 CFR part 1065 for variable-speed engines. For constant-speed engines, continue the mapping procedure until you reach the high-idle speed (the highest speed at which the engine produces zero torque).

■ 249. Section 1048.505 is revised to read as follows:

**§ 1048.505 How do I test engines using steady-state duty cycles, including ramped-modal testing?**

This section describes how to test engines under steady-state conditions. In some cases, we allow you to choose the appropriate steady-state duty cycle for an engine. In these cases, you must use the duty cycle you select in your application for certification for all testing you perform for that engine family. If we test your engines to confirm that they meet emission standards, we will use the duty cycles you select for your own testing. We may also perform other testing as allowed by the Clean Air Act.

(a) You may perform steady-state testing with either discrete-mode or ramped-modal cycles, as follows:

(1) For discrete-mode testing, sample emissions separately for each mode, then calculate an average emission level for the whole cycle using the weighting factors specified for each mode. Calculate cycle statistics for the sequence of modes and compare with the specified values in 40 CFR 1065.514 to confirm that the test is valid. Operate the engine and sampling system as follows:

(i) *Engines with lean $NO_X$ aftertreatment.* For lean-burn engines that depend on aftertreatment to meet the $NO_X$ emission standard, operate the engine for 5–6 minutes, then sample emissions for 1–3 minutes in each mode.

(ii) *Engines without lean $NO_X$ aftertreatment.* For other engines, operate the engine for at least 5 minutes, then sample emissions for at least 1 minute in each mode. Calculate cycle statistics for the sequence of modes and compare with the specified values in 40 CFR part 1065 to confirm that the test is valid.

(2) For ramped-modal testing, start sampling at the beginning of the first mode and continue sampling until the end of the last mode. Calculate emissions and cycle statistics the same as for transient testing.

(b) Measure emissions by testing the engine on a dynamometer with one or more of the following sets of duty cycles to determine whether it meets the steady-state emission standards in § 1048.101(b):

(1) For engines from an engine family that will be used only in variable-speed applications, use one of the following duty cycles:

(i) The following duty cycle applies for discrete-mode testing:

TABLE 1 OF § 1048.505

| C2 Mode No. | Engine speed [1] | Observed torque [2] | Minimum time in mode (minutes) | Weighting factors |
|---|---|---|---|---|
| 1 | Maximum test speed | 25 | 3.0 | 0.06 |
| 2 | Intermediate test speed | 100 | 3.0 | 0.02 |
| 3 | Intermediate test speed | 75 | 3.0 | 0.05 |

TABLE 1 OF § 1048.505—Continued

| C2 Mode No. | Engine speed [1] | Observed torque [2] | Minimum time in mode (minutes) | Weighting factors |
|---|---|---|---|---|
| 4 | Intermediate test speed | 50 | 3.0 | 0.32 |
| 5 | Intermediate test speed | 25 | 3.0 | 0.30 |
| 6 | Intermediate test speed | 10 | 3.0 | 0.10 |
| 7 | Idle | 0 | 3.0 | 0.15 |

[1] Speed terms are defined in 40 CFR part 1065.
[2] The percent torque is relative to the maximum torque at the given engine speed.

(ii) The following duty cycle applies for ramped-modal testing:

TABLE 2 OF § 1048.505

| RMC mode | Time in mode (seconds) | Engine speed [1, 2] | Torque (percent) [2, 3] |
|---|---|---|---|
| 1a Steady-state | 119 | Warm Idle | 0 |
| 1b Transition | 20 | Linear Transition | Linear Transition. |
| 2a Steady-state | 29 | Intermediate Speed | 100 |
| 2b Transition | 20 | Intermediate Speed | Linear Transition. |
| 3a Steady-state | 150 | Intermediate Speed | 10 |
| 3b Transition | 20 | Intermediate Speed | Linear Transition. |
| 4a Steady-state | 80 | Intermediate Speed | 75 |
| 4b Transition | 20 | Intermediate Speed | Linear Transition. |
| 5a Steady-state | 513 | Intermediate Speed | 25 |
| 5b Transition | 20 | Intermediate Speed | Linear Transition. |
| 6a Steady-state | 549 | Intermediate Speed | 50 |
| 5b Transition | 20 | Linear Transition | Linear Transition. |
| 6a Steady-state | 96 | Maximum test speed | 25 |
| 6b Transition | 20 | Linear Transition | Linear Transition. |
| 7 Steady-state | 124 | Warm Idle | 0 |

[1] Speed terms are defined in 40 CFR part 1065.
[2] Advance from one mode to the next within a 20-second transition phase. During the transition phase, command a linear progression from the torque setting of the current mode to the torque setting of the next mode.
[3] The percent torque is relative to maximum torque at the commanded engine speed.

(2) For engines from an engine family that will be used only at a single, rated speed, use one of the following duty cycles:

(i) The following duty cycle applies for discrete-mode testing:

TABLE 3 OF § 1048.505

| D2 mode No. | Engine speed | Torque [1] | Minimum time in mode (minutes) | Weighting factors |
|---|---|---|---|---|
| 1 | Maximum test | 100 | 3.0 | 0.05 |
| 2 | Maximum test | 75 | 3.0 | 0.25 |
| 3 | Maximum test | 50 | 3.0 | 0.30 |
| 4 | Maximum test | 25 | 3.0 | 0.30 |
| 5 | Maximum test | 10 | 3.0 | 0.10 |

[1] The percent torque is relative to the maximum torque at maximum test speed.

(ii) The following duty cycle applies for ramped-modal testing:

TABLE 4 OF § 1048.505

| RMC mode | Time in mode (seconds) | Engine speed | Torque (percent) [1 2] |
|---|---|---|---|
| 1a Steady-state | 53 | Engine Governed | 100 |
| 1b Transition | 20 | Engine Governed | Linear transition. |
| 2a Steady-state | 101 | Engine Governed | 10 |
| 2b Transition | 20 | Engine Governed | Linear transition. |
| 3a Steady-state | 277 | Engine Governed | 75 |
| 3b Transition | 20 | Engine Governed | Linear transition. |

TABLE 4 OF § 1048.505—Continued

| RMC mode | Time in mode (seconds) | Engine speed | Torque (percent) [1 2] |
|---|---|---|---|
| 4a Steady-state | 339 | Engine Governed | 25 |
| 4b Transition | 20 | Engine Governed | Linear transition. |
| 5 Steady-state | 350 | Engine Governed | 50 |

[1] The percent torque is relative to maximum test torque.
[2] Advance from one mode to the next within a 20-second transition phase. During the transition phase, command a linear progression from the torque setting of the current mode to the torque setting of the next mode.

(3) Use a duty cycle from both paragraphs (b)(1) and (b)(2) of this section if you will not restrict an engine family to constant-speed or variable-speed applications.

(4) Use a duty cycle specified in paragraph (b)(2) of this section for all severe-duty engines.

(5) For high-load engines, use one of the following duty cycles:

(i) The following duty cycle applies for discrete-mode testing:

TABLE 5 OF § 1048.505

| D1 mode No. | Engine speed | Torque [1] | Minimum time in mode (minutes) | Weighting factors |
|---|---|---|---|---|
| 1 | Maximum test | 100 | 3.0 | 0.50 |
| 2 | Maximum test | 75 | 3.0 | 0.50 |

[1] The percent torque is relative to the maximum torque at maximum test speed.

(ii) The following duty cycle applies for discrete-mode testing:

TABLE 6 OF § 1048.505

| RMC modes | Time in mode (seconds) | Engine speed (percent) | Torque (percent) [1, 2] |
|---|---|---|---|
| 1a Steady-state | 290 | Engine Governed | 100 |
| 1b Transition | 20 | Engine Governed | Linear Transition. |
| 2 Steady-state | 290 | Engine Governed | 75 |

[1] The percent torque is relative to maximum test torque.
[2] Advance from one mode to the next within a 20-second transition phase. During the transition phase, command a linear progression from the torque setting of the current mode to the torque setting of the next mode.

(c) If we test an engine to confirm that it meets the duty-cycle emission standards, we will use the steady-state duty cycles that apply for that engine family.

(d) During idle mode, operate the engine with the following parameters:

(1) Hold the speed within your specifications.

(2) Set the engine to operate at its minimum fueling rate.

(3) Keep engine torque under 5 percent of maximum test torque.

(e) For full-load operating modes, operate the engine at wide-open throttle.

(f) See 40 CFR part 1065 for detailed specifications of tolerances and calculations.

(g) For those cases where transient testing is not necessary, perform the steady-state test according to this section after an appropriate warm-up period, consistent with 40 CFR part 1065, subpart F.

■ 250. Section 1048.510 is amended by revising the section heading and paragraphs (a) and (c)(1) to read as follows:

**§ 1048.510 Which duty cycles do I use for transient testing?**

(a) Starting with the 2007 model year, measure emissions by testing the engine on a dynamometer with one of the following transient duty cycles to determine whether it meets the transient emission standards in § 1048.101(a):

(1) For constant-speed engines and severe-duty engines, use the transient duty-cycle described in Appendix I of this part.

(2) For all other engines, use the transient duty cycle described in Appendix II of this part.

* * * * *

(c) * * *

(1) Operate the engine for the first 180 seconds of the appropriate duty cycle from Appendix I or Appendix II of this part, then allow it to idle without load for 30 seconds. At the end of the 30-second idling period, start measuring emissions as the engine operates over the prescribed duty cycle. For severe-duty engines, this engine warm-up procedure may include up to 15 minutes of operation over the appropriate duty cycle.

* * * * *

■ 251. Section 1048.515 is amended by revising the section heading and paragraphs (a)(1) and (a)(2) to read as follows:

**§ 1048.515 What are the field-testing procedures?**

(a) * * *

(1) Remove the selected engines for testing in a laboratory. You may use an engine dynamometer to simulate normal operation, as described in this section.

(2) Test the selected engines while they remain installed in the equipment. In 40 CFR part 1065, subpart J, we

describe the equipment and sampling methods for testing engines in the field. Use fuel meeting the specifications of 40 CFR part 1065, subpart H, or a fuel typical of what you would expect the engine to use in service.

* * * * *

■ 252. Section 1048.601 is revised to read as follows:

**§ 1048.601 What compliance provisions apply to these engines?**

Engine and equipment manufacturers, as well as owners, operators, and rebuilders of engines subject to the requirements of this part, and all other persons, must observe the provisions of this part, the requirements and prohibitions in 40 CFR part 1068, and the provisions of the Act.

■ 253. Section 1048.605 is revised to read as follows:

**§ 1048.605 What provisions apply to engines certified under the motor-vehicle program?**

(a) *General provisions.* If you are an engine manufacturer, this section allows you to introduce new nonroad engines into commerce if they are already certified to the requirements that apply to engines under 40 CFR parts 85 and 86 for the appropriate model year. If you comply with all the provisions of this section, we consider the certificate issued under 40 CFR part 86 for each engine to also be a valid certificate of conformity under this part 1048 for its model year, without a separate application for certification under the requirements of this part 1048. See § 1048.610 for similar provisions that apply to engines certified to chassis-based standards for motor vehicles.

(b) *Equipment-manufacturer provisions.* If you are not an engine manufacturer, you may produce nonroad equipment using motor-vehicle engines under this section as long as you meet all the requirements and conditions specified in paragraph (d) of this section. If you modify the motor-vehicle engine in any of the ways described in paragraph (d)(2) of this section, we will consider you a manufacturer of a new nonroad engine. Such engine modifications prevent you from using the provisions of this section.

(c) *Liability.* Engines for which you meet the requirements of this section are exempt from all the requirements and prohibitions of this part, except for those specified in this section. Engines exempted under this section must meet all the applicable requirements from 40 CFR parts 85 and 86. This applies to engine manufacturers, equipment manufacturers who use these engines, and all other persons as if these engines were used in a motor vehicle. The prohibited acts of 40 CFR 1068.101(a)(1) apply to these new engines and equipment; however, we consider the certificate issued under 40 CFR part 86 for each engine to also be a valid certificate of conformity under this part 1048 for its model year. If we make a determination that these engines do not conform to the regulations during their useful life, we may require you to recall them under 40 CFR part 86 or 40 CFR 1068.505.

(d) *Specific requirements.* If you are an engine manufacturer or equipment manufacturer and meet all the following criteria and requirements regarding your new nonroad engine, the engine is eligible for an exemption under this section:

(1) Your engine must be covered by a valid certificate of conformity issued under 40 CFR part 86.

(2) You must not make any changes to the certified engine that could reasonably be expected to increase its exhaust emissions for any pollutant, or its evaporative emissions. For example, if you make any of the following changes to one of these engines, you do not qualify for this exemption:

(i) Change any fuel system or evaporative system parameters from the certified configuration (this does not apply to refueling controls).

(ii) Change, remove, or fail to properly install any other component, element of design, or calibration specified in the engine manufacturer's application for certification. This includes aftertreatment devices and all related components.

(iii) Modify or design the engine cooling system so that temperatures or heat rejection rates are outside the original engine manufacturer's specified ranges.

(3) You must show that fewer than 50 percent of the engine family's total sales in the United States are used in nonroad applications. This includes engines used in any application without regard to which company manufactures the vehicle or equipment. Show this as follows:

(i) If you are the original manufacturer of the engine, base this showing on your sales information.

(ii) In all other cases, you must get the original manufacturer of the engine to confirm this based on its sales information.

(4) You must ensure that the engine has the label we require under 40 CFR part 86.

(5) You must add a permanent supplemental label to the engine in a position where it will remain clearly visible after installation in the equipment. In the supplemental label, do the following:

(i) Include the heading: ''NONROAD ENGINE EMISSION CONTROL INFORMATION''.

(ii) Include your full corporate name and trademark. You may instead include the full corporate name and trademark of another company you choose to designate.

(iii) State: ''THIS ENGINE WAS ADAPTED FOR NONROAD USE WITHOUT AFFECTING ITS EMISSION CONTROLS. THE EMISSION-CONTROL SYSTEM DEPENDS ON THE USE OF FUEL MEETING SPECIFICATIONS THAT APPLY FOR MOTOR-VEHICLE APPLICATIONS. OPERATING THE ENGINE ON OTHER FUELS MAY BE A VIOLATION OF FEDERAL LAW.''.

(iv) State the date you finished modifying the engine (month and year), if applicable.

(6) The original and supplemental labels must be readily visible after the engine is installed in the equipment or, if the equipment obscures the engine's emission control information label, the equipment manufacturer must attach duplicate labels, as described in 40 CFR 1068.105.

(7) Send the Designated Compliance Officer a signed letter by the end of each calendar year (or less often if we tell you) with all the following information:

(i) Identify your full corporate name, address, and telephone number.

(ii) List the engine or equipment models you expect to produce under this exemption in the coming year.

(iii) State: ''We produce each listed [engine or equipment] model for nonroad application without making any changes that could increase its certified emission levels, as described in 40 CFR 1048.605.''.

(e) *Failure to comply.* If your engines do not meet the criteria listed in paragraph (d) of this section, they will be subject to the standards, requirements, and prohibitions of this part 1048 and the certificate issued under 40 CFR part 86 will not be deemed to also be a certificate issued under this part 1048. Introducing these engines into commerce without a valid exemption or certificate of conformity under this part violates the prohibitions in 40 CFR 1068.101(a)(1).

(f) *Data submission.* We may require you to send us emission test data on any applicable nonroad duty cycles.

(g) *Participation in averaging, banking and trading.* Engines adapted for nonroad use under this section may generate credits under the ABT provisions in 40 CFR part 86. These

engines must use emission credits under 40 CFR part 86 if they are certified to an FEL that exceeds an applicable standard under 40 CFR part 86.

■ 254. Section 1048.610 is revised to read as follows:

**§ 1048.610 What provisions apply to vehicles certified under the motor-vehicle program?**

(a) *General provisions.* If you are a motor-vehicle manufacturer, this section allows you to introduce new nonroad engines or equipment into commerce if the vehicle is already certified to the requirements that apply under 40 CFR parts 85 and 86 for the appropriate model year. If you comply with all of the provisions of this section, we consider the certificate issued under 40 CFR part 86 for each motor vehicle to also be a valid certificate of conformity for the engine under this part 1048 for its model year, without a separate application for certification under the requirements of this part 1048. See § 1048.605 or similar provisions that apply to motor-vehicle engines produced for nonroad equipment. The provisions of this section do not apply to engines certified to meet the requirements for highway motorcycles.

(b) *Equipment-manufacturer provisions.* If you are not a motor-vehicle manufacturer, you may produce nonroad equipment from motor vehicles under this section as long as you meet all the requirements and conditions specified in paragraph (d) of this section. If you modify the motor vehicle or its engine in any of the ways described in paragraph (d)(2) of this section, we will consider you a manufacturer of a new nonroad engine. Such modifications prevent you from using the provisions of this section.

(c) *Liability.* Engines, vehicles, and equipment for which you meet the requirements of this section are exempt from all the requirements and prohibitions of this part, except for those specified in this section. Engines exempted under this section must meet all the applicable requirements from 40 CFR parts 85 and 86. This applies to engine manufacturers, equipment manufacturers, and all other persons as if the nonroad equipment were motor vehicles. The prohibited acts of 40 CFR 1068.101(a)(1) apply to these new pieces of equipment; however, we consider the certificate issued under 40 CFR part 86 for each motor vehicle to also be a valid certificate of conformity for the engine under this part 1048 for its model year. If we make a determination that these engines, vehicles, or equipment do not conform to the regulations during their useful life, we may require you to recall them under 40 CFR part 86 or 40 CFR 1068.505.

(d) *Specific requirements.* If you are a motor-vehicle manufacturer and meet all the following criteria and requirements regarding your new nonroad equipment and its engine, the engine is eligible for an exemption under this section:

(1) Your equipment must be covered by a valid certificate of conformity as a motor vehicle issued under 40 CFR part 86.

(2) You must not make any changes to the certified vehicle that we could reasonably expect to increase its exhaust emissions for any pollutant, or its evaporative emissions if it is subject to evaporative-emission standards. For example, if you make any of the following changes, you do not qualify for this exemption:

(i) Change any fuel system or evaporative system parameters from the certified configuration, including refueling emission controls.

(ii) Change, remove, or fail to properly install any other component, element of design, or calibration specified in the vehicle manufacturer's application for certification. This includes aftertreatment devices and all related components.

(iii) Modify or design the engine cooling system so that temperatures or heat rejection rates are outside the original vehicle manufacturer's specified ranges.

(iv) Add more than 500 pounds to the curb weight of the originally certified motor vehicle.

(3) You must show that fewer than 50 percent of the engine family's total sales in the United States are used in nonroad applications. This includes any type of vehicle, without regard to which company completes the manufacturing of the nonroad equipment. Show this as follows:

(i) If you are the original manufacturer of the vehicle, base this showing on your sales information.

(ii) In all other cases, you must get the original manufacturer of the vehicle to confirm this based on their sales information.

(4) The equipment must have the vehicle emission control information and fuel labels we require under 40 CFR 86.007–35.

(5) You must add a permanent supplemental label to the equipment in a position where it will remain clearly visible. In the supplemental label, do the following:

(i) Include the heading: ''NONROAD ENGINE EMISSION CONTROL INFORMATION''.

(ii) Include your full corporate name and trademark. You may instead include the full corporate name and trademark of another company you choose to designate.

(iii) State: ''THIS VEHICLE WAS ADAPTED FOR NONROAD USEWITHOUT AFFECTING ITS EMISSION CONTROLS. THEEMISSION-CONTROL SYSTEM DEPENDS ON THE USE OF FUELMEETING SPECIFICATIONS THAT APPLY FOR MOTOR-VEHICLEAPPLICATIONS. OPERATING THE ENGINE ON OTHER FUELSMAY BE A VIOLATION OF FEDERAL LAW.''.

(iv) State the date you finished modifying the vehicle (month and year), if applicable.

(6) The original and supplemental labels must be readily visible in the fully assembled equipment.

(7) Send the Designated Compliance Officer a signed letter by the end of each calendar year (or less often if we tell you) with all the following information:

(i) Identify your full corporate name, address, and telephone number.

(ii) List the equipment models you expect to produce under this exemption in the coming year.

(iii) State: ''We produced each listed engine or equipment model for nonroad application without making any changes that could increase its certified emission levels, as described in 40 CFR 1048.610.''.

(e) *Failure to comply.* If your engines, vehicles, or equipment do not meet the criteria listed in paragraph (d) of this section, the engines will be subject to the standards, requirements, and prohibitions of this part 1048, and the certificate issued under 40 CFR part 86 will not be deemed to also be a certificate issued under this part 1048. Introducing these engines into commerce without a valid exemption or certificate of conformity under this part violates the prohibitions in 40 CFR 1068.101(a)(1).

(f) *Data submission.* We may require you to send us emission test data on any applicable nonroad duty cycles.

(g) *Participation in averaging, banking and trading.* Vehicles adapted for nonroad use under this section may generate credits under the ABT provisions in 40 CFR part 86. These vehicles must use emission credits under 40 CFR part 86 if they are certified to an FEL that exceeds an applicable standard under 40 CFR part 86.

■ 255. Section 1048.615 is amended by revising paragraphs (a)(2), (a)(3), (c), and (d) to read as follows:

**§ 1048.615 What are the provisions for exempting engines designed for lawn and garden applications?**

* * * * *

(a) * * *

(2) The engine must have a maximum engine power at or below 30 kW.

(3) The engine must be in an engine family that has a valid certificate of conformity showing that it meets emission standards for Class II engines under 40 CFR part 90 for the appropriate model year.

* * * * *

(c) If your engines do not meet the criteria listed in paragraph (a) of this section, they will be subject to the provisions of this part. Introducing these engines into commerce without a valid exemption or certificate of conformity violates the prohibitions in 40 CFR 1068.101.

(d) Engines exempted under this section are subject to all the requirements affecting engines under 40 CFR part 90. The requirements and restrictions of 40 CFR part 90 apply to anyone manufacturing these engines, anyone manufacturing equipment that uses these engines, and all other persons in the same manner as if these engines had a total maximum engine power at or below 19 kW.

■ 256. Section 1048.620 is revised to read as follows:

**§ 1048.620 What are the provisions for exempting large engines fueled by natural gas?**

(a) If an engine meets all the following criteria, it is exempt from the requirements of this part:

(1) The engine must operate solely on natural gas or liquefied petroleum gas.

(2) The engine must have maximum engine power at or above 250 kW.

(3) The engine must be in an engine family that has a valid certificate of conformity showing that it meets emission standards for engines of that power rating under 40 CFR part 89 or 1039.

(b) The only requirements or prohibitions from this part that apply to an engine that is exempt under this section are in this section.

(c) If your engines do not meet the criteria listed in paragraph (a) of this section, they will be subject to the provisions of this part. Introducing these engines into commerce without a valid exemption or certificate of conformity violates the prohibitions in 40 CFR 1068.101.

(d) Engines exempted under this section are subject to all the requirements affecting engines under 40 CFR part 89 or 1039. The requirements and restrictions of 40 CFR part 89 or 1039 apply to anyone manufacturing these engines, anyone manufacturing equipment that uses these engines, and all other persons in the same manner as if these were nonroad diesel engines.

(e) You may request an exemption under this section by submitting an application for certification for the engines under 40 CFR part 89 or 1039.

■ 257. Section 1048.625 is revised to read as follows:

**§ 1048.625 What special provisions apply to engines using noncommercial fuels?**

In § 1048.115(e), we generally require that engines meet emission standards for any adjustment within the full range of any adjustable parameters. For engines that use noncommercial fuels significantly different than the specified test fuel of the same type, you may ask to use the parameter-adjustment provisions of this section instead of those in § 1048.115(e). Engines certified under this section must be in a separate engine family.

(a) If we approve your request, the following provisions apply:

(1) You must certify the engine using the test fuel specified in § 1048.501.

(2) You may produce the engine without limits or stops that keep the engine adjusted within the certified range.

(3) You must specify in-use adjustments different than the adjustable settings appropriate for the specified test fuel, consistent with the provisions of paragraph(b)(1) of this section.

(b) To produce engines under this section, you must do the following:

(1) Specify in-use adjustments needed so the engine's level of emission control for each regulated pollutant is equivalent to that from the certified configuration.

(2) Add the following information to the emission control information label specified in § 1048.135:

(i) Include instructions describing how to adjust the engine to operate in a way that maintains the effectiveness of the emission-control system.

(ii) State: ''THIS ENGINE IS CERTIFIED TO OPERATE IN APPLICATIONS USING NONCOMMERCIAL FUEL. MALADJUSTMENT OF THE ENGINE IS A VIOLATION OFFEDERAL LAW SUBJECT TO CIVIL PENALTY.''.

(3) Keep records to document the destinations and quantities of engines produced under this section.

■ 258. A new § 1048.630 is added to subpart G to read as follows:

**§ 1048.630 What are the provisions for exempting engines used solely for competition?**

The provisions of this section apply for new engines built on or after January 1, 2006.

(a) Equipment manufacturers may use uncertified engines if the vehicles or equipment in which they are installed will be used solely for competition.

(b) The definition of nonroad engine in 40 CFR 1068.30 excludes engines used solely for competition. These engines are not required to comply with this part 1048, but 40 CFR 1068.101 prohibits the use of competition engines for noncompetition purposes.

(c) We consider a vehicle or piece of equipment to be one that will be used solely for competition if it has features that are not easily removed that would make its use other than in competition unsafe, impractical, or highly unlikely.

(d) As an engine manufacturer, your engine is exempt without our prior approval if you have a written request for an exempted engine from the equipment manufacturer showing the basis for believing that the equipment will be used solely for competition. You must permanently label engines exempted under this section to clearly indicate that they are to be used solely for competition. Failure to properly label an engine will void the exemption.

(e) We may discontinue an exemption under this section if we find that engines are not used solely for competition.

■ 259. A new § 1048.635 is added to subpart G to read as follows:

**§ 1048.635 What special provisions apply to branded engines?**

The following provisions apply if you identify the name and trademark of another company instead of your own on your emission control information label, as provided by § 1048.135(c)(2):

(a) You must have a contractual agreement with the other company that obligates that company to take the following steps:

(1) Meet the emission warranty requirements that apply under § 1048.120. This may involve a separate agreement involving reimbursement of warranty-related expenses.

(2) Report all warranty-related information to the certificate holder.

(b) In your application for certification, identify the company whose trademark you will use and describe the arrangements you have made to meet your requirements under this section.

(c) You remain responsible for meeting all the requirements of this chapter, including warranty and defect-reporting provisions.

■ 260. Section 1048.801 is revised to read as follows:

**§ 1048.801 What definitions apply to this part?**

The following definitions apply to this part. The definitions apply to all subparts unless we note otherwise. All undefined terms have the meaning the Act gives to them. The definitions follow:

*Act* means the Clean Air Act, as amended, 42 U.S.C. 7401–7671q.

*Adjustable parameter* means any device, system, or element of design that someone can adjust (including those which are difficult to access) and that, if adjusted, may affect emissions or engine performance during emission testing or normal in-use operation. This includes, but is not limited to, parameters related to injection timing and fueling rate. You may ask us to exclude a parameter that is difficult to access if it cannot be adjusted to affect emissions without significantly degrading engine performance, or if you otherwise show us that it will not be adjusted in a way that affects emissions during in-use operation.

*Aftertreatment* means relating to a catalytic converter, particulate filter, or any other system, component, or technology mounted downstream of the exhaust valve (or exhaust port) whose design function is to decrease emissions in the engine exhaust before it is exhausted to the environment. Exhaust-gas recirculation (EGR) and turbochargers are not aftertreatment.

*Aircraft* means any vehicle capable of sustained air travel above treetop heights.

*All-terrain* vehicle has the meaning given in 40 CFR 1051.801.

*Amphibious vehicle* means a vehicle with wheels or tracks that is designed primarily for operation on land and secondarily for operation in water.

*Auxiliary emission-control device* means any element of design that senses temperature, motive speed, engine rpm, transmission gear, or any other parameter for the purpose of activating, modulating, delaying, or deactivating the operation of any part of the emission-control system.

*Blue Sky Series engine* means an engine meeting the requirements of § 1048.140.

*Brake power* means the usable power output of the engine, not including power required to fuel, lubricate, or heat the engine, circulate coolant to the engine, or to operate aftertreatment devices.

*Calibration* means the set of specifications and tolerances specific to a particular design, version, or application of a component or assembly capable of functionally describing its operation over its working range.

*Certification* means relating to the process of obtaining a certificate of conformity for an engine family that complies with the emission standards and requirements in this part.

*Certified emission level* means the highest deteriorated emission level in an engine family for a given pollutant from either transient or steady-state testing.

*Compression-ignition* means relating to a type of reciprocating, internal-combustion engine that is not a spark-ignition engine.

*Constant-speed engine* means an engine whose certification is limited to constant-speed operation. Engines whose constant-speed governor function is removed or disabled are no longer constant-speed engines.

*Constant-speed operation* means engine operation with a governor that controls the operator input to maintain an engine at a reference speed, even under changing load. For example, an isochronous governor changes reference speed temporarily during a load change, then returns the engine to its original reference speed after the engine stabilizes. Isochronous governors typically allow speed changes up to 1.0 %. Another example is a speed-droop governor, which has a fixed reference speed at zero load and allows the reference speed to decrease as load increases. With speed-droop governors, speed typically decreases (3 to 10) % below the reference speed at zero load, such that the minimum reference speed occurs near the engine's point of maximum power.

*Crankcase emissions* means airborne substances emitted to the atmosphere from any part of the engine crankcase's ventilation or lubrication systems. The crankcase is the housing for the crankshaft and other related internal parts.

*Critical emission-related component* means any of the following components:

(1) Electronic control units, aftertreatment devices, fuel-metering components, EGR-system components, crankcase-ventilation valves, all components related to charge-air compression and cooling, and all sensors and actuators associated with any of these components.

(2) Any other component whose primary purpose is to reduce emissions.

*Designated Compliance Officer* means the Manager, Engine Programs Group (6405–J), U.S. Environmental Protection Agency, 1200 Pennsylvania Ave., NW., Washington, DC 20460.

*Designated Enforcement Officer* means the Director, Air Enforcement Division (2242A), U.S. Environmental Protection Agency, 1200 Pennsylvania Ave., NW., Washington, DC 20460.

*Deteriorated emission level* means the emission level that results from applying the appropriate deterioration factor to the official emission result of the emission-data engine.

*Deterioration factor* means the relationship between emissions at the end of useful life and emissions at the low-hour test point, expressed in one of the following ways:

(1) For multiplicative deterioration factors, the ratio of emissions at the end of useful life to emissions at the low-hour test point.

(2) For additive deterioration factors, the difference between emissions at the end of useful life and emissions at the low-hour test point.

*Discrete-mode* means relating to the discrete-mode type of steady-state test described in § 1048.505.

*Emission-control system* means any device, system, or element of design that controls or reduces the regulated emissions from an engine.

*Emission-data engine* means an engine that is tested for certification. This includes engines tested to establish deterioration factors.

*Emission-related maintenance* means maintenance that substantially affects emissions or is likely to substantially affect emission deterioration.

*Engine configuration* means a unique combination of engine hardware and calibration within an engine family. Engines within a single engine configuration differ only with respect to normal production variability.

*Engine family* has the meaning given in § 1048.230.

*Engine manufacturer* means the manufacturer of the engine. See the definition of ''manufacturer'' in this section.

*Equipment manufacturer* means a manufacturer of nonroad equipment. All nonroad equipment manufacturing entities under the control of the same person are considered to be a single nonroad equipment manufacturer.

*Excluded* means relating to an engine that either:

(1) Has been determined not to be a nonroad engine, as specified in 40 CFR 1068.30; or

(2) Is a nonroad engine that, according to § 1048.5, is not subject to this part 1048.

*Exempted* has the meaning given in 40 CFR 1068.30.

*Exhaust-gas recirculation* means a technology that reduces emissions by routing exhaust gases that had been exhausted from the combustion chamber(s) back into the engine to be

mixed with incoming air before or during combustion. The use of valve timing to increase the amount of residual exhaust gas in the combustion chamber(s) that is mixed with incoming air before or during combustion is not considered exhaust-gas recirculation for the purposes of this part.

*Fuel system* means all components involved in transporting, metering, and mixing the fuel from the fuel tank to the combustion chamber(s), including the fuel tank, fuel tank cap, fuel pump, fuel filters, fuel lines, carburetor or fuel-injection components, and all fuel-system vents.

*Fuel type* means a general category of fuels such as gasoline or natural gas. There can be multiple grades within a single fuel type, such as winter-grade and summer-grade gasoline.

*Good engineering judgment* has the meaning given in 40 CFR 1068.30. See 40 CFR 1068.5 for the administrative process we use to evaluate good engineering judgment.

*High-cost warranted part* means a component covered by the emission-related warranty with a replacement cost (at the time of certification) exceeding $400 (in 1998 dollars). Adjust this value using the most recent annual average consumer price index information published by the U.S. Bureau of Labor Statistics. For this definition, replacement cost includes the retail cost of the part plus labor and standard diagnosis.

*High-load engine* means an engine for which the engine manufacturer can provide clear evidence that operation below 75 percent of maximum load in its final application will be rare.

*Hydrocarbon (HC)* means the hydrocarbon group on which the emission standards are based for each fuel type, as described in § 1048.101(e).

*Identification number* means a unique specification (for example, a model number/serial number combination) that allows someone to distinguish a particular engine from other similar engines.

*Intermediate test speed* has the meaning given in 40 CFR 1065.1001.

*Low-hour* means relating to an engine with stabilized emissions and represents the undeteriorated emission level. This would generally involve less than 300 hours of operation.

*Manufacturer* has the meaning given in section 216(1) of the Act. In general, this term includes any person who manufactures an engine, vehicle, or piece of equipment for sale in the United States or otherwise introduces a new nonroad engine into commerce in the United States. This includes importers who import engines, equipment, or vehicles for resale.

*Marine engine* means a nonroad engine that is installed or intended to be installed on a marine vessel. This includes a portable auxiliary engine only if its fueling, cooling, or exhaust system is an integral part of the vessel. There are two kinds of marine engines:

(1) Propulsion marine engine means a marine engine that moves a vessel through the water or directs the vessel's movement.

(2) Auxiliary marine engine means a marine engine not used for propulsion.

*Marine vessel* has the meaning given in 1 U.S.C. 3, except that it does not include amphibious vehicles. The definition in 1 U.S.C. 3 very broadly includes every craft capable of being used as a means of transportation on water.

*Maximum engine power* has one of the following meanings:

(1) For engines at or below 30 kW, maximum engine power has the meaning given in 40CFR 90.3.

(2) For engines above 30 kW, maximum engine power has the meaning given in 40 CFR 1039.140

*Maximum test speed* has one of the following meanings:

(1) For variable-speed engines, maximum test speed has the meaning given in 40 CFR 1065.1001.

(2) For transient testing of constant-speed engines, maximum test speed means the highest speed at which the engine produces zero torque.

(3) For steady-state testing of constant-speed engines, maximum test speed means the speed at which the engine produces peak torque.

*Maximum test torque* has the meaning given in 40 CFR 1065.1001.

*Model year* means one of the following things:

(1) For freshly manufactured equipment and engines (see definition of ''new nonroad engine,'' paragraph (1)), model year means one of the following:

(i) Calendar year.

(ii) Your annual new model production period if it is different than the calendar year. This must include January 1 of the calendar year for which the model year is named. It may not begin before January 2 of the previous calendar year and it must end by December 31 of the named calendar year.

(2) For an engine that is converted to a nonroad engine after being placed into service as a motor-vehicle engine or a stationary engine, model year means the calendar year in which the engine was originally produced (see definition of ''new nonroad engine,'' paragraph(2)).

(3) For a nonroad engine excluded under § 1048.5 that is later converted to operate in an application that is not excluded, model year means the calendar year in which the engine was originally produced (see definition of ''new nonroad engine,'' paragraph (3)).

(4) For engines that are not freshly manufactured but are installed in new nonroad equipment, model year means the calendar year in which the engine is installed in the new nonroad equipment (see definition of ''new nonroad engine,'' paragraph (4)).

(5) For imported engines:

(i) For imported engines described in paragraph (5)(i) of the definition of ''new nonroad engine,'' *model year* has the meaning given in paragraphs (1) through (4) of this definition.

(ii) [Reserved]

*Motor vehicle* has the meaning given in 40 CFR 85.1703(a).

*New nonroad engine* means any of the following things:

(1) A freshly manufactured nonroad engine for which the ultimate purchaser has never received the equitable or legal title. This kind of engine might commonly be thought of as ''brand new.'' In the case of this paragraph (1), the engine becomes new when it is fully assembled for the first time. The engine is no longer new when the ultimate purchaser receives the title or the product is placed into service, whichever comes first.

(2) An engine originally manufactured as a motor-vehicle engine or a stationary engine that is later intended to be used in a piece of nonroad equipment. In this case, the engine is no longer a motor-vehicle or stationary engine and becomes a ''new nonroad engine''. The engine is no longer new when it is placed into nonroad service.

(3) A nonroad engine that has been previously placed into service in an application we exclude under § 1048.5, where that engine is installed in a piece of equipment that is covered by this part 1048. The engine is no longer new when it is placed into nonroad service covered by this part 1048. For example, this would apply to a marine-propulsion engine that is no longer used in a marine vessel.

(4) An engine not covered by paragraphs (1) through (3) of this definition that is intended to be installed in new nonroad equipment. The engine is no longer new when the ultimate purchaser receives a title for the equipment or the product is placed into service, whichever comes first. This generally includes installation of used engines in new equipment.

(5) An imported nonroad engine, subject to the following provisions:

(i) An imported nonroad engine covered by a certificate of conformity issued under this part that meets the criteria of one or more of paragraphs (1) through (4) of this definition, where the original engine manufacturer holds the certificate, is new as defined by those applicable paragraphs.

(ii) An imported nonroad engine covered by a certificate of conformity issued under this part, where someone other than the original engine manufacturer holds the certificate (such as when the engine is modified after its initial assembly), becomes new when it is imported. It is no longer new when the ultimate purchaser receives a title for the engine or it is placed into service, whichever comes first.

(iii) An imported nonroad engine that is not covered by a certificate of conformity issued under this part at the time of importation is new, but only if it was produced on or after January 1, 2004. This addresses uncertified engines and equipment initially placed into service that someone seeks to import into the United States. Importation of this kind of new nonroad engine (or equipment containing such an engine) is generally prohibited by 40 CFR part 1068.

*New nonroad equipment* means either of the following things:

(1) A nonroad piece of equipment for which the ultimate purchaser has never received the equitable or legal title. The product is no longer new when the ultimate purchaser receives this title or the product is placed into service, whichever comes first.

(2) An imported nonroad piece of equipment with an engine not covered by a certificate of conformity issued under this part at the time of importation and manufactured afterJanuary 1, 2004.

*Noncommercial fuel* means a combustible product that is not marketed as a commercial fuel, but is used as a fuel for nonroad engines. For example, this includes methane that is produced and released from landfills or oil wells, or similar unprocessed fuels that are not intended to meet any otherwise applicable fuel specifications. See§ 1048.615 for provisions related to engines designed to burn noncommercial fuels.

*Noncompliant engine* means an engine that was originally covered by a certificate of conformity, but is not in the certified configuration or otherwise does not comply with the conditions of the certificate.

*Nonconforming engine* means an engine not covered by a certificate of conformity that would otherwise be subject to emission standards.

*Nonmethane hydrocarbon* means the difference between the emitted mass of total hydrocarbons and the emitted mass of methane.

*Nonroad* means relating to nonroad engines or equipment that includes nonroad engines.

*Nonroad engine* has the meaning given in 40 CFR 1068.30. In general this means all internal-combustion engines except motor vehicle engines, stationary engines, engines used solely for competition, or engines used in aircraft. This part does not apply to all nonroad engines (see § 1048.5).

*Nonroad equipment* means a piece of equipment that is powered by one or more nonroad engines.

*Off-highway motorcycle* has the meaning given in 40 CFR 1051.801. (Note: highway motorcycles are regulated under 40 CFR part 86.)

*Official emission result* means the measured emission rate for an emission-data engine on a given duty cycle before the application of any deterioration factor, but after the applicability of regeneration adjustment factors.

*Owners manual* means a document or collection of documents prepared by the engine manufacturer for the owner or operator to describe appropriate engine maintenance, applicable warranties, and any other information related to operating or keeping the engine. The owners manual is typically provided to the ultimate purchaser at the time of sale.

*Oxides of nitrogen* has the meaning given in 40 CFR part 1065.

*Piece of equipment* means any vehicle, vessel, or other type of equipment using engines to which this part applies.

*Placed into service* means put into initial use for its intended purpose.

*Point of first retail sale* means the location at which the initial retail sale occurs. This generally means an equipment dealership, but may also include an engine seller or distributor in cases where loose engines are sold to the general public for uses such as replacement engines.

*Ramped-modal* means relating to the ramped-modal type of steady-state test described in § 1048.505.

*Rated speed* means the maximum full-load governed speed for governed engines and the speed of maximum power for ungoverned engines.

*Revoke* has the meaning given in 40 CFR 1068.30.

*Round* has the meaning given in 40 CFR 1065.1001, unless otherwise specified.

*Scheduled maintenance* means adjusting, repairing, removing, disassembling, cleaning, or replacing components or systems periodically to keep a part or system from failing, malfunctioning, or wearing prematurely. It also may mean actions you expect are necessary to correct an overt indication of failure or malfunction for which periodic maintenance is not appropriate.

*Severe-duty application* includes concrete saws, concrete pumps, and any other application where an engine manufacturer can provide clear evidence that the majority of installations need air-cooled engines as a result of operation in a severe-duty environment.

*Severe-duty engine* means an engine from an engine family in which the majority of engines are installed in severe-duty applications.

*Small-volume engine manufacturer* means a company with fewer than 200 employees. This includes any employees working for parent or subsidiary companies.

*Snowmobile* has the meaning given in 40 CFR 1051.801.

*Spark-ignition* means relating to a gasoline-fueled engine or any other type of engine with a spark plug (or other sparking device) and with operating characteristics significantly similar to the theoretical Otto combustion cycle. Spark-ignition engines usually use a throttle to regulate intake air flow to control power during normal operation.

*Steady-state* means relating to emission tests in which engine speed and load are held at a finite set of essentially constant values. Steady-state tests are either discrete-mode tests or ramped-modal tests.

*Stoichiometric* means relating to the particular ratio of air and fuel such that if the fuel were fully oxidized, there would be no remaining fuel or oxygen. For example, stoichiometric combustion in a gasoline-fueled engine typically occurs at an air-fuel mass ratio of about 14.7.

*Suspend* has the meaning given in 40 CFR 1068.30.

*Test engine* means an engine in a test sample.

*Test sample* means the collection of engines selected from the population of an engine family for emission testing. This may include testing for certification, production-line testing, or in-use testing.

*Tier 1* means relating to the emission standards and other requirements that apply beginning with the 2004 model year.

*Tier 2* means relating to the emission standards and other requirements that apply beginning with the 2007 model year.

*Total hydrocarbon* means the combined mass of organic compounds measured by the specified procedure for measuring total hydrocarbon, expressed as a hydrocarbon with a hydrogen-to-carbon mass ratio of 1.85:1.

*Total hydrocarbon equivalent* means the sum of the carbon mass contributions of non-oxygenated hydrocarbons, alcohols and aldehydes, or other organic compounds that are measured separately as contained in a gas sample, expressed as exhaust hydrocarbon from petroleum-fueled engines. The hydrogen-to-carbon ratio of the equivalent hydrocarbon is 1.85:1.

*Ultimate purchaser* means, with respect to any new nonroad equipment or new nonroad engine, the first person who in good faith purchases such new nonroad equipment or new nonroad engine for purposes other than resale.

*United States* has the meaning given in 40 CFR 1068.30.

*Upcoming model year* means for an engine family the model year after the one currently in production.

*U.S.-directed production volume* means the number of engine units, subject to the requirements of this part, produced by a manufacturer for which the manufacturer has a reasonable assurance that sale was or will be made to ultimate purchasers in the UnitedStates.

*Useful life* means the period during which the engine is designed to properly function in terms of reliability and fuel consumption, without being remanufactured, specified as a number of hours of operation or calendar years, whichever comes first. It is the period during which a new nonroad engine is required to comply with all applicable emission standards. See § 1048.101(g).

*Variable-speed engine* means an engine that is not a constant-speed engine.

*Variable-speed operation* means engine operation that does not meet the definition of constant-speed operation.

*Void* has the meaning given in 40 CFR 1068.30.

*Volatile liquid fuel* means any fuel other than diesel or biodiesel that is a liquid at atmospheric pressure and has a Reid Vapor Pressure higher than 2.0 pounds per square inch.

*Wide-open throttle* means maximum throttle opening. Unless this is specified at a given speed, it refers to maximum throttle opening at maximum speed. For electronically controlled or other engines with multiple possible fueling rates, wide-open throttle also means the maximum fueling rate at maximum throttle opening under test conditions.

*We (us, our)* means the Administrator of the Environmental Protection Agency and any authorized representatives.

■ 261. Section 1048.805 is amended by adding ''NARA'' to the table in alphabetical order to read as follows:

**§ 1048.805 What symbols, acronyms, and abbreviations does this part use?**

* * * * *

* * * * * * *

NARA ..... National Archives and Records Administration.

* * * * * * *

■ 262. Section 1048.810 is revised to read as follows:

**§ 1048.810 What materials does this part reference?**

Documents listed in this section have been incorporated by reference into this part. The Director of the Federal Register approved the incorporation by reference as prescribed in 5 U.S.C. 552(a) and 1 CFR part 51. Anyone may inspect copies at the U.S. EPA, Air and Radiation Docket and Information Center, 1301 Constitution Ave., NW., Room B102, EPA West Building, Washington, DC 20460 or at the National Archives and Records Administration (NARA). For information on the availability of this material at NARA, call 202–741–6030, or go to: *http://www.archives.gov/federal_register/code_of_federal_regulations/ibr_locations.html.*

(a) [Reserved]

(b) *SAE material.* Table 2 of this section lists material from the Society of AutomotiveEngineering that we have incorporated by reference. The first column lists the number and name of the material. The second column lists the sections of this part where we reference it. Anyone may purchase copies of these materials from the Society of Automotive Engineers, 400 Commonwealth Drive, Warrendale, PA 15096 or *http://www.sae.org.* Table 2 follows:

TABLE 2 OF § 1048.810.—SAE MATERIALS

| Document number and name | Part 1048 reference |
|---|---|
| SAE J1930, Electrical/Electronic Systems Diagnostic Terms, Definitions, Abbreviations, and Acronyms, revised May 1998 ..... | 1048.135 |
| SAE J2260, Nonmetallic Fuel System Tubing with One or More Layers, November 1996 ..... | 1048.105 |

(c) *ISO material.* Table 3 of this section lists material from the International Organization for Standardization that we have incorporated by reference. The first column lists the number and name of the material. The second column lists the section of this part where we reference it. Anyone may purchase copies of these materials from the International Organization for Standardization, Case Postale 56, CH–1211 Geneva 20,Switzerland or *http://www.iso.org.* Table 3 follows:

TABLE 3 OF § 1048.810.—ISO MATERIALS

| Document number and name | Part 1048 reference |
|---|---|
| ISO 9141–2 Road vehicles—Diagnostic systems—Part 2: CARB requirements for interchange of digital information, February 1994 | 1048.110 |
| ISO 14230–4 Road vehicles—Diagnostic systems—Keyword Protocol 2000—Part 4: Requirements for emission-related systems, June 2000 | 1048.110 |

■ 263. Section 1048.815 is revised to read as follows:

**§ 1048.815 What provisions apply to confidential information?**

(a) Clearly show what you consider confidential by marking, circling, bracketing, stamping, or some other method.

(b) We will store your confidential information as described in 40 CFR part 2. Also, we will disclose it only as specified in 40 CFR part 2. This applies both to any information you send us and to any information we collect from inspections, audits, or other site visits.

(c) If you send us a second copy without the confidential information, we will assume it contains nothing confidential whenever we need to release information from it.

(d) If you send us information without claiming it is confidential, we may make it available to the public without further notice to you, as described in 40 CFR 2.204.

■ 264. Section 1048.820 is revised to read as follows:

**§ 1048.820 How do I request a hearing?**

(a) You may request a hearing under certain circumstances, as described elsewhere in this part. To do this, you must file a written request, including a description of your objection and any supporting data, within 30 days after we make a decision.

(b) For a hearing you request under the provisions of this part, we will approve your request if we find that your request raises a substantial factual issue.

(c) If we agree to hold a hearing, we will use the procedures specified in 40 CFR part 1068, subpart G.

■ 265. Appendix I to part 1048 is amended in the table by adding a footnote to read as follows:

**Appendix I to Part 1048—Large Spark-ignition (SI) Transient Cycle for Constant-Speed Engines**

* * * * *

| Time(s) | Normalized speed | Normalized torque[1] |
|---|---|---|
| * | * | * |

[1] The percent torque is relative to maximum torque at the commanded engine speed.

## PART 1051—CONTROL OF EMISSIONS FROM RECREATIONAL ENGINES AND VEHICLES

■ 266. The authority citation for part 1051 is revised to read as follows:

**Authority:** 42 U.S.C. 7401—7671q.

■ 267. The heading for subpart A is revised to read as follows:

### Subpart A—Overview and Applicability

■ 268. Section 1051.1 is revised to read as follows:

**§ 1051.1 Does this part apply for my vehicles or engines?**

(a) The regulations in this part 1051 apply for all the following new recreational vehicles or new engines used in the following recreational vehicles, except as provided in § 1051.5:

(1) Snowmobiles.

(2) Off-highway motorcycles.

(3) All-terrain vehicles (ATVs.)

(4) Offroad utility vehicles with engines with displacement less than or equal to 1000 cc, maximum engine power less than or equal to 30 kW, and maximum vehicle speed of 25 miles per hour or higher. Offroad utility vehicles that are subject to this part are subject to the same requirements as ATVs. This means that any requirement that applies to ATVs also applies to these offroad utility vehicles, without regard to whether the regulatory language mentions offroad utility vehicles.

(b) In certain cases, the regulations in this part 1051 apply to new engines under 50 cc used in motorcycles that are motor vehicles. See 40 CFR 86.447–2006 or 86.448–2006 for provisions related to this allowance.

(c) This part 1051 applies for new recreational vehicles starting in the 2006 model year, except as described in subpart B of this part. You need not follow this part for vehicles you produce before the 2006 model year, unless you certify voluntarily. See §§ 1051.103 through 1051.110, § 1051.145, and the definition of ''model year'' in § 1051.801 for moreinformation about the timing of the requirements.

(d) The requirements of this part begin to apply when a vehicle is new. See the definition of ''new'' in § 1051.801 for more information. In some cases, vehicles or engines that have been previously used may be considered ''new'' for the purposes of this part.

(e) The evaporative emission requirements of this part apply to highway motorcycles, as specified in 40 CFR part 86, subpart E.

■ 269. Section 1051.5 is revised to read as follows:

**§ 1051.5 Which engines are excluded from this part's requirements?**

(a) You may exclude vehicles with compression-ignition engines. See 40 CFR part 89 or 1039 for regulations that cover these engines.

(b) We may require you to label an engine or vehicle (or both) if this section excludes it and other requirements in this chapter do not apply.

■ 270. Section 1051.10 is revised to read as follows:

**§ 1051.10 How is this part organized?**

The regulations in this part 1051 contain provisions that affect both vehicle manufacturers and others. However, the requirements of this part are generally addressed to the vehicle manufacturer. The term ''you'' generally means the vehicle manufacturer, as defined in § 1051.801. This part 1051 is divided into the following subparts:

(a) Subpart A of this part defines the applicability of part 1051 and gives an overview of regulatory requirements.

(b) Subpart B of this part describes the emission standards and other requirements that must be met to certify engines under this part. Note that § 1051.145 discusses certaininterim requirements and compliance provisions that apply only for a limited time.

(c) Subpart C of this part describes how to apply for a certificate of conformity.

(d) Subpart D of this part describes general provisions for testing production-line engines.

(e) [Reserved]

(f) Subpart F of this part describes how to test your engines (including references to other parts of the Code of Federal Regulations).

(g) Subpart G of this part and 40 CFR part 1068 describe requirements, prohibitions, and other provisions that apply to engine manufacturers, equipment manufacturers, owners, operators, rebuilders, and all others.

(h) Subpart H of this part describes how you may generate and use emission credits to certify your engines.

(i) Subpart I of this part contains definitions and other reference information.

■ 271. Section 1051.15 is revised to read as follows:

**§ 1051.15 Do any other regulation parts apply to me?**

(a) Parts 86 and 1065 of this chapter describe procedures and equipment specifications for testing vehicles and engines. Subpart F of this part 1051 describes how to apply the provisions of parts 86 and 1065 of this chapter to determine whether vehicles meet the emission standards in this part.

(b) The requirements and prohibitions of part 1068 of this chapter apply to everyone,including anyone who manufactures, imports, installs, owns, operates, or rebuilds any of the vehicles subject to this part 1051, or vehicles containing these engines. Part 1068 of this chapter describes general provisions, including these seven areas:

(1) Prohibited acts and penalties for manufacturers and others.

(2) Rebuilding and other aftermarket changes.

(3) Exclusions and exemptions for certain vehicles and engines.

(4) Importing vehicles and engines.

(5) Selective enforcement audits of your production.

(6) Defect reporting and recall.

(7) Procedures for hearings.

(c) Other parts of this chapter apply if referenced in this part.

■ 272. Section 1051.101 is amended by revising paragraphs (a)(1), (a)(2), (c), and (f) to read as follows:

**§ 1051.101 What emission standards and other requirements must my vehicles meet?**

(a) * * *

(1) The applicable exhaust emission standards in § 1051.103, § 1051.105, § 1051.107, or § 1051.145.

(i) For snowmobiles, see § 1051.103.

(ii) For off-highway motorcycles, see § 1051.105.

(iii) For all-terrain vehicles and offroad utility vehicles subject to this part, see § 1051.107 and § 1051.145.

(2) The evaporative emission standards in § 1051.110.

* * * * *

(c) These standards and requirements apply to all testing, including certification, production-line, and in-use testing.

* * * * *

(f) As described in § 1051.1(a)(4), offroad utility vehicles that are subject to this part are subject to the same requirements as ATVs.

■ 273. Section 1051.103 is amended by revising paragraph (a)(1) before the table and paragraphs (b) introductory text and (c) introductory text to read as follows:

**§ 1051.103 What are the exhaust emission standards for snowmobiles?**

(a) * * *

(1) Follow Table 1 of this section for exhaust emission standards. You may generate or use emission credits under the averaging, banking, and trading (ABT) program for $HC+NO_X$ and CO emissions, as described in subpart H of this part. This requires that you specify a family emission limit for each pollutant you include in the ABT program for each engine family. These family emission limits serve as the emission standards for the engine family with respect to all required testing instead of the standards specified in this section. An engine family meets emission standards evenif its family emission limit is higher than the standard, as long as you show that the whole averaging set of applicable engine families meets the applicable emission standards using emission credits, and the vehicles within the family meet the family emission limit. The phase-in values specify the percentage of your U.S.-directed production that must comply with the emission standards for those model years. Calculate this compliance percentage based on a simple count of your U.S.-directed production units within each certified engine family compared with a simple count of your total U.S.-directed production units. Table 1 also shows the maximum value you may specify for a family emission limit, as follows:

* * * * *

(b) The exhaust emission standards in this section apply for snowmobiles using the fuel type on which they are designed to operate. You must meet the numerical emission standards for hydrocarbons in this section based on the following types of hydrocarbon emissions for snowmobiles powered by the following fuels:

* * * * *

(c) Your snowmobiles must meet emission standards over their full useful life. The minimum useful life is 8,000 kilometers, 400 hours of engine operation, or five calendar years, whichever comes first. You must specify a longer useful life in terms of kilometers and hours for the engine family if the average service life of your vehicles is longer than the minimum value, as follows:

* * * * *

■ 274. Section 1051.105 is amended by revising paragraph (a)(1) before the table and paragraphs (a)(3), (b) introductory text, and (c) introductory text to read as follows:

**§ 1051.105 What are the exhaust emission standards for off-highway motorcycles?**

(a) * * *

(1) Follow Table 1 of this section for exhaust emission standards. You may generate or use emission credits under the averaging, banking, and trading (ABT) program for $HC+NO_X$ and CO emissions, as described in subpart H of this part. This requires that you specify a family emission limit for each pollutant you include in the ABT program for each engine family. These family emission limits serve as the emission standards for the engine family with respect to all required testing instead of the standards specified in this section. An engine family meets emission standards evenif its family emission limit is higher than the standard, as long as you show that the whole averaging set of applicable engine families meets the applicable emission standards using emission credits, and the vehicles within the family meet the family emission limit. The phase-in values specify the percentage of your U.S.-directed production that must comply with the emission standards for those model years. Calculate this compliance percentage based on a simple count of your U.S.-directed production units within each certified engine family compared with a simple count of your total U.S.-directed production units. Table 1 follows:

* * * * *

(3) You may certify off-highway motorcycles with engines that have total displacement of 70 cc or less to the exhaust emission standards in § 1051.615 instead of certifying them to the exhaust emission standards of this section. Count all such vehicles in the phase-in (percent) requirements of this section.

(b) The exhaust emission standards in this section apply for off-highway motorcycles using the fuel type on which they are designed to operate. You must meet the numerical emission standards for hydrocarbons in this section based on the following types of hydrocarbon emissions for off-highway

motorcycles powered by the following fuels:

* * * * *

(c) Your off-highway motorcycles must meet emission standards over their full useful life. For off-highway motorcycles with engines that have total displacement greater than 70 cc, the minimum useful life is 10,000 kilometers or five years, whichever comes first. For off-highway motorcycles with engines that have total displacement of 70 cc or less, the minimum useful life is 5,000 kilometers or five years, whichever comes first. You must specify a longer useful life for the engine family in terms of kilometers if the average service life of your vehicles is longer than the minimum value, as follows:

* * * * *

■ 275. Section 1051.107 is amended by revising paragraphs (a), (b) introductory text, and

(c) introductory text to read as follows:

**§ 1051.107 What are the exhaust emission standards for all-terrain vehicles (ATVs) and offroad utility vehicles?**

* * * * *

(a) Apply the exhaust emission standards in this section by model year. Measure emissions with the ATV test procedures in subpart F of this part.

(1) Follow Table 1 of this section for exhaust emission standards. You may generate or use emission credits under the averaging, banking, and trading (ABT) program for $HC+NO_X$ emissions, as described in subpart H of this part. This requires that you specify a family emission limit for each pollutant you include in the ABT program for each engine family. These family emission limits serve as the emission standards for the engine family with respect to all required testing instead of the standards specifiedin this section. An engine family meets emission standards even if its family emission limit is higher than the standard, as long as you show that the whole averaging set of applicable engine families meets the applicable emission standards using emission credits, and the vehicles within the family meet the family emission limit. Table 1 also shows the maximum value you may specify for a family emission limit. The phase-in values in the table specify the percentage of your total U.S.-directed production that must comply with the emission standards for those model years.

Calculate this compliance percentage based on a simple count of your U.S.-directed production units within each certified engine family compared with a simple count of your total U.S.-directed production units. This applies to your total production of ATVs and offroad utility vehicles that are subject to the standards of this part; including both ATVs and offroad utility vehicles subject to the standards of this section and ATVs and offroad utility vehicles certified to the standards of other sections in this part 1051 (such as § 1051.615, but not including vehicles certified under other parts in this chapter (such as 40 CFR part 90). Table 1 follows:

TABLE 1 OF § 1051.107.—EXHAUST EMISSION STANDARDS FOR ATVS (G/KM)

| Phase | Model year | Phase-in (percent) | Emission standards | | Maximum allowable family emission limits | |
|---|---|---|---|---|---|---|
| | | | $HC+NO_X$ | CO | $HC+NO_X$ | CO |
| Phase 1 | 2006 | 50 | 1.5 | 35 | 20.0 | |
| | 2007 and later | 100 | 1.5 | 35 | 20.0 | |

(2) You may certify ATVs with engines that have total displacement of less than 100 cc to the exhaust emission standards in § 1051.615 instead of certifying them to the exhaust emission standards of this section. Count all such vehicles in the phase-in(percent) requirements of this section.

(b) The exhaust emission standards in this section apply for ATVs using the fuel type on which they are designed to operate. You must meet the numerical emission standards for hydrocarbons in this section based on the following types of hydrocarbon emissions for ATVs powered by the following fuels:

* * * * *

(c) Your ATVs must meet emission standards over their full useful life. For ATVs with engines that have total displacement of 100 cc or greater, the minimum useful life is 10,000 kilometers, 1000 hours of engine operation, or five years, whichever comes first. For ATVs with engines that have total displacement of less than 100 cc, the minimum useful life is 5,000 kilometers, 500 hours of engine operation, or five years, whichever comes first. You must specify a longer useful life for the engine family in terms of kilometers and hours if the average service life of your vehicles is longer than the minimum value, as follows:

* * * * *

■ 276. Section 1051.110 is amended by revising the introductory text and paragraph (a) to read as follows:

**§ 1051.110 What evaporative emission standards must my vehicles meet?**

Your new vehicles must meet the emission standards of this section over their full useful life. Note that § 1051.245 allows you to use design-based certification instead of generating new emission data.

(a) Beginning with the 2008 model year, permeation emissions from your vehicle's fuel tank(s) may not exceed 1.5 grams per square-meter per day when measured with the test procedures for tank permeation in subpart F of this part. You may generate or use emission credits under the averaging, banking, and trading (ABT) program, as describedin subpart H of this part.

* * * * *

■ 277. Section 1051.115 is amended by removing and reserving paragraph (b), revising paragraphs (a), (c), (f), and (g), and adding a new paragraph (d)(3)(vi) to read as follows:

**§ 1051.115 What other requirements must my vehicles meet?**

* * * * *

(a) *Closed crankcase.* Crankcase emissions may not be discharged directly into the ambient atmosphere from any vehicle throughout its useful life.

* * * * *

(c) *Adjustable parameters.* Vehicles that have adjustable parameters must meet all the requirements of this part for any adjustment in the physically adjustable range. Note that parameters that control the air-fuel ratio may be treated separately under paragraph (d) of this section. An operating parameter is not considered adjustable if you permanently sealit or if it is not normally accessible using ordinary tools. We may require that you set adjustable parameters to any specification within the adjustable range during any testing,including

certification testing, production-line testing, or in-use testing.

(d) * * *

(3) * * *

(vi) The adjustable range of carburetor screws, such as air screw, fuel screw, andidle-speed screw must be defined by stops, limits, or specification on the jetting chart consistent with the requirements for specifying jet sizes and needle configuration in this section.

* * * * *

(f) *Defeat devices.* You may not equip your vehicles with a defeat device. A defeat device is an auxiliary emission-control device that reduces the effectiveness of emission controls under conditions that the vehicle may reasonably be expected to encounter during normal operation and use. This does not apply to auxiliary emission-control devices you identify in your certification application if any of the following is true:

(1) The conditions of concern were substantially included in the applicable test procedures described in subpart F of this part.

(2) You show your design is necessary to prevent vehicle damage or accidents.

(3) The reduced effectiveness applies only to starting the engine.

(g) *Noise standards.* There are no noise standards specified in this part 1051. See 40 CFR Chapter I, Subchapter G, to determine if your vehicle must meet noise emission standards under another part of our regulations.

■ 278. Section 1051.120 is revised to read as follows:

**§ 1051.120 What emission-related warranty requirements apply to me?**

(a) *General requirements.* You must warrant to the ultimate purchaser and each subsequent purchaser that the new engine, including all parts of its emission-control system, meets two conditions:

(1) It is designed, built, and equipped so it conforms at the time of sale to the ultimate purchaser with the requirements of this part.

(2) It is free from defects in materials and workmanship that may keep it from meeting these requirements.

(b) *Warranty period.* Your emission-related warranty must be valid for at least 50 percent of the vehicle's minimum useful life in kilometers or hours of engine operation (where applicable), or at least 30 months, whichever comes first. You may offer an emission-related warranty more generous than we require. The emission-related warranty for the engine may not be shorter than any published warranty you offer without charge for the engine. Similarly, the emission-related warranty for any component may not be shorter than any published warranty you offer without charge for that component. If a vehicle has no odometer, base warranty periods in this paragraph (b) only on the vehicle's age (in years). The warranty period begins when the engine is placed into service.

(c) *Components covered.* The emission-related warranty covers all components whose failure would increase an engine's emissions of any pollutant. This includes components listed in 40 CFR part 1068, Appendix I, and components from any other system you develop to control emissions. The emission-related warranty covers these components even if another company produces the component. Your emission-related warranty does not cover components whose failure would not increase an engine's emissions of any pollutant.

(d) *Limited applicability.* You may deny warranty claims under this section if the operator caused the problem through improper maintenance or use, as described in 40CFR 1068.115. You may ask us to allow you to exclude from your emission-related warranty certified vehicles that have been used significantly for competition, especially certified motorcycles that meet at least four of the criteria in § 1051.620(b)(1).

(e) *Owners manual.* Describe in the owners manual the emission-related warranty provisions from this section that apply to the engine.

■ 279. Section 1051.125 is revised to read as follows:

**§ 1051.125 What maintenance instructions must I give to buyers?**

Give the ultimate purchaser of each new vehicle written instructions for properly maintaining and using the vehicle, including the emission-control system. The maintenance instructions also apply to service accumulation on your emission-data vehicles, as described in § 1051.240, § 1051.245, and 40 CFR part 1065.

(a) *Critical emission-related maintenance.* Critical emission-related maintenanceincludes any adjustment, cleaning, repair, or replacement of critical emission-related components. This may also include additional emission-related maintenance that you determine is critical if we approve it in advance. You may schedule critical emission-related maintenance on these components if you meet the following conditions:

(1) You demonstrate that the maintenance is reasonably likely to be done at the recommended intervals on in-use vehicles. We will accept scheduled maintenance as reasonably likely to occur if you satisfy any of the following conditions:

(i) You present data showing that, if a lack of maintenance increases emissions, it also unacceptably degrades the vehicle's performance.

(ii) You present survey data showing that at least 80 percent of vehicles in the field get the maintenance you specify at the recommended intervals.

(iii) You provide the maintenance free of charge and clearly say so in maintenanceinstructions for the customer.

(iv) You otherwise show us that the maintenance is reasonably likely to be done at the recommended intervals.

(2) You may not schedule critical emission-related maintenance within the minimum useful life period for aftertreatment devices, pulse-air valves, fuel injectors, oxygen sensors, electronic control units, superchargers, or turbochargers.

(b) *Recommended additional maintenance.* You may recommend any additional amount of maintenance on the components listed in paragraph (a) of this section, as long as you state clearly that these maintenance steps are not necessary to keep the emission-related warranty valid. If operators do the maintenance specified in paragraph (a) of this section, but not the recommended additional maintenance, this does not allow you to disqualifythose vehicles from in-use testing or deny a warranty claim. Do not take these maintenance steps during service accumulation on your emission-data vehicles.

(c) *Special maintenance.* You may specify more frequent maintenance to address problems related to special situations, such as atypical vehicle operation. You must clearly state that this additional maintenance is associated with the special situation you are addressing.

(d) *Noncritical emission-related maintenance.* You may schedule any amount of emission-related inspection or maintenance that is not covered by paragraph (a) of this section, as long as you state in the owners manual that these steps are not necessary to keep the emission-related warranty valid. If operators fail to do this maintenance, this does not allow you to disqualify those vehicles from in-use testing or deny a warranty claim. Do not take these inspection or maintenance steps during service accumulation on your emission-data vehicles.

(e) *Maintenance that is not emission-related.* For maintenance unrelated to emission controls, you may schedule any amount of inspection or maintenance. You may also takethese

inspection or maintenance steps during service accumulation on your emission-data vehicles, as long as they are reasonable and technologically necessary. This mightinclude adding engine oil, changing air, fuel, or oil filters, servicing engine-cooling systems, and adjusting idle speed, governor, engine bolt torque, valve lash, or injector lash, or adjusting chain tension, clutch position, or tire pressure. You may perform this nonemission-related maintenance on emission-data vehicles at the least frequent intervalsthat you recommend to the ultimate purchaser (but not the intervals recommended for severe service). You may also visually inspect test vehicles or engines, including emission-related components, as needed to ensure safe operation.

(f) *Source of parts and repairs.* State clearly on the first page of your written maintenanceinstructions that a repair shop or person of the owner's choosing may maintain, replace, or repair emission-control devices and systems. Your instructions may not require components or service identified by brand, trade, or corporate name. Also, do not directly or indirectly condition your warranty on a requirement that the vehicle be serviced by your franchised dealers or any other service establishments with which you have a commercial relationship. You may disregard the requirements in this paragraph (f) if you do one of two things:

(1) Provide a component or service without charge under the purchase agreement.

(2) Get us to waive this prohibition in the public's interest by convincing us the vehicle will work properly only with the identified component or service.

(g) *Payment for scheduled maintenance.* Owners are responsible for properly maintainingtheir vehicles. This generally includes paying for scheduled maintenance. However, manufacturers must pay for scheduled maintenance during the useful life if it meets allthe following criteria:

(1) Each affected component was not in general use on similar vehicles before the 2006 model year.

(2) The primary function of each affected component is to reduce emissions.

(3) The cost of the scheduled maintenance is more than 2 percent of the price of the vehicle.

(4) Failure to perform the maintenance would not cause clear problems that would significantly degrade the vehicle's performance.

(h) *Owners manual.* Explain the owner's responsibility for proper maintenance in the owners manual.

■ 280. Section 1051.130 is revised to read as follows:

**§ 1051.130 What installation instructions must I give to vehicle manufacturers?**

(a) If you sell an engine for someone else to install in a piece of nonroad equipment, givethe engine installer instructions for installing it consistent with the requirements of this part. Include all information necessary to ensure that an engine will be installed in its certified configuration.

(b) Make sure these instructions have the following information:

(1) Include the heading: ''Emission-related installation instructions''.

(2) State: ''Failing to follow these instructions when installing a certified engine in a piece of nonroad equipment violates federal law (40 CFR 1068.105(b)), subject to fines or other penalties as described in the Clean Air Act.''.

(3) Describe the instructions needed to properly install the exhaust system and any other components. Include instructions consistent with the requirements of § 1051.205(r).

(4) Describe the steps needed to comply with the evaporative emission standards in § 1051.110.

(5) Describe any limits on the range of applications needed to ensure that the engine operates consistently with your application for certification. For example, if your engines are certified only to the snowmobile standards, tell vehicle manufacturers notto install the engines in other vehicles.

(6) Describe any other instructions to make sure the installed engine will operate according to design specifications in your application for certification. This mayinclude, for example, instructions for installing aftertreatment devices when installing the engines.

(7) State: ''If you install the engine in a way that makes the engine's emission controlinformation label hard to read during normal engine maintenance, you must place a duplicate label on the vehicle, as described in 40 CFR 1068.105.''.

(c) You do not need installation instructions for engines you install in your own vehicles.

(d) Provide instructions in writing or in an equivalent format. For example, you may post instructions on a publicly available Web site for downloading or printing. If you do not provide the instructions in writing, explain in your application for certification how you will ensure that each installer is informed of the installation requirements.

■ 281. Section 1051.135 is revised to read as follows:

**§ 1051.135 How must I label and identify the vehicles I produce?**

Each of your vehicles must have three labels: a vehicle identification number as described in paragraph (a) of this section, an emission control information label as described in paragraphs (b) through (e) of this section, and a consumer information label as describedin § 1051.137.

(a) Assign each vehicle a unique identification number and permanently affix, engrave, or stamp it on the vehicle in a legible way.

(b) At the time of manufacture, affix a permanent and legible emission control information label identifying each vehicle. The label must be

(1) Attached so it is not removable without being destroyed or defaced.

(2) Secured to a part of the vehicle (or engine) needed for normal operation and not normally requiring replacement.

(3) Durable and readable for the vehicle's entire life.

(4) Written in English.

(c) The label must—

(1) Include the heading ''EMISSION CONTROL INFORMATION''.

(2) Include your full corporate name and trademark. You may identify another company and use its trademark instead of yours if you comply with the provisions of § 1051.645.

(3) Include EPA's standardized designation for engine families, as described in § 1051.230.

(4) State the engine's displacement (in liters). You may omit this from the emission control information label if the vehicle is permanently labeled with a unique model name that corresponds to a specific displacement. Also, you may omit displacement from the label if all the engines in the engine family have the same per-cylinder displacement and total displacement.

(5) State: ''THIS VEHICLE IS CERTIFIED TO OPERATE ON [specify operating fuel or fuels].''.

(6) State the date of manufacture [MONTH and YEAR]. You may omit this from the label if you keep a record of the engine-manufacture dates and provide it to us upon request, or if you stamp the date on the engine or vehicle.

(7) State the exhaust emission standards or FELs to which the vehicles are certified.

(8) Identify the emission-control system. Use terms and abbreviations consistent withSAE J1930 (incorporated by reference in § 1051.810). You may omit this information from the label if

there is not enough room for it and you put it in the owners manualinstead.

(9) List specifications and adjustments for engine tuneups; show the proper position for the transmission during tuneup and state which accessories should be operating.

(10) Identify the fuel type and any requirements for fuel and lubricants. You may omit this information from the label if there is not enough room for it and you put it in the owners manual instead.

(11) State the useful life for your engine family if it is different than the minimum value.

(12) State: ''S VEHICLE MEETS U.S. EPA REGULATIONS FOR [MODEL YEAR] [SNOWMOBILES or OFF-ROAD MOTORCYCLES or ATVs or OFFROAD UTILITY VEHICLES].''.

(d) You may add information to the emission control information label to identify other emission standards that the vehicle meets or does not meet (such as California standards). You may also add other information to ensure that the engine will be properly maintained and used.

(e) You may ask us to approve modified labeling requirements in this part 1051 if you show that it is necessary or appropriate. We will approve your request if your alternate label is consistent with the requirements of this part.

(f) If you obscure the engine label while installing the engine in the equipment such thatthe label will be hard to read during normal maintenance, you must place a duplicate label on the equipment. If others install your engine in their equipment in a way that obscuresthe engine label, we require them to add a duplicate label on the equipment (see 40 CFR 1068.105); in that case, give them the number of duplicate labels they request and keepthe following records for at least five years:

(1) Written documentation of the request from the equipment manufacturer.

(2) The number of duplicate labels you send and the date you sent them.

(g) Label every vehicle certified under this part with a removable hang-tag showing its emission characteristics relative to other models, as described in § 1051.137.

■ 282. A new § 1051.137 is added to read as follows:

**§ 1051.137 What are the consumer labeling requirements?**

Label every vehicle certified under this part with a removable hang-tag showing its emission characteristics relative to other models. The label should be attached securely to the vehicle before it is offered for sale in such a manner that it would not be accidentally removed prior to sale. Use the applicable equations of this section to determine the normalized emission rate (NER) from the FEL for your vehicle. If the vehicle is certified without using the averaging provisions of subpart H, use the final deteriorated emission level. Round the resulting normalized emission rate for your vehicle to one decimal place. If the calculated NER value is less than zero, consider NER to be zero for that vehicle. We may specify a standardized format for labels. At a minimum, the tag should include: the manufacturer's name, vehicle model name, engine description (500 cc two-stroke with DFI), the NER, and a brief explanation of the scale (for example, note that 0 is the cleanest and 10 is the least clean).

(a) For snowmobiles, use the following equation:

$$NER = 16.61 \times \log(2.667 \times HC + CO) - 38.22$$

Where:

HC and CO are the cycle-weighted FELs (or emission rates) for hydrocarbons and carbon monoxide in g/kW-hr.

(b) For off-highway motorcycles, use the following equations:

(1) For off-highway motorcycles certified to the standards in § 1051.105, use one of the equations specified below.

(i) If the vehicle has HC + $NO_X$ emissions less than or equal to 2.0 g/km, use the following equation:

$$NER = 2.500 \times (HC+NO_X)$$

Where:

$HC+NO_X$ is the FEL (or the sum of the cycle-weighted emission rates) for hydrocarbons and oxides of nitrogen in g/km.

(ii) If the vehicle has HC + $NO_X$ emissions greater than 2.0 g/km, use the following equation:

$$NER = 5.000 \times \log(HC+NO_X) + 3.495$$

Where:

$HC+NO_X$ is the FEL (or the sum of the cycle-weighted emission rates) for hydrocarbons and oxides of nitrogen in g/km.

(2) For off-highway motorcycles certified to the standards in § 1051.615(b), use the following equation:

$$NER = 8.782 \times \log(HC+NO_X) - 5.598$$

Where:

$HC+NO_X$ is the FEL (or the sum of the cycle-weighted emission rates) for hydrocarbons and oxides of nitrogen in g/kW-hr.

(c) For ATVs, use the following equations:

(1) For ATVs certified to the standards in § 1051.107, use one of the equations specified below.

(i) If the vehicle has HC + $NO_X$ emissions less than or equal to 1.5 g/km, use the following equation:

$$NER = 3.333 \times (HC+NO_X)$$

Where:

$HC+NO_X$ is the FEL (or the sum of the cycle-weighted emission rates) for hydrocarbons and oxides of nitrogen in g/km.

(ii) If the vehicle has HC + $NO_X$ emissions greater than 1.5 g/km, use the following equation:

$$NER = 4.444 \times \log(HC+NO_X) + 4.217$$

Where:

$HC+NO_X$ is the FEL (or the sum of the cycle-weighted emission rates) for hydrocarbons and oxides of nitrogen in g/km.

(2) For ATVs certified to the standards in § 1051.615(a), use the following equation:

$$NER = 8.782 \times \log(HC + NO_X) - 7.277$$

Where:

$HC+NO_X$ is the FEL (or the sum of the cycle-weighted emission rates) for hydrocarbons and oxides of nitrogen in g/kW-hr.

■ 283. Section 1051.145 is amended by removing and reserving paragraph (c), revising paragraphs (a)(3)(iv), (a)(4), (b)(1) before the table, (b)(3), (e), and (g), and adding paragraphs (a)(3)(v), (a)(3)(vi), and (h) to read as follows:

**§ 1051.145 What provisions apply only for a limited time?**

* * * * *

(a) * * *

(3) * * *

(iv) Show that fewer than 50 percent of the engine family's total sales in the United States are used in recreational vehicles regulated under this part. This includes engines used in any application, without regard to which company manufactures the vehicle or equipment.

(v) If your engines do not meet the criteria listed in paragraph (a) of this section, they will be subject to the provisions of this part. Introducing these engines into commerce without a valid exemption or certificate of conformity violates the prohibitions in 40 CFR 1068.101.

(vi) Engines exempted under this paragraph (a)(3) are subject to all the requirements affecting engines under 40 CFR part 90. The requirements and restrictions of 40 CFR part 90 apply to anyone manufacturing these engines, anyone manufacturing equipment that

uses these engines, and all other persons in the same manner as other engines subject to 40 CFR part 90.

(4) All vehicles produced under this paragraph (a) must be labeled according to our specifications. The label must include the following:

(i) The heading ''EMISSION CONTROL INFORMATION''.

(ii) Your full corporate name and trademark.

(iii) A description of the provisions under which this section applies to your vehicle .

(iv) Other information that we specify to you in writing.

(b) * * *

(1) Follow Table 1 of this section for exhaust emission standards, while meeting all the other requirements of § 1051.107. You may use emission credits to show compliance with these standards (see subpart H of this part). You may not exchange emission credits with engine families meeting the standards in § 1051.107(a). You may also not exchange credits between engine families certified to the standards for engines above 225 cc and engine families certified to the standards for engines below 225 cc. The phase-in percentages in the table specify the percentage of your total U.S.-directed production that must comply with the emission standards for those model years (i.e., the percentage requirement does not apply separately for engine families above and below 225 cc). Table 1 follows:

* * * * *

(3) For ATVs certified to the standards in this paragraph (b), use the following equations to determine the normalized emission rate required by § 1051.137:

(i) For engines at or above 225 cc, use the following equation:

$$NER = 9.898 \times \log (HC + NO_X) - 4.898$$

Where:

$HC + NO_X$ is the sum of the cycle-weighted emission rates for hydrocarbons and oxides of nitrogen in g/kW-hr.

(ii) For engines below 225 cc, use the following equation:

$$NER = 9.898 \times \log [(HC+NO_X)\ 0.83] - 4.898$$

Where:

$HC + NO_X$ is the sum of the cycle-weighted emission rates for hydrocarbons and oxides of nitrogen in g/kW-hr.

* * * * *

(e) *Raw sampling procedures.* Using good engineering judgment, you may use the alternate raw-sampling procedures instead of the procedures described in 40 CFR part 1065 for emission testing certain vehicles, as follows:

(1) *Snowmobile.* You may use the raw sampling procedures described in 40 CFR part 90 or 91 for snowmobiles before the 2010 model year.

(2) *ATV.* You may use the raw sampling procedures described in 40 CFR part 90 or 91 for ATVs certified to the standards in § 1051.615 before the 2011 model year. You may use these raw sampling procedures for ATVs certified to the standards in § 1051.107 or § 1051.145(b) before the 2009 model year.

* * * * *

(g) *Pull-ahead option for permeation emissions.* Manufacturers choosing to comply with an early tank permeation standard of 3.0 g/m²/day prior to model year 2008 may be allowed to delay compliance with the 1.5 g/m²/day standard by earning credits, as follows:

(1) Calculate earned credits using the following equation:

$$Credit = (Baseline\ emissions - Pull\text{-}ahead\ level) \times [\Sigma_i(Production)_i \times (UL)_i]$$

Where:

Baseline emissions = the baseline emission rate, as determined in paragraph (g)(2) of this section.

Pull-ahead level = the permeation level to which you certify the tank, which must be at or below 3.0 g/m²/day.

$(Production)_i$ = the annual production volume of vehicles in the engine family for model year ''i'' times the average internal surface area of the vehicles' fuel tanks.

$(UL)_i$ = The useful life of the engine family in model year ''i''.

(2) Determine the baseline emission level for calculating credits using any of the following values:

(i) 7.6 g/m²/day.

(ii) The emission rate measured from your lowest-emitting, uncontrolled fuel tank from the current or previous model year using the procedures in § 1051.515. For example, this would generally involve the fuel tank with the greatest wall thickness for a given material.

(iii) The emission rate measured from an uncontrolled fuel tank that is the same as or most similar to the model you have used during the current or previous model year. However, you may use this approach only if you use it to establish a baseline emission level for each unique tank model you produce using the procedures in § 1051.515.

(3) Pull-ahead tanks under this option must be certified and must meet all applicable requirements other than those limited to compliance with the exhaust standards.

(4) You may use credits generated under this paragraph (g) as specified in subpart H of this part.

(h) *Deficit credits for permeation standards.* For 2008 through 2010 model years, you may have a negative balance of emission credits relative to the permeation emission standards at the end of each model year, subject to the following provisions:

(1) You must eliminate any credit deficit we allow under this paragraph (h) by the end of the 2011 model year. If you are unable to eliminate your credit deficit by the end of the 2011 model year, we may void the certificates for all families certified to FELs above the allowable average, for all affected model years.

(2) State in your application for certification a statement whether you will have a negative balance of permeation emission credits for that model year. If you project that you will have a negative balance, estimate the credit deficit for each affected model year and present a detailed plan to show where and when you will get credits to offset the deficit by the end of the 2011 model year.

(3) In your end-of-year report under § 1051.730, state whether your credit deficit is larger or smaller than you projected in your application for certification. If the deficit is larger than projected, include in your end-of-year report an update to your detailed plan to show how you will eliminate the credit deficit by the end of the 2011 model year.

■ 284. Section 1051.201 is revised to read as follows:

**§ 1051.201 What are the general requirements for obtaining a certificate of conformity?**

(a) You must send us a separate application for a certificate of conformity for each engine family. A certificate of conformity is valid from the indicated effective date until December 31 of the model year for which it is issued.

(b) The application must contain all the information required by this part and must not include false or incomplete statements or information (see § 1051.255).

(c) We may ask you to include less information than we specify in this subpart, as long as you maintain all the information required by § 1051.250.

(d) You must use good engineering judgment for all decisions related to your application (see 40 CFR 1068.5).

(e) An authorized representative of your company must approve and sign the application.

(f) See § 1051.255 for provisions describing how we will process your application.

(g) We may require you to deliver your test vehicles or engines to a facility we designate for our testing (see § 1051.235(c)).

■ 285. Section 1051.205 is revised to read as follows:

**§ 1051.205 What must I include in my application?**

This section specifies the information that must be in your application, unless we ask you to include less information under § 1051.201(c). We may require you to provide additional information to evaluate your application.

(a) Describe the engine family's specifications and other basic parameters of the vehicle's design and emission controls. List the fuel type on which your engines are designed to operate (for example, gasoline, liquefied petroleum gas, methanol, or natural gas). List vehicle configurations and model names that are included in the engine family.

(b) Explain how the emission-control system operates. Describe the evaporative emission controls. Also describe in detail all system components for controlling exhaust emissions, including all auxiliary-emission control devices (AECDs) and all fuel-system components you will install on any production or test vehicle or engine. Identify the part number of each component you describe. For this paragraph (b), treat as separate AECDs any devices that modulate or activate differently from each other. Include all the following:

(1) Give a general overview of the engine, the emission-control strategies, and all AECDs.

(2) Describe each AECD's general purpose and function.

(3) Identify the parameters that each AECD senses (including measuring, estimating, calculating, or empirically deriving the values). Include vehicle-based parameters and state whether you simulate them during testing with the applicable procedures.

(4) Describe the purpose for sensing each parameter.

(5) Identify the location of each sensor the AECD uses.

(6) Identify the threshold values for the sensed parameters that activate the AECD.

(7) Describe the parameters that the AECD modulates (controls) in response to any sensed parameters, including the range of modulation for each parameter, the relationship between the sensed parameters and the controlled parameters and how the modulation achieves the AECD's stated purpose. Use graphs and tables, as necessary.

(8) Describe each AECD's specific calibration details. This may be in the form of data tables, graphical representations, or some other description.

(9) Describe the hierarchy among the AECDs when multiple AECDs sense or modulate the same parameter. Describe whether the strategies interact in a comparative or additive manner and identify which AECD takes precedence in responding, if applicable.

(10) Explain the extent to which the AECD is included in the applicable test procedures specified in subpart F of this part.

(11) Do the following additional things for AECDs designed to protect engines or vehicles:

(i) Identify the engine and/or vehicle design limits that make protection necessary and describe any damage that would occur without the AECD.

(ii) Describe how each sensed parameter relates to the protected components' design limits or those operating conditions that cause the need for protection.

(iii) Describe the relationship between the design limits/parameters being protected and the parameters sensed or calculated as surrogates for those design limits/parameters, if applicable.

(iv) Describe how the modulation by the AECD prevents engines and/or equipment from exceeding design limits.

(v) Explain why it is necessary to estimate any parameters instead of measuring them directly and describe how the AECD calculates the estimated value, if applicable.

(vi) Describe how you calibrate the AECD modulation to activate only during conditions related to the stated need to protect components and only as needed to sufficiently protect those components in a way that minimizes the emissionimpact.

(c) [Reserved]

(d) Describe the vehicles or engines you selected for testing and the reasons for selecting them.

(e) Describe the test equipment and procedures that you used, including any special or alternate test procedures you used (see § 1051.501).

(f) Describe how you operated the emission-data vehicle before testing, including the duty cycle and the extent of engine operation used to stabilize emission levels. Explain why you selected the method of service accumulation. Describe any scheduled maintenance you did.

(g) List the specifications of the test fuel to show that it falls within the required ranges we specify in 40 CFR part 1065.

(h) Identify the engine family's useful life.

(i) Include the maintenance instructions you will give to the ultimate purchaser of each new vehicle (see § 1051.125).

(j) Include the emission-related installation instructions you will provide if someone else installs your engines in a vehicle (see § 1051.130).

(k) Describe the labels you create to meet the requirements of § 1051.135.

(l) Identify the exhaust emission standards or FELs to which you are certifying engines in the engine family.

(m) Identify the engine family's deterioration factors and describe how you developed them (see § 1051.243 and § 1051.245). Present any emission test data you used for this.

(n) State that you operated your emission-data vehicles as described in the application (including the test procedures, test parameters, and test fuels) to show you meet the requirements of this part.

(o) Present emission data to show that you meet emission standards, as follows:

(1) Present emission data for hydrocarbons (such as NMHC or THCE, as applicable), $NO_X$, and CO on an emission-data vehicle to show your vehicles meet the applicable exhaust emission standards we specify in subpart B of this part. Show emission figures before and after applying deterioration factors for each pollutant and for each vehicle or engine. If we specify more than one grade of any fuel type (for example, a summer grade and winter grade of gasoline), you need to submit test data only for one grade, unless the regulations of this part specify otherwise for your engine.

(2) Present evaporative test data for hydrocarbons to show your vehicles meet the evaporative emission standards we specify in subpart B of this part. Show emission figures before and after applying deterioration factors for each vehicle or engine, where applicable. If you did not perform the testing, identify the source of the test data.

(3) Note that § 1051.235 and § 1051.245 allow you to submit an application in certain cases without new emission data.

(p) Report all test results, including those from invalid tests or from any other tests, whether or not they were conducted according to the test procedures of subpart F of this part. If you measure $CO_2$, report those emission levels. We may ask you to send other information to confirm that your tests

were valid under the requirements of this part and 40 CFR part 1065.

(q) Describe all adjustable operating parameters (see § 1051.115(e)), including production tolerances. Include the following in your description of each parameter:

(1) The nominal or recommended setting.

(2) The intended physically adjustable range.

(3) The limits or stops used to establish adjustable ranges.

(4) Information showing why the limits, stops, or other means of inhibiting adjustment are effective in preventing adjustment of parameters on in-use engines to settings outside your intended physically adjustable ranges.

(r) Confirm that your emission-related installation instructions specify how to ensure that sampling of exhaust emissions will be possible after engines are installed in equipment and placed in service. If this cannot be done by simply adding a 20-centimeter extension to the exhaust pipe, show how to sample exhaust emissions in a way that prevents diluting the exhaust sample with ambient air.

(s) Unconditionally certify that all the vehicles and/or engines in the engine family comply with the requirements of this part, other referenced parts of the CFR, and the Clean Air Act.

(t) Include estimates of U.S.-directed production volumes.

(u) Include the information required by other subparts of this part. For example, include the information required by § 1051.725 if you participate in the ABT program.

(v) Include other applicable information, such as information specified in this part or 40 CFR part 1068 related to requests for exemptions.

(w) Name an agent for service of process located in the United States. Service on this agent constitutes service on you or any of your officers or employees for any action by EPA or otherwise by the United States related to the requirements of this part.

■ 286. Section 1051.210 is revised to read as follows:

**§ 1051.210 May I get preliminary approval before I complete my application?**

If you send us information before you finish the application, we will review it and make any appropriate determinations, especially for questions related to engine family definitions, auxiliary emission-control devices, deterioration factors, testing for service accumulation, and maintenance. Decisions made under this section are considered to be preliminary approval, subject to final review and approval. We will generally not reverse a decision where we have given you preliminary approval, unless we find newinformation supporting a different decision. If you request preliminary approval related to the upcoming model year or the model year after that, we will make best-efforts to make the appropriate determinations as soon as practicable. We will generally not provide preliminary approval related to a future model year more than two years ahead of time.

**§ 1051.215 [Removed]**

■ 287. Section 1051.215 is removed.

■ 288. Section 1051.220 is revised to read as follows:

**§ 1051.220 How do I amend the maintenance instructions in my application?**

You may amend your emission-related maintenance instructions after you submit your application for certification, as long as the amended instructions remain consistent with the provisions of § 1051.125. You must send the Designated Compliance Officer a request to amend your application for certification for an engine family if you want to change the emission-related maintenance instructions in a way that could affect emissions. In your request, describe the proposed changes to the maintenance instructions. We will disapprove your request if we determine that the amended instructions are inconsistent with maintenance you performed on emission-data vehicles.

(a) If you are decreasing the specified maintenance, you may distribute the new maintenance instructions to your customers 30 days after we receive your request, unless we disapprove your request. We may approve a shorter time or waive this requirement.

(b) If your requested change would not decrease the specified maintenance, you may distribute the new maintenance instructions anytime after you send your request. For example, this paragraph (b) would cover adding instructions to increase the frequency of a maintenance step for engines in severe-duty applications.

(c) You need not request approval if you are making only minor corrections (such as correcting typographical mistakes), clarifying your maintenance instructions, or changing instructions for maintenance unrelated to emission control.

■ 289. Section 1051.225 is revised to read as follows:

**§ 1051.225 How do I amend my application for certification to include new or modified vehicles or to change an FEL?**

Before we issue you a certificate of conformity, you may amend your application to include new or modified vehicle configurations, subject to the provisions of this section. After we have issued your certificate of conformity, you may send us an amended application requesting that we include new or modified vehicle configurations within the scope of the certificate, subject to the provisions of this section. You must amend your application if any changes occur with respect to any information included in your application.

(a) You must amend your application before you take any of the following actions:

(1) Add a vehicle (that is, an additional vehicle configuration) to an engine family. In this case, the vehicle added must be consistent with other vehicles in the engine family with respect to the criteria listed in § 1051.230.

(2) Change a vehicle already included in an engine family in a way that may affect emissions, or change any of the components you described in your application for certification. This includes production and design changes that may affect emissions any time during the engine's lifetime.

(3) Modify an FEL for an engine family, as described in paragraph (f) of this section.

(b) To amend your application for certification, send the Designated Compliance Officer the following information:

(1) Describe in detail the addition or change in the vehicle model or configuration you intend to make.

(2) Include engineering evaluations or data showing that the amended engine family complies with all applicable requirements. You may do this by showing that the original emission-data vehicle is still appropriate with respect to showing compliance of the amended family with all applicable requirements.

(3) If the original emission-data vehicle for the engine family is not appropriate to show compliance for the new or modified vehicle, include new test data showing that the new or modified vehicle meets the requirements of this part.

(c) We may ask for more test data or engineering evaluations. You must give us these within 30 days after we request them.

(d) For engine families already covered by a certificate of conformity, we will determine whether the existing certificate of conformity covers your

new or modified vehicle. You may ask for a hearing if we deny your request (see § 1051.820).

(e) For engine families already covered by a certificate of conformity, you may start producing the new or modified vehicle anytime after you send us your amended application, before we make a decision under paragraph (d) of this section. However, if we determine that the affected vehicles do not meet applicable requirements, we will notify you to cease production of the vehicles and may require you to recall the vehicles at no expense to the owner. Choosing to produce vehicles under this paragraph (e) is deemed to be consent to recall all vehicles that we determine do not meet applicable emission standards or other requirements and to remedy the nonconformity at no expense to the owner. If you do not provide information required under paragraph (c) of this section within 30 days, you must stop producing the new or modified vehicles.

(f) You may ask to change your FEL in the following cases:

(1) You may ask to raise your FEL for your engine family after the start of production. You must use the higher FEL for the entire family to calculate your average emission level under subpart H of this part. In your request, you must demonstrate that you will still be able to comply with the applicable average emission standards as specified in subparts B and H of this part.

(2) You may ask to lower the FEL for your engine family after the start of production only when you have test data from production vehicles indicating that your vehicles comply with the lower FEL. You may create a separate subfamily with the lower FEL. Otherwise, you must use the higher FEL for the family to calculate your average emission level under subpart H of this part.

(3) If you change the FEL during production, you must include the new FEL on the emission control information label for all vehicles produced after the change.

■ 290. Section 1051.230 is revised to read as follows:

### § 1051.230 How do I select engine families?

(a) Divide your product line into families of vehicles that are expected to have similar emission characteristics throughout the useful life. Except as specified in paragraph (f) of this section, you must have separate engine families for meeting exhaust and evaporative emissions. Your engine family is limited to a single model year.

(b) For exhaust emissions, group vehicles in the same engine family if they are the samein all the following aspects:

(1) The combustion cycle.

(2) The cooling system (liquid-cooled vs. air-cooled).

(3) Configuration of the fuel system (for example, port fuel injection vs. carburetion).

(4) Method of air aspiration.

(5) The number, location, volume, and composition of catalytic converters.

(6) Type of fuel.

(7) The number, arrangement, and approximate bore diameter of cylinders.

(8) Numerical level of the emission standards that apply to the vehicle.

(c) For evaporative emissions, group vehicles in the same engine family if fuel tanks are similar and fuel lines are similar considering all the following aspects:

(1) Type of material (including additives such as pigments, plasticizers, and UV inhibitors).

(2) Emission-control strategy.

(3) Production methods. This does not apply to differences in production methods that would not affect emission characteristics.

(d) You may subdivide a group of vehicles that is identical under paragraph (b) or (c) of this section into different engine families if you show the expected emission characteristics are different during the useful life.

(e) You may group vehicles that are not identical with respect to the things listed in paragraph (b) or (c) of this section in the same engine family, as follows:

(1) You may group such vehicles in the same engine family if you show that their emission characteristics during the useful life will be similar.

(2) If you are a small-volume manufacturer, you may group engines from any vehicles subject to the same emission standards into a single engine family. This does not change any of the requirements of this part for showing that an engine family meets emission standards.

(f) You may divide your product line into engine families based on a combined consideration of exhaust and evaporative emission-control systems, consistent with the requirements of this section. This would allow you to use a single engine-family designation for each engine family instead of having separate engine-family designations for exhaust and evaporative emission-control systems for each model.

(g) Select test engines from the engine family as described in 40 CFR 1065.401. Select test components related to evaporative emission-control systems that are most likely to exceed the applicable emission standards. For example, select a fuel tank with the smallest average wall thickness (or barrier thickness, as appropriate) of those tanks you include in the same family.

■ 291. Section 1051.235 is revised to read as follows:

### § 1051.235 What emission testing must I perform for my application for a certificate of conformity?

This section describes the emission testing you must perform to show compliance with the emission standards in subpart B of this part.

(a) Test your emission-data vehicles using the procedures and equipment specified in subpart F of this part. Where specifically required or allowed, test the engine instead of the vehicle. For evaporative emissions, test the fuel system components separate from the vehicle.

(b) Select from each engine family an emission-data vehicle, and a fuel system for each fuel type with a configuration that is most likely to exceed the emission standards, using good engineering judgment. Consider the emission levels of all exhaust constituents over the full useful life of the vehicle.

(c) We may measure emissions from any of your test vehicles or engines (or any other vehicles or engines from the engine family), as follows:

(1) We may decide to do the testing at your plant or any other facility. If we do this, you must deliver the test vehicle or engine to a test facility we designate. The test vehicle or engine you provide must include appropriate manifolds, aftertreatment devices, electronic control units, and other emission-related components not normally attached directly to the engine block. If we do the testing at your plant, you must schedule it as soon as possible and make available the instruments, personnel, and equipment we need.

(2) If we measure emissions on one of your test vehicles or engines, the results of thattesting become the official emission results. Unless we later invalidate these data, we may decide not to consider your data in determining if your engine family meets applicable requirements.

(3) Before we test one of your vehicles or engines, we may set its adjustable parameters to any point within the physically adjustable ranges (see § 1051.115(c)).

(4) Before we test one of your vehicles or engines, we may calibrate it within normal production tolerances for

anything we do not consider an adjustable parameter.

(d) You may use previously generated emission data in the following cases:

(1) You may ask to use emission data from a previous model year instead of doing new tests, but only if all the following are true:

(i) The engine family from the previous model year differs from the current engine family only with respect to model year.

(ii) The emission-data vehicle from the previous model year remains the appropriate emission-data vehicle under paragraph (b) of this section.

(iii) The data show that the emission-data vehicle would meet all the requirementsthat apply to the engine family covered by the application for certification.

(2) You may submit emission data for equivalent engine families performed to show compliance with other standards (such as California standards) instead of doing newtests, but only if the data show that the test vehicle or engine would meet all of this part's requirements.

(3) You may submit evaporative emission data measured by a fuel system supplier.We may require you to verify that the testing was conducted in accordance with the applicable regulations.

(e) We may require you to test a second vehicle or engine of the same or different configuration in addition to the vehicle or engine tested under paragraph (b) of this section.

(f) If you use an alternate test procedure under 40 CFR 1065.10 and later testing showsthat such testing does not produce results that are equivalent to the procedures specifiedin subpart F of this part, we may reject data you generated using the alternate procedure.

(g) If you are a small-volume manufacturer, you may certify by design on the basis of preexisting exhaust emission data for similar technologies and other relevant information, and in accordance with good engineering judgment. In those cases, you are not requiredto test your vehicles. This is called ''design-certification'' or ''certifying by design.'' To certify by design, you must show that the technology used on your engines is sufficiently similar to the previously tested technology that a person reasonably familiar with emission-control technology would believe that your engines will comply with the emission standards.

(h) For fuel tanks that are certified based on permeability treatments for plastic fueltanks, you do not need to test each engine family. However, you must use good engineering judgment to determine permeation rates for the tanks. This requires that more than one fuel tank be tested for each set of treatment conditions. You may not usetest data from a given tank for any other tanks that have thinner walls. You may, however, use test data from a given tank for other tanks that have thicker walls. This applies to both low-hour (i.e., baseline testing) and durability testing. Note that § 1051.245 allows you to use design-based certification instead of generating new emission data.

■ 292. Section 1051.240 is revised to read as follows:

**§ 1051.240 How do I demonstrate that my engine family complies with exhaust emission standards?**

(a) For purposes of certification, your engine family is considered in compliance with the applicable numerical exhaust emission standards in subpart B of this part if all emission-data vehicles representing that family have test results showing deteriorated emission levels at or below these standards. (Note: if you participate in the ABT program in subpart H of this part, your FELs are considered to be the applicable emission standards with which you must comply.)

(b) Your engine family is deemed not to comply if any emission-data vehicle representing that family has test results showing a deteriorated emission level above an applicable FEL or emission standard from subpart B of this part for any pollutant.

(c) To compare emission levels from the emission-data vehicle with the applicable emission standards, apply deterioration factors to the measured emission levels. Section 1051.243 specifies how to test your vehicle to develop deterioration factors that representthe deterioration expected in emissions over your vehicle's full useful life. Your deterioration factors must take into account any available data from in-use testing with similar engines. Small-volume manufacturers may use assigned deterioration factors that we establish. Apply deterioration factors as follows:

(1) For vehicles that use aftertreatment technology, such as catalytic converters, use a multiplicative deterioration factor for exhaust emissions. A multiplicative deterioration factor for a pollutant is the ratio of exhaust emissions at the end of the useful life and exhaust emissions at the low-hour test point. In these cases, adjust the official emission results for each tested vehicle or engine at the selected test point by multiplying the measured emissions by the deterioration factor. If the factor is lessthan one, use one. Multiplicative deterioration factors must be specified to three significant figures.

(2) For vehicles that do not use aftertreatment technology, use an additive deterioration factor for exhaust emissions. An additive deterioration factor for a pollutant is the difference between exhaust emissions at the end of the useful life and exhaust emissions at the low-hour test point. In these cases, adjust the official emission results for each tested vehicle or engine at the selected test point by addingthe factor to the measured emissions. If the factor is less than zero, use zero.Additive deterioration factors must be specified to one more decimal place than the applicable standard.

(d) Collect emission data using measurements to one more decimal place than the applicable standard. Apply the deterioration factor to the official emission result, as described in paragraph (c) of this section, then round the adjusted figure to the same number of decimal places as the emission standard. Compare the rounded emission levels to the emission standard for each emission-data vehicle. In the case of $HC+NO_X$ standards, add the emission results and apply the deterioration factor to the sum of the pollutants before rounding. However, if your deterioration factors are based on emission measurements that do not cover the vehicle's full useful life, apply the deterioration factor to each pollutant and then add the results before rounding.

■ 293. A new § 1051.243 is added to read as follows:

**§ 1051.243 How do I determine deterioration factors from exhaust durability testing?**

Establish deterioration factors to determine whether your engines will meet emission standards for each pollutant throughout the useful life, as described in subpart B of this part and § 1051.240. This section describes how to determine deterioration factors, either with pre-existing test data or with new emission measurements.

(a) You may ask us to approve deterioration factors for an engine family based on emission measurements from similar vehicles or engines if you have already given usthese data for certifying other vehicles in the same or earlier model years. Use good engineering judgment to decide whether the two vehicles or engines are similar. We will approve your request if you show us that the emission measurements from other vehicles or engines reasonably represent in-use deterioration for the engine family for

which you have not yet determined deterioration factors.

(b) If you are unable to determine deterioration factors for an engine family under paragraph (a) of this section, select vehicles, engines, subsystems, or components for testing. Determine deterioration factors based on service accumulation and related testingto represent the deterioration expected from in-use vehicles over the full useful life, as follows:

(1) You must measure emissions from the emission-data vehicle at a low-hour test point and the end of the useful life. You may also test at evenly spaced intermediate points.

(2) Operate the vehicle or engine over a representative duty cycle for a period at least as long as the useful life (in hours or kilometers). You may operate the vehicle or engine continuously.

(3) You may perform maintenance on emission-data vehicles as described in § 1051.125 and 40 CFR part 1065, subpart E.

(4) If you measure emissions at only two points to calculate your deterioration factor, base your calculations on a linear relationship connecting these two data points for each pollutant. If you measure emissions at three or more points, use a linear least-squares fit of your test data for each pollutant to calculate your deterioration factor.

(5) Use good engineering judgment for all aspects of the effort to establish deterioration factors under this paragraph (b).

(6) You may to use other testing methods to determine deterioration factors, consistent with good engineering judgment.

(c) Include the following information in your application for certification:

(1) If you use test data from a different engine family, explain why this is appropriate and include all the emission measurements on which you base the deterioration factor.

(2) If you do testing to determine deterioration factors, describe the form and extent of service accumulation, including a rationale for selecting the service-accumulation period and the method you use to accumulate hours.

■ 294. Section 1051.245 is amended by revising paragraphs (a) introductory text, (b), (c), and (d) to read as follows:

**§ 1051.245 How do I demonstrate that my engine family complies with evaporative emission standards?**

(a) For purposes of certification, your engine family is considered in compliance with the evaporative emission standards in subpart B of this part if you do either of the following:

* * * * *

(b) Your engine family is deemed not to comply if any fuel tank or fuel line representingthat family has test results showing a deteriorated emission level above the standard.

(c) To compare emission levels with the emission standards, apply deterioration factorsto the measured emission levels. For permeation emissions, use the following proceduresto establish an additive deterioration factor, as described in § 1051.240(c)(2):

(1) Section 1051.515 specifies how to test your fuel tanks to develop deterioration factors. Small-volume manufacturers may use assigned deterioration factors that we establish. Apply the deterioration factors as follows:

(i) Calculate the deterioration factor from emission tests performed before and after the durability tests as described in § 1051.515(c) and (d), using good engineering judgment. The durability tests described in § 1051.515(d) representthe minimum requirements for determining a deterioration factor. You may not use a deterioration factor that is less than the difference between evaporative emissions before and after the durability tests as described in § 1051.515(c) and(d).

(ii) Do not apply the deterioration factor to test results for tanks that have already undergone these durability tests.

(2) Determine the deterioration factor for fuel lines using good engineering judgment.

(d) Collect emission data using measurements to one more decimal place than the applicable standard. Apply the deterioration factor to the official emission result, as described in paragraph (c) of this section, then round the adjusted figure to the same number of decimal places as the emission standard. Compare the rounded emission levels to the emission standard for each emission-data vehicle.

* * * * *

■ 295. Section 1051.250 is revised to read as follows:

**§ 1051.250 What records must I keep and make available to EPA?**

(a) Organize and maintain the following records:

(1) A copy of all applications and any summary information you send us.

(2) Any of the information we specify in § 1051.205 that you were not required to include in your application.

(3) A detailed history of each emission-data vehicle. For each vehicle, describe all of the following:

(i) The emission-data vehicle's construction, including its origin and buildup, steps you took to ensure that it represents production vehicles, any components you built specially for it, and all the components you include in your application for certification.

(ii) How you accumulated vehicle or engine operating hours, including the dates and the number of hours accumulated.

(iii) All maintenance, including modifications, parts changes, and other service, and the dates and reasons for the maintenance.

(iv) All your emission tests, including documentation on routine and standardtests, as specified in 40 CFR part 1065, and the date and purpose of each test.

(v) All tests to diagnose engine or emission-control performance, giving the date and time of each and the reasons for the test.

(vi) Any other significant events.

(4) Production figures for each engine family divided by assembly plant.

(5) Keep a list of engine identification numbers for all the engines you produce under each certificate of conformity.

(b) Keep data from routine emission tests (such as test cell temperatures and relative humidity readings) for one year after we issue the associated certificate of conformity.Keep all other information specified in paragraph (a) of this section for eight years after we issue your certificate.

(c) Store these records in any format and on any media, as long as you can promptly send us organized, written records in English if we ask for them. You must keep these records readily available. We may review them at any time.

(d) Send us copies of any maintenance instructions or explanations if we ask for them.

■ 296. Section 1051.255 is revised to read as follows:

**§ 1051.255 What decisions may EPA make regarding my certificate of conformity?**

(a) If we determine your application is complete and shows that the engine family meets all the requirements of this part and the Act, we will issue a certificate of conformity for your engine family for that model year. We may make the approval subject to additional conditions.

(b) We may deny your application for certification if we determine that your engine family fails to comply with emission standards or other requirements of this part or the Act. Our

decision may be based on a review of all information available to us. If we deny your application, we will explain why in writing.

(c) In addition, we may deny your application or suspend or revoke your certificate if you do any of the following:

(1) Refuse to comply with any testing or reporting requirements.

(2) Submit false or incomplete information (paragraph (e) of this section applies if this is fraudulent).

(3) Render inaccurate any test data.

(4) Deny us from completing authorized activities despite our presenting a warrant or court order (see 40 CFR 1068.20). This includes a failure to provide reasonable assistance.

(5) Produce engines for importation into the United States at a location where local law prohibits us from carrying out authorized activities.

(6) Fail to supply requested information or amend your application to include all engines being produced.

(7) Take any action that otherwise circumvents the intent of the Act or this part.

(d) We may void your certificate if you do not keep the records we require or do not give us information as required under this part or the Act.

(e) We may void your certificate if we find that you intentionally submitted false orincomplete information.

(f) If we deny your application or suspend, revoke, or void your certificate, you may ask for a hearing (see § 1051.820).

■ 297. The heading for subpart D is revised to read as follows:

## Subpart D—Testing Production-Line Vehicles and Engines

■ 298. Section 1051.301 is amended by revising paragraph (a) and adding paragraph (h) to read as follows:

### § 1051.301 When must I test my production-line vehicles or engines

(a) If you produce vehicles that are subject to the requirements of this part, you must test them as described in this subpart. If your vehicle is certified to g/kW-hr standards, then test the engine; otherwise, test the vehicle. The provisions of this subpart do not apply to small-volume manufacturers.

* * * * *

(h) Vehicles certified to the following standards are exempt from the production-line testing requirements of this subpart if no engine families in the averaging set participate in the averaging, banking, and trading program described in subpart H of this part:

(1) Phase I or Phase 2 standards in § 1051.103

(2) Phase I standards in § 1051.105

(3) Phase I standards in § 1051.107.

(4) The standards in § 1051.615.

(5) The standards in § 1051.145.

■ 299. Section 1051.305 is amended by revising paragraphs (d)(1), (e), (f), and (g) to read as follows:

### § 1051.305 How must I prepare and test my production-line vehicles or engines

* * * * *

(d) * * *

(1) We may adjust or require you to adjust idle speed outside the physically adjustable range as needed only until the vehicle or engine has stabilized emission levels (see paragraph (e) of this section). We may ask you for information needed to establish an alternate minimum idle speed.

* * * * *

(e) *Stabilizing emission levels.* Before you test production-line vehicles or engines, you may operate the vehicle or engine to stabilize the emission levels. Using good engineering judgment, operate your vehicles or engines in a way that represents the way they will be used. You may operate each vehicle or engine for no more than the greater of two periods:

(1) 50 hours or 500 kilometers.

(2) The number of hours or kilometers you operated the emission-data vehicle used for certifying the engine family (see 40 CFR part 1065, subpart E, or the applicable regulations governing how you should prepare your test vehicle or engine).

(f) *Damage during shipment.* If shipping a vehicle or engine to a remote facility for production-line testing makes necessary an adjustment or repair, you must wait until after the initial emission test to do this work. We may waive this requirement if the test would be impossible or unsafe, or if it would permanently damage the vehicle or engine. Report to us, in your written report under § 1051.345, all adjustments or repairs you make on test vehicles or engines before each test.

(g) *Retesting after invalid tests.* You may retest a vehicle or engine if you determine an emission test is invalid under subpart F of this part. Explain in your written report reasons for invalidating any test and the emission results from all tests. If you retest a vehicle or engine, you may ask us within ten days of testing. We will generally answer within ten days after we receive your information.

■ 300. Section 1051.310 is amended by revising paragraphs (c) introductory test, (c)(2), (f), (g), and (i) to read as follows:

### § 1051.310 How must I select vehicles or engines for production-line testing

* * * * *

(c) Calculate the required sample size for each engine family. Separately calculate this figure for HC, $NO_X$ (or $HC+NO_X$), and CO (and other regulated pollutants). The required sample size is the greater of these calculated values. Use the following equation:

$$N = \left[\frac{(t_{95} \times \sigma)}{(x - STD)}\right]^2 + 1$$

Where:

N = Required sample size for the model year.

$t_{95}$ = 95% confidence coefficient, which depends on the number of tests completed, n, as specified in the table in paragraph (c)(1) of this section. It defines 95% confidence intervals for a one-tail distribution.

x = Mean of emission test results of the sample.

STD = Emission standard (or family emission limit, if applicable).

σ = Test sample standard deviation (see paragraph (c)(2) of this section).

n = The number of tests completed in an engine family.

* * * * *

(2) Calculate the standard deviation, σ, or the test sample using the following formula:

$$\sigma = \sqrt{\frac{\sum (X_i - x)^2}{n - 1}}$$

Where:

$X_i$ = Emission test result for an individual vehicle or engine.

* * * * *

(f) Distribute the remaining vehicle or engine tests evenly throughout the rest of the year. You may need to adjust your schedule for selecting vehicles or engines if the required sample size changes. Continue to randomly select vehicles or engines from each engine family.

(g) Continue testing any engine family for which the sample mean, x, is greater than the emission standard. This applies if the sample mean for either HC, $NO_X$ (or $HC+NO_X$) or CO (or other regulated pollutants) is greater than the emission standard. Continue testing until one of the following things happens:

(1) The number of tests completed in an engine family, n, is greater than the required sample size, N, and the sample mean, x, is less than or equal to the emission standard. For example, If N = 3.1 after the third test, the sample-size calculation does not allow you to stop testing.

(2) The engine family does not comply according to § 1051.315.

(3) You test 30 vehicles or engines from the engine family.

(4) You test one percent of your projected annual U.S.-directed production volume for the engine family, rounded to the nearest whole number.

(5) You choose to declare that the engine family fails the requirements of this subpart.

* * * * *

(i) You may elect to test more randomly chosen vehicles or engines than we require under this section. Include these vehicles or engines in the sample-size calculations.

■ 301. Section 1051.315 is amended by revising the introductory text to read as follows:

**§ 1051.315 How do I know when my engine family fails the production-line testing requirements**

This section describes the pass-fail criteria for the production-line testing requirements. We apply these criteria on an engine family basis. See§ 1051.320 for the requirements that apply to individual vehicles or engines that fail a production-line test.

* * * * *

■ 302. Section 1051.325 is amended by revising paragraph (d) to read as follows:

**§ 1051.325 What happens if an engine family fails the production-line requirements?**

* * * * *

(d) Section 1051.335 specifies steps you must take to remedy the cause of the engine family's production-line failure. All the vehicles you have produced since the end of the last test period are presumed noncompliant and should be addressed in your proposed remedy. We may require you to apply the remedy to engines produced earlier if we determine that the cause of the failure is likely to have affected the earlier engines.

* * * * *

■ 303. Section 1051.345 is amended by revising paragraphs (a) introductory text, (a)(5),(a)(10), and (d) to read as follows:

**§ 1051.345 What production-line testing records must I send to EPA?**

* * * * *

(a) Within 30 calendar days of the end of each test period, send us a report with the following information:

* * * * *

(5) Identify how you accumulated hours of operation on the vehicles or engines and describe the procedure and schedule you used.

* * * * *

(10) State the date the test period ended for each engine family.

* * * * *

(d) Send electronic reports of production-line testing to the Designated ComplianceOfficer using an approved information format. If you want to use a different format, send us a written request with justification for a waiver.

* * * * *

■ 304. Section 1051.350 is amended by revising paragraph (a) to read as follows:

**§ 1051.350 What records must I keep?**

(a) Organize and maintain your records as described in this section. We may review your records at any time.

* * * * *

■ 305. Section 1051.501 is amended by revising the introductory text and paragraphs (a), (b), (c)(2), and (d) and adding paragraph (e)(3) to read as follows:

**§ 1051.501 What procedures must I use to test my vehicles or engines?**

This section describes test procedures that you use to determine whether vehicles meet the emission standards of this part. See § 1051.235 to determine when testing is required for certification. See subpart D of this part for the production-line testing requirements.

(a) *Snowmobiles.* For snowmobiles, use the equipment and procedures for spark-ignition engines in 40 CFR part 1065 to determine whether your snowmobiles meet the duty-cycle emission standards in § 1051.103. Measure the emissions of all the pollutants we regulate in § 1051.103. Use the duty cycle specified in § 1051.505.

(b) *Motorcycles and ATVs.* For motorcycles and ATVs, use the equipment, procedures, and duty cycle in 40 CFR part 86, subpart F, to determine whether your vehicles meet the exhaust emission standards in § 1051.105 or § 1051.107. Measure the emissions of all the pollutants we regulate in § 1051.105 or § 1051.107. If we allow you to certify ATVs based on engine testing, use the equipment, procedures, and duty cycle described or referencedin the section that allows engine testing. For motorcycles with engine displacement at or below 169 cc and all ATVs, use the driving schedule in paragraph (c) of Appendix I to 40CFR part 86. For all other motorcycles, use the driving schedule in paragraph (b) of Appendix I to part 86. With respect to vehicle-speed governors, test motorcycles andATVs in their ungoverned configuration, unless we approve in advance testing in a governed configuration. We will only approve testing in a governed configuration if you can show that the governor is permanently installed on all production vehicles and is unlikely to be removed in use. With respect to engine-speed governors, test motorcycles and ATVs in their governed configuration. Run the test engine, with all emission-control systems operating, long enough to stabilize emission levels; you may consider emission levels stable without measurement if you accumulate 12 hours of operation.

(c) * * *

(2) Prior to permeation testing of fuel hose, the hose must be preconditioned by filling the hose with the fuel specified in paragraph (d)(3) of this section, sealing the openings, and soaking the hose for 4 weeks at 23±5 °C. To measure fuel-line permeation emissions, use the equipment and procedures specified in SAE J30 (incorporated by reference in § 1051.810). The measurements must be performed at 23±2 °C using the fuel specified in paragraph (d)(3) of this section.

(d) *Fuels.* Use the fuels meeting the following specifications:

(1) *Exhaust.* Use the fuels and lubricants specified in 40 CFR part 1065, subpart H, for all the exhaust testing we require in this part. For service accumulation, use the test fuel or any commercially available fuel that is representative of the fuel that in-use engines will use.

(2) *Fuel Tank Permeation.* (i) For the preconditioning soak described in § 1051.515(a)(1) and fuel slosh durability test described in § 1051.515(d)(3), usethe fuel specified in Table 1 of 40 CFR 1065.710 blended with 10 percent ethanol by volume. As an alternative, you may use Fuel CE10, which is Fuel C as specified in ASTM D 471–98 (incorporated by reference in § 1051.810) blended with 10 percent ethanol by volume.

(ii) For the permeation measurement test in § 1051.515(b), use the fuel specified in Table 1 of 40 CFR 1065.710. As an alternative, you may use the fuel specified in paragraph (d)(2)(i) of this section.

(3) *Fuel Hose Permeation.* Use the fuel specified in Table 1 of 40 CFR 1065.710 blended with 10 percent ethanol by volume for permeation testing of fuel lines. As an alternative, you may use Fuel CE10, which is Fuel C as specified in ASTM D 471–98(incorporated by reference in § 1051.810) blended with 10 percent ethanol by volume.

(e) * * *

(3) You may test engines using a test speed based on the point of maximum power if that represents in-use operation

better than testing based on maximum test speed.

* * * * *

■ 306. Section 1051.505 is amended by revising paragraphs (a), (b)(3), (d), (e), (f)introductory text, (f)(5), and (f)(6) to read as follows:

**§ 1051.505 What special provisions apply for testing snowmobiles?**

Use the following special provisions for testing snowmobiles:

(a) You may perform steady-state testing with either discrete-mode or ramped-modal cycles. You must use the type of testing you select in your application for certification for all testing you perform for that engine family. If we test your engines to confirm thatthey meet emission standards, we will do testing the same way. We may also perform other testing as allowed by the Clean Air Act. Measure steady-state emissions as follows:

(1) For discrete-mode testing, sample emissions separately for each mode, then calculate an average emission level for the whole cycle using the weighting factors specified for each mode. In each mode, operate the engine for at least 5 minutes, then sample emissions for at least 1 minute. Calculate cycle statistics for the sequence of modes and compare with the specified values in 40 CFR 1065.514 to confirm that the test is valid.

(2) For ramped-modal testing, start sampling at the beginning of the first mode and continue sampling until the end of the last mode. Calculate emissions and cycle statistics the same as for transient testing.

(3) Measure emissions by testing the engine on a dynamometer with one or more of the following sets of duty cycles to determine whether it meets the steady-state emission standards in § 1051.103:

(i) The following duty cycle applies for discrete-mode testing:

TABLE 1 OF § 1051.505.—5-MODE DUTY CYCLE FOR SNOWMOBILES

| Mode No. | Speed (percent) [1] | Torque (percent) [2] | Minimum time in mode (minutes) | Weighting factors |
|---|---|---|---|---|
| 1 | 100 | 100 | 3.0 | 0.12 |
| 2 | 85 | 51 | 3.0 | 0.27 |
| 3 | 75 | 33 | 3.0 | 0.25 |
| 4 | 65 | 19 | 3.0 | 0.31 |
| 5 | ([3]) | 0 | 3.0 | 0.05 |

[1] Percent speed is percent of maximum test speed.
[2] Percent torque is percent of maximum test torque at maximum test speed.
[3] Idle.

(ii) The following duty cycle applies for ramped-modal testing:

TABLE 2 OF § 1051.505.—RAMPED-MODAL CYCLE FOR TESTING SNOWMOBILES

| RMC mode | Time in mode | Speed (percent) [1] | Torque (percent) [2,3] |
|---|---|---|---|
| 1a Steady-state | 27 | Warm Idle | 0 |
| 1b Transition | 20 | Linear Transition | Linear Transition. |
| 2a Steady-state | 121 | 100 | 100 |
| 2b Transition | 20 | Linear Transition | Linear Transition. |
| 3a Steady-state | 347 | 65 | 19 |
| 3b Transition | 20 | Linear Transition | Linear Transition. |
| 4a Steady-state | 305 | 85 | 51 |
| 4b Transition | 20 | Linear Transition | Linear Transition. |
| 5a Steady-state | 272 | 5 | 33 |
| 5b Transition | 20 | Linear Transition | Linear Transition. |
| 6 Steady-state | 28 | Warm Idle | 0 |

[1] Percent speed is percent of maximum test speed.
[2] Advance from one mode to the next within a 20-second transition phase. During the transition phase, command a linear progression from the torque setting of the current mode to the torque setting of the next mode.
[3] Percent torque is percent of maximum test torque at maximum test speed.

(b) * * *

(3) Keep engine torque under 5 percent of maximum test torque.

* * * * *

(d) Ambient temperatures during testing must be between 20 °C and 30 °C (68 °F and 86 °F), or other representative test temperatures, as specified in paragraph (f) of this section.

(e) See 40 CFR part 1065 for detailed specifications of tolerances and calculations.

(f) You may test snowmobiles at ambient temperatures below 20 °C or using intake air temperatures below 20 °C if you show that such testing complies with 40 CFR 1065.10(c)(1). You must get our approval before you begin the emission testing. For example, the following approach would be appropriate to show that such testing complies with 40 CFR 1065.10(c)(1):

* * * * *

(5) Calculate the nominal intake air test temperature for each test mode as −10° C (14 °F) plus the temperature difference for the corresponding mode determined in paragraph (f)(4) of this section.

(6) Before the emissions test, select the appropriate carburetor jetting for −10° C (14 °F) conditions according to the jet chart. For each mode, maintain the inlet air temperature within 5° C (9° F) of the corresponding modal

temperature calculated in paragraph (f)(5) of this section.

* * * * *

■ 307. Section 1051.515 is amended by revising paragraphs (a)(5), (b), and (d)(2) to read as follows:

**§ 1051.515 How do I test my fuel tank for permeation emissions?**

* * * * *

(a) * * *

(5) Seal the fuel tank using fuel caps and other fittings (excluding petcocks) that can be used to seal openings in a production fuel tank. In cases where openings are not normally sealed on the fuel tank (such as hose-connection fittings and vents in fuel caps), these openings may be sealed using nonpermeable fittings such as metal or fluoropolymer plugs.

(b) *Permeation test run.* To run the test, take the following steps for a tank that was preconditioned as specified in paragraph (a) of this section:

(1) Weigh the sealed fuel tank and record the weight to the nearest 0.1 grams. You may use less precise weights as long as the difference in mass from the start of the testto the end of the test has at least three significant figures. Take this measurement within 8 hours of filling the tank with test fuel as specified in paragraph (a)(3) of this section.

(2) Carefully place the tank within a ventilated, temperature-controlled room or enclosure. Do not spill or add any fuel.

(3) Close the room or enclosure and record the time.

(4) Ensure that the measured temperature in the room or enclosure is 28±2 °C.

(5) Leave the tank in the room or enclosure for 14 days.

(6) Hold the temperature of the room or enclosure to 28±2 °C; measure and record the temperature at least daily.

(7) At the end of the soak period, weigh the sealed fuel tank and record the weight to the nearest 0.1 grams. You may use less precise weights as long as the difference in mass from the start of the test to the end of the test has at least three significant figures. Unless the same fuel is used in the preconditioning fuel soak and the permeation test run, record weight measurements on five separate days per week of testing. The test is void if a linear plot of tank weight vs. test days for the full soak period for permeation testing specified in paragraph (b)(5) of this section yields $r^2$ below 0.8. See 40 CFR 1065.602 for the equation to calculate $r^2$.

(8) Subtract the weight of the tank at the end of the test from the weight of the tank at the beginning of the test; divide the difference by the internal surface area of the fuel tank. Divide this g/m² value by the number of test days (using at least three significant figures) to calculate the g/m²/day emission rate. Example: If a tank with an internal surface area of 0.72 m² weighed 31882.3 grams at the beginning of the test and weighed 31813.8 grams after soaking for 14.03 days, then the g/m²/day emission rate would be—

$$(31882.3\ g - 31813.8\ g)/0.72\ m^2/14.03\ days = 6.78\ g/m^2/day.$$

(9) Round your result to the same number of decimal places as the emission standard.

(10) In cases where consideration of permeation rates, using good engineering judgment, leads you to conclude that soaking for 14 days is not long enough to measure weight change to at least three significant figures, you may soak for 14 days longer. In this case, repeat the steps in paragraphs (b)(8) and (9) of this section to determine the weight change for the full 28 days.

* * * * *

(d) * * *

(2) *UV exposure.* Perform a sunlight-exposure test by exposing the tank to an ultraviolet light of at least 24 W/m² (0.40 W-hr/m²/min) on the tank surface for at least 450 hours. Alternatively, the fuel tank may be exposed to direct natural sunlight for an equivalent period of time, as long as you ensure that the tank is exposed to at least 450 daylight hours.

* * * * *

■ 308. Section 1051.520 is revised to read as follows:

**§ 1051.520 How do I perform exhaust durability testing?**

Sections 1051.240 and 1051.243 describe the method for testing that must be performedto establish deterioration factors for an engine family.

■ 309. Section 1051.605 is revised to read as follows:

**§ 1051.605 What provisions apply to engines already certified under the motor-vehicle program or the Large Spark-ignition program?**

(a) *General provisions.* If you are an engine manufacturer, this section allows you to introduce into commerce new recreational vehicles, and engines for recreational vehicles,if the engines are already certified to the requirements that apply to spark-ignition engines under 40 CFR parts 85 and 86 or 40 CFR part 1048 for the appropriate model year. If you comply with all the provisions of this section, we consider the certificate issued under 40 CFR part 86 or 1048 for each engine to also be a valid certificate of conformity underthis part 1051 for its model year, without a separate application for certification under the requirements of this part 1051. See § 1051.610 for similar provisions that apply to vehicles that are already certified to the vehicle-based standards for motor vehicles.

(b) *Vehicle-manufacturer provisions.* If you are not an engine manufacturer, you mayinstall an engine certified for the appropriate model year under 40 CFR part 86 or 1048 in a recreational vehicle as long as you meet all the requirements and conditions specified in paragraph (d) of this section. If you modify the non-recreational engine in any of the ways described in paragraph (d)(2) of this section for installation in a recreational vehicle, we will consider you a manufacturer of recreational vehicles. Such engine modifications prevent you from using the provisions of this section.

(c) *Liability.* Engines for which you meet the requirements of this section are exempt from all the requirements and prohibitions of this part, except for those specified in this section. Engines exempted under this section must meet all the applicable requirements from 40 CFR parts 85 and 86 or 40 CFR part 1048. This paragraph (c) applies to engine manufacturers, vehicle manufacturers who use such an engine, and all other persons as if the engine were used in its originally intended application. The prohibited acts of 40CFR 1068.101(a)(1) apply to these new engines and vehicles; however, we consider the certificate issued under 40 CFR part 86 or 1048 for each engine to also be a valid certificate of conformity under this part 1051 for its model year. If we make a determination that these engines do not conform to the regulations during their useful life, we may require you to recall them under this part 1051 or under 40 CFR part 85 or 1068.505.

(d) *Specific requirements.* If you are an engine or vehicle manufacturer and meet all the following criteria and requirements regarding your new engine or vehicle, the vehicle using the engine is eligible for an exemption under this section:

(1) Your engine must be covered by a valid certificate of conformity issued under 40 CFR part 86 or 1048.

(2) You must not make any changes to the certified engine that could reasonably be expected to increase its exhaust emissions for any pollutant, or its evaporative emissions. For example, if you make any of the following changes to one of these engines, you do not qualify for this exemption:

(i) Change any fuel system or evaporative system parameters from the certified configuration (this does not apply to refueling controls).

(ii) Change, remove, or fail to properly install any other component, element of design, or calibration specified in the engine manufacturer's application for certification. This includes aftertreatment devices and all related components.

(iii) Modify or design the engine cooling system so that temperatures or heat rejection rates are outside the original engine manufacturer's specified ranges.

(3) You must show that fewer than 50 percent of the engine family's total sales in the United States are used in recreational vehicles. This includes engines used in any application, without regard to which company manufactures the vehicle or equipment.Show this as follows:

(i) If you are the original manufacturer of the engine, base this showing on your sales information.

(ii) In all other cases, you must get the original manufacturer of the engine to confirm this based on its sales information.

(4) You must ensure that the engine has the emission control information label we require under 40 CFR part 86 or 1048.

(5) You must add a permanent supplemental label to the engine in a position where it will remain clearly visible after installation in the vehicle. In the supplemental label, do the following:

(i) Include the heading: ''RECREATIONAL VEHICLE EMISSION CONTROLINFORMATION''.

(ii) Include your full corporate name and trademark. You may instead include the full corporate name and trademark of another company you choose to designate.

(iii) State: ''THIS ENGINE WAS ADAPTED FOR A RECREATIONAL USEWITHOUT AFFECTING ITS EMISSION CONTROLS.''.

(iv) State the date you finished installation (month and year), if applicable.

(6) The original and supplemental labels must be readily visible after the engine isinstalled in the vehicle or, if the vehicle obscures the engine's emission controlinformation label, the make sure the vehicle manufacturer attaches duplicate labels, as described in 40 CFR 1068.105.

(7) Send the Designated Compliance Officer a signed letter by the end of each calendar year (or less often if we tell you) with all the following information:

(i) Identify your full corporate name, address, and telephone number.

(ii) List the engine or vehicle models you expect to produce under this exemptionin the coming year.

(iii) State: ''We produce each listed [engine or vehicle] model for recreational application without making any changes that could increase its certified emission levels, as described in 40 CFR 1051.605.''.

(e) *Failure to comply.* If your engines do not meet the criteria listed in paragraph (d) of this section, they will be subject to the standards, requirements, and prohibitions of this part 1051 and the certificate issued under 40 CFR part 86 or 1048 will not be deemed to also be a certificate issued under this part 1051. Introducing these engines into commerce without a valid exemption or certificate of conformity under this part violates the prohibitions in 40 CFR 1068.101(a)(1).

(f) *Data submission.* We may require you to send us emission test data on any applicable nonroad duty cycles.

(g) *Participation in averaging, banking and trading.* Engines or vehicles adapted for recreational use under this section may not generate or use emission credits under this part 1051. These engines or vehicles may generate credits under the ABT provisions in 40 CFR part 86. These engines or vehicles must use emission credits under 40 CFR part 86 if they are certified to an FEL that exceeds an applicable standard.

■ 310. Section 1051.610 is revised to read as follows:

**§ 1051.610 What provisions apply to vehicles already certified under the motor-vehicle program?**

(a) *General provisions.* If you are a motor-vehicle manufacturer, this section allows you to introduce new recreational vehicles into commerce if the vehicle is already certified to the requirements that apply under 40 CFR parts 85 and 86. If you comply with all of the provisions of this section, we consider the certificate issued under 40 CFR part 86 for each motor vehicle to also be a valid certificate of conformity for the engine under this part 1051 for its model year, without a separate application for certification under the requirements of this part 1051. This section applies especially for highway motorcyclesthat are modified for recreational nonroad use. See § 1051.605 for similar provisions that apply to motor-vehicle engines or Large SI engines produced for recreational vehicles.

(b) *Nonroad vehicle-manufacturer provisions.* If you are not a motor-vehicle manufacturer, you may produce recreational vehicles from motor vehicles under this section as long as you meet all the requirements and conditions specified in paragraph (d) of this section. If you modify the motor vehicle or its engine in any of the ways describedin paragraph (d)(2) of this section, we will consider you a manufacturer of a new recreational vehicle. Such modifications prevent you from using the provisions of this section.

(c) *Liability.* Engines and vehicles for which you meet the requirements of this section are exempt from all the requirements and prohibitions of this part, except for those specifiedin this section. Engines exempted under this section must meet all the applicable requirements from 40 CFR parts 85 and 86. This applies to engine manufacturers, vehicle manufacturers, and all other persons as if the recreational vehicles were motor vehicles. The prohibited acts of 40 CFR 1068.101(a)(1) apply to these new recreational vehicles; however, we consider the certificate issued under 40 CFR part 86 for each motor vehicle to also be a valid certificate of conformity for the recreational vehicle underthis part 1051 for its model year. If we make a determination that these engines or vehicles do not conform to the regulations during their useful life, we may require you to recall them under 40 CFR part 86 or 40 CFR 1068.505.

(d) *Specific requirements.* If you are a motor-vehicle manufacturer and meet all the following criteria and requirements regarding your new recreational vehicle and its engine, the vehicle is eligible for an exemption under this section:

(1) Your vehicle must be covered by a valid certificate of conformity as a motor vehicle issued under 40 CFR part 86.

(2) You must not make any changes to the certified vehicle that we could reasonably expect to increase its exhaust emissions for any pollutant, or its evaporative emissionsif it is subject to evaporative-emission standards. For example, if you make any of the following changes, you do not qualify for this exemption:

(i) Change any fuel system parameters from the certified configuration.

(ii) Change, remove, or fail to properly install any other component, element of design, or calibration specified in the vehicle manufacturer's application for certification. This includes aftertreatment devices and all related components.

(iii) Modify or design the engine cooling system so that temperatures or heat rejection rates are outside the

original vehicle manufacturer's specified ranges.

(iv) Add more than 500 pounds to the curb weight of the originally certified motor vehicle.

(3) You must show that fewer than 50 percent of the engine family's total sales in the United States are used in recreational vehicles. This includes any type of vehicle, without regard to which company completes the manufacturing of the recreational vehicle. Show this as follows:

(i) If you are the original manufacturer of the vehicle, base this showing on your sales information.

(ii) In all other cases, you must get the original manufacturer of the vehicle to confirm this based on their sales information.

(4) The vehicle must have the vehicle emission control information we require under 40 CFR part 86.

(5) You must add a permanent supplemental label to the vehicle in a position where it will remain clearly visible. In the supplemental label, do the following:

(i) Include the heading: ''RECREATIONAL VEHICLE ENGINE EMISSIONCONTROL INFORMATION''.

(ii) Include your full corporate name and trademark. You may instead include the full corporate name and trademark of another company you choose to designate.

(iii) State: ''THIS VEHICLE WAS ADAPTED FOR RECREATIONAL USEWITHOUT AFFECTING ITS EMISSION CONTROLS.''.

(iv) State the date you finished modifying the vehicle (month and year), if applicable.

(6) The original and supplemental labels must be readily visible in the fully assembled vehicle.

(7) Send the Designated Compliance Officer a signed letter by the end of each calendar year (or less often if we tell you) with all the following information:

(i) Identify your full corporate name, address, and telephone number.

(ii) List the vehicle models you expect to produce under this exemption in the coming year.

(iii) State: ''We produced each listed engine or vehicle model for recreational application without making any changes that could increase its certified emission levels, as described in 40 CFR 1051.610.''.

(e) *Failure to comply.* If your engines or vehicles do not meet the criteria listed in paragraph (d) of this section, the engines will be subject to the standards, requirements, and prohibitions of this part 1051, and the certificate issued under 40 CFR part 86 will not be deemed to also be a certificate issued under this part 1051. Introducing these engines into commerce without a valid exemption or certificate of conformity under this part violates the prohibitions in 40 CFR 1068.101(a)(1).

(f) *Data submission.* We may require you to send us emission test data on any applicable nonroad duty cycles.

(g) *Participation in averaging, banking and trading.* Vehicles adapted for recreational use under this section may not generate or use emission credits under this part 1051. These engines may generate credits under the ABT provisions in 40 CFR part 86. These engines must use emission credits under 40 CFR part 86 if they are certified to an FEL that exceeds an applicable standard.

■ 311. Section 1051.615 is amended by revising paragraphs (a) introductory text, (b)introductory text, and (d) to read as follows:

**§ 1051.615 What are the special provisions for certifying small recreational engines?**

(a) You may certify ATVs with engines that have total displacement of less than 100 ccto the following exhaust emission standards instead of certifying them to the exhaust emission standards of subpart B of this part:

* * * * *

(b) You may certify off-highway motorcycles with engines that have total displacement of 70 cc or less to the following exhaust emission standards instead of certifying them to the exhaust emission standards of subpart B of this part:

* * * * *

(d) Measure steady-state emissions by testing the engine on an engine dynamometer using the equipment and procedures of 40 CFR part 1065 with either discrete-mode or ramped-modal cycles. You must use the type of testing you select in your application for certification for all testing you perform for that engine family. If we test your engines to confirm that they meet emission standards, we will do testing the same way. We may also perform other testing as allowed by the Clean Air Act. Measure steady-state emissions as follows:

(1) For discrete-mode testing, sample emissions separately for each mode, then calculate an average emission level for the whole cycle using the weighting factors specified for each mode. In each mode, operate the engine for at least 5 minutes, then sample emissions for at least 1 minute. Calculate cycle statistics for the sequence of modes and compare with the specified values in 40 CFR 1065.514 to confirm that the test is valid.

(2) For ramped-modal testing, start sampling at the beginning of the first mode and continue sampling until the end of the last mode. Calculate emissions and cycle statistics the same as for transient testing.

(3) Measure emissions by testing the engine on a dynamometer with one or more of the following sets of duty cycles to determine whether it meets applicable emission standards:

(i) The following duty cycle applies for discrete-mode testing:

TABLE 1 OF § 1051.615.—6-MODE DUTY CYCLE FOR RECREATIONAL ENGINES

| Mode No. | Engine speed (percent) [1] | Torque (percent) [2] | Minimum time in mode (minutes) | Weighting factors |
|---|---|---|---|---|
| 1 | 85 | 100 | 5.0 | 0.09 |
| 2 | 85 | 75 | 5.0 | 0.20 |
| 3 | 85 | 50 | 5.0 | 0.29 |
| 4 | 85 | 25 | 5.0 | 0.30 |
| 5 | 85 | 10 | 5.0 | 0.07 |
| 6 | ([3]) | 0 | 5.0 | 0.05 |

[1] Percent speed is percent of maximum test speed.
[2] Percent torque is percent of maximum test torque at maximum test speed.
[3] Idle.

(ii) The following duty cycle applies for ramped-modal testing:

TABLE 2 OF § 1051.615.—RAMPED-MODAL CYCLE FOR TESTING RECREATIONAL ENGINES

| RMC mode | Time | Speed (percent) [1 2] | Torque (percent) [2 3] |
|---|---|---|---|
| 1a Steady-state | 41 | Warm Idle | 0 |
| 1b Transition | 20 | Linear Transition | Linear Transition. |
| 2a Steady-state | 135 | 85 | 100 |
| 2b Transition | 20 | 85 | Linear Transition. |
| 3a Steady-state | 112 | 85 | 10 |
| 3b Transition | 20 | 85 | Linear Transition. |
| 4a Steady-state | 337 | 85 | 75 |
| 4b Transition | 20 | 85 | Linear Transition. |
| 5a Steady-state | 518 | 85 | 25 |
| 5b Transition | 20 | 85 | Linear Transition. |
| 6a Steady-state | 494 | 85 | 50 |
| 6b Transition | 20 | Linear Transition | Linear Transition. |
| 7 Steady-state | 43 | Warm Idle | 0 |

[1] Percent speed is percent of maximum test speed.
[2] Advance from one mode to the next within a 20-second transition phase. During the transition phase, command a linear progression from the torque setting of the current mode to the torque setting of the next mode.
[3] Percent torque is percent of maximum test torque at the commanded test speed.

(4) During idle mode, hold the speed within your specifications, keep the throttle fully closed, and keep engine torque under 5 percent of the peak torque value at maximum test speed.

(5) For the full-load operating mode, operate the engine at wide-open throttle.

(6) See 40 CFR part 1065 for detailed specifications of tolerances and calculations.

* * * * *

■ 312. Section 1051.620 is amended by revising paragraph (b)(1)(vi) to read as follows:

**§ 1051.620 When may a manufacturer obtain an exemption for competition recreational vehicles?**

* * * * *

(b) * * *

(1) * * *

(vi) The absence of a functional seat. (For example, a seat with less than 30 square inches of seating surface would generally not be considered a functional seat).

* * * * *

■ 313. A new § 1051.645 is added to subpart G to read as follows:

**§ 1051.645 What special provisions apply to branded engines?**

The following provisions apply if you identify the name and trademark of another company instead of your own on your emission control information label, as provided by § 1051.135(c)(2):

(a) You must have a contractual agreement with the other company that obligates that company to take the following steps:

(1) Meet the emission warranty requirements that apply under § 1051.120. This may involve a separate agreement involving reimbursement of warranty-related expenses.

(2) Report all warranty-related information to the certificate holder.

(b) In your application for certification, identify the company whose trademark you will use and describe the arrangements you have made to meet your requirements under this section.

(c) You remain responsible for meeting all the requirements of this chapter, including warranty and defect-reporting provisions.

■ 314. Section 1051.701 is amended by revising paragraphs (a), (c), and (d) and adding paragraphs (e), (f), and (g) to read as follows:

**§ 1051.701 General provisions.**

(a) You may average, bank, and trade emission credits for purposes of certification as described in this subpart to show compliance with the standards of this part. To do this you must certify your engines to Family Emission Limits (FELs) and show that your average emission levels are below the applicable standards in subpart B of this part, or that you have sufficient credits to offset a credit deficit for the model year (as calculated in § 1051.720).

* * * * *

(c) The definitions of Subpart I of this part apply to this subpart. The following definitions also apply:

(1) *Actual emission credits* means emission credits you have generated that we have verified by reviewing your final report.

(2) *Average standard* means a standard that allows you comply by averaging all your vehicles under this part. See subpart B of this part to determine which standards are average standards.

(3) *Averaging set* means a set of engines in which emission credits may be exchanged only with other engines in the same averaging set.

(4) *Broker* means any entity that facilitates a trade of emission credits between a buyer and seller.

(5) *Buyer* means the entity that receives emission credits as a result of a trade.

(6) *Reserved emission credits* means emission credits you have generated that we have not yet verified by reviewing your final report.

(7) *Seller* means the entity that provides emission credits during a trade.

(8) *Trade* means to exchange emission credits, either as a buyer or seller.

(d) In your application for certification, base your showing of compliance on projected production volumes for vehicles whose point of first retail sale is in the United States. As described in § 1051.730, compliance with the requirements of this subpart is determined at the end of the model year based on actual production volumes for vehicles whose point of first retail sale is in the United States. Do not include any of the following vehicles to calculate emission credits:

(1) Vehicles exempted under subpart G of this part or under 40 CFR part 1068.

(2) Exported vehicles.

(3) Vehicles not subject to the requirements of this part, such as those excluded under § 1051.5.

(4) Vehicles for which the location of first retail sale is in a state that has applicable state emission regulations for

that model year. However, this restriction does not apply if we determine that the state standards and requirements are equivalent to those of this part and that these vehicles sold in such a state will not generate credits under the state program. For example, you may not include vehicles certified for California if it has more stringent emission standards for these vehicles or those vehicles generate or use emission credits under the California program.

(5) Any other vehicles, where we indicate elsewhere in this part 1051 that they are not to be included in the calculations of this subpart.

(e) You may not use emission credits generated under this subpart to offset any emissions that exceed an FEL or standard, except as specified in § 1051.225(f)(1). This applies for all testing, including certification testing, in-use testing, selective enforcement audits, and other production-line testing.

(f) Emission credits may be used in the model year they are generated or in future model years. Emission credits may not be used for past model years.

(g) You may increase or decrease an FEL during the model year by amending your application for certification under § 1051.225.

■ 315. Section 1051.705 is amended by revising paragraphs (a), (b), and (c) and adding paragraph (e) to read as follows:

**§ 1051.705 How do I average emission levels?**

(a) As specified in subpart B of this part, certify each vehicle to an FEL, subject to the FEL caps in subpart B of this part.

(b) Calculate a preliminary average emission level according to § 1051.720 for each averaging set using projected U.S.-directed production volumes from your application for certification, excluding vehicles described in § 1051.701(d)(4).

(c) After the end of your model year, calculate a final average emission level according to § 1051.720 for each type of recreational vehicle or engine you manufacture or import. Use actual U.S.-directed production volumes, excluding vehicles described in § 1051.701(d)(4).

* * * * *

(e) If your average emission level is above the allowable average standard, you must obtain enough emission credits to offset the deficit by the due date for the final report required in § 1051.730. The emission credits used to address the deficit may come from emission credits you have banked or from emission credits you obtain through trading.

■ 316. Section 1051.710 is revised to read as follows:

**§ 1051.710 How do I generate and bank emission credits?**

(a) Banking is the retention of emission credits by the manufacturer generating the emission credits for use in averaging or trading in future model years. You may use banked emission credits only within the averaging set in which they were generated.

(b) If your average emission level is below the average standard, you may calculate credits according to § 1051.720. Credits you generate do not expire.

(c) You may generate credits if you are a certifying manufacturer.

(d) In your application for certification, designate any emission credits you intend to bank. These emission credits will be considered reserved credits. During the model year and before the due date for the final report, you may redesignate these emission credits for averaging or trading.

(e) You may use banked emission credits from the previous model year for averaging or trading before we verify them, but we may revoke these emission credits if we are unable to verify them after reviewing your reports or auditing your records.

(f) Reserved credits become actual emission credits only when we verify them in reviewing your final report.

■ 317. Section 1051.715 is revised to read as follows:

**§ 1051.715 How do I trade emission credits?**

(a) Trading is the exchange of emission credits between manufacturers. You may use traded emission credits for averaging, banking, or further trading transactions. Traded emission credits may be used only within the averaging set in which they were generated.

(b) You may trade banked credits to any certifying manufacturer.

(c) You may trade actual emission credits as described in this subpart. You may also trade reserved emission credits, but we may revoke these emission credits based on our review of your records or reports or those of the company with which you traded emission credits.

(d) If a negative emission credit balance results from a transaction, both the buyer and seller are liable, except in cases we deem to involve fraud. See § 1051.255(e) for cases involving fraud. We may void the certificates of all engine families participating in a trade that results in a manufacturer having a negative balance of emission credits. See § 1051.745.

■ 318. Section 1051.720 is amended by revising paragraphs (a)(2) and (a)(3) and adding paragraph (a)(4) to read as follows:

**§ 1051.720 How do I calculate my average emission level or emission credits?**

(a) * * *

(2) For vehicles that have standards expressed as g/kW-hr and a useful life in kilometers, convert the useful life to kW-hr based on the maximum power output observed over the emission test and an assumed vehicle speed of 30 km/hr as follows: UL (kW-hr) = UL (km) × Maximum Test Power (kW) 30 ÷ km/hr. (Note: It is not necessary to include a load factor, since credit exchange is not allowed between vehicles certified to g/kW-hr standards and vehicles certified to g/km standards.)

(3) For evaporative emission standards expressed as g/m²/day, use the useful life value in years multiplied by 365.24 and calculate the average emission level as:

$$\text{Emission level} = \left[\sum_i (\text{FEL})_i \times (\text{UL})_i \times (\text{Production})_i\right] \Big/ \left[\sum_i (\text{Production})_i \times (\text{UL})_i\right]$$

Where:

$\text{FEL}_i$ = The FEL to which the engine family is certified, as described in paragraph (a)(4) of this section.

$\text{Production}_i$ = The number of vehicles in the engine family times the average internal surface area of the vehicles' fuel tanks.

(4) Determine the FEL for calculating credits under paragraph (a)(3) of this section using any of the following values:

(i) The FEL to which the tank is certified, as long as the FEL is at or below 3.0 g/m²/day.

(ii) 10.4 g/m²/day. However, if you use this value to establish the FEL for any of your tanks, you must use this value to establish the FEL for every tank not covered by paragraph (a)(4)(i) of this section.

(iii) The measured permeation rate of the tank or the measured permeation rate of a thinner-walled tank of the same material. However, if you use this approach to establish the FEL for any of your tanks, you must establish an FEL based on emission measurements for every tank not covered by paragraph (a)(4)(i) of this section.

* * * * *

■ 319. Section 1051.725 is revised to read as follows:

**§ 1051.725 What must I include in my applications for certification?**

(a) You must declare in your applications for certification your intent to use the provisions of this subpart. You must also declare the FELs you select for each engine family. Your FELs must comply with the specifications of subpart B of this part, including the FEL caps. FELs must be expressed to the same number of decimal places as the applicable standards.

(b) Include the following in your application for certification:

(1) A statement that, to the best of your belief, you will not have a negative balance of emission credits for any averaging set when all emission credits are calculated at the end of the year. This means that if you believe that your average emission level will be above the standard (*i.e.,* that you will have a deficit for the model year), you must have banked credits (or project to have received traded credits) to offset the deficit.

(2) Detailed calculations of projected emission credits (positive or negative) based on projected production volumes. If you will generate positive emission credits, state specifically where the emission credits will be applied (for example, whether they will be traded or reserved for banking). If you have projected negative emission credits, state the source of positive emission credits to offset the negative emission credits. Describe whether the emission credits are actual or reserved and whether they will come from banking, trading, or a combination of these. If you intend to rely on trading, identify from which manufacturer the emission credits will come.

■ 320. Section 1051.730 is revised to read as follows:

**§ 1051.730 What ABT reports must I send to EPA?**

(a) If any of your engine families are certified using the ABT provisions of this subpart, you must send an end-of-year report within 90 days after the end of the model year and a final report within 270 days after the end of the model year. We may waive the requirement to send the end-of year report, as long as you send the final report on time.

(b) Your end-of-year and final reports must include the following information for each engine family:

(1) Engine-family designation.

(2) The emission standards that would otherwise apply to the engine family.

(3) The FEL for each pollutant. If you changed an FEL during the model year, identify each FEL you used and calculate the positive or negative emission credits under each FEL. Also, describe how the applicable FEL can be identified for each vehicle you produced. For example, you might keep a list of vehicle identification numbers that correspond with certain FEL values.

(4) The projected and actual production volumes for the model year with a point of retail sale in the United States. If you changed an FEL during the model year, identify the actual production volume associated with each FEL.

(5) For vehicles that have standards expressed as g/kW-hr, maximum engine power for each vehicle configuration, and the sales-weighted average engine power for the engine family.

(6) Useful life.

(7) Calculated positive or negative emission credits. Identify any emission credits that you traded, as described in paragraph (d)(1) of this section.

(c) Your end-of-year and final reports must include the following additional information:

(1) Show that your net balance of emission credits in each averaging set in the applicable model year is not negative.

(2) State whether you will reserve any emission credits for banking.

(3) State that the report's contents are accurate.

(d) If you trade emission credits, you must send us a report within 90 days after the transaction, as follows:

(1) As the seller, you must include the following information in your report:

(i) The corporate names of the buyer and any brokers.

(ii) A copy of any contracts related to the trade.

(iii) The engine families that generated emission credits for the trade, including the number of emission credits from each family.

(2) As the buyer, you must include the following information in your report:

(i) The corporate names of the seller and any brokers.

(ii) A copy of any contracts related to the trade.

(iii) How you intend to use the emission credits, including the number of emission credits you intend to apply to each engine family (if known).

(e) Send your reports electronically to the Designated Compliance Officer using an approved information format. If you want to use a different format, send us a written request with justification for a waiver.

(f) Correct errors in your end-of-year report or final report as follows:

(1) You may correct any errors in your end-of-year report when you prepare the final report, as long as you send us the final report by the time it is due.

(2) If you or we determine within 270 days after the end of the model year that errors mistakenly decrease your balance of emission credits, you may correct the errors and recalculate the balance of emission credits. You may not make these corrections for errors that are determined more than 270 days after the end of the model year. If you report a negative balance of emission credits, we may disallow corrections under this paragraph (f)(2).

(3) If you or we determine anytime that errors mistakenly increase your balance of emission credits, you must correct the errors and recalculate the balance of emission credits.

■ 321. Section 1051.735 is revised to read as follows:

**§ 1051.735 What records must I keep?**

(a) You must organize and maintain your records as described in this section. We may review your records at any time.

(b) Keep the records required by this section for eight years after the due date for the end-of-year report. You may use any appropriate storage formats or media, including paper, microfilm, or computer diskettes.

(c) Keep a copy of the reports we require in § 1051.725 and § 1051.730.

(d) Keep the following additional records for each engine you produce under the ABT program:

(1) Engine family designation.

(2) Engine identification number.

(3) FEL and useful life.

(4) For vehicles that have standards expressed as g/kW-hr, maximum engine power.

(5) Build date and assembly plant.

(6) Purchaser and destination.

(e) We may require you to keep additional records or to send us relevant information not required by this section.

■ 322. A new § 1051.740 is added to subpart H to read as follows:

**§ 1051.740 Are there special averaging provisions for snowmobiles?**

For snowmobiles, you may only use credits for the same phase or set of standards against which they were generated, except as allowed by this section.

(a) *Restrictions.* (1) You may not use any Phase 1 or Phase 2 credits for Phase 3 compliance.

(2) You may not use Phase 1 HC credits for Phase 2 HC compliance. However, because the Phase 1 and Phase 2 CO standards are the same, you may use Phase 1 CO credits for compliance with the Phase 2 CO standards.

(b) *Special credits for next phase of standards.* You may choose to generate credits early for banking for purposes of compliance with later phases of standards as follows:

(1) If your corporate average emission level at the end of the model year exceeds the applicable (current) phase of standards (without the use of traded or previously banked credits), you may choose to redesignate some of your snowmobile production to a calculation to generate credits for a future phase of standards. To generate credits the snowmobiles designated must have an FEL below the emission level of that set of standards. This can be done on a pollutant specific basis.

(2) Do not include the snowmobiles that you redesignate in the final compliance calculation of your average emission level for the otherwise applicable (current) phase of standards. Your average emission level for the remaining (non-redesignated) snowmobiles must comply with the otherwise applicable (current) phase of standards.

(3) Include the snowmobiles that you redesignate in a separate calculation of your average emission level for redesignated engines. Calculate credits using this average emission level relative to the specific pollutant in the future phase of standards. These credits may be used for compliance with the future standards.

(4) For generating early Phase 3 credits, you may generate credits for $HC+NO_X$ or CO separately as described:

(i) To determine if you qualify to generate credits in accordance with paragraphs (b)(1) through (3) of this section, you must meet the credit trigger level. For $HC+NO_X$ this value is 62 g/kW-hr (which would be the $HC+NO_X$ standard that would result from inputting the highest allowable CO standard (275 g/kW-hr) into the Phase 3 equation). For CO the value is 200 g/kW-hr (which would be the CO standard that would result from inputting the highest allowable $HC+NO_X$ standard (90 g/kW-hr) into the Phase 3 equation).

(ii) $HC+NO_X$ and CO credits for Phase 3 are calculated relative to the 62 g/kW-hr and 200 g/kW-hr values, respectively.

(5) Credits can also be calculated for Phase 3 using both sets of standards. Without regard to the trigger level values, if your net emission reduction for the redesignated averaging set exceeds the requirements of Phase 3 in § 1051.103 (using both $HC+NO_X$ and CO in the Phase 3 equation in § 1051.103), then your credits are the difference between the Phase 3 reduction requirement of that section and your calculated value.

■ 323. A new § 1051.745 is added to subpart H to read as follows:

**§ 1051.745 What can happen if I do not comply with the provisions of this subpart?**

(a) For each engine family participating in the ABT program, the certificate of conformity is conditional upon full compliance with the provisions of this subpart during and after the model year. You are responsible to establish to our satisfaction that you fully comply with applicable requirements. We may void the certificate of conformity for an engine family if you fail to comply with any provisions of this subpart.

(b) You may certify your engine family to an FEL above an applicable standard based on a projection that you will have enough emission credits to avoid a negative credit balance for each averaging set for the applicable model year. However, except as allowed in § 1051.145(h), we may void the certificate of conformity if you cannot show in your final report that you have enough actual emission credits to offset a deficit for any pollutant in an engine family.

(c) We may void the certificate of conformity for an engine family if you fail to keep records, send reports, or give us information we request.

(d) You may ask for a hearing if we void your certificate under this section (see § 1051.820).

■ 324. Section 1051.801 is revised to read as follows:

**§ 1051.801 What definitions apply to this part?**

The following definitions apply to this part. The definitions apply to all subparts unless we note otherwise. All undefined terms have the meaning the Act gives to them. The definitions follow:

*Act* means the Clean Air Act, as amended, 42 U.S.C. 7401–7671q.

*Adjustable parameter* means any device, system, or element of design that someone can adjust (including those which are difficult to access) and that, if adjusted, may affect emissions or engine performance during emission testing or normal in-use operation. This includes, but is not limited to, parameters related to injection timing and fueling rate. You may ask us to exclude a parameter that is difficult to access if it cannot be adjusted to affect emissions without significantly degrading engine performance, or if you otherwise show us that it will not be adjusted in a way that affects emissions during in-use operation.

*Aftertreatment* means relating to a catalytic converter, particulate filter, or any other system, component, or technology mounted downstream of the exhaust valve (or exhaust port) whose design function is to decrease emissions in the engine exhaust before it is exhausted to the environment. Exhaust-gas recirculation (EGR) and turbochargers are not aftertreatment.

*All-terrain vehicle* means a land-based or amphibious nonroad vehicle that meets the criteria listed in paragraph (1) of this definition; or, alternatively the criteria of paragraph (2) of this definition but not the criteria of paragraph (3) of this definition:

(1) Vehicles designed to travel on four low pressure tires, having a seat designed to be straddled by the operator and handlebars for steering controls, and intended for use by a single operator and no other passengers are all-terrain vehicles.

(2) Other all-terrain vehicles have three or more wheels and one or more seats, are designed for operation over rough terrain, are intended primarily for transportation, and have a maximum vehicle speed of 25 miles per hour or higher. Golf carts generally do not meet these criteria since they are generally not designed for operation over rough terrain.

(3) Vehicles that meet the definition of ''offroad utility vehicle'' in this section are not all-terrain vehicles. However, § 1051.1(a) specifies that some offroad utility vehicles are required to meet the same requirements as all-terrain vehicles.

*Amphibious vehicle* means a vehicle with wheels or tracks that is designed primarily for operation on land and secondarily for operation in water.

*Auxiliary emission-control device* means any element of design that senses temperature, motive speed, engine RPM, transmission gear, or any other parameter for the purpose of activating, modulating, delaying, or deactivating

the operation of any part of the emission-control system.

*Brake power* means the usable power output of the engine, not including power required to fuel, lubricate, or heat the engine, circulate coolant to the engine, or to operate aftertreatment devices.

*Calibration* means the set of specifications and tolerances specific to a particular design, version, or application of a component or assembly capable of functionally describing its operation over its working range.

*Certification* means relating to the process of obtaining a certificate of conformity for an engine family that complies with the emission standards and requirements in this part.

*Certified emission level* means the highest deteriorated emission level in an engine family for a given pollutant from either transient or steady-state testing.

*Compression-ignition* means relating to a type of reciprocating, internal-combustion engine that is not a spark-ignition engine.

*Crankcase emissions* means airborne substances emitted to the atmosphere from any part of the engine crankcase's ventilation or lubrication systems. The crankcase is the housing for the crankshaft and other related internal parts.

*Critical emission-related component* means any of the following components:

(1) Electronic control units, aftertreatment devices, fuel-metering components, EGR-system components, crankcase-ventilation valves, all components related to charge-air compression and cooling, and all sensors and actuators associated with any of these components.

(2) Any other component whose primary purpose is to reduce emissions.

*Designated Compliance Officer* means the Manager, Engine Programs Group (6405–J), U.S. Environmental Protection Agency, 1200 Pennsylvania Ave., NW., Washington, DC 20460.

*Designated Enforcement Officer* means the Director, Air Enforcement Division (2242A), U.S. Environmental Protection Agency, 1200 Pennsylvania Ave., NW.,Washington, DC 20460.

*Deteriorated emission level* means the emission level that results from applying the appropriate deterioration factor to the official emission result of the emission-data vehicle.

*Deterioration factor* means the relationship between emissions at the end of useful life and emissions at the low-hour test point, expressed in one of the following ways:

(1) For multiplicative deterioration factors, the ratio of emissions at the end of useful life to emissions at the low-hour test point.

(2) For additive deterioration factors, the difference between emissions at the end of useful life and emissions at the low-hour test point.

*Emission-control system* means any device, system, or element of design that controls or reduces the regulated emissions from an engine.

*Emission-data vehicle* means a vehicle or engine that is tested for certification. This includes vehicles or engines tested to establish deterioration factors.

*Emission-related maintenance* means maintenance that substantially affects emissions or is likely to substantially affect emission deterioration.

*Engine configuration* means a unique combination of engine hardware and calibration within an engine family. Engines within a single engine configuration differ only with respect to normal production variability.

*Engine family* has the meaning given in § 1051.230.

*Evaporative* means relating to fuel emissions that result from permeation of fuel through the fuel system materials and from ventilation of the fuel system.

*Excluded* means relating to an engine that either:

(1) Has been determined not to be a nonroad engine, as specified in 40 CFR 1068.30; or

(2) Is a nonroad engine that is excluded from this part 1051 under the provisions of § 1051.5.

*Exempted* has the meaning given in 40 CFR 1068.30.

*Exhaust-gas recirculation* means a technology that reduces emissions by routing exhaust gases that had been exhausted from the combustion chamber(s) back into the engine to be mixed with incoming air before or during combustion. The use of valve timing to increase the amount of residual exhaust gas in the combustion chamber(s) that is mixed with incoming air before or during combustion is not considered exhaust-gas recirculation for the purposes of this part.

*Family emission limit (FEL)* means an emission level declared by the manufacturer to serve in place of an otherwise applicable emission standard under the ABT program in subpart H of this part. The family emission limit must be expressed to the same number of decimal places as the emission standard it replaces. The family emission limit serves as the emission standard for the engine family with respect to all required testing.

*Fuel line* means all hoses or tubing designed to contain liquid fuel or fuel vapor. This includes all hoses or tubing for the filler neck, for connections between dual fuel tanks, and for connecting a carbon canister to the fuel tank. This does not include hoses or tubing for routing crankcase vapors to the engine's intake or any other hoses or tubing that are open to the atmosphere.

*Fuel system* means all components involved in transporting, metering, and mixing the fuel from the fuel tank to the combustion chamber(s), including the fuel tank, fuel tank cap, fuel pump, fuel filters, fuel lines, carburetor or fuel-injection components, and all fuel-system vents. In the case where the fuel tank cap or other components (excluding fuel lines) are directly mounted on the fuel tank, they are considered to be a part of the fuel tank.

*Fuel type* means a general category of fuels such as gasoline or natural gas. There can be multiple grades within a single fuel type, such as winter-grade and all-season gasoline.

*Good engineering judgment* means judgments made consistent with generally accepted scientific and engineering principles and all available relevant information. See 40 CFR 1068.5 for the administrative process we use to evaluate good engineering judgment.

*Hydrocarbon (HC)* means the hydrocarbon group on which the emission standards are based for each fuel type. For alcohol-fueled engines, HC means total hydrocarbon equivalent (THCE). For all other engines, HC means nonmethane hydrocarbon (NMHC).

*Identification number* means a unique specification (for example, a model number/serial number combination) that allows someone to distinguish a particular vehicle or engine from other similar engines.

*Low-hour* means relating to an engine with stabilized emissions and represents the undeteriorated emission level. This would generally involve less than 24 hours or 240 kilometers of operation.

*Manufacturer* has the meaning given in section 216(1) of the Act. In general, this term includes any person who manufactures a vehicle or engine for sale in the United States or otherwise introduces a new vehicle or engine into commerce in the United States. This includes importers that import vehicles or engines for resale.

*Maximum engine power* has the meaning given in 40 CFR 90.3.

*Maximum test power* means the maximum brake power of an engine at test conditions.

*Maximum test speed* has the meaning given in 40 CFR 1065.1001.

*Maximum test torque* has the meaning given in 40 CFR 1065.1001.

*Model year* means one of the following things:

(1) For freshly manufactured vehicles (see definition of ''new,'' paragraph (1)), model year means one of the following:

(i) Calendar year.

(ii) Your annual new model production period if it is different than the calendar year. This must include January 1 of the calendar year for which the model year is named. It may not begin before January 2 of the previous calendar year and it must end by December 31 of the named calendar year.

(2) For an engine originally manufactured as a motor-vehicle engine or a stationary engine that is later intended to be used in a vehicle subject to the standards and requirements of this part 1051, model year means the calendar year in which the engine was originally produced (see definition of ''new,'' paragraph (2)).

(3) For a nonroad engine that has been previously placed into service in an application covered by 40 CFR part 90, 91, or 1048, where that engine is installed in a piece of equipment that is covered by this part 1051, model year means the calendar year in which the engine was originally produced (see definition of ''new ,'' paragraph (3)).

(4) For engines that are not freshly manufactured but are installed in new recreational vehicles, model year means the calendar year in which the engine is installed in the recreational vehicle (see definition of ''new,'' paragraph (4)).

(5) For imported engines:

(i) For imported engines described in paragraph (5)(i) of the definition of ''new,'' *model year* has the meaning given in paragraphs (1) through (4) of this definition.

(ii) For imported engines described in paragraph (5)(ii) of the definition of ''new,'' *model year* means the calendar year in which the vehicle is modified.

*Motor vehicle* has the meaning given in 40 CFR 85.1703(a).

*New* means relating to any of the following things:

(1) A freshly manufactured vehicle for which the ultimate purchaser has never received the equitable or legal title. This kind of vehicle might commonly be thought of as ''brand new.'' In the case of this paragraph (1), the vehicle becomes new when it is fully assembled for the first time. The engine is no longer new when the ultimate purchaser receives the title or the product is placed into service, whichever comes first.

(2) An engine originally manufactured as a motor-vehicle engine or a stationary engine that is later intended to be used in a vehicle subject to the standards and requirements of this part 1051. In this case, the engine is no longer a motor-vehicle or stationary engine and becomes new. The engine is no longer new when it is placed into service as a recreational vehicle covered by this part 1051.

(3) A nonroad engine that has been previously placed into service in an application covered by 40 CFR part 90, 91, or 1048, where that engine is installed in a piece of equipment that is covered by this part 1051. The engine is no longer new when it is placed into service in a recreational vehicle covered by this part 1051. For example, this would apply to a marine propulsion engine that is no longer used in a marine vessel.

(4) An engine not covered by paragraphs (1) through (3) of this definition that is intended to be installed in a new vehicle covered by this part 1051. The engine is no longer new when the ultimate purchaser receives a title for the vehicle or it is placed into service, whichever comes first. This generally includes installation of used engines in new recreational vehicles.

(5) An imported vehicle or engine, subject to the following provisions:

(i) An imported recreational vehicle or recreational-vehicle engine covered by a certificate of conformity issued under this part that meets the criteria of one or more of paragraphs (1) through (4) of this definition, where the original manufacturer holds the certificate, is new as defined by those applicable paragraphs.

(ii) An imported recreational vehicle or recreational-vehicle engine covered by a certificate of conformity issued under this part, where someone other than the original manufacturer holds the certificate (such as when the engine is modified after its initial assembly), becomes new when it is imported. It is no longer new when the ultimate purchaser receives a title for the vehicle or engine or it is placed into service, whichever comes first.

(iii) An imported recreational vehicle or recreational-vehicle engine that is not covered by a certificate of conformity issued under this part at the time of importation is new, but only if it was produced on or after the 2007 model year. This addresses uncertified engines and equipment initially placed into service that someone seeks to import into the United States. Importation of this kind of new nonroad engine (or equipment containing such an engine) is generally prohibited by 40 CFR part 1068.

*Noncompliant* means relating to a vehicle that was originally covered by a certificate of conformity, but is not in the certified configuration or otherwise does not comply with the conditions of the certificate.

*Nonconforming* means relating to vehicle not covered by a certificate of conformity that would otherwise be subject to emission standards.

*Nonmethane hydrocarbon* means the difference between the emitted mass of total hydrocarbons and the emitted mass of methane.

*Nonroad* means relating to nonroad engines or equipment that includes nonroad engines.

*Nonroad engine* has the meaning given in 40 CFR 1068.30. In general this means all internal-combustion engines except motor-vehicle engines, stationary engines, engines used solely for competition, or engines used in aircraft.

*Off-highway motorcycle* means a two-wheeled vehicle with a nonroad engine and a seat (excluding marine vessels and aircraft). (Note: highway motorcycles are regulated under 40 CFR part 86.)

*Official emission result* means the measured emission rate for an emission-data vehicle on a given duty cycle before the application of any deterioration factor, but after the applicability of regeneration adjustment factors.

*Offroad utility vehicle* means a nonroad vehicle that has four or more wheels, seating for two or more persons, is designed for operation over rough terrain, and has either a rear payload of 350 pounds or more or seating for six or more passengers. Vehicles intended primarily for recreational purposes that are not capable of transporting six passengers (such as dune buggies) are not offroad utility vehicles. (**Note:** § 1051.1(a) specifies that some offroad utility vehicles are required to meet the requirements that apply for all-terrain vehicles.)

*Owners manual* means a document or collection of documents prepared by the engine manufacturer for the owner or operator to describe appropriate engine maintenance, applicable warranties, and any other information related to operating or keeping the engine. The owners manual is typically provided to the ultimate purchaser at the time of sale.

*Oxides of nitrogen* has the meaning given in 40 CFR 1065.1001.

*Phase 1* means relating to Phase 1 standards of §§ 1051.103, 1051.105, or 1051.107, or other Phase 1 standards specified in subpart B of this part.

*Phase 2* means relating to Phase 2 standards of § 1051.103, or other Phase 2 standards specified in subpart B of this part.

*Phase 3* means relating to Phase 3 standards of § 1051.103, or other Phase

3 standards specified in subpart B of this part.

*Placed into service* means put into initial use for its intended purpose.

*Point of first retail sale* means the location at which the initial retail sale occurs. This generally means an equipment dealership, but may also include an engine seller or distributor in cases where loose engines are sold to the general public for uses such as replacement engines.

*Recreational* means, for purposes of this part, relating to snowmobiles, all-terrain vehicles, off-highway motorcycles, and other vehicles that we regulate under this part. Note that 40 CFR part 90 applies to engines used in other recreational vehicles.

*Revoke* has the meaning given in 40 CFR 1068.30.

*Round* has the meaning given in 40 CFR 1065.1001, unless otherwise specified.

*Scheduled maintenance* means adjusting, repairing, removing, disassembling, cleaning, or replacing components or systems periodically to keep a part or system from failing, malfunctioning, or wearing prematurely. It also may mean actions you expect are necessary to correct an overt indication of failure or malfunction for which periodic maintenance is not appropriate.

*Small-volume manufacturer* means one of the following:

(1) For motorcycles and ATVs, a manufacturer that sold motorcycles or ATVs before 2003 and had annual U.S.-directed production of no more than 5,000 off-road motorcycles and ATVs (combined number) in 2002 and all earlier calendar years. For manufacturers owned by a parent company, the limit applies to the production of the parent company and all of its subsidiaries.

(2) For snowmobiles, a manufacturer that sold snowmobiles before 2003 and had annual U.S.-directed production of no more than 300 snowmobiles in 2002 and all earlier model years. For manufacturers owned by a parent company, the limit applies to the production of the parent company and all of its subsidiaries.

(3) A manufacturer that we designate to be a small-volume manufacturer under § 1051.635.

*Snowmobile* means a vehicle designed to operate outdoors only over snow-covered ground, with a maximum width of 1.5 meters or less.

*Spark-ignition* means relating to a gasoline-fueled engine or any other type of engine with a spark plug (or other sparking device) and with operating characteristics significantly similar to the theoretical Otto combustion cycle. Spark-ignition engines usually use a throttle to regulate intake air flow to control power during normal operation.

*Suspend* has the meaning given in 40 CFR 1068.30.

*Test sample* means the collection of engines selected from the population of an engine family for emission testing. This may include testing for certification, production-line testing, or in-use testing.

*Test vehicle or engine* means an engine in a test sample.

*Total hydrocarbon* means the combined mass of organic compounds measured by the specified procedure for measuring total hydrocarbon, expressed as a hydrocarbon with a hydrogen-to-carbon mass ratio of 1.85:1.

*Total hydrocarbon equivalent* means the sum of the carbon mass contributions of non-oxygenated hydrocarbons, alcohols and aldehydes, or other organic compounds that are measured separately as contained in a gas sample, expressed as exhaust hydrocarbon from petroleum-fueled engines. The hydrogen-to-carbon ratio of the equivalent hydrocarbon is 1.85:1.

*Ultimate purchaser* means, with respect to any new nonroad equipment or new nonroad engine, the first person who in good faith purchases such new nonroad equipment or new nonroad engine for purposes other than resale.

*Ultraviolet light* means electromagnetic radiation with a wavelength between 300 and 400 nanometers.

*United States* has the meaning given in 40 CFR 1068.30.

*Upcoming model year* means for an engine family the model year after the one currently in production.

*U.S.-directed production volume* means the number of vehicle units, subject to the requirements of this part, produced by a manufacturer for which the manufacturer has a reasonable assurance that sale was or will be made to ultimate purchasers in the United States. This includes vehicles for which the location of first retail sale is in a state that has applicable state emission regulations for that model year, unless we specify otherwise.

*Useful life* means the period during which a vehicle is required to comply with all applicable emission standards, specified as a given number of calendar years and kilometers (whichever comes first). In some cases, useful life is also limited by a given number of hours of engine operation. If an engine has no odometer (or hour meter), the specified number of kilometers (or hours) does not limit the period during which an in-use vehicle is required to comply with emission standards, unless the degree of service accumulation can be verified separately. The useful life for an engine family must be at least as long as both of the following:

(1) The expected average service life before the vehicle is remanufactured or retired from service.

(2) The minimum useful life value.

*Void* has the meaning given in 40 CFR 1068.30.

*We (us, our)* means the Administrator of the Environmental Protection Agency and any authorized representatives.

*Wide-open throttle* means maximum throttle opening. Unless this is specified at a given speed, it refers to maximum throttle opening at maximum speed. For electronically controlled or other engines with multiple possible fueling rates, wide-open throttle also means the maximum fueling rate at maximum throttle opening under test conditions.

■ 325. Section 1051.805 is amended by adding ''CFR'', ''HC'', and ''NARA'' to the table in alphabetical order to read as follows:

**§ 1051.805 What symbols, acronyms, and abbreviations does this part use?**

The following symbols, acronyms, and abbreviations apply to this part:

* * * * *

CFR—Code of Federal Regulations.

* * * * *

HC—hydrocarbon.

* * * * *

NARA—National Archives and Records Administration.

* * * * *

■ 326. Section 1051.810 is revised to read as follows:

**§ 1051.810 What materials does this part reference?**

Documents listed in this section have been incorporated by reference into this part. The Director of the Federal Register approved the incorporation by reference as prescribed in 5 U.S.C. 552(a) and 1 CFR part 51. Anyone may inspect copies at the U.S. EPA, Air and Radiation Docket and Information Center, 1301 Constitution Ave., NW., Room B102,EPA West Building, Washington, DC 20460 or at the National Archives and Records Administration (NARA). For information on the availability of this material at NARA, call 202–741–6030, or go to: *http://www.archives.gov/federal_register/code_of_federal_regulations/ibr_locations.html.*

(a) *ASTM material.* Table 1 of this section lists material from the American Society for Testing and Materials that we have incorporated by reference. The

first column lists the number and name of the material. The second column lists the sections of this part where we reference it. Anyone may purchase copies of these materials from the American Society for Testing and Materials, 100 Barr Harbor Dr., P.O. Box C700, West Conshohocken, PA 19428 or *www.astm.com*. Table 1 follows:

TABLE 1 OF § 1051.810.—ASTM MATERIALS

| Document number and name | Part 1051 reference |
|---|---|
| ASTM D471–98, Standard Test Method for Rubber Property—Effect of Liquids | 1051.501 |
| ASTM D814–95 (reapproved 2000), Standard Test Method for RubberProperty Vapor Transmission of Volatile Liquids | 1051.245 |

(b) *SAE material*. Table 2 of this section lists material from the Society of Automotive Engineering that we have incorporated by reference. The first column lists the number and name of the material. The second column lists the sections of this part where we reference it. Anyone may purchase copies of these materials from the Society of Automotive Engineers, 400 Commonwealth Drive, Warrendale, PA 15096 or *www.sae.org*. Table 2 follows:

TABLE 2 OF § 1051.810.—SAE MATERIALS

| Document number and name | Part 1051 reference |
|---|---|
| SAE J30, Fuel and Oil Hoses, June 1998 | 1051.245, 1051.501 |
| SAE J1930, Electrical/Electronic Systems Diagnostic Terms, Definitions, Abbreviations, and Acronyms, May 1998 | 1051.135 |
| SAE J2260, Nonmetallic Fuel System Tubing with One or More Layers, November 1996 | 1051.245 |

■ 327. Section 1051.815 is revised to read as follows:

**§ 1051.815 What provisions apply to confidential information?**

(a) Clearly show what you consider confidential by marking, circling, bracketing, stamping, or some other method.

(b) We will store your confidential information as described in 40 CFR part 2. Also, we will disclose it only as specified in 40 CFR part 2. This applies both to any information you send us and to any information we collect from inspections, audits, or other site visits.

(c) If you send us a second copy without the confidential information, we will assume it contains nothing confidential whenever we need to release information from it.

(d) If you send us information without claiming it is confidential, we may make it available to the public without further notice to you, as described in 40 CFR 2.204.

■ 328. Section 1051.820 is revised to read as follows:

**§ 1051.820 How do I request a hearing?**

(a) You may request a hearing under certain circumstances, as described elsewhere in this part. To do this, you must file a written request, including a description of your objection and any supporting data, within 30 days after we make a decision.

(b) For a hearing you request under the provisions of this part, we will approve your request if we find that your request raises a substantial factual issue.

(c) If we agree to hold a hearing, we will use the procedures specified in 40 CFR part 1068, subpart G.

## PART 1068—GENERAL COMPLIANCE PROVISIONS FOR NONROAD PROGRAMS

■ 329. The authority citation for part 1068 is revised to read as follows:

**Authority:** 42 U.S.C. 7401–7671q.

■ 330. Section 1068.10 is revised to read as follows:

**§ 1068.10 What provisions apply to confidential information?**

(a) Clearly show what you consider confidential by marking, circling, bracketing, stamping, or some other method.

(b) We will store your confidential information as described in 40 CFR part 2. Also, we will disclose it only as specified in 40 CFR part 2. This applies both to any information you send us and to any information we collect from inspections, audits, or other site visits.

(c) If you send us a second copy without the confidential information, we will assume it contains nothing confidential whenever we need to release information from it.

(d) If you send us information without claiming it is confidential, we may make it available to the public without further notice to you, as described in 40 CFR 2.204.

■ 331. Section 1068.30 is amended by revising the definition for ''United States'' and adding definitions for ''Days'', ''Defeat device'', ''Equipment'', ''Exempted'', ''Good engineering judgment'', ''Motor vehicle'', ''Revoke'', ''Suspend'', and ''Void'' in alphabetical order to read as follows:

**§ 1068.30 What definitions apply to this part?**

* * * * *

*Days* means calendar days, including weekends and holidays.

*Defeat device* means has the meaning given in the standard-setting part.

* * * * *

*Equipment* means any vehicle, vessel, or other type of equipment that is subject to the requirements of this part, or that uses an engine that is subject to the requirements of this part.

* * * * *

*Exempted* means relating to an engine that is not required to meet otherwise applicable standards. Exempted engines must conform to regulatory conditions specified for an exemption in this part 1068 or in the standard-setting part. Exempted engines are deemed to be ''subject to'' the standards of the standard-setting part, even though they are not required to comply with the otherwise applicable requirements. Engines exempted with respect to a certain tier of standards may be required to comply with an earlier tier of standards as a condition of the exemption; for example, engines exempted with respect to Tier 3 standards may be required to comply with Tier 1 or Tier 2 standards.

*Good engineering judgment* means judgments made consistent with generally accepted scientific and engineering principles and all available relevant information. See 40 CFR 1068.5

for the administrative process we use to evaluate good engineering judgment.

* * * * *

*Motor vehicle* has the meaning given in 40 CFR 85.1703(a).

* * * * *

*Revoke* means to terminate the certificate or an exemption for an engine family. If we revoke a certificate or exemption, you must apply for a new certificate or exemption before continuing to introduce the affected engines into commerce. This does not apply to engines you no longer possess.

* * * * *

*Suspend* means to temporarily discontinue the certificate or an exemption for an engine family. If we suspend a certificate, you may not introduce into commerce engines from that engine family unless we reinstate the certificate or approve a new one. If we suspend an exemption, you may not introduce into commerce engines that were previously covered by the exemption unless we reinstate the exemption.

* * * * *

*United States* means the States, the District of Columbia, the Commonwealth of Puerto Rico, the Commonwealth of the Northern Mariana Islands, Guam, American Samoa, and the U.S. Virgin Islands.

*Void* means to invalidate a certificate or an exemption ab initio. If we void a certificate, all the engines introduced into commerce under that engine family for that model year are considered noncompliant, and you are liable for each engine introduced into commerce under the certificate and may face civil or criminal penalties or both. This applies equally to all engines in the engine family, including engines introduced into commerce before we voided the certificate. If we void an exemption, all the engines introduced into commerce under that exemption are considered uncertified (or nonconforming), and you are liable for each engine introduced into commerce under the exemption and may face civil or criminal penalties or both. You may not introduce into commerce any additional engines using the voided exemption.

* * * * *

■ 332. Section 1068.101 is amended by revising the introductory text and paragraphs (a) and (b) to read as follows:

**§ 1068.101 What general actions does this regulation prohibit?**

This section specifies actions that are prohibited and the maximum civil penalties that we can assess for each violation. The maximum penalty values listed in paragraphs (a) and (b) of this section are shown for calendar year 2004. As described in paragraph (e) of this section, maximum penalty limits for later years are set forth in 40 CFR part 19.

(a) The following prohibitions and requirements apply to manufacturers of new engines and manufacturers of equipment containing these engines, except as described in subparts C and D of this part:

(1) *Introduction into commerce.* You may not sell, offer for sale, or introduce or deliver into commerce in the United States or import into the United States any new engine or equipment after emission standards take effect for that engine or equipment, unless it has a valid certificate of conformity for its model year and the required label or tag. You also may not take any of the actions listed in the previous sentence with respect to any equipment containing an engine subject to this part's provisions, unless the engine has a valid and appropriate certificate of conformity and the required engine label or tag. For purposes of this paragraph (a)(1), an appropriate certificate of conformity is one that applies for the same model year as the model year of the equipment (except as allowed by § 1068.105(a)), covers the appropriate category of engines (such as locomotive or CI marine), and conforms to all requirements specified for equipment in the standard-setting part. The requirements of this paragraph (a)(1) also cover new engines you produce to replace an older engine in a piece of equipment, unless the engine qualifies for the replacement-engine exemption in § 1068.240. We may assess a civil penalty up to $32,500 for each engine in violation.

(2) *Reporting and recordkeeping.* This chapter requires you to record certain types of information to show that you meet our standards. You must comply with these requirements to make and maintain required records (including those described in § 1068.501). You may not deny us access to your records or the ability to copy your records if we have the authority to see or copy them. Also, you must give us the required reports or information without delay. Failure to comply with the requirements of this paragraph is prohibited. We may assess a civil penalty up to $32,500 for each day you are in violation.

(3) *Testing and access to facilities.* You may not keep us from entering your facility to test engines or inspect if we are authorized to do so. Also, you must perform the tests we require (or have the tests done for you). Failure to perform this testing is prohibited. We may assess a civil penalty up to $32,500 for each day you are in violation.

(b) The following prohibitions apply to everyone with respect to the engines to which this part applies:

(1) *Tampering.* You may not remove or disable a device or element of design that may affect an engine's emission levels. This restriction applies before and after the engine is placed in service. Section 1068.120 describes how this applies to rebuilding engines. For a manufacturer or dealer, we may assess a civil penalty up to $32,500 for each engine in violation. For anyone else, we may assess a civil penalty up to $2,750 for each engine in violation. This prohibition does not apply in any of the following situations:

(i) You need to repair an engine and you restore it to proper functioning when the repair is complete.

(ii) You need to modify an engine to respond to a temporary emergency and you restore it to proper functioning as soon as possible.

(iii) You modify a new engine that another manufacturer has already certified to meet emission standards and recertify it under your own engine family. In this case you must tell the original manufacturer not to include the modified engines in the original engine family.

(2) *Defeat devices.* You may not knowingly manufacture, sell, offer to sell, or install, an engine part that bypasses, impairs, defeats, or disables the engine's control the emissions of any pollutant. We may assess a civil penalty up to $2,750 for each part in violation.

(3) *Stationary engines.* For an engine that is excluded from any requirements of this chapter because it is a stationary engine, you may not move it or install it in any mobile equipment, except as allowed by the provisions of this chapter. You may not circumvent or attempt to circumvent the residence-time requirements of paragraph (2)(iii) of the nonroad engine definition in § 1068.30. We may assess a civil penalty up to $32,500 for each day you are in violation.

(4) *Competition engines.* For an uncertified engine or piece of equipment that is excluded or exempted from any requirements of this chapter because it is to be used solely for competition, you may not use it in a manner that is inconsistent with use solely for competition. We may assess a civil penalty up to $32,500 for each day you are in violation.

(5) *Importation.* You may not import an uncertified engine or piece of equipment if it is defined to be new in the standard-setting part and it is built

after emission standards start to apply in the United States. We may assess a civil penalty up to $32,500 for each day you are in violation. Note the following:

(i) The definition of new is broad for imported engines; uncertified engines and equipment (including used engines and equipment) are generally considered to be new when imported.

(ii) Engines that were originally manufactured before applicable EPA standards were in effect are generally not subject to emission standards.

(6) *Warranty*. You must meet your obligation to honor your emission-related warranty under § 1068.115 and to fulfill any applicable responsibilities to recall engines under § 1068.505. Failure to meet these obligations is prohibited. We may assess a civil penalty up to $32,500 for each engine in violation.

* * * * *

■ 333. Section 1068.105 is amended by revising paragraph (a) and renumbering the second paragraph (c)(1)(iii) as (c)(1)(iv) to read as follows:

**§ 1068.105 What other provisions apply to me specifically if I manufacture equipment needing certified engines?**

* * * * *

(a) *Transitioning to new engine-based standards.* If new emission standards apply in a given model year, your equipment in that model year must have engines that are certified to the new standards, except that you may use up your normal inventory of earlier engines that were built before the date of the new or changed standards. For example, if your normal inventory practice is to keep on hand a one-month supply of engines based on your upcoming production schedules, and a new tier of standard starts to apply for the 2015 model year, you may order engines based on your normal inventory requirements late in the engine manufacturer's 2014 model year and install those engines in your equipment, regardless of the date of installation. Also, if your model year starts before the end of the calendar year preceding new standards, you may use engines from the previous model year for those units you produce before January 1 of the year that new standards apply. If emission standards do not change in a given model year, you may continue to install engines from the previous model year without restriction. You may not circumvent the provisions of § 1068.101(a)(1) by stockpiling engines that were built before new or changed standards take effect. Note that this allowance does not apply for equipment subject to equipment-based standards.

* * * * *

■ 334. Section 1068.110 is amended by revising paragraph (e) to read as follows:

**§ 1068.110 What other provisions apply to engines in service?**

* * * * *

(e) *Warranty and maintenance.* Owners are responsible for properly maintaining their engines; however, owners may make warranty claims against the manufacturer for all expenses related to diagnosing and repairing or replacing emission-related parts, as described in § 1068.115. The warranty period begins when the engine is first placed into service. See the standard-setting part for specific requirements. It is a violation of the Act for anyone to disable emission controls; see § 1068.101(b)(1) and the standard-setting part.

■ 335. Section 1068.115 is amended by revising paragraph (a) to read as follows:

**§ 1068.115 When must manufacturers honor emission-related warranty claims?**

* * * * *

(a) As a certifying manufacturer, you may deny warranty claims only for failures that have been caused by the owner's or operator's improper maintenance or use, by accidents for which you have no responsibility, or by acts of God. For example, you would not need to honor warranty claims for failures that have been directly caused by the operator's abuse of an engine or the operator's use of the engine in a manner for which it was not designed, and are not attributable to you in any way.

* * * * *

■ 336. Section 1068.125 is amended by revising paragraph (b) introductory text to read as follows:

**§ 1068.125 What happens if I violate the regulations?**

* * * * *

(b) *Administrative penalties.* Instead of bringing a civil action, we may assess administrative penalties if the total is less than $270,000 against you individually. This maximum penalty may be greater if the Administrator and the Attorney General jointly determine that is appropriate for administrative penalty assessment, or if the limit is adjusted under 40 CFR part 19. No court may review such a determination. Before we assess an administrative penalty, you may ask for a hearing (subject to 40 CFR part 22).The Administrator may compromise or remit, with or without conditions, any administrative penalty that may be imposed under this section.

* * * * *

■ 337. Section 1068.201 is amended by revising paragraphs (c) and (i) to read as follows:

**§ 1068.201 Does EPA exempt or exclude any engines from the prohibited acts?**

* * * * *

(c) If you use an exemption under this subpart, we may require you to add a permanent label to your exempted engines. You may ask us to modify these labeling requirements if it is appropriate for your engine.

* * * * *

(i) If you want to take an action with respect to an exempted or excluded engine that is prohibited by the exemption or exclusion, such as selling it, you need to certify the engine. We will issue a certificate of conformity if you send us an application for certification showing that you meet all the applicable requirements from the standard-setting part and pay the appropriate fee. Also, in some cases, we may allow manufacturers to modify the engine as needed to make it identical to engines already covered by a certificate. We would base such an approval on our review of any appropriate documentation. These engines must have emission control information labels that accurately describe their status.

■ 338. Section 1068.240 is amended by revising paragraph (d) to read as follows:

**§ 1068.240 What are the provisions for exempting new replacement engines?**

* * * * *

(d) If the engine being replaced was certified to emission standards less stringent than those in effect when you produce the replacement engine, add a permanent label with your corporate name and trademark and the following language:

THIS ENGINE COMPLIES WITH U.S. EPA NONROAD EMISSION REQUIREMENTS FOR [Insert appropriate year reflecting when the applicable tier of emission standards for the replaced engine began to apply] ENGINES UNDER 40 CFR 1068.240. SELLING OR INSTALLING THIS ENGINE FOR ANY PURPOSE OTHER THAN TO REPLACE A NONROAD ENGINE BUILT BEFORE JANUARY 1, [Insert appropriate year reflecting when the next tier of emission standards began to apply] MAY BE A VIOLATION OF FEDERAL LAW SUBJECT TO CIVIL PENALTY.

* * * * *

■ 339. Section 1068.245 is amended by revising paragraphs (a)(4) and (f)(4) to read as follows:

**§ 1068.245 What temporary provisions address hardship due to unusual circumstances?**

(a) * * *

(4) No other allowances are available under the regulations in this chapter to avoid the impending violation, including the provisions of § 1068.250.

* * * * *

(f) * * *

(4) One of the following statements:

(i) If the engine does not meet any emission standards: ''THIS ENGINE IS EXEMPT UNDER 40 CFR 1068.245 FROM EMISSION STANDARDS AND RELATED REQUIREMENTS.''.

(ii) If the engine meets alternate emission standards as a condition of an exemption under this section, we may specify a different statement to identify the alternate emission standards.

■ 340. Section 1068.250 is amended by revising paragraph (k)(4) to read as follows:

**§ 1068.250 What are the provisions for extending compliance deadlines for small-volume manufacturers under hardship?**

* * * * *

(k) * * *

(4) One of the following statements:

(i) If the engine does not meet any emission standards: ''THIS ENGINE IS EXEMPT UNDER 40 CFR 1068.250 FROM EMISSION STANDARDS AND RELATED REQUIREMENTS.''.

(ii) If the engine meets alternate emission standards as a condition of an exemption under this section, we may specify a different statement to identify the alternate emission standards.

■ 341. Section 1068.255 is amended by revising paragraphs (a) introductory text and (b)(4) to read as follows:

**§ 1068.255 What are the provisions for exempting engines for hardship for equipment manufacturers and secondary engine manufacturers?**

* * * * *

(a) *Equipment exemption.* As an equipment manufacturer, you may ask for approval to produce exempted equipment for up to 12 months. We will generally limit this to the first year that new or revised emission standards apply. Send the Designated Officer a written request for an exemption before you are in violation. In your request, you must show you are not at fault for the impending violation and that you would face serious economic hardship if we do not grant the exemption. This exemption is not available under this paragraph (a) if you manufacture the engine you need for your own equipment or if complying engines are available from other engine manufacturers that could be used in your equipment, unless we allow it elsewhere in this chapter. We may impose other conditions, including provisions to use an engine meeting less stringent emission standards or to recover the lost environmental benefit. In determining whether to grantthe exemptions, we will consider all relevant factors, including the following:

* * * * *

(b) * * *

(4) One of the following statements:

(i) If the engine does not meet any emission standards: ''THIS ENGINE IS EXEMPT UNDER 40 CFR 1068.255 FROM EMISSION STANDARDS AND RELATED REQUIREMENTS.''.

(ii) If the engine meets alternate emission standards as a condition of an exemption under this section, we may specify a different statement to identify the alternate emission standards.

* * * * *

■ 342. Section 1068.260 is amended by revising paragraphs (a)(5), (a)(6), and (f) and adding paragraphs (g) and (h) to read as follows:

**§ 1068.260 What are the provisions for temporarily exempting engines for delegated final assembly?**

(a) * * *

(5) Ship the aftertreatment components directly to the equipment manufacturer, or arrange for separate shipment by the component manufacturer to the equipment manufacturer.

(6) Take appropriate additional steps to ensure that all engines will be in their certified configuration when installed by the equipment manufacturer. At a minimum do the following:

(i) Obtain annual affidavits from every equipment manufacturer to whom you sell engines under this section. Include engines that you sell through distributors or dealers. The affidavits must list the part numbers of the aftertreatment devices that equipment manufacturers install on each engine they purchase from you under this section.

(ii) If you sell more than 50 engines per model year under this section, you must annually audit four equipment manufacturers to whom you sell engines under this section. To select individual equipment manufacturers, divide all the affected equipment manufacturers into quartiles based on the number of engines they buy from you; select a single equipment manufacturer from each quartile each model year. Vary the equipment manufacturers you audit from year to year, though you may repeat an audit in a later model year if you find or suspect that a particular equipment manufacturer is not properly installing aftertreatment devices. If you sell engines to fewer than 16 equipment manufacturers under the provisions of this section, you may instead set up a plan to audit each equipment manufacturer on average once every four model years. Audits must involve the assembling companies' facilities, procedures, and production records to monitor their compliance with your instructions, must include investigation of some assembled engines, and must confirm that the number of aftertreatment devices shipped were sufficient for the number of engines produced. Where an equipment manufacturer is not located in the United States, you may conduct the audit at a distribution or port facility in the United States. You must keep records of these audits for five years after the end of the model year and provide a report to us describing any uninstalled or improperly installed aftertreatment components. Send us these reports within 90 days of the audit, except as specified in paragraph (d) of this section.

(iii) If you sell up to 50 engines per model year under this section, you must conduct audits as described in paragraph (a)(6)(ii) of this section or propose an alternative plan for ensuring that equipment manufacturers properly install aftertreatment devices.

(iv) If you produce engines and use them to produce equipment under the provisions of this section, you must take steps to ensure that your facilities, procedures, and production records are set up to ensure compliance with the provisions of this section, but you may meet your auditing responsibilities under this paragraph (a)(6) by maintaining a database showing how you pair aftertreatment components with the appropriate engines.

* * * * *

(f) You are liable for the in-use compliance of any engine that is exempt under this section.

(g) It is a violation of the Act for any person to complete assembly of the exempted engine without complying fully with the installation instructions.

(h) You may ask us to provide a temporary exemption to allow you to complete production of your engines at different facilities, as long as you maintain control of the engines until they are in their certified configuration. We may require you to take specific steps to ensure that such engines are in their certified configuration before reaching the ultimate purchaser. You may request an exemption under this paragraph (h) in your application for

certification, or in a separate submission to the Designated Compliance Officer.

■ 343. A new § 1068.265 is added to subpart C to read as follows:

**§ 1068.265 What provisions apply to engines that are conditionally exempted from certification?**

Engines produced under an exemption for replacement engines (§ 1068.240) or for hardship (§ 1068.245, § 1068.250, or § 1068.255) may need to meet alternate emission standards as a condition of the exemption. The standard-setting part may similarly exempt engines from all certification requirements, or allow us to exempt engines from all certification requirements for certain cases, but require the engines to meet alternate standards. In these cases, all the following provisions apply:

(a) Your engines must meet the alternate standards we specify in (or pursuant to) the exemption section, and all other requirements applicable to engines that are subject to such standards.

(b) You need not apply for and receive a certificate for the exempt engines. However, you must comply with all the requirements and obligations that would apply to the engines if you had received a certificate of conformity for them, unless we specifically waive certain requirements.

(c) You must have emission data from test engines using the appropriate procedures that demonstrate compliance with the alternate standards, unless the engines are identical in all material respects to engines that you have previously certified to standards that are the same as, or more stringent than, the alternate standards.

(d) Unless we specify otherwise elsewhere in the standard-setting part, you must meet the labeling requirements in the standard-setting part, with the following exceptions:

(1) Modify the engine-family designation by eliminating the character that identifies the model year.

(2) See the provisions of the applicable exemption for appropriate language to replace the compliance statement otherwise required in the standard-setting part.

(e) You may not generate emission credits for averaging, banking, or trading with engines meeting requirements under the provisions of this section.

(f) Keep records to show that you meet the alternate standards, as follows:

(1) If your exempted engines are identical to previously certified engines, keep your most recent application for certification for the certified engine family.

(2) If you previously certified a similar engine family, but have modified the exempted engine in a way that changes it from its previously certified configuration, keep your most recent application for certification for the certified engine family, a description of the relevant changes, and any test data or engineering evaluations that support your conclusions.

(3) If you have not previously certified a similar engine family, keep all the records we specify for the application for certification and any additional records the standard-setting part requires you to keep.

(g) We may require you to send us an annual report of the engines you produce under this section.

■ 344. Section 1068.305 is amended by revising paragraph (a) to read as follows:

**§ 1068.305 How do I get an exemption or exclusion for imported engines?**

(a) Complete the appropriate EPA declaration form before importing any nonconforming engine. These forms are available on the Internet at *http://www.epa.gov/OTAQ/imports/* or by phone at 734–214–4100.

* * * * *

■ 345. Section 1068.315 is amended by revising paragraphs (e), (f), and (g), adding and reserving paragraph (h), and adding paragraphs (i), and (j) to read as follows:

**§ 1068.315 What are the permanent exemptions for imported engines?**

* * * * *

(e) *Small-volume manufacturer exemption.* You may import a nonconforming engine if we grant hardship relief for a small-volume manufacturer, as described in § 1068.250.

(f) *Equipment-manufacturer hardship exemption.* You may import a nonconforming engine if we grant an exemption for the transition to new or revised emission standards, as described in § 1068.255.

(g) *Delegated-assembly exemption.* You may import a nonconforming engine for final assembly under the provisions of § 1068.260. However, this does not include the staged-assembly provisions of § 1068.260(h); see § 1068.330 for importing incomplete engines.

(h) [Reserved]

(i) *Identical configuration exemption.* You may import a nonconforming engine if it is identical to certified engines produced by the same manufacturer, subject to the following provisions:

(1) You may import only the following engines under this exemption:

(i) Large nonroad spark-ignition engines (see part 1048 of this chapter).

(ii) Recreational nonroad spark-ignition engines and equipment (see part 1051 of this chapter).

(iii) Land-based nonroad diesel engines (see part 1039 of this chapter).

(2) You must meet all the following criteria:

(i) You have owned the engine for at least six months.

(ii) You agree not to sell, lease, donate, trade, or otherwise transfer ownership of the engine for at least five years, or until the engine is eligible for the exemption in paragraph (g) of this section. During this period, the only acceptable way to dispose of the engine is to destroy or export it.

(iii) You use data or evidence sufficient to show that the engine is in a configuration that is identical to an engine the original manufacturer has certified to meet emission standards that apply at the time the manufacturer finished assembling or modifying the engine in question. If you modify the engine to make it identical, you must completely follow the original manufacturer's written instructions.

(3) We will tell you in writing if we find the information insufficient to show that the engine is eligible for this exemption. In this case, we will not consider your request further until you address our concerns.

(j) *Ancient engine exemption.* If you are not the original engine manufacturer, you may import a nonconforming engine that is subject to a standard-setting part and was first manufactured at least 21 years earlier, as long as it is still in its original configuration.

■ 346. Section 1068.325 is amended by revising the introductory text to read as follows:

**§ 1068.325 What are the temporary exemptions for imported engines?**

You may import engines under certain temporary exemptions, subject to the conditions in this section. We may ask the U.S. Customs Service to require a specific bond amount to make sure you comply with the requirements of this subpart. You may not sell or lease one of these engines while it is in the United States. You must eventually export the engine as we describe in this section unless you get a certificate of conformity for it or it qualifies for one of the permanent exemptions in § 1068.315. Section 1068.330 specifies an additional temporary exemption allowing you to import certain engines you intend to modify.

* * * * *

■ 347. Section 1068.330 is amended by revising the section heading and paragraph (c) and adding paragraph (a)(4) to read as follows:

**§ 1068.330 How do I import engines requiring further assembly?**

* * * * *

(a) * * *

(4) You import a complete or partially complete engine for installation in equipment subject to equipment-based standards for which you have either a certificate of conformity or an exemption that allows you to sell the equipment.

* * * * *

(c) If we approve a temporary exemption for an engine, you may import it under the conditions in this section. If you are not a certificate holder, we may ask the U.S. Customs Service to require a specific bond amount to make sure you comply with the requirements of this subpart.

* * * * *

■ 348. Section 1068.335 is amended by revising paragraph (b) to read as follows:

**§ 1068.335 What are the penalties for violations?**

* * * * *

(b) *Temporarily imported engines.* If you do not comply with the provisions of this subpart for a temporary exemption under § 1068.325 or § 1068.330, you may forfeit the total amount of the bond in addition to the sanctions we identify in paragraph (a) of this section. We will consider an engine to be exported if it has been destroyed or delivered to the U.S. Customs Service for export or other disposition under applicable Customs laws and regulations. EPA or the U.S. Customs Service may offer you a grace period to allow you to export a temporarily exempted engine without penalty after the exemption expires.

■ 349. Section 1068.410 is amended by adding paragraph (j) to read as follows:

**§ 1068.410 How must I select and prepare my engines?**

* * * * *

(j) *Retesting after reaching a fail decision.* You may retest your engines once a fail decision for the audit has been reached based on the first test on each engine under § 1068.420(c). You may test each engine up to a total of three times, but you must perform the same number of tests on each engine. You may further operate the engine to stabilize emission levels before testing, subject to the provisions of paragraph (f) of this section. We may approve retesting at other times if you send us a request with satisfactory justification.

■ 350. Section 1068.505 is amended by adding paragraph (g) to read as follows:

**§ 1068.505 How does the recall program work?**

* * * * *

(g) For purposes of recall, *owner* means someone who owns an engine affected by a remedial plan or someone who owns a piece of equipment that has one of these engines.

■ 351. Section 1068.510 is amended by revising paragraph (a)(10) to read as follows:

**§ 1068.510 How do I prepare and apply my remedial plan?**

(a) * * *

(10) If your employees or authorized warranty agents will not be doing the work, state who will and describe their qualifications.

* * * * *

**§ 1068.540 [Removed]**

■ 352. Section 1068.540 is removed.

■ 353. Part 1065 is revised to read as follows:

## PART 1065—ENGINE-TESTING PROCEDURES

### Subpart A—Applicability and General Provisions

Sec.

1065.1 Applicability.
1065.2 Submitting information to EPA under this part.
1065.5 Overview of this part 1065 and its relationship to the standard-setting part.
1065.10 Other procedures.
1065.12 Approval of alternate procedures.
1065.15 Overview of procedures for laboratory and field testing.
1065.20 Units of measure and overview of calculations.
1065.25 Recordkeeping.

### Subpart B—Equipment Specifications

1065.101 Overview.
1065.110 Work inputs and outputs, accessory work, and operator demand.
1065.120 Fuel properties and fuel temperature and pressure.
1065.122 Engine cooling and lubrication.
1065.125 Engine intake air.
1065.127 Exhaust gas recirculation.
1065.130 Engine exhaust.
1065.140 Dilution for gaseous and PM constituents.
1065.145 Gaseous and PM probes, transfer lines, and sampling system components.
1065.150 Continuous sampling.
1065.170 Batch sampling for gaseous and PM constituents.
1065.190 PM-stabilization and weighing environments for gravimetric analysis.
1065.195 PM-stabilization environment for in-situ analyzers.

### Subpart C—Measurement Instruments

1065.201 Overview and general provisions.
1065.202 Data updating, recording, and control.
1065.205 Performance specifications for measurement instruments.

Measurement of Engine Parameters and Ambient Conditions

1065.210 Work input and output sensors.
1065.215 Pressure transducers, temperature sensors, and dewpoint sensors.

Flow-Related Measurements

1065.220 Fuel flow meter.
1065.225 Intake-air flow meter.
1065.230 Raw exhaust flow meter.
1065.240 Dilution air and diluted exhaust flow meters.
1065.245 Sample flow meter for batch sampling.
1065.248 Gas divider.

CO and $CO_2$ Measurements

1065.250 Nondispersive infra-red analyzer.

Hydrocarbon Measurements

1065.260 Flame ionization detector.
1065.265 Nonmethane cutter.
1065.267 Gas chromatograph.

$NO_X$ Measurements

1065.270 Chemiluminescent detector.
1065.272 Nondispersive ultraviolet analyzer.

$O_2$ Measurements

1065.280 Paramagnetic and magnetopneumatic $O_2$ detection analyzers.

Air-to-Fuel Ratio Measurements

1065.284 Zirconia ($ZrO_2$) analyzer.

PM Measurements

1065.290 PM gravimetric balance.
1065.295 PM inertial balance for field-testing analysis.

### Subpart D—Calibrations and Verifications

1065.301 Overview and general provisions.
1065.303 Summary of required calibration and verifications
1065.305 Verifications for accuracy, repeatability, and noise.
1065.307 Linearity verification.
1065.308 Continuous gas analyzer system-response and updating-recording verification.
1065.309 Continuous gas analyzer uniform response verification.

Measurement of Engine Parameters and Ambient Conditions

1065.310 Torque calibration.
1065.315 Pressure, temperature, and dewpoint calibration.

Flow-Related Measurements

1065.320 Fuel-flow calibration.
1065.325 Intake-flow calibration.
1065.330 Exhaust-flow calibration.
1065.340 Diluted exhaust flow (CVS) calibration.
1065.341 CVS and batch sampler verification (propane check).
1065.345 Vacuum-side leak verification.

CO and $CO_2$ Measurements

1065.350 $H_2O$ interference verification for $CO_2$ NDIR analyzers.
1065.355 $H_2O$ and $CO_2$ interference verification for CO NDIR analyzers.

Hydrocarbon Measurements

1065.360 FID optimization and verification.
1065.362 Non-stoichiometric raw exhaust FID $O_2$ interference verification.
1065.365 Nonmethane cutter penetration fractions.

$NO_X$ Measurements

1065.370 CLD $CO_2$ and $H_2O$ quench verification.
1065.372 NDUV analyzer HC and $H_2O$ interference verification.
1065.376 Chiller $NO_2$ penetration.
1065.378 $NO_2$-to-NO converter conversion verification.

PM Measurements

1065.390 PM balance verifications and weighing process verification.
1065.395 Inertial PM balance verifications.

**Subpart E—Engine Selection, Preparation, and Maintenance**

1065.401 Test engine selection.
1065.405 Test engine preparation and maintenance.
1065.410 Maintenance limits for stabilized test engines.
1065.415 Durability demonstration.

**Subpart F—Performing an Emission Test in the Laboratory**

1065.501 Overview.
1065.510 Engine mapping.
1065.512 Duty cycle generation.
1065.514 Cycle-validation criteria.
1065.520 Pre-test verification procedures and pre-test data collection.
1065.525 Engine starting, restarting, and shutdown.
1065.530 Emission test sequence.
1065.545 Validation of proportional flow control for batch sampling.
1065.550 Gas analyzer range validation, drift validation, and drift correction.
1065.590 PM sample preconditioning and tare weighing.
1065.595 PM sample post-conditioning and total weighing.

**Subpart G—Calculations and Data Requirements**

1065.601 Overview.
1065.602 Statistics.
1065.610 Duty cycle generation.
1065.630 1980 international gravity formula.
1065.640 Flow meter calibration calculations.
1065.642 SSV, CFV, and PDP molar flow rate calculations.
1065.645 Amount of water in an ideal gas.
1065.650 Emission calculations.
1065.655 Chemical balances of fuel, intake air, and exhaust.
1065.659 Removed water correction.
1065.660 THC and NMHC determination.
1065.665 THCE and NMHCE determination.
1065.66 Dilution air background emission correction.
1065.670 $NO_X$ intake-air humidity and temperature corrections.
1065.672 Drift correction.
1065.675 CLD quench verification calculations.
1065.690 Buoyancy correction for PM sample media.
1065.695 Data requirements.

**Subpart H—Engine Fluids, Test Fuels, Analytical Gases and Other Calibration Standards**

1065.701 General requirements for test fuels.
1065.703 Distillate diesel fuel.
1065.705 Residual fuel. [Reserved]
1065.710 Gasoline.
1065.715 Natural gas.
1065.720 Liquefied petroleum gas.
1065.740 Lubricants.
1065.745 Coolants.
1065.750 Analytical Gases.
1065.790 Mass standards.

**Subpart I—Testing with Oxygenated Fuels**

1065.801 Applicability.
1065.805 Sampling system.
1065.845 Response factor determination.
1065.850 Calculations.

**Subpart J—Field Testing and Portable Emission Measurement Systems**

1065.901 Applicability.
1065.905 General provisions.
1065.910 PEMS auxiliary equipment for field testing.
1065.915 PEMS instruments.
1065.920 PEMS Calibrations and verifications.
1065.925 PEMS preparation for field testing.
1065.930 Engine starting, restarting, and shutdown.
1065.935 Emission test sequence for field testing.
1065.940 Emission calculations.

**Subpart K—Definitions and Other Reference Information**

1065.1001 Definitions.
1065.1005 Symbols, abbreviations, acronyms, and units of measure.
1065.1010 Reference materials.

**Authority:** 42 U.S.C. 7401–7671q.

## Subpart A—Applicability and General Provisions

### § 1065.1 Applicability.

(a) This part describes the procedures that apply to testing we require for the following engines or for vehicles using the following engines:

(1) Model year 2010 and later heavy-duty highway engines we regulate under 40 CFR part 86. For earlier model years, manufacturers may use the test procedures in this part or those specified in 40 CFR part 86, subpart N, according to § 1065.10.

(2) Land-based nonroad diesel engines we regulate under 40 CFR part 1039.

(3) Large nonroad spark-ignition engines we regulate under 40 CFR part 1048.

(4) Vehicles we regulate under 40 CFR part 1051 (such as snowmobiles and off-highway motorcycles) based on engine testing. See 40 CFR part 1051, subpart F, for standards and procedures that are based on vehicle testing.

(b) The procedures of this part may apply to other types of engines, as described in this part and in the standard-setting part.

(c) This part is addressed to you as a manufacturer, but it applies equally to anyone who does testing for you.

(d) Paragraph (a) of this section identifies the parts of the CFR that define emission standards and other requirements for particular types of engines. In this part, we refer to each of these other parts generically as the ''standard-setting part.'' For example, 40 CFR part 1051 is always the standard-setting part for snowmobiles.

(e) Unless we specify otherwise, the terms ''procedures'' and ''test procedures'' in this part include all aspects of engine testing, including the equipment specifications, calibrations, calculations, and other protocols and procedural specifications needed to measure emissions.

(f) For vehicles subject to this part and regulated under vehicle-based standards, use good engineering judgment to interpret the term ''engine'' in this part to include vehicles where appropriate.

(g) For additional information regarding these test procedures, visit our Web site at *www.epa.gov*, and in particular *http://www.epa.gov/otaq/testingregs.htm.*

### § 1065.2 Submitting information to EPA under this part.

(a) You are responsible for statements and information in your applications for certification, requests for approved procedures, selective enforcement audits, laboratory audits, production-line test reports, field test reports, or any other statements you make to us related to this part 1065.

(b) In the standard-setting part and in 40 CFR 1068.101, we describe your obligation to report truthful and complete information and the consequences of failing to meet this obligation. See also 18 U.S.C. 1001 and 42 U.S.C. 7413(c)(2).

(c) We may void any certificates associated with a submission of information if we find that you intentionally submitted false, incomplete, or misleading information. For example, if we find that you intentionally submitted incomplete information to mislead EPA when requesting approval to use alternate test procedures, we may void the certificates for all engines families certified based on emission data collected using the alternate procedures.

(d) We may require an authorized representative of your company to approve and sign the submission, and to

certify that all of the information submitted is accurate and complete.

(e) See 40 CFR 1068.10 for provisions related to confidential information. Note however that under 40 CFR 2.301, emission data is generally not eligible for confidential treatment.

**§ 1065.5 Overview of this part 1065 and its relationship to the standard-setting part.**

(a) This part specifies procedures that apply generally to testing various categories of engines. See the standard-setting part for directions in applying specific provisions in this part for a particular type of engine. Before using this part's procedures, read the standard-setting part to answer at least the following questions:

(1) What duty cycles must I use for laboratory testing?

(2) Should I warm up the test engine before measuring emissions, or do I need to measure cold-start emissions during a warm-up segment of the duty cycle?

(3) Which exhaust gases do I need to measure?

(4) Does testing require full-flow dilute sampling? Is raw sampling prohibited? Is partial-flow sampling prohibited?

(5) Do any unique specifications apply for test fuels?

(6) What maintenance steps may I take before or between tests on an emission-data engine?

(7) Do any unique requirements apply to stabilizing emission levels on a new engine?

(8) Do any unique requirements apply to test limits, such as ambient temperatures or pressures?

(9) Is field testing required, and are there different emission standards or procedures that apply to field testing?

(10) Are there any emission standards specified at particular engine-operating conditions or ambient conditions?

(11) Do any unique requirements apply for durability testing?

(b) The testing specifications in the standard-setting part may differ from the specifications in this part. In cases where it is not possible to comply with both the standard-setting part and this part, you must comply with the specifications in the standard-setting part. The standard-setting part may also allow you to deviate from the procedures of this part for other reasons.

(c) The following table shows how this part divides testing specifications into subparts:

| This subpart . . . | Describes these specifications or procedures . . . |
|---|---|
| Subpart A ..... | Applicability and general provisions. |
| Subpart B ..... | Equipment for testing. |
| Subpart C ..... | Measurement instruments for testing. |
| Subpart D ..... | Calibration and performance verifications for measurement systems. |
| Subpart E ..... | How to prepare engines for testing, including service accumulation. |
| Subpart F ..... | How to run an emission test. |
| Subpart G ..... | Test procedure calculations. |
| Subpart H ..... | Fuels, engine fluids, analytical gases, and other calibration standards for testing. |
| Subpart I ..... | Special procedures related to oxygenated fuels. |
| Subpart J ..... | How to test with portable emission measurement systems (PEMS). |
| Subpart K ..... | Definitions, abbreviations, and other reference information. |

**§ 1065.10 Other procedures.**

(a) *Your testing.* The procedures in this part apply for all testing you do to show compliance with emission standards, with certain exceptions listed in this section. In some other sections in this part, we allow you to use other procedures (such as less precise or less accurate procedures) if they do not affect your ability to show that your engines comply with the applicable emission standards. This generally requires emission levels to be far enough below the applicable emission standards so that any errors caused by greater imprecision or inaccuracy do not affect your ability to state unconditionally that the engines meet all applicable emission standards.

(b) *Our testing.* These procedures generally apply for testing that we do to determine if your engines comply with applicable emission standards. We may perform other testing as allowed by the Act.

(c) *Exceptions.* We may allow or require you to use procedures other than those specified in this part in the following cases, which may apply to laboratory testing, field testing, or both. We intend to publicly announce when we allow or require such exceptions. All of the test procedures noted here as exceptions to the specified procedures are considered generically as ''other procedures.'' Note that the terms ''special procedures'' and ''alternate procedures'' have specific meanings; ''special procedures'' are those allowed by § 1065.10(c)(2) and ''alternate procedures'' are those allowed by § 1065.10(c)(7).

(1) The objective of the procedures in this part is to produce emission measurements equivalent to those that would result from measuring emissions during in-use operation using the same engine configuration as installed in a vehicle. However, in unusual circumstances these procedures may result in measurements that do not represent in-use operation. You must notify us if good engineering judgment indicates that the specified procedures cause unrepresentative emission measurements for your engines. Note that you need not notify us of unrepresentative aspects of the test procedure if measured emissions are equivalent to in-use emissions. This provision does not obligate you to pursue new information regarding the different ways your engine might operate in use, nor does it obligate you to collect any other in-use information to verify whether or not these test procedures are representative of your engine's in-use operation. If you notify us of unrepresentative procedures under this paragraph (c)(1), we will cooperate with you to establish whether and how the procedures should be appropriately changed to result in more representative measurements. While the provisions of this paragraph (c)(1) allow us to be responsive to issues as they arise, we would generally work toward making these testing changes generally applicable through rulemaking. We will allow reasonable lead time for compliance with any resulting change in procedures. We will consider the following factors in determining the importance of pursuing changes to the procedures:

(i) Whether supplemental emission standards or other requirements in the standard-setting part address the type of operation of concern or otherwise prevent inappropriate design strategies.

(ii) Whether the unrepresentative aspect of the procedures affect your ability to show compliance with the applicable emission standards.

(iii) The extent to which the established procedures require the use of emission-control technologies or strategies that are expected to ensure a comparable degree of emission control under the in-use operation that differs from the specified procedures.

(2) You may request to use special procedures if your engine cannot be tested using the specified procedures. We will approve your request if we determine that it would produce emission measurements that represent in-use operation and we determine that it can be used to show compliance with the requirements of the standard-setting part.

The following situations illustrate examples that may require special procedures:

(i) Your engine cannot operate on the specified duty cycle. In this case, tell us in writing why you cannot satisfactorily test your engine using this part's procedures and ask to use a different approach.

(ii) Your electronic control module requires specific input signals that are not available during dynamometer testing. In this case, tell us in writing what signals you will simulate, such as vehicle speed or transmission signals, and explain why these signals are necessary for representative testing.

(3) In a given model year, you may use procedures required for later model year engines without request. If you upgrade your testing facility in stages, you may rely on a combination of procedures for current and later model year engines as long as you can ensure, using good engineering judgment, that the combination you use for testing does not affect your ability to show compliance with the applicable emission standards.

(4) In a given model year, you may ask to use procedures allowed for earlier model year engines. We will approve this only if you show us that using the procedures allowed for earlier model years does not affect your ability to show compliance with the applicable emission standards.

(5) You may ask to use emission data collected using other procedures, such as those of the California Air Resources Board or the International Organization for Standardization. We will approve this only if you show us that using these other procedures does not affect your ability to show compliance with the applicable emission standards.

(6) During the 12 months following the effective date of any change in the provisions of this part 1065, you may ask to use data collected using procedures specified in the previously applicable version of this part 1065. This paragraph (c)(6) does not restrict the use of carryover certification data otherwise allowed by the standard-setting part.

(7) You may request to use alternate procedures that are equivalent to allowed procedures, or more accurate or more precise than allowed procedures. You may request to use a particular device or method for laboratory testing even though it was originally designed for field testing. The following provisions apply to requests for alternate procedures:

(i) *Applications.* Follow the instructions in § 1065.12.

(ii) *Submission.* Submit requests in writing to the Designated Compliance Officer.

(iii) *Notification.* We may approve your request by telling you directly, or we may issue guidance announcing our approval of a specific alternate procedure, which would make additional requests for approval unnecessary.

(d) If we require you to request approval to use other procedures under paragraph (c) of this section, you may not use them until we approve your request.

**§ 1065.12 Approval of alternate procedures.**

(a) To get approval for an alternate procedure under § 1065.10(c), send the Designated Compliance Officer an initial written request describing the alternate procedure and why you believe it is equivalent to the specified procedure. We may approve your request based on this information alone, or, as described in this section, we may ask you to submit to us in writing supplemental information showing that your alternate procedure is consistently and reliably at least as accurate and repeatable as the specified procedure.

(b) We may make our approval under this section conditional upon meeting other requirements or specifications. We may limit our approval, for example, to certain time frames, specific duty cycles, or specific emission standards. Based upon any supplemental information we receive after our initial approval, we may amend a previously approved alternate procedure to extend, limit, or discontinue its use. We intend to publicly announce alternate procedures that we approve.

(c) Although we will make every effort to approve only alternate procedures that completely meet our requirements, we may revoke our approval of an alternate procedure if new information shows that it is significantly not equivalent to the specified procedure.

If we do this, we will grant time to switch to testing using an allowed procedure, considering the following factors:

(1) The cost, difficulty, and availability to switch to a procedure that we allow.

(2) The degree to which the alternate procedure affects your ability to show that your engines comply with all applicable emission standards.

(3) Any relevant factors considered in our initial approval.

(d) If we do not approve your proposed alternate procedure based on the information in your initial request, we may ask you to send the following information to fully evaluate your request:

(1) *Theoretical basis.* Give a brief technical description explaining why you believe the proposed alternate procedure should result in emission measurements equivalent to those using the specified procedure. You may include equations, figures, and references. You should consider the full range of parameters that may affect equivalence. For example, for a request to use a different $NO_X$ measurement procedure, you should theoretically relate the alternate detection principle to the specified detection principle over the expected concentration ranges for NO, $NO_2$, and interference gases. For a request to use a different PM measurement procedure, you should explain the principles by which the alternate procedure quantifies particulate mass similarly to the specified procedures. For any proportioning or integrating procedure, such as a partial-flow dilution system, you should compare the alternate procedure's theoretical response to the expected response of the specified procedures.

(2) *Technical description.* Describe briefly any hardware or software needed to perform the alternate procedure. You may include dimensioned drawings, flowcharts, schematics, and component specifications. Explain any necessary calculations or other data manipulation.

(3) *Procedure execution.* Describe briefly how to perform the alternate procedure and recommend a level of training an operator should have to achieve acceptable results.

Summarize the installation, calibration, operation, and maintenance procedures in a step-by-step format. Describe how any calibration is performed using NIST-traceable standards or other similar standards we approve. Calibration must be specified by using known quantities and must not be specified as a comparison with other allowed procedures.

(4) *Data-collection techniques.* Compare measured emission results using the proposed alternate procedure and the specified procedure, as follows:

(i) Both procedures must be calibrated independently to NIST-traceable standards or to other similar standards we approve.

(ii) Include measured emission results from all applicable duty cycles. Measured emission results should show that the test engine meets all applicable emission standards according to specified procedures.

(iii) Use statistical methods to evaluate the emission measurements,

such as those described in paragraph (e) of this section.

(e) We may give you specific directions regarding methods for statistical analysis, or we may approve other methods that you propose. Absent any other directions from us, use a t-test and an F-test calculated according to § 1065.602 to evaluate whether your proposed alternate procedure is equivalent to the specified procedure. We recommend that you consult a statistician if you are unfamiliar with these statistical tests. Perform the tests as follows:

(1) Repeat measurements for all applicable duty cycles at least seven times for each procedure. You may use laboratory duty cycles to evaluate field-testing procedures.

Be sure to include all available results to evaluate the precision and accuracy of the proposed alternate procedure, as described in § 1065.2.

(2) Demonstrate the accuracy of the proposed alternate procedure by showing that it passes a two-sided t-test. Use an unpaired t-test, unless you show that a paired t-test is appropriate under both of the following provisions:

(i) For paired data, the population of the paired differences from which you sampled paired differences must be independent. That is, the probability of any given value of one paired difference is unchanged by knowledge of the value of another paired difference. For example, your paired data would violate this requirement if your series of paired differences showed a distinct increase or decrease that was dependent on the time at which they were sampled.

(ii) For paired data, the population of paired differences from which you sampled the paired differences must have a normal (i.e., Gaussian) distribution. If the population of paired difference is not normally distributed, consult a statistician for a more appropriate statistical test, which may include transforming the data with a mathematical function or using some kind of non-parametric test.

(3) Show that t is less than the critical t value, $t_{crit}$, tabulated in § 1065.602, for the following confidence intervals:

(i) 90% for a proposed alternate procedure for laboratory testing.

(ii) 95% for a proposed alternate procedure for field testing.

(4) Demonstrate the precision of the proposed alternate procedure by showing that it passes an F-test. Use a set of at least seven samples from the reference procedure and a set of at least seven samples from the alternate procedure to perform an F-test. The sets must meet the following requirements:

(i) Within each set, the values must be independent. That is, the probability of any given value in a set must be unchanged by knowledge of another value in that set. For example, your data would violate this requirement if a set showed a distinct increase or decrease that was dependent upon the time at which they were sampled.

(ii) For each set, the population of values from which you sampled must have a normal (i.e., Gaussian) distribution. If the population of values is not normally distributed, consult a statistician for a more appropriate statistical test, which may include transforming the data with a mathematical function or using some kind of non-parametric test.

(iii) The two sets must be independent of each other. That is, the probability of any given value in one set must be unchanged by knowledge of another value in the other set. For example, your data would violate this requirement if one value in a set showed a distinct increase or decrease that was dependent upon a value in the other set. Note that a trend of emission changes from an engine would not violate this requirement.

(iv) If you collect paired data for the paired t-test in paragraph (e)(2) in this section, use caution when selecting sets from paired data for the F-test. If you do this, select sets that do not mask the precision of the measurement procedure. We recommend selecting such sets only from data collected using the same engine, measurement instruments, and test cycle.

(5) Show that F is less than the critical F value, $F_{crit}$, tabulated in § 1065.602. If you have several F-test results from several sets of data, show that the mean F-test value is less than the mean critical F value for all the sets. Evaluate $F_{crit}$, based on the following confidence intervals:

(i) 90% for a proposed alternate procedure for laboratory testing.

(ii) 95% for a proposed alternate procedure for field testing.

### § 1065.15 Overview of procedures for laboratory and field testing.

This section outlines the procedures to test engines that are subject to emission standards.

(a) In the standard-setting part, we set brake-specific emission standards in g/(kW·hr) (or g/(hp·hr)), for the following constituents:

(1) Total oxides of nitrogen, $NO_X$.

(2) Hydrocarbons (HC), which may be expressed in the following ways:

(i) Total hydrocarbons, THC.

(ii) Nonmethane hydrocarbons, NMHC, which results from subtracting methane ($CH_4$) from THC.

(iii) Total hydrocarbon-equivalent, THCE, which results from adjusting THC mathematically to be equivalent on a carbon-mass basis.

(iv) Nonmethane hydrocarbon-equivalent, NMHCE, which results from adjusting NMHC mathematically to be equivalent on a carbon-mass basis.

(3) Particulate mass, PM.

(4) Carbon monoxide, CO.

(b) Note that some engines are not subject to standards for all the emission constituents identified in paragraph (a) of this section.

(c) We set brake-specific emission standards over test intervals, as follows:

(1) *Engine operation.* Engine operation is specified over a test interval. A test interval is the time over which an engine's total mass of emissions and its total work are determined. Refer to the standard-setting part for the specific test intervals that apply to each engine. Testing may involve measuring emissions and work during the following types of engine operation:

(i) *Laboratory testing.* Under this type of testing, you determine brake-specific emissions for duty-cycle testing by using an engine dynamometer in a laboratory. This typically consists of one or more test intervals, each defined by a duty cycle, which is a sequence of speeds and torques that an engine must follow. If the standard-setting part allows it, you may also simulate field testing by running on an engine dynamometer in a laboratory.

(ii) *Field testing.* This type of testing consists of normal in-use engine operation while an engine is installed in a vehicle. The standard-setting part specifies how test intervals are defined for field testing.

(2) *Constituent determination.* Determine the total mass of each constituent over a test interval by selecting from the following methods:

(i) *Continuous sampling.* In continuous sampling, measure the constituent's concentration continuously from raw or dilute exhaust. Multiply this concentration by the continuous (raw or dilute) flow rate at the emission sampling location to determine the constituent's flow rate. Sum the constituent's flow rate continuously over the test interval. This sum is the total mass of the emitted constituent.

(ii) *Batch sampling.* In batch sampling, continuously extract and store a sample of raw or dilute exhaust for later measurement. Extract a sample proportional to the raw or dilute exhaust flow rate. You may extract and store a proportional sample of exhaust in an appropriate container, such as a

bag, and then measure HC, CO, and $NO_X$ concentrations in the container after the test interval. You may deposit PM from proportionally extracted exhaust onto an appropriate substrate, such as a filter. In this case, divide the PM by the amount of filtered exhaust to calculate the PM concentration. Multiply batch sampled concentrations by the total (raw or dilute) flow from which it was extracted during the test interval. This product is the total mass of the emitted constituent.

(iii) *Combined sampling.* You may use continuous and batch sampling simultaneously during a test interval, as follows:

(A) You may use continuous sampling for some constituents and batch sampling for others.

(B) You may use continuous and batch sampling for a single constituent, with one being a redundant measurement. See § 1065.201 for more information on redundant measurements.

(3) *Work determination.* Determine work over a test interval by one of the following methods:

(i) *Speed and torque.* For laboratory testing, synchronously multiply speed and brake torque to calculate instantaneous values for engine brake power. Sum engine brake power over a test interval to determine total work.

(ii) *Fuel consumed and brake-specific fuel consumption.* Directly measure fuel consumed or calculate it with chemical balances of the fuel, intake air, and exhaust. To calculate fuel consumed by a chemical balance, you must also measure either intake-air flow rate or exhaust flow rate. Divide the fuel consumed during a test interval by the brake-specific fuel consumption to determine work over the test interval. For laboratory testing, calculate the brake-specific fuel consumption using fuel consumed and speed and torque over a test interval. For field testing, refer to the standard-setting part and § 1065.915 for selecting an appropriate value for brake-specific fuel consumption.

(d) Refer to § 1065.650 for calculations to determine brake-specific emissions.

(e) The following figure illustrates the allowed measurement configurations described in this part 1065:

BILLING CODE 6560–50–P

Figure 1 of §1065.15—Default test procedures and other specified procedures.

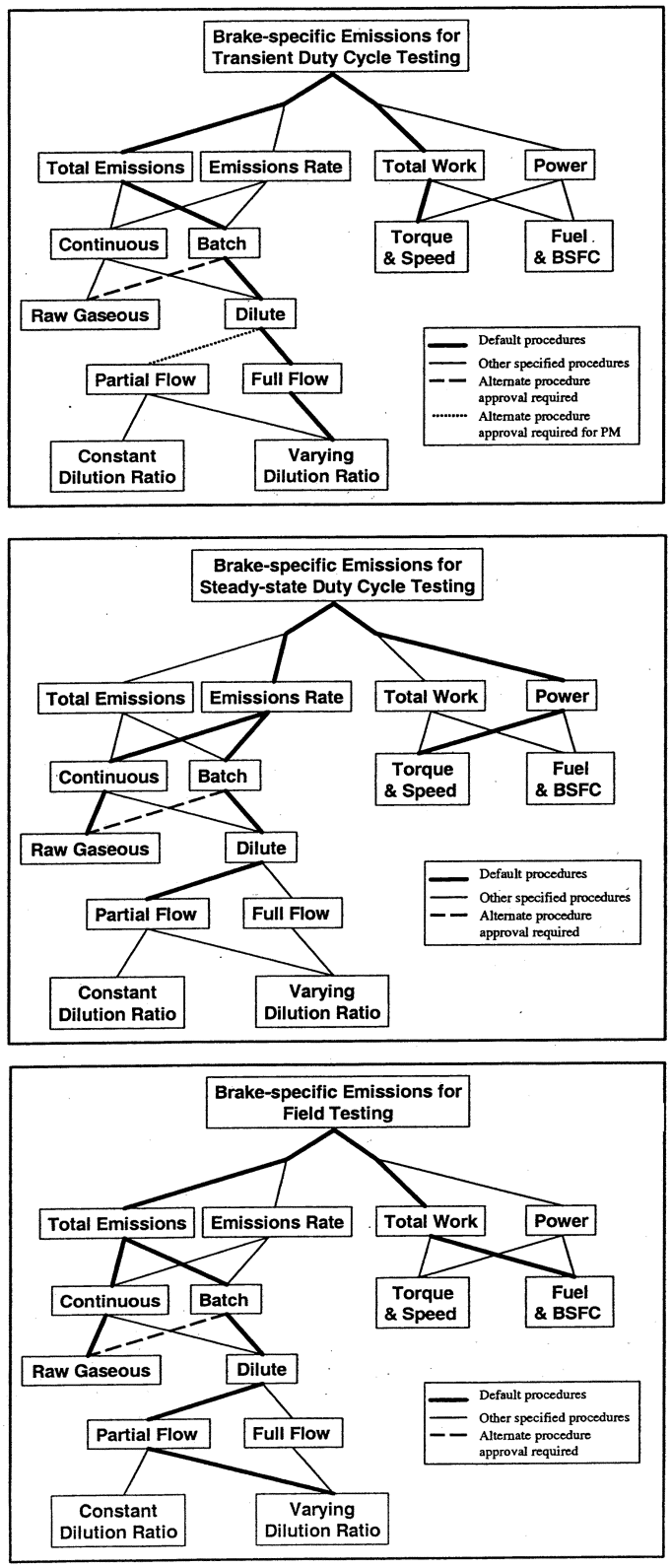

**§ 1065.20 Units of measure and overview of calculations.**

(a) *System of units*. The procedures in this part generally follow the International System of Units (SI), as detailed in NIST Special Publication 811, 1995 Edition, ''Guide for the Use of the International System of Units (SI),'' which we incorporate by reference in § 1065.1010. This document is available on the Internet at *http://physics.nist.gov/Pubs/SP811/contents.html*. Note the following exceptions:

(1) We designate rotational frequency, $f_n$, of an engine's crankshaft in revolutions per minute (rev/min), rather than the SI unit of reciprocal seconds (1/s). This is based on the commonplace use of rev/min in many engine dynamometer laboratories. Also, we use the symbol $f_n$ to identify rotational frequency in rev/min, rather than the SI convention of using n. This avoids confusion with our usage of the symbol n for a molar quantity.

(2) We designate brake-specific emissions in grams per kilowatt-hour (g/(kW·hr)), rather than the SI unit of grams per megajoule (g/MJ). This is based on the fact that engines are generally subject to emission standards expressed in g/kW·hr. If we specify engine standards in grams per horsepower·hour (g/(hp·hr)) in the standard-setting part, convert units as specified in paragraph (d) of this section.

(3) We designate temperatures in units of degrees Celsius (°C) unless a calculation requires an absolute temperature. In that case, we designate temperatures in units of Kelvin (K). For conversion purposes throughout this part, 0 °C equals 273.15 K.

(b) *Concentrations*. This part does not rely on amounts expressed in parts per million or similar units. Rather, we express such amounts in the following SI units:

(1) For ideal gases, μmol/mol, formerly ppm (volume).

(2) For all substances, $\mu m^3/m^3$, formerly ppm (volume).

(3) For all substances, mg/kg, formerly ppm (mass).

(c) *Absolute pressure*. Measure absolute pressure directly or calculate it as the sum of atmospheric pressure plus a differential pressure that is referenced to atmospheric pressure.

(d) *Units conversion*. Use the following conventions to convert units:

(1) *Testing*. You may record values and perform calculations with other units. For testing with equipment that involves other units, use the conversion factors from NIST Special Publication 811, as described in paragraph (a) of this section.

(2) *Humidity*. In this part, we identify humidity levels by specifying dewpoint, which is the temperature at which pure water begins to condense out of air. Use humidity conversions as described in § 1065.645.

(3) *Emission standards*. If your standard is in g/(hp·hr) units, convert kW to hp before any rounding by using the conversion factor of 1 hp (550 ft·lbf/s) = 0.7456999 kW. Round the final value for comparison to the applicable standard.

(e) *Rounding*. Unless the standard-setting part specifies otherwise, round only final values, not intermediate values. Round values to the number of significant digits necessary to match the number of decimal places of the applicable standard or specification. For information not related to standards or specifications, use good engineering judgment to record the appropriate number of significant digits.

(f) *Interpretation of ranges*. In this part, we specify ranges such as ''±10% of maximum pressure'', ''(40 to 50) kPa'', or ''(30 ±10) kPa''. Interpret a range as a tolerance unless we explicitly identify it as an accuracy, repeatability, linearity, or noise specification. See § 1065.1001 for the definition of Tolerance.

(g) *Scaling of specifications with respect to a standard*. Because this part 1065 is applicable to a wide range of engines and emission standards, some of the specifications in this part are scaled with respect to an engine's emission standard or maximum power. This ensures that the specification will be adequate to determine compliance, but not overly burdensome by requiring unnecessarily high-precision equipment. Many of these specifications are given with respect to a ''flow-weighted mean'' that is expected at the standard. Flow-weighted mean is the mean of a quantity after it is weighted proportional to a corresponding flow rate. For example, if a gas concentration is measured continuously from the raw exhaust of an engine, its flow-weighted mean concentration is the sum of the products of each recorded concentration times its respective exhaust flow rate, divided by the sum of the recorded flow rates. As another example, the bag concentration from a CVS system is the same as the flow-weighted mean concentration, because the CVS system itself flow-weights the bag concentration. Refer to § 1065.602 for information needed to estimate and calculate flow-weighted means.

**§ 1065.25 Recordkeeping.**

The procedures in this part include various requirements to record data or other information. Refer to the standard-setting part regarding recordkeeping requirements. If the standard-setting part does not specify recordkeeping requirements, store these records in any format and on any media and keep them readily available for one year after you send an associated application for certification, or one year after you generate the data if they do not support an application for certification. You must promptly send us organized, written records in English if we ask for them. We may review them at any time.

## Subpart B—Equipment Specifications

**§ 1065.101 Overview.**

(a) This subpart specifies equipment, other than measurement instruments, related to emission testing. The provisions of this subpart apply for all testing in laboratories. See subpart J of this part to determine which of the provisions of this subpart apply for field testing. This includes three broad categories of equipment—dynamometers, engine fluid systems (such as fuel and intake-air systems), and emission-sampling hardware.

(b) Other related subparts in this part identify measurement instruments (subpart C), describe how to evaluate the performance of these instruments (subpart D), and specify engine fluids and analytical gases (subpart H).

(c) Subpart J of this part describes additional equipment that is specific to field testing.

(d) Figures 1 and 2 of this section illustrate some of the possible configurations of laboratory equipment. These figures are schematics only; we do not require exact conformance to them. Figure 1 of this section illustrates the equipment specified in this subpart and gives some references to sections in this subpart. Figure 2 of this section illustrates some of the possible configurations of a full-flow dilution, constant-volume sampling (CVS) system. Not all possible CVS configurations are shown.

BILLING CODE 6560–50–P

Figure 1 of §1065.101—Engine dynamometer laboratory equipment.

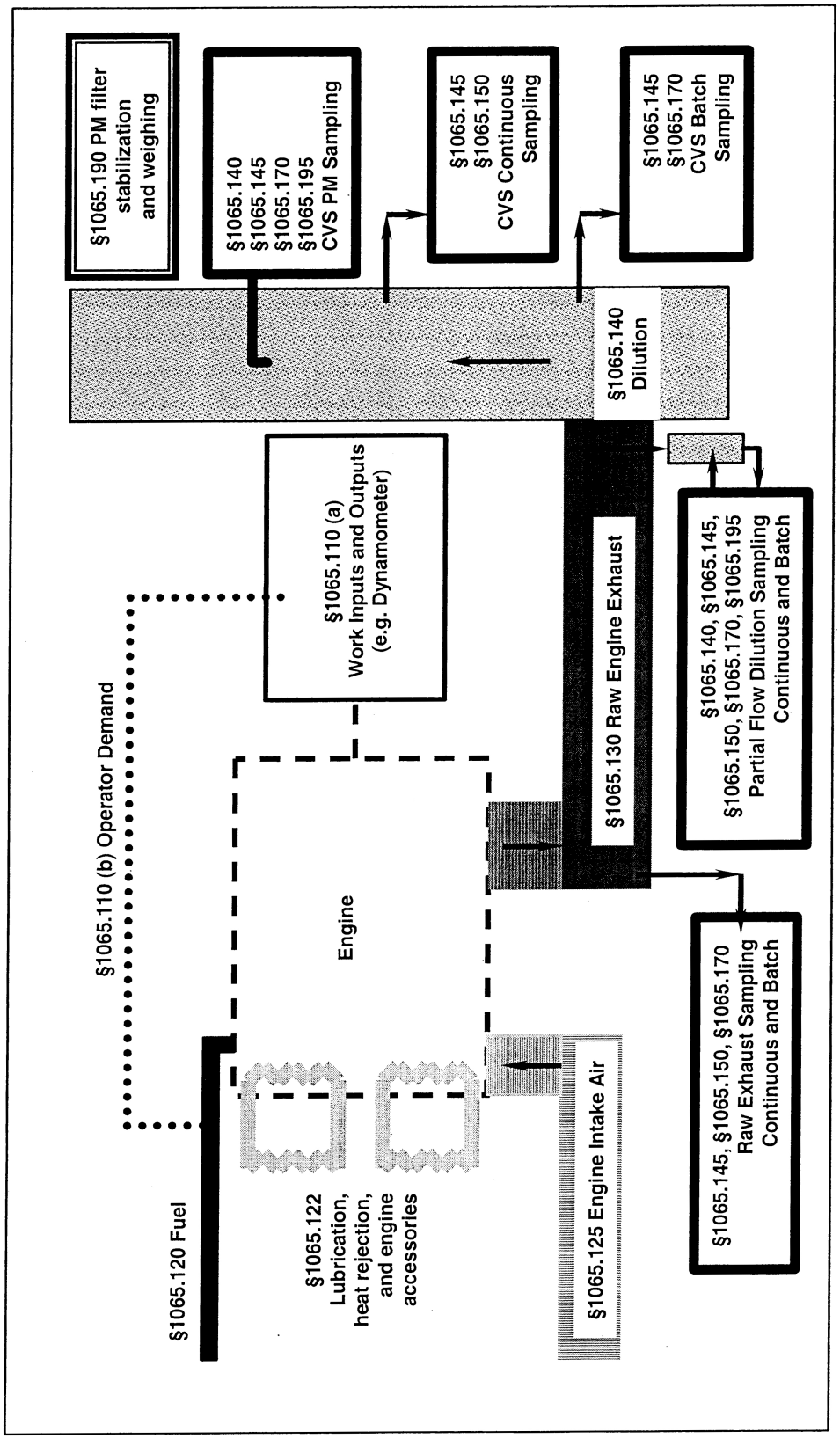

Figure 2 of §1065.101—Examples of some full-flow dilution sampling configurations.

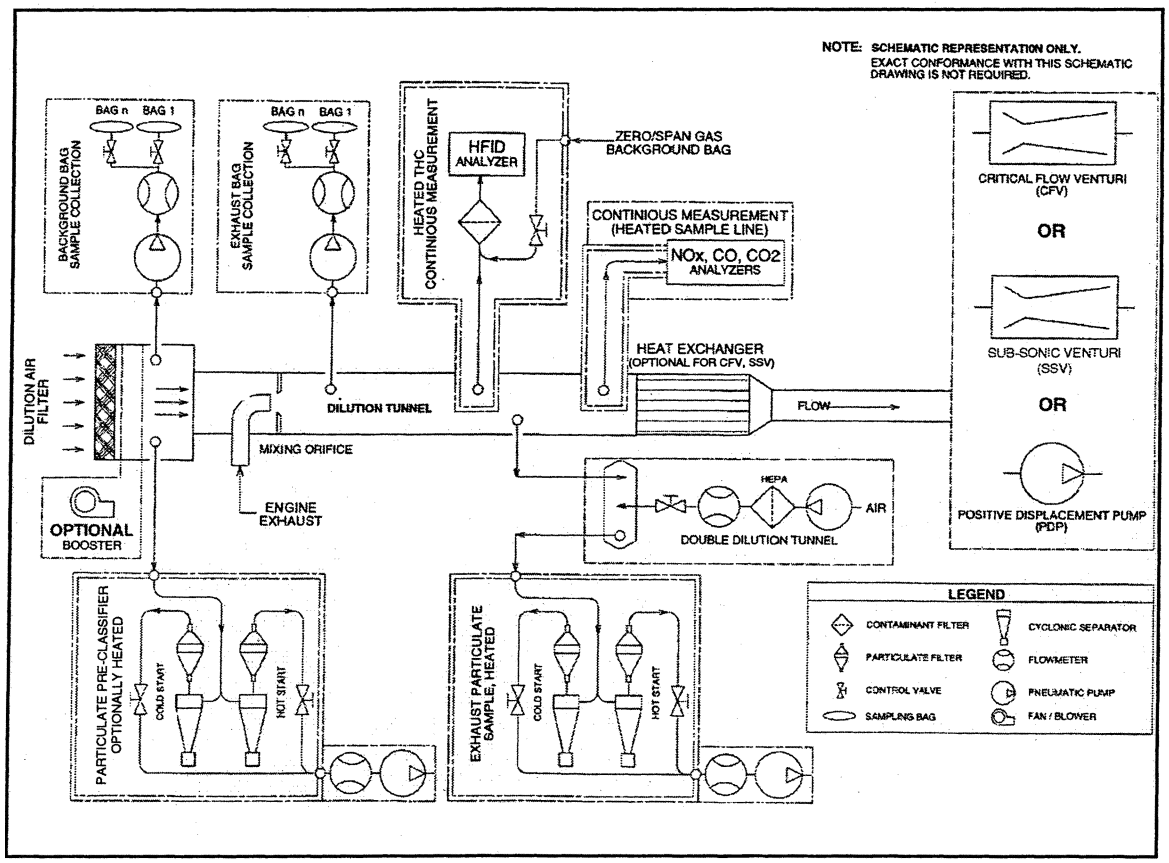


BILLING CODE 6560–50–C

**§ 1065.110 Work inputs and outputs, accessory work, and operator demand.**

(a) *Work.* Use good engineering judgment to simulate all engine work inputs and outputs as they typically would operate in use. Account for work inputs and outputs during an emission test by measuring them; or, if they are small, you may show by engineering analysis that disregarding them does not affect your ability to determine the net work output by more than ±0.5% of the net reference work output over the test interval. Use equipment to simulate the specific types of work, as follows:

(1) *Shaft work.* Use an engine dynamometer that is able to meet the cycle-validation criteria in § 1065.514 over each applicable duty cycle.

(i) You may use eddy-current and water-brake dynamometers for any testing that does not involve engine motoring, which is identified by negative torque commands in a reference duty cycle. See the standard setting part for reference duty cycles that are applicable to your engine.

(ii) You may use alternating-current or direct-current motoring dynamometers for any type of testing.

(iii) You may use one or more dynamometers.

(2) *Electrical work.* Use one or more of the following to simulate electrical work:

(i) Use storage batteries or capacitors that are of the type and capacity installed in use.

(ii) Use motors, generators, and alternators that are of the type and capacity installed in use.

(iii) Use a resistor load bank to simulate electrical loads.

(3) *Pump, compressor, and turbine work.* Use pumps, compressors, and turbines that are of the type and capacity installed in use. Use working fluids that are of the same type and thermodynamic state as normal in-use operation.

(b) *Laboratory work inputs.* You may supply any laboratory inputs of work to the engine. For example, you may supply electrical work to the engine to operate a fuel system, and as another example you may supply compressor work to the engine to actuate pneumatic valves. We may ask you to show by engineering analysis your accounting of laboratory work inputs to meet the criterion in paragraph (a) of this section.

(c) *Engine accessories.* You must either install or account for the work of engine accessories required to fuel, lubricate, or heat the engine, circulate coolant to the engine, or to operate aftertreatment devices. Operate the engine with these accessories installed or accounted for during all testing operations, including mapping. If these accessories are not powered by the engine during a test, account for the work required to perform these functions from the total work used in brake-specific emission calculations. For air-cooled engines only, subtract externally powered fan work from total work. We may ask you to show by engineering analysis your accounting of engine accessories to meet the criterion in paragraph (a) of this section.

(d) *Engine starter.* You may install a production-type starter.

(e) *Operator demand for shaft work.* Command the operator demand and the dynamometer(s) to follow the prescribed duty cycle with set points for engine

speed and torque at 5 Hz (or more frequently) for transient testing or 1 Hz (or more frequently) for steady-state testing. Use a mechanical or electronic input to control operator demand such that the engine is able to meet the validation criteria in § 1065.514 over each applicable duty cycle. Record feedback values for engine speed and torque at 5 Hz or more frequently for evaluating performance relative to the cycle validation criteria. Using good engineering judgment, you may improve control of operator demand by altering on-engine speed and torque controls. However, if these changes result in unrepresentative testing, you must notify us and recommend other test procedures under § 1065.10(c)(1).

**§ 1065.120 Fuel properties and fuel temperature and pressure.**

(a) Use fuels as specified in subpart H of this part.

(b) If the engine manufacturer specifies fuel temperature and pressure tolerances and the location where they are to be measured, then measure the fuel temperature and pressure at the specified location to show that you are within these tolerances throughout testing.

(c) If the engine manufacturer does not specify fuel temperature and pressure tolerances, use good engineering judgment to set and control fuel temperature and pressure in a way that represents typical in-use fuel temperatures and pressures.

**§ 1065.122 Engine cooling and lubrication.**

(a) *Engine cooling.* Cool the engine during testing so its intake-air, oil, coolant, block, and head temperatures are within their expected ranges for normal operation. You may use laboratory auxiliary coolers and fans.

(1) If you use laboratory auxiliary fans you must account for work input to the fan(s) according to § 1065.110.

(2) See § 1065.125 for more information related to intake-air cooling.

(3) See § 1065.127 for more information related to exhaust gas recirculation cooling.

(4) Measure temperatures at the manufacturer-specified locations. If the manufacturer does not specify temperature measurement locations, then use good engineering judgment to monitor intake-air, oil, coolant, block, and head temperatures to ensure that they are in their expected ranges for normal operation.

(b) *Forced cooldown.* You may install a forced cooldown system for an engine and an exhaust aftertreatment device according to § 1065.530(a)(1).

(c) *Lubricating oil.* Use lubricating oils specified in § 1065.740.

(d) *Coolant.* For liquid-cooled engines, use coolant as specified in § 1065.745.

**§ 1065.125 Engine intake air.**

(a) Use the intake-air system installed on the engine or one that represents a typical in-use configuration. This includes the charge-air cooling and exhaust gas recirculation systems.

(b) Measure temperature, humidity, and atmospheric pressure near the entrance to the engine's air filter, or at the inlet to the air intake system for engines that have no air filter. You may use a shared atmospheric pressure meter as long as your equipment for handling intake air maintains ambient pressure where you test the engine within ±1 kPa of the shared atmospheric pressure. You may use a shared humidity measurement for intake air as long as your equipment for handling intake air maintains dewpoint where you test the engine to within +0.5 °C of the shared humidity measurement.

(c) Use an air-intake restriction that represents production engines. Make sure the intake-air restriction is between the manufacturer's specified maximum for a clean filter and the manufacturer's specified maximum allowed. Measure the static differential pressure of the restriction at the location and at the speed and torque set points specified by the manufacturer. If the manufacturer does not specify a location, measure this pressure upstream any turbocharger or exhaust gas recirculation system connection to the intake air system. If the manufacturer does not specify speed and torque points, measure this pressure while the engine outputs maximum power. As the manufacturer, you are liable for emission compliance for all values up to the maximum restriction you specify for a particular engine.

(d) This paragraph (d) includes provisions for simulating charge-air cooling in the laboratory. This approach is described in paragraph (d)(1) of this section. Limits on using this approach are described in paragraphs (d)(2) and (3) of this section.

(1) Use a charge-air cooling system with a total intake-air capacity that represents production engines' in-use installation. Maintain coolant conditions as follows:

(i) Maintain a coolant temperature of at least 20 °C at the inlet to the charge-air cooler throughout testing.

(ii) At maximum engine power, set the coolant flow rate to achieve an air temperature within ±5 °C of the value specified by the manufacturer at the charge-air cooler outlet. Measure the air-outlet temperature at the location specified by the manufacturer. Use this coolant flow rate set point throughout testing.

(2) Using a constant flow rate as described in paragraph (d)(1)(ii) of this section may result in unrepresentative overcooling of the intake air. If this causes any regulated emission to decrease, then you may still use this approach, but only if the effect on emissions is smaller than the degree to which you meet the applicable emission standards. If the effect on emissions is larger than the degree to which you meet the applicable emission standards, you must use a variable flow rate that controls intake-air temperatures to be representative of in-use operation.

(3) This approach does not apply for field testing. You may not correct measured emission levels from field testing to account for any differences caused by the simulated cooling in the laboratory.

**§ 1065.127 Exhaust gas recirculation.**

Use the exhaust gas recirculation (EGR) system installed with the engine or one that represents a typical in-use configuration. This includes any applicable EGR cooling devices.

**§ 1065.130 Engine exhaust.**

(a) *General.* Use the exhaust system installed with the engine or one that represents a typical in-use configuration. This includes any applicable aftertreatment devices.

(b) *Aftertreatment configuration.* If you do not use the exhaust system installed with the engine, configure any aftertreatment devices as follows:

(1) Position any aftertreatment device so its distance from the nearest exhaust manifold flange or turbocharger outlet is within the range specified by the engine manufacturer in the application for certification. If this distance is not specified, position aftertreatment devices to represent typical in-use vehicle configurations.

(2) You may use laboratory exhaust tubing upstream of any aftertreatment device that is of diameter(s) typical of in-use configurations. If you use laboratory exhaust tubing upstream of any aftertreatment device, position each aftertreatment device according to paragraph (b)(1) of this section.

(c) *Sampling system connections.* Connect an engine's exhaust system to any raw sampling location or dilution stage, as follows:

(1) Minimize laboratory exhaust tubing lengths and use a total length of laboratory tubing of no more than 10 m or 50 outside diameters, whichever is greater. If laboratory exhaust tubing consists of several different outside tubing diameters, count the number of

diameters of length of each individual diameter, then sum all the diameters to determine the total length of exhaust tubing in diameters. Use the mean outside diameter of any converging or diverging sections of tubing. Use outside hydraulic diameters of any noncircular sections.

(2) You may install short sections of flexible laboratory exhaust tubing at any location in the engine or laboratory exhaust systems. You may use up to a combined total of 2 m or 10 outside diameters of flexible exhaust tubing.

(3) Insulate any laboratory exhaust tubing downstream of the first 25 outside diameters of length.

(4) Use laboratory exhaust tubing materials that are smooth-walled, electrically conductive, and not reactive with exhaust constituents. Stainless steel is an acceptable material.

(5) We recommend that you use laboratory exhaust tubing that has either a wall thickness of less than 2 mm or is air gap-insulated to minimize temperature differences between the wall and the exhaust.

(d) *In-line instruments.* You may insert instruments into the laboratory exhaust tubing, such as an in-line smoke meter. If you do this, you may leave a length of up to 5 outside diameters of laboratory exhaust tubing uninsulated on each side of each instrument, but you must leave a length of no more than 25 outside diameters of laboratory exhaust tubing uninsulated in total, including any lengths adjacent to in-line instruments.

(e) *Grounding.* Electrically ground the entire exhaust system.

(f) *Forced cooldown.* You may install a forced cooldown system for an exhaust aftertreatment device according to § 1065.530(a)(1)(i).

(g) *Exhaust restriction.* Use an exhaust restriction that represents the performance of production engines. Make sure the exhaust restriction set point is either (80 to 100) % of the maximum exhaust restriction specified by the manufacturer; or if the maximum is 5 kPa or less, make sure the set point is no less than 1.0 kPa from the maximum. For example, if the maximum back pressure is 4.5 kPa, do not use an exhaust restriction set point that is less than 3.5 kPa. Measure and set this pressure at the location and at the speed, torque and aftertreatment set points specified by the manufacturer. As the manufacturer, you are liable for emission compliance for all values up to the maximum restriction you specify for a particular engine.

(h) *Open crankcase emissions.* If the standard-setting part requires measuring open crankcase emissions, you may either measure open crankcase emissions separately using a method that we approve in advance, or route open crankcase emissions directly into the exhaust system for emission measurement as follows:

(1) Use laboratory tubing materials that are smooth-walled, electrically conductive, and not reactive with crankcase emissions. Stainless steel is an acceptable material.

Minimize tube lengths. We also recommend using heated or thin-walled or air gap-insulated tubing to minimize temperature differences between the wall and the crankcase emission constituents.

(2) Minimize the number of bends in the laboratory crankcase tubing and maximize the radius of any unavoidable bend.

(3) Use laboratory crankcase exhaust tubing that meets the engine manufacturer's specifications for crankcase back pressure.

(4) Connect the crankcase exhaust tubing into the raw exhaust downstream of any aftertreatment system, downstream of any installed exhaust restriction, and sufficiently upstream of any sample probes to ensure complete mixing with the engine's exhaust before sampling. Extend the crankcase exhaust tube into the free stream of exhaust to avoid boundary-layer effects and to promote mixing. You may orient the crankcase exhaust tube's outlet in any direction relative to the raw exhaust flow.

**§ 1065.140 Dilution for gaseous and PM constituents.**

(a) *General.* You may dilute exhaust with ambient air, synthetic air, or nitrogen that is at least 15 °C. Note that the composition of the diluent affects some gaseous emission measurement instruments' response to emissions. We recommend diluting exhaust at a location as close as possible to the location where ambient air dilution would occur in use.

(b) *Dilution-air conditions and background concentrations.* Before a diluent is mixed with exhaust, you may precondition it by increasing or decreasing its temperature or humidity. You may also remove constituents to reduce their background concentrations.The following provisions apply to removing constituents or accounting for background concentrations:

(1) You may measure constituent concentrations in the diluent and compensate for background effects on test results. See § 1065.650 for calculations that compensate for background concentrations.

(2) Either measure these background concentrations the same way you measure diluted exhaust constituents, or measure them in a way that does not affect your ability to demonstrate compliance with the applicable standards. For example, you may use the following simplifications for background sampling:

(i) You may disregard any proportional sampling requirements.

(ii) You may use unheated gaseous sampling systems.

(iii) You may use unheated PM sampling systems only if we approve it in advance.

(iv) You may use continuous sampling if you use batch sampling for diluted emissions.

(v) You may use batch sampling if you use continuous sampling for diluted emissions.

(3) For removing background PM, we recommend that you filter all dilution air, including primary full-flow dilution air, with high-efficiency particulate air (HEPA) filters that have an initial minimum collection efficiency specification of 99.97% (see § 1065.1001 for procedures related to HEPA-filtration efficiencies). Ensure that HEPA filters are installed properly so that background PM does not leak past the HEPA filters. If you choose to correct for background PM without using HEPA filtration, demonstrate that the background PM in the dilution air contributes less than 50% to the net PM collected on the sample filter.

(c) *Full-flow dilution; constant-volume sampling (CVS).* You may dilute the full flow of raw exhaust in a dilution tunnel that maintains a nominally constant volume flow rate, molar flow rate or mass flow rate of diluted exhaust, as follows:

(1) *Construction.* Use a tunnel with inside surfaces of 300 series stainless steel. Electrically ground the entire dilution tunnel. We recommend a thin-walled and insulated dilution tunnel to minimize temperature differences between the wall and the exhaust gases.

(2) *Pressure control.* Maintain static pressure at the location where raw exhaust is introduced into the tunnel within 1.2 kPa of atmospheric pressure. You may use a booster blower to control this pressure. If you test an engine using more careful pressure control and you show by engineering analysis or by test data that you require this level of control to demonstrate compliance at the applicable standards, we will maintain the same level of static pressure control when we test that engine.

(3) *Mixing.* Introduce raw exhaust into the tunnel by directing it downstream

along the centerline of the tunnel. You may introduce a fraction of dilution air radially from the tunnel's inner surface to minimize exhaust interaction with the tunnel walls. You may configure the system with turbulence generators such as orifice plates or fins to achieve good mixing. We recommend a minimum Reynolds number, $Re^{\#}$, of 4000 for the diluted exhaust stream, where $Re^{\#}$ is based on the inside diameter of the dilution tunnel. $Re^{\#}$ is defined in § 1065.640.

(4) *Flow measurement preconditioning.* You may condition the diluted exhaust before measuring its flow rate, as long as this conditioning takes place downstream of any sample probes, as follows:

(i) You may use flow straighteners, pulsation dampeners, or both of these.

(ii) You may use a filter.

(iii) You may use a heat exchanger to control the temperature upstream of any flow meter. Note paragraph (c)(6) of this section regarding aqueous condensation.

(5) *Flow measurement.* Section 1065.240 describes measurement instruments for diluted exhaust flow.

(6) *Aqueous condensation.* You may either prevent aqueous condensation throughout the dilution tunnel or you may measure humidity at the flow meter inlet. Calculations in § 1065.645 and § 1065.650 account for either method of addressing humidity in the diluted exhaust. Note that preventing aqueous condensation involves more than keeping pure water in a vapor phase (see § 1065.1001).

(7) *Flow compensation.* Maintain nominally constant molar, volumetric or mass flow of diluted exhaust. You may maintain nominally constant flow by either maintaining the temperature and pressure at the flow meter or by directly controlling the flow of diluted exhaust. You may also directly control the flow of proportional samplers to maintain proportional sampling. For an individual test, validate proportional sampling as described in § 1065.545.

(d) *Partial-flow dilution (PFD).* Except as specified in this paragraph (d), you may dilute a partial flow of raw or previously diluted exhaust before measuring emissions. § 1065.240 describes PFD-related flow measurement instruments. PFD may consist of constant or varying dilution ratios as described in paragraphs (d)(2) and (3) of this section. An example of a constant dilution ratio PFD is a ''secondary dilution PM'' measurement system. An example of a varying dilution ratio PFD is a ''bag mini-diluter'' or BMD.

(1) *Applicability.* (i) You may not use PFD if the standard-setting part prohibits it.

(ii) You may use PFD to extract a proportional raw exhaust sample for any batch or continuous PM emission sampling over any transient duty cycle only if we have explicitly approved it according to § 1065.10 as an alternative procedure to the specified procedure for full-flow CVS.

(iii) You may use PFD to extract a proportional raw exhaust sample for any batch or continuous gaseous emission sampling.

(iv) You may use PFD to extract a proportional raw exhaust sample for any batch or continuous PM emission sampling over any steady-state duty cycle or its ramped-modal cycle (RMC) equivalent.

(v) You may use PFD to extract a proportional raw exhaust sample for any batch or continuous field-testing.

(vi) You may use PFD to extract a proportional diluted exhaust sample from a CVS for any batch or continuous emission sampling.

(vii) You may use PFD to extract a constant raw or diluted exhaust sample for any continuous emission sampling.

(2) *Constant dilution-ratio PFD.* Do one of the following for constant dilution-ratio PFD:

(i) Dilute an already proportional flow. For example, you may do this as a way of performing secondary dilution from a CVS tunnel to achieve temperature control for PM sampling.

(ii) Continuously measure constituent concentrations. For example, you might dilute to precondition a sample of raw exhaust to control its temperature, humidity, or constituent concentrations upstream of continuous analyzers. In this case, you must take into account the dilution ratio before multiplying the continuous concentration by the sampled exhaust flow rate.

(iii) Extract a proportional sample from the constant dilution ratio PFD system. For example, you might use a variable-flow pump to proportionally fill a gaseous storage medium such as a bag from a PFD system. In this case, the proportional sampling must meet the same specifications as varying dilution ratio PFD in paragraph (d)(3) of this section.

(3) *Varying dilution-ratio PFD.* All the following provisions apply for varying dilution-ratio PFD:

(i) Use a control system with sensors and actuators that can maintain proportional sampling over intervals as short as 200 ms (*i.e.*, 5 Hz control).

(ii) For control input, you may use any sensor output from one or more measurements; for example, intake-air flow, fuel flow, exhaust flow, engine speed, and intake manifold temperature and pressure.

(iii) Account for any emission transit time in the PFD system.

(iv) You may use preprogrammed data if they have been determined for the specific test site, duty cycle, and test engine from which you dilute emissions.

(v) We recommend that you run practice cycles to meet the validation criteria in § 1065.545. Note that you must validate every emission test by meeting the validation criteria with the data from that specific test, not from practice cycles or other tests.

(vi) You may not use a PFD system that requires preparatory tuning or calibration with a CVS or with the emission results from a CVS. Rather, you must be able to independently calibrate the PFD.

(e) *Dilution and temperature control of PM samples.* Dilute PM samples at least once upstream of transfer lines. You may dilute PM samples upstream of a transfer line using full-flow dilution, or partial-flow dilution immediately downstream of a PM probe. Control sample temperature to a (47 ±5) °C tolerance, as measured anywhere within 20 cm upstream or downstream of the PM storage media (such as a filter). Measure this temperature with a bare-wire junction thermocouple with wires that are (0.500 ± 0.025) mm diameter, or with another suitable instrument that has equivalent performance. Heat or cool the PM sample primarily by dilution.

**§ 1065.145 Gaseous and PM probes, transfer lines, and sampling system components.**

(a) *Continuous and batch sampling.* Determine the total mass of each constituent with continuous or batch sampling, as described in § 1065.15(c)(2). Both types of sampling systems have probes, transfer lines, and other sampling system components that are described in this section.

(b) *Gaseous and PM sample probes.* A probe is the first fitting in a sampling system. It protrudes into a raw or diluted exhaust stream to extract a sample, such that its inside and outside surfaces are in contact with the exhaust. A sample is transported out of a probe into a transfer line, as described in paragraph (c) of this section. The following provisions apply to probes:

(1) *Probe design and construction.* Use sample probes with inside surfaces of 300 series stainless steel or, for raw exhaust sampling, use a nonreactive material capable of withstanding raw exhaust temperatures. Locate sample

probes where constituents are mixed to their mean sample concentration. Take into account the mixing of any crankcase emissions that may be routed into the raw exhaust. Locate each probe to minimize interference with the flow to other probes. We recommend that all probes remain free from influences of boundary layers, wakes, and eddies—especially near the outlet of a raw-exhaust tailpipe where unintended dilution might occur. Make sure that purging or back-flushing of a probe does not influence another probe during testing. You may use a single probe to extract a sample of more than one constituent as long as the probe meets all the specifications for each constituent.

(2) *Gaseous sample probes.* Use either single-port or multi-port probes for sampling gaseous emissions. You may orient these probes in any direction relative to the raw or diluted exhaust flow. For some probes, you must control sample temperatures, as follows:

(i) For probes that extract $NO_X$ from diluted exhaust, control the probe's wall temperature to prevent aqueous condensation.

(ii) For probes that extract hydrocarbons for NMHC or NMHCE analysis from the diluted exhaust of compression-ignition engines, 2-stroke spark-ignition engines, or 4-stroke spark-ignition engines below 19 kW, maintain a probe wall temperature tolerance of (191 ± 11) °C.

(3) *PM sample probes.* Use PM probes with a single opening at the end. Orient PM probes to face directly upstream. If you shield a PM probe's opening with a PM pre-classifier such as a hat, you may not use the preclassifier we specify in paragraph (d)(4)(i) of this section. We recommend sizing the inside diameter of PM probes to approximate isokinetic sampling at the expected mean flow rate.

(c) *Transfer lines.* You may use transfer lines to transport an extracted sample from a probe to an analyzer, storage medium, or dilution system. Minimize the length of all transfer lines by locating analyzers, storage media, and dilution systems as close to probes as practical. We recommend that you minimize the number of bends in transfer lines and that you maximize the radius of any unavoidable bend. Avoid using 90° elbows, tees, and cross-fittings in transfer lines. Where such connections and fittings are necessary, take steps, using good engineering judgment, to ensure that you meet the temperature tolerances in this paragraph (c). This may involve measuring temperature at various locations within transfer lines and fittings. You may use a single transfer line to transport a sample of more than one constituent, as long as the transfer line meets all the specifications for each constituent. The following construction and temperature tolerances apply to transfer lines:

(1) *Gaseous samples.* Use transfer lines with inside surfaces of 300 series stainless steel, PTFE, Viton™, or any other material that you demonstrate has better properties for emission sampling. For raw exhaust sampling, use a non-reactive material capable of withstanding raw exhaust temperatures. You may use in-line filters if they do not react with exhaust constituents and if the filter and its housing meet the same temperature requirements as the transfer lines, as follows:

(i) For $NO_X$ transfer lines upstream of either an $NO_2$-to-NO converter that meets the specifications of § 1065.378 or a chiller that meets the specifications of § 1065.376, maintain a sample temperature that prevents aqueous condensation.

(ii) For THC transfer lines for testing compression-ignition engines, 2-stroke spark-ignition engines, or 4-stroke spark-ignition engines below 19 kW, maintain a wall temperature tolerance throughout the entire line of (191 ±11) °C. If you sample from raw exhaust, you may connect an unheated, insulated transfer line directly to a probe. Design the length and insulation of the transfer line to cool the highest expected raw exhaust temperature to no lower than 191 °C, as measured at the transfer line's outlet.

(2) *PM samples.* We recommend heated transfer lines or a heated enclosure to minimize temperature differences between transfer lines and exhaust constituents. Use transfer lines that are inert with respect to PM and are electrically conductive on the inside surfaces. We recommend using PM transfer lines made of 300 series stainless steel. Electrically ground the inside surface of PM transfer lines.

(d) *Optional sample-conditioning components for gaseous sampling.* You may use the following sample-conditioning components to prepare gaseous samples for analysis, as long you do not install or use them in a way that adversely affects your ability to show that your engines comply with all applicable gaseous emission standards.

(1) *$NO_2$-to-NO converter.* You may use an $NO_2$-to-NO converter that meets the efficiency-performance check specified in § 1065.378 at any point upstream of a $NO_X$ analyzer, sample bag, or other storage medium.

(2) *Sample dryer.* You may use either type of sample dryer described in this paragraph (d)(2) to decrease the effects of water on gaseous emission measurements. You may not use a chemical dryer, or used dryers upstream of PM sample filters.

(i) *Osmotic-membrane.* You may use an osmotic-membrane dryer upstream of any gaseous analyzer or storage medium, as long as it meets the temperature specifications in paragraph (c)(1) of this section. Because osmotic-membrane dryers may deteriorate after prolonged exposure to certain exhaust constituents, consult with the membrane manufacturer regarding your application before incorporating an osmotic-membrane dryer. Monitor the dewpoint, $T_{dew}$, and absolute pressure, $p_{total}$, downstream of an osmotic-membrane dryer. You may use continuously recorded values of $T_{dew}$ and $p_{total}$ in the amount of water calculations specified in § 1065.645. If you do not continuously record these values, you may use their peak values observed during a test or their alarm setpoints as constant values in the calculations specified in § 1065.645. You may also use a nominal $p_{total}$, which you may estimate as the dryer's lowest absolute pressure expected during testing.

(ii) *Thermal chiller.* You may use a thermal chiller upstream of some gas analyzers and storage media. You may not use a thermal chiller upstream of a THC measurement system for compression-ignition engines, 2-stroke spark-ignition engines, or 4-stroke spark-ignition engines below 19 kW. If you use a thermal chiller upstream of an $NO_2$-to-NO converter or in a sampling system without an $NO_2$-to-NO converter, the chiller must meet the $NO_2$ loss-performance check specified in § 1065.376. Monitor the dewpoint, $T_{dew}$, and absolute pressure, $p_{total}$, downstream of a thermal chiller. You may use continuously recorded values of $T_{dew}$ and $p_{total}$ in the emission calculations specified in § 1065.650. If you do not continuously record these values, you may use their peak values observed during a test or their high alarm setpoints as constant values in the amount of water calculations specified in § 1065.645. You may also use a nominal $p_{total}$, which you may estimate as the dryer's lowest absolute pressure expected during testing. If it is valid to assume the degree of saturation in the thermal chiller, you may calculate $T_{dew}$ based on the known chiller efficiency and continuous monitoring of chiller temperature, $T_{chiller}$. If you do not continuously record values of $T_{chiller}$, you may use its peak value observed during a test, or its alarm setpoint, as a constant value to determine a constant amount of water according to

§ 1065.645. If it is valid to assume that $T_{chiller}$ is equal to $T_{dew}$, you may use $T_{chiller}$ in lieu of $T_{dew}$ according to § 1065.645. If we ask for it, you must show by engineering analysis or by data the validity of any assumptions allowed by this paragraph (d)(2)(ii).

(3) *Sample pumps.* You may use sample pumps upstream of an analyzer or storage medium for any gas. Use sample pumps with inside surfaces of 300 series stainless steel, PTFE, or any other material that you demonstrate has better properties for emission sampling. For some sample pumps, you must control temperatures, as follows:

(i) If you use a $NO_X$ sample pump upstream of either an $NO_2$-to-NO converter that meets § 1065.378 or a chiller that meets § 1065.376, it must be heated to prevent aqueous condensation.

(ii) For testing compression-ignition engines, 2-stroke spark-ignition engines, or 4-stroke compression ignition engines below 19 kW, if you use a THC sample pump upstream of a THC analyzer or storage medium, its inner surfaces must be heated to a tolerance of (191 ±11) °C.

(e) *Optional sample-conditioning components for PM sampling.* You may use the following sample-conditioning components to prepare PM samples for analysis, as long you do not install or use them in a way that adversely affects your ability to show that your engines comply with the applicable PM emission standards. You may condition PM samples to minimize positive and negative biases to PM results, as follows:

(1) *PM preclassifier.* You may use a PM preclassifier to remove large-diameter particles. The PM preclassifier may be either an inertial impactor or a cyclonic separator. It must be constructed of 300 series stainless steel. The preclassifier must be rated to remove at least 50% of PM at an aerodynamic diameter of 10 μm and no more than 1% of PM at an aerodynamic diameter of 1 μm over the range of flow rates for which you use it. Follow the preclassifier manufacturer's instructions for any periodic servicing that may be necessary to prevent a buildup of PM. Install the preclassifier in the dilution system downstream of the last dilution stage. Configure the preclassifier outlet with a means of bypassing any PM sample media so the preclassifier flow may be stabilized before starting a test. Locate PM sample media within 50 cm downstream of the preclassifier's exit. You may not use this preclassifier if you use a PM probe that already has a preclassifier. For example, if you use a hat-shaped preclassifier that is located immediately upstream of the probe in such a way that it forces the sample flow to change direction before entering the probe, you may not use any other preclassifier in your PM sampling system.

(2) *Other components.* You may request to use other PM conditioning components upstream of a PM preclassifier, such as components that condition humidity or remove gaseous-phase hydrocarbons from the diluted exhaust stream. You may use such components only if we approve them under § 1065.10.

**§ 1065.150 Continuous sampling.**

You may use continuous sampling techniques for measurements that involve raw or dilute sampling. Make sure continuous sampling systems meet the specifications in § 1065.145. Make sure continuous analyzers meet the specifications in subparts C and D of this part.

**§ 1065.170 Batch sampling for gaseous and PM constituents.**

Batch sampling involves collecting and storing emissions for later analysis. Examples of batch sampling include collecting and storing gaseous emissions in a bag and collecting and storing PM on a filter. You may use batch sampling to store emissions that have been diluted at least once in some way, such as with CVS, PFD, or BMD. You may use batch-sampling to store undiluted emissions only if we approve it as an alternate procedure under § 1065.10.

(a) *Sampling methods.* For batch sampling, extract the sample at a rate proportional to the exhaust flow. If you extract from a constant-volume flow rate, sample at a constant-volume flow rate. If you extract from a varying flow rate, vary the sample rate in proportion to the varying flow rate. Validate proportional sampling after an emission test as described in § 1065.545. Use storage media that do not change measured emission levels (either up or down). For example, do not use sample bags for storing emissions if the bags are permeable with respect to emissions or if they off-gas emissions. As another example, do not use PM filters that irreversibly absorb or adsorb gases.

(b) *Gaseous sample storage media.* Store gas volumes in sufficiently clean containers that minimally off-gas or allow permeation of gases. Use good engineering judgment to determine acceptable thresholds of storage media cleanliness and permeation. To clean a container, you may repeatedly purge and evacuate a container and you may heat it. Use a flexible container (such as a bag) within a temperature-controlled environment, or use a temperature controlled rigid container that is initially evacuated or has a volume that can be displaced, such as a piston and cylinder arrangement. Use containers meeting the specifications in the following table, noting that you may request to use other container materials under § 1065.10:

TABLE 1 OF § 1065.170.—GASEOUS BATCH SAMPLING CONTAINER MATERIALS

| Emissions | Engines | |
|---|---|---|
| | Compression-ignition, two-stroke spark ignition, 4-stroke spark-ignition <19 kW | All other engines |
| CO, $CO_2$, $O_2$, $CH_4$, $C_2H_6$, $C_3H_8$, NO, $NO_2$ [1]. | Tedlar$_{TM}$,[2] Kynar$_{TM}$,[2] Teflon$_{TM}$,[3] or 300 series stainless steel [3] ..... | Tedlar$_{TM}$,[2] Kynar$_{TM}$,[2] Teflon$_{TM}$,[3] or 300 series stainless steel[3] |
| THC, NMHC ..... | Teflon™ [4] or 300 series stainless steel [4] ..... | Tedlar$_{TM}$,[2] Kynar$_{TM}$,[2] Teflon$_{TM}$,[3] or 300 series stainless steel [3] |

[1] As long as you prevent aqueous condensation in storage container.
[2] Up to 40 °C.
[3] Up to 202 °C.
[4] At (191 ±11) °C.

(c) *PM sample media.* Apply the following methods for sampling particulate emissions:

(1) If you use filter-based sampling media to extract and store PM for measurement, your procedure must meet the following specifications:

(i) If you expect that a filter's total surface concentration of PM will exceed

0.473 mm/mm² for a given test interval, you may use filter media with a minimum initial collection efficiency of 98%; otherwise you must use a filter media with a minimum initial collection efficiency of 99.7%. Collection efficiency must be measured as described in ASTM D 2986–95a (incorporated by reference in § 1065.1010), though you may rely on the sample-media manufacturer's measurements reflected in their product ratings to show that you meet applicable requirements.

(ii) The filter must be circular, with an overall diameter of46.50± 0.6 mm and an exposed diameter of at least 38 mm. See the cassette specifications in paragraph (c)(1)(vi) of this section.

(iii) We highly recommend that you use a pure PTFE filter material that does not have any flow-through support bonded to the back and has an overall thickness of 40± 20 μm. An inert polymer ring may be bonded to the periphery of the filter material for support and for sealing between the filter cassette parts. We consider Polymethylpentene (PMP) and PTFE inert materials for a support ring, but other inert materials may be used. See the cassette specifications in paragraph (c)(1)(v) of this section. We allow the use of PTFE-coated glass fiber filter material, as long as this filter media selection does not affect your ability to demonstrate compliance with the applicable standards, which we base on a pure PTFE filter material. Note that we will use pure PTFE filter material for compliance testing, and we may require you to use pure PTFE filter material for any compliance testing we require, such as for selective enforcement audits.

(iv) You may request to use other filter materials or sizes under the provisions of § 1065.10.

(v) To minimize turbulent deposition and to deposit PM evenly on a filter, use a 12.5° (from center) divergent cone angle to transition from the transfer-line inside diameter to the exposed diameter of the filter face. Use 300 series stainless steel for this transition.

(vi) Maintain sample velocity at the filter face at or below 100 cm/s, where filter face velocity is the measured volumetric flow rate of the sample at the pressure and temperature upstream of the filter face, divided by the filter's exposed area.

(vii) Use a clean cassette designed to the specifications of Figure 1 of § 1065.170 and made of any of the following materials: Delrin™, 300 series stainless steel, polycarbonate, acrylonitrile-butadiene-styrene (ABS) resin, or conductive polypropylene. We recommend that you keep filter cassettes clean by periodically washing or wiping them with a compatible solvent applied using a lint-free cloth. Depending upon your cassette material, ethanol ($C_2H_5OH$) might be an acceptable solvent. Your cleaning frequency will depend on your engine's PM and HC emissions.

(viii) If you store filters in cassettes in an automatic PM sampler, cover or seal individual filter cassettes after sampling to prevent communication of semi-volatile matter from one filter to another.

(2) You may use other PM sample media that we approve under § 1065.10, including non-filtering techniques. For example, you might deposit PM on an inert substrate that collects PM using electrostatic, thermophoresis, inertia, diffusion, or some other deposition mechanism, as approved.

BILLING CODE 6560–50–P

Figure 1 of §1065.170—PM filter cassette specifications.

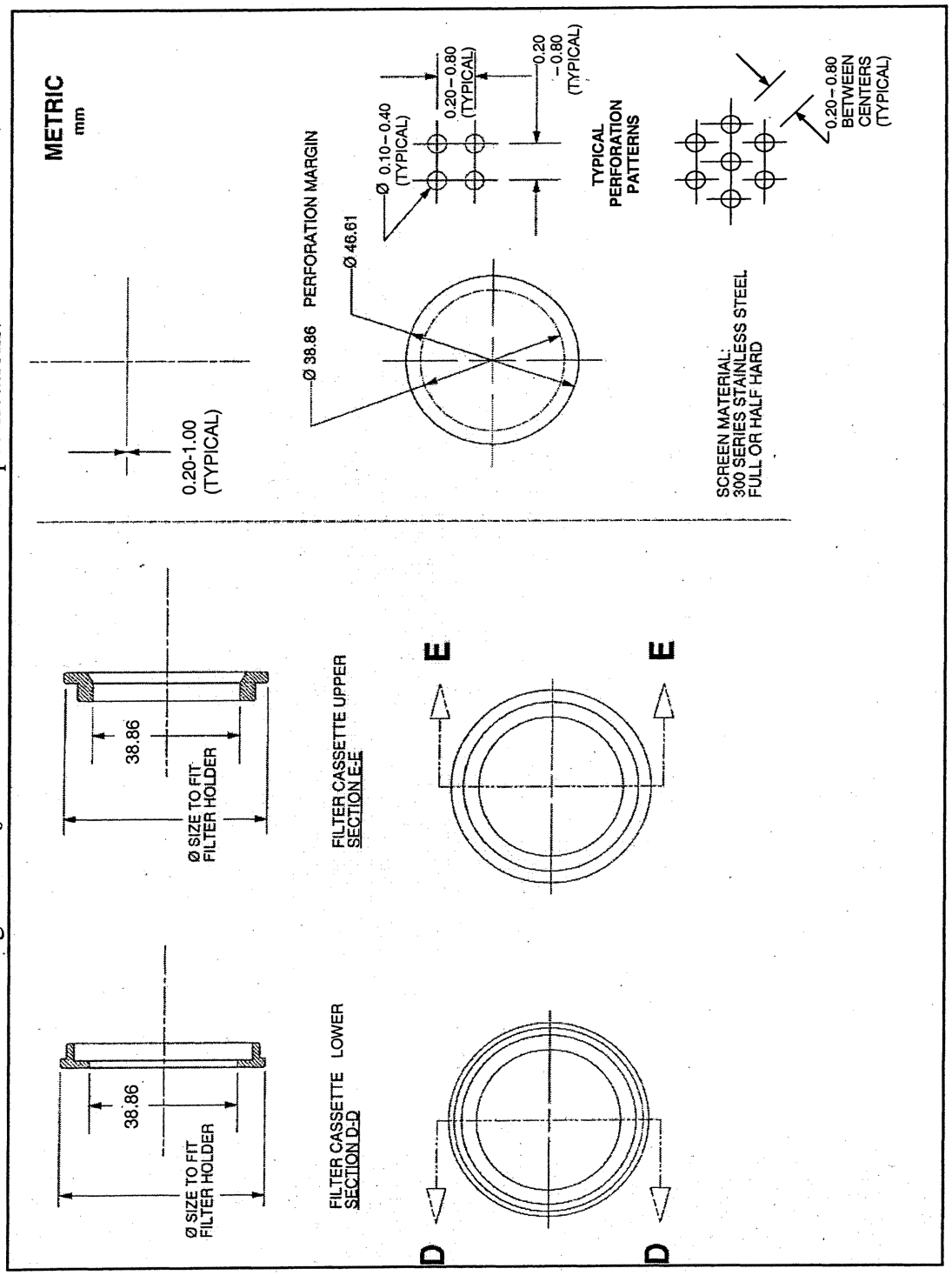


BILLING CODE 6560–50–C

**§ 1065.190 PM-stabilization and weighing environments for gravimetric analysis.**

(a) This section describes the two environments required to stabilize and weigh PM for gravimetric analysis: the PM stabilization environment, where filters are stored before weighing; and the weighing environment, where the balance is located. The two environments may share a common space. These volumes may be one or more rooms, or they may be much smaller, such as a glove box or an automated weighing system consisting of one or more countertop-sized environments.

(b) We recommend that you keep both the stabilization and the weighing environments free of ambient contaminants, such as dust, aerosols, or semi-volatile material that could contaminate PM samples. We recommend that these environments conform with an ''as-built'' Class Six clean room specification according to ISO 14644–1 (incorporated by reference in § 1065.1010); however, we also recommend that you deviate from ISO 14644–1 as necessary to minimize air motion that might affect weighing. We recommend maximum air-supply and

air-return velocities of 0.05 m/s in the weighing environment.

(c) Verify the cleanliness of the PM-stabilization environment using reference filters, as described in § 1065.390(b).

(d) Maintain the following ambient conditions within the two environments during all stabilization and weighing:

(1) *Ambient temperature and tolerances.* Maintain the weighing environment at a tolerance of (22 ±1) °C. If the two environments share a common space, maintain both environments at a tolerance of (22 ±1) °C. If they are separate, maintain the stabilization environment at a tolerance of (22 ±3) °C.

(2) *Dewpoint.* Maintain a dewpoint of 9.5 °C in both environments. This dewpoint will control the amount of water associated with sulfuric acid ($H_2SO_4$) PM, such that 1.1368 grams of water will be associated with each gram of $H_2SO_4$.

(3) *Dewpoint tolerances.* If the expected fraction of sulfuric acid in PM is unknown, we recommend controlling dewpoint at within ±1 °C tolerance. This would limit any dewpoint-related change in PM to less than ±2%, even for PM that is 50% sulfuric acid. If you know your expected fraction of sulfuric acid in PM, we recommend that you select an appropriate dewpoint tolerance for showing compliance with emission standards using the following table as a guide:

TABLE 1 OF § 1065.190.—DEWPOINT TOLERANCE AS A FUNCTION OF % PM CHANGE AND % SULFURIC ACID PM

| Expected sulfuric acid fraction of PM (percent) | ±0.5% PM mass change | ±1.0% PM mass change | ±2.0% PM mass change |
|---|---|---|---|
| 5 | ±3.0 °C | ±6.0 °C | ±12 °C |
| 50 | ±0.30 °C | ±0.60 °C | ±1.2 °C |
| 100 | ±0.15 °C | ±0.30 °C | ±0.60 °C |

(e) Verify the following ambient conditions using measurement instruments that meet the specifications in subpart C of this part:

(1) Continuously measure dewpoint and ambient temperature. Use these values to determine if the stabilization and weighing environments have remained within the tolerances specified in paragraph (d) of this section for at least the past 60 min. We recommend that you provide an interlock that automatically prevents the balance from reporting values if either of the environments have not been within the applicable tolerances for the past 60 min.

(2) Continuously measure atmospheric pressure within the weighing environment. You may use a shared atmospheric pressure meter as long as you can show that your equipment for handling the weighing environment air maintains ambient pressure at the balance within ±100 Pa of the shared atmospheric pressure. Provide a means to record the most recent atmospheric pressure when you weigh each PM sample. Use this value to calculate the PM buoyancy correction in § 1065.690.

(f) We recommend that you install a balance as follows:

(1) Install the balance on a vibration-isolation platform to isolate it from external noise and vibration.

(2) Shield the balance from convective airflow with a static-dissipating draft shield that is electrically grounded.

(3) Follow the balance manufacturer's specifications for all preventive maintenance.

(4) Operate the balance manually or as part of an automated weighing system.

(g) Minimize static electric charge in the balance environment, as follows:

(1) Electrically ground the balance.

(2) Use 300 series stainless steel tweezers if PM samples must be handled manually.

(3) Ground tweezers with a grounding strap, or provide a grounding strap for the operator such that the grounding strap shares a common ground with the balance. Make sure grounding straps have an appropriate resistor to protect operators from accidental shock.

(4) Provide a static-electricity neutralizer that is electrically grounded in common with the balance to remove static charge from PM samples, as follows:

(i) You may use radioactive neutralizers such as a Polonium ($^{210}Po$) source. Replace radioactive sources at the intervals recommended by the neutralizer manufacturer.

(ii) You may use other neutralizers, such as corona-discharge ionizers. If you use a corona-discharge ionizer, we recommend that you monitor it for neutral net charge according to the ionizer manufacturer's recommendations.

(5) We recommend that you use a device to monitor the static charge of PM sample media surfaces.

(6) We recommend that you neutralize PM sample media to within ±2.0 V of neutral.

**§ 1065.195 PM-stabilization environment for in-situ analyzers.**

(a) This section describes the environment required to determine PM in-situ. For in-situ analyzers, such as an inertial balance, this is the environment within a PM sampling system that surrounds the PM sample media. This is typically a very small volume.

(b) Maintain the environment free of ambient contaminants, such as dust, aerosols, or semi-volatile material that could contaminate PM samples. Filter all air used for stabilization with HEPA filters. Ensure that HEPA filters are installed properly so that background PM does not leak past the HEPA filters.

(c) Maintain the following thermodynamic conditions within the environment before measuring PM:

(1) *Ambient temperature.* Select a nominal ambient temperature, $T_{amb}$, between (42 and 52) °C. Maintain the ambient temperature within ±1.0 °C of the selected nominal value.

(2) *Dewpoint.* Select a dewpoint, $T_{dew}$, that corresponds to $T_{amb}$ such that $T_{dew} = (0.95T_{amb} - 11.40)$ °C. The resulting dewpoint will control the amount of water associated with sulfuric acid ($H_2SO_4$) PM, such that 1.1368 grams of water will be associated with each gram of $H_2SO_4$. For example, if you select a nominal ambient temperature of 47 °C, set a dewpoint of 33.3 °C.

(3) *Dewpoint tolerance.* If the expected fraction of sulfuric acid in PM is unknown, we recommend controlling dewpoint within ± 1.0 °C. This would limit any dewpoint-related change in PM to less than ± 2%, even for PM that is 50% sulfuric acid. If you know your expected fraction of sulfuric acid in PM, we recommend that you select an appropriate dewpoint tolerance for showing compliance with emission standards using Table 1 of § 1065.190 as a guide:

(4) *Absolute pressure.* Maintain an absolute pressure of (80.000 to 103.325) kPa. Use good engineering judgment to

maintain a more stringent tolerance of absolute pressure if your PM measurement instrument requires it.

(d) Continuously measure dewpoint, temperature, and pressure using measurement instruments that meet the PM-stabilization environment specifications in subpart C of this part. Use these values to determine if the in-situ stabilization environment is within the tolerances specified in paragraph (c) of this section. Do not use any PM quantities that are recorded when any of these parameters exceed the applicable tolerances.

(e) If you use an inertial PM balance, we recommend that you install it as follows:

(1) Isolate the balance from any external noise and vibration that is within a frequency range that could affect the balance.

(2) Follow the balance manufacturer's specifications.

(f) If static electricity affects an inertial balance, you may use a static neutralizer, as follows:

(1) You may use a radioactive neutralizer such as a Polonium ($^{210}$Po) source or a Krypton ($^{85}$Kr) source. Replace radioactive sources at the intervals recommended by the neutralizer manufacturer.

(2) You may use other neutralizers, such as a corona-discharge ionizer. If you use a corona-discharge ionizer, we recommend that you monitor it for neutral net charge according to the ionizer manufacturer's recommendations.

## Subpart C—Measurement Instruments

### § 1065.201 Overview and general provisions.

(a) *Scope.* This subpart specifies measurement instruments and associated system requirements related to emission testing in a laboratory and in the field. This includes laboratory instruments and portable emission measurement systems (PEMS) for measuring engine parameters, ambient conditions, flow-related parameters, and emission concentrations.

(b) *Instrument types.* You may use any of the specified instruments as described in this subpart to perform emission tests. If you want to use one of these instruments in a way that is not specified in this subpart, or if you want to use a different instrument, you must first get us to approve your alternate procedure under § 1065.10. Where we specify more than one instrument for a particular measurement, we may identify which instrument serves as the reference for showing that an alternative procedure is equivalent to the specified procedure.

(c) *Measurement systems.* Assemble a system of measurement instruments that allows you to show that your engines comply with the applicable emission standards, using good engineering judgment. When selecting instruments, consider how conditions such as vibration, temperature, pressure, humidity, viscosity, specific heat, and exhaust composition (including trace concentrations) may affect instrument compatibility and performance.

(d) *Redundant systems.* For all measurement instruments described in this subpart, you may use data from multiple instruments to calculate test results for a single test. If you use redundant systems, use good engineering judgment to use multiple measured values in calculations or to disregard individual measurements. Note that you must keep your results from all measurements, as described in § 1065.25. This requirements applies whether or not you actually use the measurements in your calculations.

(e) *Range.* You may use an instrument's response above 100% of its operating range if this does not affect your ability to show that your engines comply with the applicable emission standards. Note that we require additional testing and reporting if an analyzer responds above 100% of its range. See § 1065.550. Auto-ranging analyzers do not require additional testing or reporting.

(f) *Related subparts for laboratory testing.* Subpart D of this part describes how to evaluate the performance of the measurement instruments in this subpart. In general, if an instrument is specified in a specific section of this subpart, its calibration and verifications are typically specified in a similarly numbered section in subpart D of this part. For example, § 1065.290 gives instrument specifications for PM balances and § 1065.390 describes the corresponding calibrations and verifications. Note that some instruments also have other requirements in other sections of subpart D of this part. Subpart B of this part identifies specifications for other types of equipment, and subpart H of this part specifies engine fluids and analytical gases.

(g) *Field testing and testing with PEMS.* Subpart J of this part describes how to use these and other measurement instruments for field testing and other PEMS testing.

### § 1065.202 Data updating, recording, and control.

Your test system must be able to update data, record data and control systems related to operator demand, the dynamometer, sampling equipment, and measurement instruments. Use data acquisition and control systems that can record at the specified minimum frequencies, as follows:

TABLE OF § 1065.202.—DATA RECORDING AND CONTROL MINIMUM FREQUENCIES

| Applicable test protocol section | Measured values | Minimum command and control frequency | Minimum recording frequency |
|---|---|---|---|
| § 1065.510 | Speed and torque during an engine step-map | 1 Hz | 1 mean value per step. |
| § 1065.510 | Speed and torque during an engine sweep-map | 5 Hz | 1 Hz means. |
| § 1065.514, § 1065.530 | Transient duty cycle reference and feedback speeds and torques. | 5 Hz | 1 Hz means. |
| § 1065.514, § 1065.530 | Steady-state and ramped-modal duty cycle reference and feedback speeds and torques. | 1 Hz | 1 Hz. |
| § 1065.520, § 1065.530, § 1065.550 | Continuous concentrations of raw or dilute analyzers | N/A | 1 Hz. |
| § 1065.520, § 1065.530, § 1065.550 | Batch concentrations of raw or dilute analyzers | N/A | 1 mean value per test interval. |
| § 1065.530, § 1065.545 | Diluted exhaust flow rate from a CVS with a heat exchanger upstream of the flow measurement. | N/A | 1 Hz. |
| § 1065.530, § 1065.545 | Diluted exhaust flow rate from a CVS without a heat exchanger upstream of the flow measurement. | 5 Hz | 1 Hz means. |

TABLE OF § 1065.202.—DATA RECORDING AND CONTROL MINIMUM FREQUENCIES—Continued

| Applicable test protocol section | Measured values | Minimum command and control frequency | Minimum recording frequency |
|---|---|---|---|
| § 1065.530, § 1065.545 | Intake-air or raw-exhaust flow rate | N/A | 1 Hz means. |
| § 1065.530, § 1065.545 | Dilution air if actively controlled | 5 Hz | 1 Hz means. |
| § 1065.530 | Sample flow from a CVS that has a heat exchanger | 1 Hz | 1 Hz. |
| § 1065.530, § 1065.545 | Sample flow from a CVS does not have a heat exchanger. | 5 Hz | 1 Hz mean. |

**§ 1065.205 Performance specifications for measurement instruments.**

Your test system as a whole must meet all the applicable calibrations, verifications, and test-validation criteria specified in subparts D and F of this part or subpart J of this part for using PEMS and for performing field testing. We recommend that your instruments meet the specifications in Table 1 of this section for all ranges you use for testing. We also recommend that you keep any documentation you receive from instrument manufacturers showing that your instruments meet the specifications in Table 1 of this section.

Table 1 of §1065.205–Recommended performance specifications for measurement instruments

| Measurement Instrument | Measured quantity symbol | Complete System Rise time and Fall time | Recording update frequency | Accuracy[a] | Repeatability[a] | Noise[a] |
|---|---|---|---|---|---|---|
| Engine speed transducer | $f_n$ | 1 s | 1 Hz means | 2.0 % of pt. or 0.5 % of max. | 1.0 % of pt. or 0.25 % of max. | 0.05 % of max |
| Engine torque transducer | $T$ | 1 s | 1 Hz means | 2.0 % of pt. or 1.0 % of max. | 1.0 % of pt. or 0.5 % of max | 0.05 % of max. |
| Electrical work (active-power meter) | $W$ | 1 s | 1 Hz means | 2.0 % of pt. or 0.5 % of max. | 1.0 % of pt. or 0.25 % of max. | 0.05 % of max |
| General pressure transducer (not a part of another instrument) | $p$ | 5 s | 1 Hz | 2.0 % of pt. or 1.0 % of max. | 1.0 % of pt. or 0.50 % of max. | 0.1 % of max |
| Atmospheric pressure meter used for PM-stabilization and balance environments | $p_{atmos}$ | 50 s | 5 times per hour | 50 Pa | 25 Pa | 5 Pa |
| General purpose atmospheric pressure meter | $p_{atmos}$ | 50 s | 5 times per hour | 250 Pa | 100Pa | 50 Pa |
| Temperature sensor for PM-stabilization and balance environments | $T$ | 50 s | 0.1 Hz | 0.25 K | 0.1 K | 0.1 K |
| Other temperature sensor (not a part of another instrument) | $T$ | 10 s | 0.5 Hz | 0.4 % of pt. K or 0.2 % of max. K | 0.2 % of pt. K or 0.1 % of max. K | 0.1 % of max |
| Dewpoint sensor for PM-stabilization and balance environments | $T_{dew}$ | 50 s | 0.1 Hz | 0.25 K | 0.1 K | 0.02 K |
| Other dewpoint sensor | $T_{dew}$ | 50 s | 0.1 Hz | 1 K | 0.5 K | 0.1 K |
| Fuel flow meter (Fuel totalizer in parentheses) | $\dot{m}$ | 5 s (N/A) | 1 Hz (N/A) | 2.0 % of pt. or 1.5 % of max. | 1.0 % of pt. or 0.75 % of max. | 0.5 % of max. |
| Total diluted exhaust meter (CVS) (With heat exchanger before meter) | $\dot{n}$ | 1 s (5 s) | 1 Hz means (1 Hz) | 2.0 % of pt. or 1.5 % of max. | 1.0 % of pt. or 0.75 % of max. | 1.0 % of max. |
| Dilution air, inlet air, exhaust, and sample flow meters | $\dot{n}$ | 1 s | 1 Hz means of 5 Hz samples | 2.5 % of pt. or 1.5 % of max. | 1.25 % of pt. or 0.75 % of max. | 1.0 % of max. |
| Continuous gas analyzer | $x$ | 5 s | 1 Hz | 2.0 % of pt. or 2.0 % of meas. | 1.0 % of pt. or 1.0 % of meas. | 1.0 % of max. |
| Batch gas analyzer | $x$ | N/A | N/A | 2.0 % of pt. or 2.0 % of meas. | 1.0 % of pt. or 1.0 % of meas. | 1.0 % of max. |
| Gravimetric PM balance | $m_{PM}$ | N/A | N/A | See §1065.790 | 0.5 µg | N/A |
| Inertial PM balance | $m_{PM}$ | 5 s | 1 Hz | 2.0 % of pt. or 2.0 % of meas. | 1.0 % of pt. or 1.0 % of meas. | 0.2 % of max. |

[a] Accuracy, repeatability, and noise are all determined with the same collected data, as described in §1065.305, and based on absolute values. "pt." refers to the overall flow-weighted mean value expected at the standard; "max." refers to the peak value expected at the standard over any test interval, not the maximum of the instrument's range; "meas" refers to the actual flow-weighted mean measured over any test interval.

## Measurement of Engine Parameters and Ambient Conditions

### § 1065.210 Work input and output sensors.

(a) *Application.* Use instruments as specified in this section to measure work inputs and outputs during engine operation. We recommend that you use sensors, transducers, and meters that meet the specifications in Table 1 of § 1065.205. Note that your overall systems for measuring work inputs and outputs must meet the linearity verifications in § 1065.307. We recommend that you measure work inputs and outputs where they cross the system boundary as shown in Figure 1 of this section. The system boundary is different for air-cooled engines than for liquid-cooled engines. If you choose to measure work before or after a work conversion, relative to the system boundary, use good engineering judgment to estimate any work-conversion losses in a way that avoids overestimation of total work. For example, if it is impractical to instrument the shaft of an exhaust turbine generating electrical work, you may decide to measure its converted electrical work. In this case, divide the electrical work by an accurate value of electrical generator efficiency ($\eta<1$), or

assume an efficiency of 1 ($\eta$=1), which would over-estimate brake-specific emissions. Do not underestimate the generator's efficiency because this would result in an under-estimation of brake-specific emissions. In all cases, ensure that you are able to accurately demonstrate compliance with the applicable standards.

BILLING CODE 6560–50–P

Figure 1 of §1065.210: Work inputs, outputs, and system boundaries for liquid-cooled and air-cooled engines.

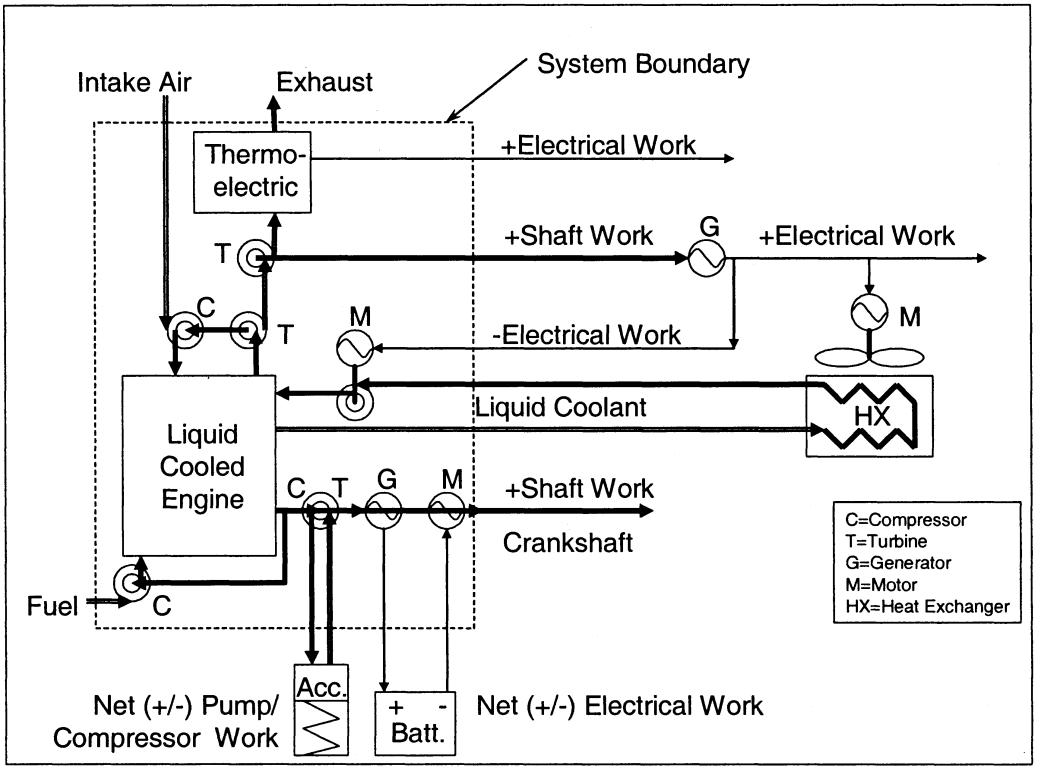


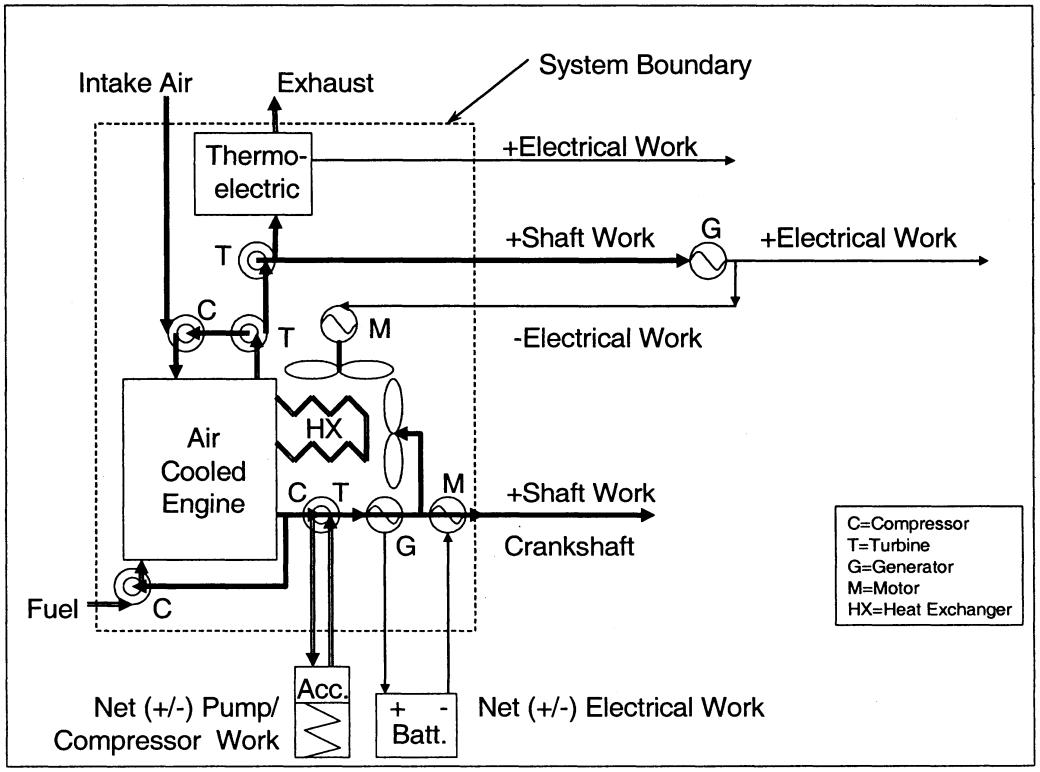

(b) *Shaft work.* Use speed and torque transducer outputs to calculate total work according to § 1065.650.

(1) *Speed.* Use a magnetic or optical shaft-position detector with a resolution of at least 60 counts per revolution, in combination with a frequency counter that rejects common-mode noise.

(2) *Torque.* You may use a variety of methods to determine engine torque. As needed, and based on good engineering judgment, compensate for torque induced by the inertia of accelerating and decelerating components connected to the flywheel, such as the drive shaft and dynamometer rotor. Use any of the following methods to determine engine torque:

(i) Measure torque by mounting a strain gage or similar instrument in-line between the engine and dynamometer.

(ii) Measure torque by mounting a strain gage or similar instrument on a lever arm connected to the dynamometer housing.

(iii) Calculate torque from internal dynamometer signals, such as armature current, as long as you calibrate this measurement as described in § 1065.310.

(c) *Electrical work.* Use a watt-hour meter output to calculate total work according to § 1065.650. Use a watt-hour meter that outputs active power (kW). Watt-hour meters typically combine a Wheatstone bridge voltmeter and a Hall-effect clamp-on ammeter into a single microprocessor-based instrument that analyzes and outputs several parameters, such as alternating or direct current voltage (V), current (A), power factor (pf), apparent power (VA), reactive power (VAR), and active power (W).

(d) *Pump, compressor or turbine work.* Use pressure transducer and flow-meter outputs to calculate total work according to § 1065.650. For flow meters, see § 1065.220 through § 1065.248.

### § 1065.215 Pressure transducers, temperature sensors, and dewpoint sensors.

(a) *Application.* Use instruments as specified in this section to measure pressure, temperature, and dewpoint.

(b) *Component requirements.* We recommend that you use pressure transducers, temperature sensors, and dewpoint sensors that meet the specifications in Table 1 of § 1065.205. Note that your overall systems for measuring pressure, temperature, and dewpoint must meet the calibration and verifications in § 1065.315.

(c) *Temperature.* For PM-balance environments or other precision temperature measurements over a narrow temperature range, we recommend thermistors. For other applications we recommend thermocouples that are not grounded to the thermocouple sheath. You may use other temperature sensors, such as resistive temperature detectors (RTDs).

(d) *Pressure.* Pressure transducers must be located in a temperature-controlled environment, or they must compensate for temperature changes over their expected operating range. Transducer materials must be compatible with the fluid being measured. For atmospheric pressure or other precision pressure measurements, we recommend either capacitance-type, quartz crystal, or laser-interferometer transducers. For other applications, we recommend either strain gage or capacitance-type pressure transducers. You may use other pressure-measurement instruments, such as manometers, where appropriate.

(e) *Dewpoint.* For PM-stabilization environments, we recommend chilled-surface hygrometers. For other applications, we recommend thin-film capacitance sensors. You may use other dewpoint sensors, such as a wet-bulb/dry-bulb psychrometer, where appropriate.

## Flow-Related Measurements

### § 1065.220 Fuel flow meter.

(a) *Application.* You may use fuel flow in combination with a chemical balance of carbon (or oxygen) between the fuel, inlet air, and raw exhaust to calculate raw exhaust flow as described in § 1065.650, as follows:

(1) Use the actual value of calculated raw exhaust flow rate in the following cases:

(i) For multiplying raw exhaust flow rate with continuously sampled concentrations.

(ii) For multiplying total raw exhaust flow with batch-sampled concentrations.

(2) In the following cases, you may use a fuel flow meter signal that does not give the actual value of raw exhaust, as long as it is linearly proportional to the exhaust molar flow rate's actual calculated value:

(i) For feedback control of a proportional sampling system, such as a partial-flow dilution system.

(ii) For multiplying with continuously sampled gas concentrations, if the same signal is used in a chemical-balance calculation to determine work from brake-specific fuel consumption and fuel consumed.

(b) *Component requirements.* We recommend that you use a fuel flow meter that meets the specifications in Table 1 of § 1065.205. We recommend a fuel flow meter that measures mass directly, such as one that relies on gravimetric or inertial measurement principles. This may involve using a meter with one or more scales for weighing fuel or using a Coriolis meter. Note that your overall system for measuring fuel flow must meet the linearity verification in § 1065.307 and the calibration and verifications in § 1065.320.

(c) *Recirculating fuel.* In any fuel-flow measurement, account for any fuel that bypasses the engine or returns from the engine to the fuel storage tank.

(d) *Flow conditioning.* For any type of fuel flow meter, condition the flow as needed to prevent wakes, eddies, circulating flows, or flow pulsations from affecting the accuracy or repeatability of the meter. You may accomplish this by using a sufficient length of straight tubing (such as a length equal to at least 10 pipe diameters) or by using specially designed tubing bends, straightening fins, or pneumatic pulsation dampeners to establish a steady and predictable velocity profile upstream of the meter.

### § 1065.225 Intake-air flow meter.

(a) *Application.* You may use an intake-air flow meter in combination with a chemical balance of carbon (or oxygen) between the fuel, inlet air, and raw exhaust to calculate raw exhaust flow as described in § 1065.650, as follows:

(1) Use the actual value of calculated raw exhaust in the following cases:

(i) For multiplying raw exhaust flow rate with continuously sampled concentrations.

(ii) For multiplying total raw exhaust flow with batch-sampled concentrations.

(2) In the following cases, you may use an intake-air flow meter signal that does not give the actual value of raw exhaust, as long as it is linearly proportional to the exhaust flow rate's actual calculated value:

(i) For feedback control of a proportional sampling system, such as a partial-flow dilution system.

(ii) For multiplying with continuously sampled gas concentrations, if the same signal is used in a chemical-balance calculation to determine work from brake-specific fuel consumption and fuel consumed.

(b) *Component requirements.* We recommend that you use an intake-air flow meter that meets the specifications in Table 1 of § 1065.205. This may include a laminar flow element, an ultrasonic flow meter, a subsonic venturi, a thermal-mass meter, an

averaging Pitot tube, or a hot-wire anemometer. Note that your overall system for measuring intake-air flow must meet the linearity verification in § 1065.307 and the calibration in § 1065.325.

(c) *Flow conditioning.* For any type of intake-air flow meter, condition the flow as needed to prevent wakes, eddies, circulating flows, or flow pulsations from affecting the accuracy or repeatability of the meter. You may accomplish this by using a sufficient length of straight tubing (such as a length equal to at least 10 pipe diameters) or by using specially designed tubing bends, orifice plates or straightening fins to establish a predictable velocity profile upstream of the meter.

**§ 1065.230 Raw exhaust flow meter.**

(a) *Application.* You may use measured raw exhaust flow, as follows:

(1) Use the actual value of calculated raw exhaust in the following cases:

(i) Multiply raw exhaust flow rate with continuously sampled concentrations.

(ii) Multiply total raw exhaust with batch sampled concentrations.

(2) In the following cases, you may use a raw exhaust flow meter signal that does not give the actual value of raw exhaust, as long as it is linearly proportional to the exhaust flow rate's actual calculated value:

(i) For feedback control of a proportional sampling system, such as a partial-flow dilution system.

(ii) For multiplying with continuously sampled gas concentrations, if the same signal is used in a chemical-balance calculation to determine work from brake-specific fuel consumption and fuel consumed.

(b) *Component requirements.* We recommend that you use a raw-exhaust flow meter that meets the specifications in Table 1 of § 1065.205. This may involve using an ultrasonic flow meter, a subsonic venturi, an averaging Pitot tube, a hot-wire anemometer, or other measurement principle. This would generally not involve a laminar flow element or a thermal-mass meter. Note that your overall system for measuring raw exhaust flow must meet the linearity verification in § 1065.307 and the calibration and verifications in § 1065.330. Any raw-exhaust meter must be designed to appropriately compensate for changes in the raw exhaust's thermodynamic, fluid, and compositional states.

(c) *Flow conditioning.* For any type of raw exhaust flow meter, condition the flow as needed to prevent wakes, eddies, circulating flows, or flow pulsations from affecting the accuracy or repeatability of the meter. You may accomplish this by using a sufficient length of straight tubing (such as a length equal to at least 10 pipe diameters) or by using specially designed tubing bends, orifice plates or straightening fins to establish a predictable velocity profile upstream of the meter.

(d) *Exhaust cooling.* You may cool raw exhaust upstream of a raw-exhaust flow meter, as long as you observe all the following provisions:

(1) Do not sample PM downstream of the cooling.

(2) If cooling causes exhaust temperatures above 202 °C to decrease to below 180 °C, do not sample NMHC downstream of the cooling for compression-ignition engines, 2-stroke spark-ignition engines, and 4-stroke spark ignition engines below 19 kW.

(3) If cooling causes aqueous condensation, do not sample $NO_X$ downstream of the cooling unless the cooler meets the performance verification in § 1065.376.

(4) If cooling causes aqueous condensation before the flow reaches a flow meter, measure dewpoint, $T_{dew}$ and pressure, $p_{total}$ at the flow meter inlet. Use these values in emission calculations according to § 1065.650.

**§ 1065.240 Dilution air and diluted exhaust flow meters.**

(a) *Application.* Use a diluted exhaust flow meter to determine instantaneous diluted exhaust flow rates or total diluted exhaust flow over a test interval. You may use the difference between a diluted exhaust flow meter and a dilution air meter to calculate raw exhaust flow rates or total raw exhaust flow over a test interval.

(b) *Component requirements.* We recommend that you use a diluted exhaust flow meter that meets the specifications in Table 1 of § 1065.205. Note that your overall system for measuring diluted exhaust flow must meet the linearity verification in § 1065.307 and the calibration and verifications in § 1065.340 and § 1065.341. You may use the following meters:

(1) For constant-volume sampling (CVS) of the total flow of diluted exhaust, you may use a critical-flow venturi (CFV) or multiple critical-flow venturis arranged in parallel, a positive-displacement pump (PDP), a subsonic venturi (SSV), or an ultrasonic flow meter (UFM). Combined with an upstream heat exchanger, either a CFV or a PDP will also function as a passive flow controller in a CVS system. However, you may also combine any flow meter with any active flow control system to maintain proportional sampling of exhaust constituents. You may control the total flow of diluted exhaust, or one or more sample flows, or a combination of these flow controls to maintain proportional sampling.

(2) For any other dilution system, you may use a laminar flow element, an ultrasonic flow meter, a subsonic venturi, a critical-flow venturi or multiple critical-flow venturis arranged in parallel, a positive-displacement meter, a thermal-mass meter, an averaging Pitot tube, or a hot-wire anemometer.

(c) *Flow conditioning.* For any type of diluted exhaust flow meter, condition the flow as needed to prevent wakes, eddies, circulating flows, or flow pulsations from affecting the accuracy or repeatability of the meter. For some meters, you may accomplish this by using a sufficient length of straight tubing (such as a length equal to at least 10 pipe diameters) or by using specially designed tubing bends, orifice plates or straightening fins to establish a predictable velocity profile upstream of the meter.

(d) *Exhaust cooling.* You may cool diluted exhaust upstream of a raw-exhaust flow meter, as long as you observe all the following provisions:

(1) Do not sample PM downstream of the cooling.

(2) If cooling causes exhaust temperatures above 202 °C to decrease to below 180 °C, do not sample NMHC downstream of the cooling for compression-ignition engines, 2-stroke spark-ignition engines, and 4-stroke spark ignition engines below 19 kW.

(3) If cooling causes aqueous condensation, do not sample $NO_X$ downstream of the cooling unless the cooler meets the performance verification in § 1065.376.

(4) If cooling causes aqueous condensation before the flow reaches a flow meter, measure dewpoint, $T_{dew}$ and pressure, $p_{total}$ at the flow meter inlet. Use these values in emission calculations according to § 1065.650.

**§ 1065.245 Sample flow meter for batch sampling.**

(a) *Application.* Use a sample flow meter to determine sample flow rates or total flow sampled into a batch sampling system over a test interval. You may use the difference between a diluted exhaust sample flow meter and a dilution air meter to calculate raw exhaust flow rates or total raw exhaust flow over a test interval.

(b) *Component requirements.* We recommend that you use a sample flow meter that meets the specifications in

Table 1 of § 1065.205. This may involve a laminar flow element, an ultrasonic flow meter, a subsonic venturi, a critical-flow venturi or multiple critical-flow venturis arranged in parallel, a positive-displacement meter, a thermal-mass meter, an averaging Pitot tube, or a hot-wire anemometer. Note that your overall system for measuring sample flow must meet the linearity verification in § 1065.307. For the special case where CFVs are used for both the diluted exhaust and sample-flow measurements and their upstream pressures and temperatures remain similar during testing, you do not have to quantify the flow rate of the sample-flow CFV. In this special case, the sample-flow CFV inherently flow-weights the batch sample relative to the diluted exhaust CFV.

(c) *Flow conditioning.* For any type of sample flow meter, condition the flow as needed to prevent wakes, eddies, circulating flows, or flow pulsations from affecting the accuracy or repeatability of the meter. For some meters, you may accomplish this by using a sufficient length of straight tubing (such as a length equal to at least 10 pipe diameters) or by using specially designed tubing bends, orifice plates or straightening fins to establish a predictable velocity profile upstream of the meter.

### § 1065.248 Gas divider.

(a) *Application.* You may use a gas divider to blend calibration gases.

(b) *Component requirements.* Use a gas divider that blends gases to the specifications of § 1065.750 and to the flow-weighted concentrations expected during testing. You may use critical-flow gas dividers, capillary-tube gas dividers, or thermal-mass-meter gas dividers. Note that your overall gas-divider system must meet the linearity verification in § 1065.307.

## CO and $CO_2$ Measurements

### § 1065.250 Nondispersive infra-red analyzer.

(a) *Application.* Use a nondispersive infra-red (NDIR) analyzer to measure CO and CO2 concentrations in raw or diluted exhaust for either batch or continuous sampling.

(b) *Component requirements.* We recommend that you use an NDIR analyzer that meets the specifications in Table 1 of § 1065.205. Note that your NDIR-based system must meet the calibration and verifications in § 1065.350 and § 1065.355 and it must also meet the linearity verification in § 1065.307. You may use an NDIR analyzer that has compensation algorithms that are functions of other gaseous measurements and the engine's known or assumed fuel properties. The target value for any compensation algorithm is 0.0% (that is, no bias high and no bias low), regardless of the uncompensated signal's bias.

## Hydrocarbon Measurements

### § 1065.260 Flame-ionization detector.

(a) *Application.* Use a flame-ionization detector (FID) analyzer to measure hydrocarbon concentrations in raw or diluted exhaust for either batch or continuous sampling. Determine hydrocarbon concentrations on a carbon number basis of one, $C_1$. Determine methane and nonmethane hydrocarbon values as described in paragraph (e) of this section. See subpart I of this part for special provisions that apply to measuring hydrocarbons when testing with oxygenated fuels.

(b) *Component requirements.* We recommend that you use a FID analyzer that meets the specifications in Table 1 of § 1065.205. Note that your FID-based system for measuring THC, THCE, or $CH_4$ must meet all of the verifications for hydrocarbon measurement in subpart D of this part, and it must also meet the linearity verification in § 1065.307. You may use a FID that has compensation algorithms that are functions of other gaseous measurements and the engine's known or assumed fuel properties. The target value for any compensation algorithm is 0.0% (that is, no bias high and no bias low), regardless of the uncompensated signal's bias.

(c) *Heated FID analyzers.* For diesel-fueled engines, two-stroke spark-ignition engines, and four-stroke spark-ignition engines below 19 kW, you must use heated FID analyzers that maintain all surfaces that are exposed to emissions at a temperature of (191 ± 11) °C.

(d) *FID fuel and burner air.* Use FID fuel and burner air that meet the specifications of § 1065.750. Do not allow the FID fuel and burner air to mix before entering the FID analyzer to ensure that the FID analyzer operates with a diffusion flame and not a premixed flame.

(e) *Methane.* FID analyzers measure total hydrocarbons (THC). To determine nonmethane hydrocarbons (NMHC), quantify methane, $CH_4$, either with a nonmethane cutter and a FID analyzer as described in § 1065.265, or with a gas chromatograph as described in § 1065.267. Instead of measuring methane, you may assume that 2% of measured total hydrocarbons is methane, as described in § 1065.660. For a FID analyzer used to determine NMHC, determine its response factor to $CH_4$, $RF_{CH4}$, as described in § 1065.360. Note that NMHC-related calculations are described in § 1065.660.

### § 1065.265 Nonmethane cutter.

(a) *Application.* You may use a nonmethane cutter to measure $CH_4$ with a FID analyzer. A nonmethane cutter oxidizes all nonmethane hydrocarbons to $CO_2$ and $H_2O$. You may use a nonmethane cutter for raw or diluted exhaust for batch or continuous sampling.

(b) *System performance.* Determine nonmethane-cutter performance as described in § 1065.365 and use the results to calculate NMHC emission in § 1065.660.

(c) *Configuration.* Configure the nonmethane cutter with a bypass line for the verification described in § 1065.365.

(d) *Optimization.* You may optimize a nonmethane cutter to maximize the penetration of $CH_4$ and the oxidation of all other hydrocarbons. You may humidify a sample and you may dilute a sample with purified air or oxygen ($O_2$) upstream of the nonmethane cutter to optimize its performance. You must account for any sample humidification and dilution in emission calculations.

### § 1065.267 Gas chromatograph.

(a) *Application.* You may use a gas chromatograph to measure $CH_4$ concentrations of diluted exhaust for batch sampling. While you may also use a nonmethane cutter to measure $CH_4$, as described in § 1065.265, use a reference procedure based on a gas chromatograph for comparison with any proposed alternate measurement procedure under § 1065.10.

(b) *Component requirements.* We recommend that you use a gas chromatograph that meets the specifications in Table 1 of § 1065.205, and it must also meet the linearity verification in § 1065.307.

## $NO_X$ Measurements

### § 1065.270 Chemiluminescent detector.

(a) *Application.* You may use a chemiluminescent detector (CLD) to measure $NO_X$ concentration in raw or diluted exhaust for batch or continuous sampling. We generally accept a CLD for $NO_X$ measurement, even though it measures only NO and $NO_2$, when coupled with an $NO_2$-to-NO converter, since conventional engines and aftertreatment systems do not emit significant amounts of $NO_X$ species other than NO and $NO_2$. Measure other $NO_X$ species if required by the standard-setting part. While you may also use other instruments to measure $NO_X$, as

described in § 1065.272, use a reference procedure based on a chemiluminescent detector for comparison with any proposed alternate measurement procedure under § 1065.10.

(b) *Component requirements.* We recommend that you use a CLD that meets the specifications in Table 1 of § 1065.205. Note that your CLD-based system must meet the quench verification in § 1065.370 and it must also meet the linearity verification in § 1065.307. You may use a heated or unheated CLD, and you may use a CLD that operates at atmospheric pressure or under a vacuum. You may use a CLD that has compensation algorithms that are functions of other gaseous measurements and the engine's known or assumed fuel properties. The target value for any compensation algorithm is 0.0% (that is, no bias high and no bias low), regardless of the uncompensated signal's bias.

(c) *$NO_2$-to-NO converter.* Place upstream of the CLD an internal or external $NO_2$-to-NO converter that meets the verification in § 1065.378. Configure the converter with a bypass to facilitate this verification.

(d) *Humidity effects.* You must maintain all CLD temperatures to prevent aqueous condensation. To remove humidity from a sample upstream of a CLD, use one of the following configurations:

(1) Connect a CLD downstream of any dryer or chiller that is downstream of an $NO_2$-to-NO converter that meets the verification in § 1065.378.

(2) Connect a CLD downstream of any dryer or thermal chiller that meets the verification in § 1065.376.

(e) *Response time.* You may use a heated CLD to improve CLD response time.

#### § 1065.272 Nondispersive ultraviolet analyzer.

(a) *Application.* You may use a nondispersive ultraviolet (NDUV) analyzer to measure $NO_X$ concentration in raw or diluted exhaust for batch or continuous sampling. We generally accept an NDUV for $NO_X$ measurement, even though it measures only NO and $NO_2$, since conventional engines and aftertreatment systems do not emit significant amounts of other $NO_X$ species. Measure other $NO_X$ species if required by the standard-setting part.

(b) *Component requirements.* We recommend that you use an NDUV analyzer that meets the specifications in Table 1 of § 1065.205. Note that your NDUV-based system must meet the verifications in § 1065.372 and it must also meet the linearity verification in § 1065.307. You may use a NDUV analyzer that has compensation algorithms that are functions of other gaseous measurements and the engine's known or assumed fuel properties. The target value for any compensation algorithm is 0.0% (that is, no bias high and no bias low), regardless of the uncompensated signal's bias.

(c) *$NO_2$-to-NO converter.* If your NDUV analyzer measures only NO, place upstream of the NDUV analyzer an internal or external $NO_2$-to-NO converter that meets the verification in § 1065.378. Configure the converter with a bypass to facilitate this verification.

(d) *Humidity effects.* You must maintain NDUV temperature to prevent aqueous condensation, unless you use one of the following configurations:

(1) Connect an NDUV downstream of any dryer or chiller that is downstream of an $NO_2$-to-NO converter that meets the verification in § 1065.378.

(2) Connect an NDUV downstream of any dryer or thermal chiller that meets the verification in § 1065.376.

### $O_2$ Measurements

#### § 1065.280 Paramagnetic and magnetopneumatic $O_2$ detection analyzers.

(a) *Application.* You may use a paramagnetic detection (PMD) or magnetopneumatic detection MPD) analyzer to measure $O_2$ concentration in raw or diluted exhaust for batch or continuous sampling. You may use $O_2$ measurements with intake air or fuel flow measurements to calculate exhaust flow rate according to § 1065.650.

(b) *Component requirements.* We recommend that you use a PMD/MPD analyzer that meets the specifications in Table 1 of § 1065.205. Note that it must meet the linearity verification in § 1065.307. You may use a PMD/MPD that has compensation algorithms that are functions of other gaseous measurements and the engine's known or assumed fuel properties. The target value for any compensation algorithm is 0.0% (that is, no bias high and no bias low), regardless of the uncompensated signal's bias.

### Air-to-Fuel Ratio Measurements

#### § 1065.284 Zirconia ($ZrO_2$) analyzer.

(a) *Application.* You may use a zirconia ($ZrO_2$) analyzer to measure air-to-fuel ratio in raw exhaust for continuous sampling. You may use $O_2$ measurements with intake air or fuel flow measurements to calculate exhaust flow rate according to § 1065.650.

(b) *Component requirements.* We recommend that you use a $ZrO_2$ analyzer that meets the specifications in Table 1 of § 1065.205. Note that your $ZrO_2$-based system must meet the linearity verification in § 1065.307. You may use a Zirconia analyzer that has compensation algorithms that are functions of other gaseous measurements and the engine's known or assumed fuel properties. The target value for any compensation algorithm is 0.0% (that is, no bias high and no bias low), regardless of the uncompensated signal's bias.

### PM Measurements

#### § 1065.290 PM gravimetric balance.

(a) *Application.* Use a balance to weigh net PM on a sample medium for laboratory testing.

(b) *Component requirements.* We recommend that you use a balance that meets the specifications in Table 1 of § 1065.205. Note that your balance-based system must meet the linearity verification in § 1065.307. If the balance uses internal calibration weights for routine spanning and linearity verifications, the calibration weights must meet the specifications in § 1065.790. While you may also use an inertial balance to measure PM, as described in § 1065.295, use a reference procedure based on a gravimetric balance for comparison with any proposed alternate measurement procedure under § 1065.10.

(c) *Pan design.* We recommend that you use a balance pan designed to minimize corner loading of the balance, as follows:

(1) Use a pan that centers the PM sample on the weighing pan. For example, use a pan in the shape of a cross that has upswept tips that center the PM sample media on the pan.

(2) Use a pan that positions the PM sample as low as possible.

(d) *Balance configuration.* Configure the balance for optimum settling time and stability at your location.

#### § 1065.295 PM inertial balance for field-testing analysis.

(a) *Application.* You may use an inertial balance to quantify net PM on a sample medium for field testing.

(b) *Component requirements.* We recommend that you use a balance that meets the specifications in Table 1 of § 1065.205. Note that your balance-based system must meet the linearity verification in § 1065.307. If the balance uses an internal calibration process for routine spanning and linearity verifications, the process must be NIST-traceable. You may use an inertial PM balance that has compensation algorithms that are functions of other gaseous measurements and the engine's known or assumed fuel properties. The target value for any compensation algorithm is 0.0% (that is, no bias high

and no bias low), regardless of the uncompensated signal's bias.

## Subpart D—Calibrations and Verifications

### § 1065.301 Overview and general provisions.

(a) This subpart describes required and recommended calibrations and verifications of measurement systems. See subpart C of this part for specifications that apply to individual instruments.

(b) You must generally use complete measurement systems when performing calibrations or verifications in this subpart. For example, this would generally involve evaluating instruments based on values recorded with the complete system you use for recording test data, including analog-to-digital converters. For some calibrations and verifications, we may specify that you disconnect part of the measurement system to introduce a simulated signal.

(c) If we do not specify a calibration or verification for a portion of a measurement system, calibrate that portion of your system and verify its performance at a frequency consistent with any recommendations from the measurement-system manufacturer, consistent with good engineering judgment.

(d) Use NIST-traceable standards to the tolerances we specify for calibrations and verifications. Where we specify the need to use NIST-traceable standards, you may alternatively ask for our approval to use international standards that are not NIST-traceable.

### § 1065.303 Summary of required calibration and verifications.

The following table summarizes the required and recommended calibrations and verifications described in this subpart and indicates when these have to be performed:

TABLE 1 OF § 1065.303.—SUMMARY OF REQUIRED CALIBRATION AND VERIFICATIONS

| Type of calibration or verification | Minimum frequency [a] |
|---|---|
| § 1065.305: accuracy, repeatability and noise | *Accuracy:* Not required, but recommended for initial installation.<br>*Repeatability:* Not required, but recommended for initial installation.<br>*Noise:* Not required, but recommended for initial installation. |
| § 1065.307: linearity | *Speed:* Upon initial installation, within 370 days before testing and after major maintenance.<br>*Torque:* Upon initial installation, within 370 days before testing and after major maintenance.<br>*Electrical power:* Upon initial installation, within 370 days before testing and after major maintenance.<br>*Clean gas and diluted exhaust flows:* Upon initial installation, within 370 days before testing and after major maintenance, unless flow is verified by propane check or by carbon or oxygen balance.<br>*Raw exhaust flow:* Upon initial installation, within 185 days before testing and after major maintenance, unless flow is verified by propane check or by carbon or oxygen balance.<br>*Gas analyzers:* Upon initial installation, within 35 days before testing and after major maintenance.<br>*PM balance:* Upon initial installation, within 370 days before testing and after major maintenance.<br>*Stand-alone pressure and temperature:* Upon initial installation, within 370 days before testing and after major maintenance. |
| § 1065.308: Continuous analyzer system response and recording. | Upon initial installation, after system reconfiguration, and after major maintenance. |
| § 1065.309: Continuous analyzer uniform response. | Upon initial installation, after system reconfiguration, and after major maintenance. |
| § 1065.310: torque | Upon initial installation and after major maintenance. |
| § 1065.315: pressure, temperature, dewpoint | Upon initial installation and after major maintenance. |
| § 1065.320: fuel flow | Upon initial installation and after major maintenance. |
| § 1065.325: intake flow | Upon initial installation and after major maintenance. |
| § 1065.330: exhaust flow | Upon initial installation and after major maintenance. |
| § 1065.340: diluted exhaust flow (CVS) | Upon initial installation and after major maintenance. |
| § 1065.341: CVS and batch sampler verification | Upon initial installation, within 35 days before testing, and after major maintenance. |
| § 1065.345: vacuum leak | Before each laboratory test according to subpart F of this part and before each field test according to subpart J of this part. |
| § 1065.350: $CO_2$ NDIR$H_2O$ interference | Upon initial installation and after major maintenance. |
| § 1065.355: CO NDIR$CO_2$ and $H_2O$interference | Upon initial installation and after major maintenance. |
| § 1065.360: FID optimization, etc. | *Calibrate, optimize, and determine $CH_4$ response:* upon initial installation and after major maintenance.<br>*Verify $CH_4$ response:* upon initial installation, within 185 days before testing, and after major maintenance. |
| § 1065.362: raw exhaustFID $O_2$ interference | Upon initial installation, after FID optimization according to § 1065.360, and after major maintenance. |
| § 1065.365:nonmethane cutter penetration | Upon initial installation, within 185 days before testing, and after major maintenance. |
| § 1065.370: CLD $CO_2$ and $H_2O$ quench | Upon initial installation and after major maintenance. |
| § 1065.372: NDUV HC and $H_2O$ interference | Upon initial installation and after major maintenance. |
| § 1065.376: chiller $NO_2$ penetration | Upon initial installation and after major maintenance. |
| § 1065.378: $NO_2$-to-NO converter conversion | Upon initial installation, within 35 days before testing, and after major maintenance. |
| § 1065.390: PM balance and weighing | *Independent verification:* upon initial installation, within 370 days before testing, and after major maintenance.<br>*Zero, span, and reference sample verifications:* within 12 hours of weighing, and after major maintenance. |
| § 1065.395: Inertial PM balance and weighing | Independent verification: upon initial installation, within 370 days before testing, and after major maintenance. |

TABLE 1 OF § 1065.303.—SUMMARY OF REQUIRED CALIBRATION AND VERIFICATIONS—Continued

| Type of calibration or verification | Minimum frequency [a] |
|---|---|
| | *Other verifications:* upon initial installation and after major maintenance. |

[a] Perform calibrations and verifications more frequently, according to measurement system manufacturer instructions and good engineering judgment.

**§ 1065.305 Verifications for accuracy, repeatability, and noise.**

(a) This section describes how to determine the accuracy, repeatability, and noise of an instrument. Table 1 of § 1065.205 specifies recommended values for individual instruments.

(b) We do not require you to verify instrument accuracy, repeatability, or noise.

However, it may be useful to consider these verifications to define a specification for a new instrument, to verify the performance of a new instrument upon delivery, or to troubleshoot an existing instrument.

(c) In this section we use the letter ''y'' to denote a generic measured quantity, the superscript over-bar to denote an arithmetic mean (such as $\bar{y}$), and the subscript ''$_{ref}$'' to denote the reference quantity being measured.

(d) Conduct these verifications as follows:

(1) Prepare an instrument so it operates at its specified temperatures, pressures, and flows. Perform any instrument linearization or calibration procedures prescribed by the instrument manufacturer.

(2) Zero the instrument as you would before an emission test by introducing a zero signal. Depending on the instrument, this may be a zero-concentration gas, a reference signal, a set of reference thermodynamic conditions, or some combination of these. For gas analyzers, use a zero gas that meets the specifications of § 1065.750.

(3) Span the instrument as you would before an emission test by introducing a span signal. Depending on the instrument, this may be a span-concentration gas, a reference signal, a set of reference thermodynamic conditions, or some combination of these. For gas analyzers, use a span gas that meets the specifications of § 1065.750.

(4) Use the instrument to quantify a NIST-traceable reference quantity, $y_{ref}$. For gas analyzers the reference gas must meet the specifications of § 1065.750. Select a reference quantity near the mean value expected during testing. For all gas analyzers, use a quantity near the flow-weighted mean concentration expected at the standard or expected during testing, whichever is greater. For a noise verfication, use the same zero gas from paragraph (e) of this section as the reference quantity. In all cases, allow time for the instrument to stabilize while it measures the reference quantity. Stabilization time may include time to purge an instrument and time to account for its response.

(5) Sample and record values for 30 seconds, record the arithmetic mean, $\bar{y}_i$, and record the standard deviation, $\sigma_i$, of the recorded values. Refer to § 1065.602 for an example of calculating arithmetic mean and standard deviation.

(6) Also, if the reference quantity is not absolutely constant, which might be the case with a reference flow, sample and record values of $y_{refi}$ for 30 seconds and record the arithmetic mean of the values, $\bar{y}_{ref}$. Refer to § 1065.602 for an example of calculating arithmetic mean.

(7) Subtract the reference value, $y_{ref}$ (or $\bar{y}_{ref}$), from the arithmetic mean, $\bar{y}_i$. Record this value as the error, $\varepsilon_i$.

(8) Repeat the steps specified in paragraphs (d)(2) through (6) of this section until you have ten arithmetic means ($\bar{y}_1$, $\bar{y}_2$, $\bar{y}_i$, * * * $\bar{y}_{10}$), ten standard deviations, ($\sigma_1$, $\sigma_2$, $\sigma_i$,* * *$\sigma_{10}$), and ten errors ($\varepsilon_1$, $\varepsilon_2$, $\varepsilon_i$, * * * $\varepsilon_{10}$).

(9) Use the following values to quantify your measurements:

(i) *Accuracy.* Instrument accuracy is the absolute difference between the reference quantity, $y_{ref}$ (or $\bar{y}_{ref}$), and the arithmetic mean of the ten $\bar{y}_i$, $\bar{y}$ values. Refer to the example of an accuracy calculation in § 1065.602. We recommend that instrument accuracy be within the specifications in Table 1 of § 1065.205.

(ii) *Repeatability.* Repeatability is two times the standard deviation of the ten errors (that is, repeatability = $2 \cdot \sigma_\varepsilon$). Refer to the example of a standard-deviation calculation in § 1065.602. We recommend that instrument repeatability be within the specifications in Table 1 of § 1065.205.

(iii) *Noise.* Noise is two times the root-mean-square of the ten standard deviations (that is, noise = $2 \cdot rms_\sigma$) when the reference signal is a zero-quantity signal. Refer to the example of a root-mean-square calculation in § 1065.602. We recommend that instrument noise be within the specifications in Table 1 of § 1065.205. Use this value in the noise correction specified in § 1065.657.

(10) You may use a measurement instrument that does not meet the accuracy, repeatability, or noise specifications in Table 1 of § 1065.205, as long as you meet the following criteria:

(i) Your measurement systems meet all the other required calibration, verification, and validation specifications in subparts D, F, and J of this part, as applicable.

(ii) The measurement deficiency does not adversely affect your ability to demonstrate compliance with the applicable standards.

**§ 1065.307 Linearity verification.**

(a) *Scope and frequency.* Perform a linearity verification on each measurement system listed in Table 1 of this section at least as frequently as indicated in the table, consistent with measurement system manufacturer recommendations and good engineering judgment. Note that this linearity verification may replace requirements we previously referred to as ''calibrations''. The intent of a linearity verification is to determine that a measurement system responds proportionally over the measurement range of interest. A linearity verification generally consists of introducing a series of at least 10 reference values to a measurement system. The measurement system quantifies each reference value. The measured values are then collectively compared to the reference values by using a least squares linear regression and the linearity criteria specified in Table 1 of this section.

(b) *Performance requirements.* If a measurement system does not meet the applicable linearity criteria in Table 1 of this section, correct the deficiency by re-calibrating, servicing, or replacing components as needed. Before you may use a measurement system that does not meet linearity criteria, you must demonstrate to us that the deficiency does not adversely affect your ability to demonstrate compliance with the applicable standards.

(c) *Procedure.* Use the following linearity verification protocol, or use good engineering judgment to develop a different protocol that satisfies the

intent of this section, as described in paragraph (a) of this section:

(1) In this paragraph (c), we use the letter ''y'' to denote a generic measured quantity, the superscript over-bar to denote an arithmetic mean (such as $\bar{y}$), and the subscript ''$_{ref}$'' to denote the known or reference quantity being measured.

(2) Operate a measurement system at its specified temperatures, pressures, and flows. This may include any specified adjustment or periodic calibration of the measurement system.

(3) Zero the instrument as you would before an emission test by introducing a zero signal. Depending on the instrument, this may be a zero-concentration gas, a reference signal, a set of reference thermodynamic conditions, or some combination of these. For gas analyzers, use a zero gas that meets the specifications of § 1065.750 and introduce it directly at the analyzer port.

(4) Span the instrument as you would before an emission test by introducing a span signal. Depending on the instrument, this may be a span-concentration gas, a reference signal, a set of reference thermodynamic conditions, or some combination of these. For gas analyzers, use a span gas that meets the specifications of § 1065.750 and introduce it directly at the analyzer port.

(5) After spanning the instrument, check zero with the same signal you used in paragraph (c)(3) of this section. Based on the zero reading, use good engineering judgment to determine whether or not to rezero and or re-span the instrument before proceeding to the next step.

(6) Use instrument manufacturer recommendations and good engineering judgment to select at least 10 reference values, $y_{refi}$, that are within the range from zero to the highest values expected during emission testing. We recommend selecting a zero reference signal as one of the reference values of the linearity verification.

(7) Use instrument manufacturer recommendations and good engineering judgment to select the order in which you will introduce the series of reference values. For example you may select the reference values randomly to avoid correlation with previous measurements, you may select reference values in ascending or descending order to avoid long settling times of reference signals, or as another example you may select values to ascend and then descend which might incorporate the effects of any instrument hysteresis into the linearity verification.

(8) Generate reference quantities as described in paragraph (d) of this section. For gas analyzers, use gas concentrations known to be within the specifications of § 1065.750 and introduce them directly at the analyzer port.

(9) Introduce a reference signal to the measurement instrument.

(10) Allow time for the instrument to stabilize while it measures the reference value. Stabilization time may include time to purge an instrument and time to account for its response.

(11) At a recording frequency of at least f Hz, specified in Table 1 of § 1065.205, measure the reference value for 30 seconds and record the arithmetic mean of the recorded values, $\bar{y}_i$. Refer to § 1065.602 for an example of calculating an arithmetic mean.

(12) Repeat steps in paragraphs (c)(9) through (11) of this section until all reference quantities are measured.

(13) Use the arithmetic means $y_i$, and reference values, $y_{refi}$ , to calculate least-squares linear regression parameters and statistical values to compare to the minimum performance criteria specified in Table 1 of this section. Use the calculations described in § 1065.602.

(d) *Reference signals.* This paragraph (d) describes recommended methods for generating reference values for the linearity-verification protocol in paragraph (c) of this section. Use reference values that simulate actual values, or introduce an actual value and measure it with a reference-measurement system. In the latter case, the reference value is the value reported by the reference-measurement system. Reference values and reference-measurement systems must be NIST-traceable. We recommend using calibration reference quantities that are NIST-traceable within 0.5% uncertainty, if not specified otherwise in other sections of this part 1065. Use the following recommended methods to generate reference values or use good engineering judgment to select a different reference:

(1) *Engine speed.* Run the engine or dynamometer at a series of steady-state speeds and use a strobe, a photo tachometer, or a laser tachometer to record reference speeds.

(2) *Engine torque.* Use a series of calibration weights and a calibration lever arm to simulate engine torque. You may instead use the engine or dynamometer itself to generate a nominal torque that is measured by a reference load cell or proving ring in series with the torque-measurement system. In this case use the reference load cell measurement as the reference value. Refer to § 1065.310 for a torque-calibration procedure similar to the linearity verification in this section.

(3) *Electrical work.* Use a controlled source of current and a watt-hour standard reference meter. Complete calibration systems that contain a current source and a reference watt-hour meter are commonly used in the electrical power distribution industry and are therefore commercially available.

(4) *Fuel rate.* Operate the engine at a series of constant fuel-flow rates or re-circulate fuel back to a tank through the fuel flow meter at different flow rates. Use a gravimetric reference measurement (such as a scale, balance, or mass comparator) at the inlet to the fuel-measurement system. Use a stopwatch or timer to measure the time intervals over which reference masses of fuel are introduced to the fuel measurement system. The reference fuel mass divided by the time interval is the reference fuel flow rate.

(5) *Flow rates—inlet air, dilution air, diluted exhaust, raw exhaust, or sample flow.* Use a reference flow meter with a blower or pump to simulate flow rates. Use a restrictor, diverter valve, a variable-speed blower or a variable-speed pump to control the range of flow rates. Use the reference meter's response as the reference values.

(i) *Reference flow meters.* Because the flow range requirements for these various flows are large, we allow a variety of reference meters. For example, for diluted exhaust flow for a full-flow dilution system, we recommend a reference subsonic venturi flow meter with a restrictor valve and a blower to simulate flow rates. For inlet air, dilution air, diluted exhaust for partial-flow dilution, raw exhaust, or sample flow, we allow reference meters such as critical flow orifices, critical flow venturis, laminar flow elements, master mass flow standards, or Roots meters. Make sure the reference meter is calibrated by the flow-meter manufacturer and its calibration is NIST-traceable. If you use the difference of two flow measurements to determine a net flow rate, you may use one of the measurements as a reference for the other.

(ii) *Reference flow values.* Because the reference flow is not absolutely constant, sample and record values of $\dot{n}_{refi}$ for 30 seconds and use the arithmetic mean of the values, $\bar{\dot{n}}_{ref}$, as the reference value. Refer to § 1065.602 for an example of calculating arithmetic mean.

(6) *Gas division.* Use one of the two reference signals: (i) At the outlet of the gas-division system, connect a gas analyzer that meets the linearity

verification described in this section and has not been linearized with the gas divider being verified. For example, verify the linearity of an analyzer using a series of reference analytical gases directly from compressed gas cylinders that meet the specifications of § 1065.750. We recommend using a FID analyzer or a PMD/MPD $O_2$ analyzer because of their inherent linearity. Operate this analyzer consistent with how you would operate it during an emission test. Connect a span gas to the gas-divider inlet. Use the gas-division system to divide the span gas with purified air or nitrogen. Select gas divisions that you typically use. Use a selected gas division as the measured value. Use the analyzer response divided by the span gas concentration as the reference gas-division value. Because the instrument response is not absolutely constant, sample and record values of $x_{refi}$ for 30 seconds and use the arithmetic mean of the values $\bar{x}_{refi}$, as the reference value. Refer to § 1065.602 for an example of calculating arithmetic mean.

(ii) Using good engineering judgment and gas divider manufacturer recommendations, use one or more reference flow meters to verify the measured flow rates of the gas divider.

(7) *Continuous constituent concentration.* For reference values, use a series of gas cylinders of known gas concentration or use a gas-division system that is known to be linear with a span gas. Gas cylinders, gas-division systems, and span gases that you use for reference values must meet the specifications of § 1065.750.

Table 1 of §1065.307–Measurement systems that require linearity verifications

| Measurement System | Quantity | Minimum verification frequency[a] | Linearity Criteria | | | |
|---|---|---|---|---|---|---|
| | | | $\lvert a_0 \rvert$ [b] | $a_1$ [c] | $SEE$[b] | $r^2$ |
| Engine speed | $f_n$ | Within 370 days before testing | $\leq 0.05\ \% \cdot f_{nmax}$ | 0.98-1.02 | $\leq 2\ \% \cdot f_{nmax}$ | $\geq 0.990$ |
| Engine torque | $T$ | Within 370 days before testing | $\leq 1\ \% \cdot T_{max}$ | 0.98-1.02 | $\leq 2\ \% \cdot T_{max}$ | $\geq 0.990$ |
| Electrical work | $W$ | Within 370 days before testing | $\leq 1\ \% \cdot W_{max}$ | 0.98-1.02 | $\leq 2\ \% \cdot W_{max}$ | $\geq 0.990$ |
| Fuel flow rate | $\dot{m}$ | Within 370 days before testing[d] | $\leq 1\ \% \cdot \dot{m}_{max}$ | 0.98-1.02 [e] | $\leq 2\ \% \cdot \dot{m}_{max}$ | $\geq 0.990$ |
| Intake-air flow rate | $\dot{n}$ | Within 370 days before testing [d] | $\leq 1\ \% \cdot \dot{n}_{max}$ | 0.98-1.02 [e] | $\leq 2\ \% \cdot \dot{n}_{max}$ | $\geq 0.990$ |
| Dilution air flow rate | $\dot{n}$ | Within 370 days before testing [d] | $\leq 1\ \% \cdot \dot{n}_{max}$ | 0.98-1.02 | $\leq 2\ \% \cdot \dot{n}_{max}$ | $\geq 0.990$ |
| Diluted exhaust flow rate | $\dot{n}$ | Within 370 days before testing [d] | $\leq 1\ \% \cdot \dot{n}_{min}$ | 0.98-1.02 | $\leq 2\ \% \cdot \dot{n}_{max}$ | $\geq 0.990$ |
| Raw exhaust flow rate | $\dot{n}$ | Within 185 days before testing [d] | $\leq 1\ \% \cdot \dot{n}_{max}$ | 0.98-1.02 [e] | $\leq 2\ \% \cdot \dot{n}_{max}$ | $\geq 0.990$ |
| Batch sampler flow rates | $\dot{n}$ | Within 370 days before testing [d] | $\leq 1\ \% \cdot \dot{n}_{max}$ | 0.98-1.02 | $\leq 2\ \% \cdot \dot{n}_{max}$ | $\geq 0.990$ |
| Gas dividers | $x$ | Within 370 days before testing | $\leq 0.5\ \% \cdot x_{max}$ | 0.98-1.02 | $\leq 2\ \% \cdot x_{max}$ | $\geq 0.990$ |
| All gas analyzers | $x$ | Within 35 days before testing | $\leq 0.5\ \% \cdot x_{max}$ | 0.99-1.01 | $\leq 1\ \% \cdot x_{max}$ | $\geq 0.998$ |
| PM balance | $m$ | Within 370 days before testing | $\leq 1\ \% \cdot m_{max}$ | 0.99-1.01 | $\leq 1\ \% \cdot m_{max}$ | $\geq 0.998$ |
| Stand-alone pressures | $p$ | Within 370 days before testing | $\leq 1\ \% \cdot p_{max}$ | 0.99-1.01 | $\leq 1\ \% \cdot p_{max}$ | $\geq 0.998$ |
| Stand-alone temperatures | $T$ | Within 370 days before testing | $\leq 1\ \% \cdot T_{max}$ | 0.99-1.01 | $\leq 1\ \% \cdot T_{max}$ | $\geq 0.998$ |

[a] Perform a linearity verification more frequently if the instrument manufacturer recommends it or based on good engineering judgment.

[b] "max" refers to the maximum value expected during a test—the maximum value used for the linearity verification.

[c] The specified ranges are inclusive. For example, a specified range of 0.98-1.02 for $a_1$ means $0.98 \leq a_1 \leq 1.02$.

[d] These linearity verifications are not required for systems that pass the flow-rate verification for diluted exhaust as described in §1065.341 (the propane check) or for systems that agree within ±2 % based on a chemical balance of carbon or oxygen of the intake air, fuel, and exhaust.

[e] $a_0$ and $a_1$ for these quantities are required only if the actual value of the quantity is required, as opposed to a signal that is only linearly proportional to the actual value.

**§ 1065.308 Continuous gas analyzer system-response and updating-recording verification.**

(a) *Scope and frequency.* Perform this verification after installing or replacing a gas analyzer that you use for continuous sampling. Also perform this verification if you reconfigure your system in a way that would change system response. For example, perform this verification if you add a significant volume to the transfer lines by increasing their length or adding a filter; or if you change the frequency at which you sample and record gas-analyzer concentrations.

(b) *Measurement principles.* This test verifies that the updating and recording frequencies match the overall system response to a rapid change in the value of concentrations at the sample probe. Gas analyzer systems must be optimized such that their overall response to a rapid change in concentration is updated and recorded at an appropriate frequency to prevent loss of information.

(c) *System requirements.* To demonstrate acceptable updating and recording with respect to the system's overall response, use good engineering judgment to select one of the following criteria that your system must meet:

(1) The product of the mean rise time and the frequency at which the system records an updated concentration must be at least 5, and the product of the mean fall time and the frequency at

which the system records an updated concentration must be at least 5. This criteria makes no assumption regarding the frequency content of changes in emission concentrations during emission testing; therefore, it is valid for any testing.

(2) The frequency at which the system records an updated concentration must be at least 5 Hz. This criteria assumes that the frequency content of significant changes in emission concentrations during emission testing do not exceed 1 Hz.

(3) You may use other criteria if we approve the criteria in advance.

(4) For PEMS, you do not have to meet this criteria if your PEMS meets the overall PEMS check in § 1065.920.

(d) *Procedure.* Use the following procedure to verify the response of a continuous gas analyzer system:

(1) *Instrument setup.* Follow the analyzer system manufacturer's start-up and operating instructions. Adjust the system as needed to optimize performance.

(2) *Equipment setup.* Using minimal gas transfer line lengths between all connections, connect a zero-air source to one inlet of a fast-acting 3-way valve (2 inlets, 1 outlet). Using a gas divider, equally blend an NO–CO–$CO_2$–$C_3H_8$–$CH_4$ (balance $N_2$) span gas with a span gas of $NO_2$. Connect the gas divider outlet to the other inlet of the 3-way valve. Connect the valve outlet to an overflow at the gas analyzer system's probe or to an overflow fitting between the probe and transfer line to all the analyzers being verified.

(3) *Data collection.* (i) Switch the valve to flow zero gas.

(ii) Allow for stabilization, accounting for transport delays and the slowest instrument's full response.

(iii) Start recording data at the frequency used during emission testing. Each recorded value must be a unique updated concentration measured by the analyzer; you may not use interpolation to increase the number of recorded values.

(iv) Switch the valve to flow the blended span gases.

(v) Allow for transport delays and the slowest instrument's full response.

(vi) Repeat the steps in paragraphs (d)(3)(i) through (v) of this section to record seven full cycles, ending with zero gas flowing to the analyzers.

(vii) Stop recording.

(e) *Performance evaluation.* (1) If you chose to demonstrate compliance with paragraph

(c)(1) of this section, use the data from paragraph (d)(3) of this section to calculate the mean rise time, $T_{10–90}$, and mean fall time, $T_{90–10}$, for each of the analyzers. Multiply these times (in seconds) by their respective recording frequencies in Hertz (1/second). The value for each result must be at least 5. If the value is less than 5, increase the recording frequency or adjust the flows or design of the sampling system to increase the rise time and fall time as needed. You may also configure digital filters to increase rise and fall times.

(2) If a measurement system fails the criterion in paragraph (e)(1) of this section, ensure that signals from the system are updated and recorded at a frequency of at least 5 Hz.

(3) If a measurement system fails the criteria in paragraphs (e)(1) and (2) of this section, you may use the continuous analyzer system only if the deficiency does not adversely affect your ability to show compliance with the applicable standards.

**§ 1065.309 Continuous gas analyzer uniform response verification.**

(a) *Scope and frequency.* If you use more than one continuous gas analyzer to quantify a gaseous constituent, you must perform this verification. For example, if you determine NMHC as the difference between continuous THC and $CH_4$ measurements, you must perform this verification on your NMHC measurement system. As another example if you determine $NO_X$ as the sum of separate continuous measurements of NO and $NO_2$, you must perform this verification on your $NO_X$ measurement system. Also, you must perform this verification if you use one continuous analyzer to apply an interference compensation algorithm to another continuous gas analyzer. Perform this verification after initial installation or major maintenance. Also perform this verification if you reconfigure your system in a way that would change system response. For example, perform this verification if you add a significant volume to the transfer lines by increasing their length or by adding a filter; or if you change the frequency at which you sample and record gas-analyzer concentrations.

(b) *Measurement principles.* This procedure verifies the time-alignment and uniform response of combined continuous gas measurements.

(c) *System requirements.* Demonstrate that combined continuous concentration measurements have a uniform rise and fall during a simultaneous to a step change in both concentrations. During a system response to a rapid change in multiple gas concentrations, demonstrate that the $t_{50}$ times of all combined analyzers all occur at the same recorded second of data or between the same two recorded seconds of data.

(d) *Procedure.* Use the following procedure to verify the response of a continuous gas analyzer system:

(1) *Instrument setup.* Follow the analyzer system manufacturer's start-up and operating instructions. Adjust the system as needed to optimize performance.

(2) *Equipment setup.* Using minimal gas transfer line lengths between all connections, connect a zero-air source to the inlet of a 100 °C heated line. Connect the heated line outlet to one inlet of a 100 °C heated fast-acting 3-way valve (2 inlets, 1 outlet). Using a gas divider, equally blend an NO–CO–$CO_2$–$C_3H_8$–$CH_4$ (balance $N_2$) span gas with a span gas of $NO_2$ (balance $N_2$). Connect the gas divider outlet to the inlet of a 50 °C heated line. Connect the heated line outlet to the inlet of a 50 °C gas bubbler filled with distilled water. Connect the bubbler outlet to another heated line at 100 °C. Connect the outlet of the 100 °C line to the other inlet of the 3-way valve. Connect the valve outlet to an overflow at the gas analyzer system's probe or to an overflow fitting between the probe and transfer line to all the analyzers being verified.

(3) *Data collection.* (i) Switch the valve to flow zero gas.

(ii) Allow for stabilization, accounting for transport delays and the slowest instrument's full response.

(iii) Start recording data at the frequency used during emission testing.

(iv) Switch the valve to flow span gas.

(v) Allow for transport delays and the slowest instrument's full response.

(vi) Repeat the steps in paragraphs (d)(3)(i) through (v) of this section to record seven full cycles, ending with zero gas flowing to the analyzers.

(vii) Stop recording.

(e) *Performance evaluations.* Perform the following evaluations:

(1) *Uniform response evaluation.* (i) Calculate the mean rise time, $t_{10–90}$, mean fall time, $t_{90–10}$ for each analyzer.

(ii) Determine the maximum mean rise and fall times for the slowest responding analyzer in each combination of continuous analyzer signals that you use to determine a single emission concentration.

(iii) If the maximum rise time or fall time is greater than one second, verify that all other gas analyzers combined with it have mean rise and fall times of at least 75% of that analyzer's response.

(iv) If any analyzer has shorter rise or fall times, disperse that signal so that it better matches the rise and fall times of the slowest signal with which it is combined. We recommend that you perform dispersion using SAE 2001–01–

3536 (incorporated by reference in § 1065.1010) as a guide.

(v) Repeat this verification after optimizing your systems to ensure that you dispersed signals correctly. If after repeated attempts at dispersing signals your system still fails this verification, you may use the continuous analyzer system if the deficiency does not adversely affect your ability to show compliance with the applicable standards.

(2) *Time alignment evaluation.* (i) After all signals are adjusted to meet the uniform response evaluation, determine the second at which—or the two seconds between which—each analyzer crossed the midpoint of its response, $t_{50}$.

(ii) Verify that all combined gas analyzer signals are time-aligned such that all of their $t_{50}$ times occurred at the same second or between the same two seconds in the recorded data.

(iii) If your system fails to meet this criterion, you may change the time alignment of your system and retest the system completely. If after changing the time alignment of your system, some of the $t_{50}$ times still are not aligned, take corrective action by dispersing analyzer signals that have the shortest rise and fall times.

(iv) If some $t_{50}$ times are still not aligned after repeated attempts at dispersion and time alignment, you may use the continuous analyzer system if the deficiency does not adversely affect your ability to show compliance with the applicable standards.

## Measurement of Engine Parameters and Ambient Conditions

### § 1065.310 Torque calibration.

(a) *Scope and frequency.* Calibrate all torque-measurement systems including dynamometer torque measurement transducers and systems upon initial installation and after major maintenance. Use good engineering judgment to repeat the calibration. Follow the torque transducer manufacturer's instructions for linearizing your torque sensor's output. We recommend that you calibrate the torque-measurement system with a reference force and a lever arm.

(b) *Recommended procedure.* (1) *Reference force quantification.* Use either a set of dead-weights or a reference meter such as strain gage or a proving ring to quantify the reference force, NIST-traceable within ±0.5% uncertainty.

(2) *Lever-arm length quantification.* Quantify the lever arm length, NIST-traceable within ±0.5% uncertainty. The lever arm's length must be measured from the centerline of the dynamometer to the point at which the reference force is measured. The lever arm must be perpendicular to gravity (i.e., horizontal), and it must be perpendicular to the dynamometer's rotational axis. Balance the lever arm's torque or quantify its net hanging torque, NIST-traceable within ±1% uncertainty, and account for it as part of the reference torque.

(c) *Dead-weight calibration.* This technique applies a known force by hanging known weights at a known distance along a lever arm. Make sure the weights' lever arm is perpendicular to gravity (*i.e.,* horizontal) and perpendicular to the dynamometer's rotational axis. Apply at least six calibration-weight combinations for each applicable torque-measuring range, spacing the weight quantities about equally over the range. Oscillate or rotate the dynamometer during calibration to reduce frictional static hysteresis. Determine each weight's force by multiplying its NIST-traceable mass by the local acceleration of Earth's gravity (using this equation: force = mass · acceleration). The local acceleration of gravity, $a_g$, at your latitude, longitude, and elevation may be determined by entering position and elevation data into the U.S. National Oceanographic and Atmospheric Administration's surface gravity prediction Web site at *http://www.ngs.noaa.gov/cgi-bin/grav_pdx.prl*. If this Web site is unavailable, you may use the equation in § 1065.630, which returns the local acceleration of gravity based on a given latitude. In this case, calculate the reference torque as the weights' reference force multiplied by the lever arm reference length (using this equation: torque = force · lever arm length).

(d) *Strain gage or proving ring calibration.* This technique applies force either by hanging weights on a lever arm (these weights and their lever arm length are not used) or by operating the dynamometer at different torques. Apply at least six force combinations for each applicable torque-measuring range, spacing the force quantities about equally over the range. Oscillate or rotate the dynamometer during calibration to reduce frictional static hysteresis. In this case, the reference torque is determined by multiplying the reference meter force output by its effective lever-arm length, which you measure from the point where the force measurement is made to the dynamometer's rotational axis. Make sure you measure this length perpendicular to gravity (*i.e.,* horizontal) and perpendicular to the dynamometer's rotational axis.

### § 1065.315 Pressure, temperature, and dewpoint calibration.

(a) Calibrate instruments for measuring pressure, temperature, and dewpoint upon initial installation. Follow the instrument manufacturer's instructions and use good engineering judgment to repeat the calibration, as follows:

(1) *Pressure.* We recommend temperature-compensated, digital-pneumatic, or deadweight pressure calibrators, with data-logging capabilities to minimize transcription errors. We recommend using calibration reference quantities that are NIST-traceable within 0.5% uncertainty.

(2) *Temperature.* We recommend digital dry-block or stirred-liquid temperature calibrators, with datalogging capabilities to minimize transcription errors. We recommend using calibration reference quantities that are NIST-traceable within 0.5% uncertainty.

(3) *Dewpoint.* We recommend a minimum of three different temperature-equilibrated and temperature-monitored calibration salt solutions in containers that seal completely around the dewpoint sensor. We recommend using calibration reference quantities that are NIST-traceable within 0.5% uncertainty.

(b) You may remove system components for off-site calibration. We recommend specifying calibration reference quantities that are NIST-traceable within 0.5% uncertainty.

## Flow-Related Measurements

### § 1065.320 Fuel-flow calibration.

(a) Calibrate fuel-flow meters upon initial installation. Follow the instrument manufacturer's instructions and use good engineering judgment to repeat the calibration.

(b) You may also develop a procedure based on a chemical balance of carbon or oxygen in engine exhaust.

(c) You may remove system components for off-site calibration. When installing a flow meter with an off-site calibration, we recommend that you consider the effects of the tubing configuration upstream and downstream of the flow meter. We recommend specifying calibration reference quantities that are NIST-traceable within 0.5% uncertainty.

### § 1065.325 Intake-flow calibration.

(a) Calibrate intake-air flow meters upon initial installation. Follow the instrument manufacturer's instructions and use good engineering judgment to repeat the calibration. We recommend using a calibration subsonic venturi, ultrasonic flow meter or laminar flow

element. We recommend using calibration reference quantities that are NIST-traceable within 0.5% uncertainty.

(b) You may remove system components for off-site calibration. When installing a flow meter with an off-site calibration, we recommend that you consider the effects of the tubing configuration upstream and downstream of the flow meter. We recommend specifying calibration reference quantities that are NIST-traceable within 0.5% uncertainty.

(c) If you use a subsonic venturi or ultrasonic flow meter for intake flow measurement, we recommend that you calibrate it as described in § 1065.340.

**§ 1065.330 Exhaust-flow calibration.**

(a) Calibrate exhaust-flow meters upon initial installation. Follow the instrument manufacturer's instructions and use good engineering judgment to repeat the calibration. We recommend that you use a calibration subsonic venturi or ultrasonic flow meter and simulate exhaust temperatures by incorporating a heat exchanger between the calibration meter and the exhaust-flow meter. If you can demonstrate that the flow meter to be calibrated is insensitive to exhaust temperatures, you may use other reference meters such as laminar flow elements, which are not commonly designed to withstand typical raw exhaust temperatures. We recommend using calibration reference quantities that are NIST-traceable within 0.5% uncertainty.

(b) You may remove system components for off-site calibration. When installing a flow meter with an off-site calibration, we recommend that you consider the effects of the tubing configuration upstream and downstream of the flow meter. We recommend specifying calibration reference quantities that are NIST-traceable within 0.5% uncertainty.

(c) If you use a subsonic venturi or ultrasonic flow meter for raw exhaust flow measurement, we recommend that you calibrate it as described in § 1065.340.

**§ 1065.340 Diluted exhaust flow (CVS) calibration.**

(a) *Overview*. This section describes how to calibrate flow meters for diluted exhaust constant-volume sampling (CVS) systems.

(b) *Scope and frequency*. Perform this calibration while the flow meter is installed in its permanent position. Perform this calibration after you change any part of the flow configuration upstream or downstream of the flow meter that may affect the flow-meter calibration. Perform this calibration upon initial CVS installation and whenever corrective action does not resolve a failure to meet the diluted exhaust flow verification (*i.e.*, propane check) in § 1065.341.

(c) *Reference flow meter*. Calibrate a CVS flow meter using a reference flow meter such as a subsonic venturi flow meter, a long-radius ASME/NIST flow nozzle, a smooth approach orifice, a laminar flow element, a set of critical flow venturis, or an ultrasonic flow meter. Use a reference flow meter that reports quantities that are NIST-traceable within ±1% uncertainty. Use this reference flow meter's response to flow as the reference value for CVS flow-meter calibration.

(d) *Configuration*. Do not use an upstream screen or other restriction that could affect the flow ahead of the reference flow meter, unless the flow meter has been calibrated with such a restriction.

(e) *PDP calibration*. Calibrate a positive-displacement pump (PDP) to determine a flow-versus-PDP speed equation that accounts for flow leakage across sealing surfaces in the PDP as a function of PDP inlet pressure. Determine unique equation coefficients for each speed at which you operate the PDP. Calibrate a PDP flow meter as follows:

(1) Connect the system as shown in Figure 1 of this section.

(2) Leaks between the calibration flow meter and the PDP must be less than 0.3% of the total flow at the lowest calibrated flow point; for example, at the highest restriction and lowest PDP-speed point.

(3) While the PDP operates, maintain a constant temperature at the PDP inlet within ±2% of the mean absolute inlet temperature, $\bar{T}_{in}$.

(4) Set the PDP speed to the first speed point at which you intend to calibrate.

(5) Set the variable restrictor to its wide-open position.

(6) Operate the PDP for at least 3 min to stabilize the system. Continue operating the PDP and record the mean values of at least 30 seconds of sampled data of each of the following quantities:

(i) The mean flow rate of the reference flow meter, $\bar{n}_{ref}$. This may include several measurements of different quantities, such as reference meter pressures and temperatures, for calculating $\bar{n}_{ref}$.

(ii) The mean temperature at the PDP inlet, $\bar{T}_{in}$.

(iii) The mean static absolute pressure at the PDP inlet, $\bar{P}_{in}$.

(iv) The mean static absolute pressure at the PDP outlet, $\bar{P}_{out}$.

(v) The mean PDP speed, $\bar{f}_{nPDP}$.

(7) Incrementally close the restrictor valve to decrease the absolute pressure at the inlet to the PDP, $\bar{P}_{in}$.

(8) Repeat the steps in paragraphs (e)(6) and (7) of this section to record data at a minimum of six restrictor positions reflecting the full range of possible in-use pressures at the PDP inlet.

(9) Calibrate the PDP by using the collected data and the equations in § 1065.640.

(10) Repeat the steps in paragraphs (e)(6) through (9) of this section for each speed at which you operate the PDP.

(11) Use the equations in § 1065.642 to determine the PDP flow equation for emission testing.

(12) Verify the calibration by performing a CVS verification (*i.e.*, propane check) as described in § 1065.341.

(13) Do not use the PDP below the lowest inlet pressure tested during calibration.

(f) *CFV calibration*. Calibrate a critical-flow venturi (CFV) to verify its discharge coefficient, $C_d$, at the lowest expected static differential pressure between the CFV inlet and outlet. Calibrate a CFV flow meter as follows:

(1) Connect the system as shown in Figure 1 of this section.

(2) Start the blower downstream of the CFV.

(3) While the CFV operates, maintain a constant temperature at the CFV inlet within ±2% of the mean absolute inlet temperature, $\bar{T}_{in}$.

(4) Leaks between the calibration flow meter and the CFV must be less than 0.3 % of the total flow at the highest restriction.

(5) Set the variable restrictor to its wide-open position.

(6) Operate the CFV for at least 3 min to stabilize the system. Continue operating the CFV and record the mean values of at least 30 seconds of sampled data of each of the following quantities:

(i) The mean flow rate of the reference flow meter, $\bar{n}_{ref}$. This may include several measurements of different quantities, such as reference meter pressures and temperatures, for calculating $\bar{n}_{ref}$.

(ii) Optionally, the mean dewpoint of the calibration air, $\bar{T}_{dew}$. See § 1065.640 for permissible assumptions.

(iii) The mean temperature at the venturi inlet, $\bar{T}_{in}$.

(iv) The mean static absolute pressure at the venturi inlet, $\bar{P}_{in}$.

(v) The mean static differential pressure between the CFV inlet and the CFV outlet, $\Delta\bar{P}_{CFV}$.

(7) Incrementally close the restrictor valve to decrease the absolute pressure at the inlet to the CFV, $P_{in}$.

(8) Repeat the steps in paragraphs (f)(6) and (7) of this section to record mean data at a minimum of ten restrictor positions, such that you test the fullest practical range of $\Delta\bar{P}_{CFV}$ expected during testing. We do not require that you remove calibration components or CVS components to calibrate at the lowest possible restrictions.

(9) Determine $C_d$ and the lowest allowable $\Delta\bar{P}_{CFV}$ as described in § 1065.640.

(10) Use $C_d$ to determine CFV flow during an emission test. Do not use the CFV below the lowest allowed $\Delta\bar{P}_{CFV}$, as determined in § 1065.640.

(11) Verify the calibration by performing a CVS verification (*i.e.*, propane check) as described in § 1065.341.

(12) If your CVS is configured to operate more than one CFV at a time in parallel, calibrate your CVS by one of the following:

(i) Calibrate every combination of CFVs according to this section and § 1065.640. Refer to § 1065.642 for instructions on calculating flow rates for this option.

(ii) Calibrate each CFV according to this section and § 1065.640. Refer to § 1065.642 for instructions on calculating flow rates for this option.

(g) *SSV calibration.* Calibrate a subsonic venturi (SSV) to determine its calibration coefficient, $C_d$ , for the expected range of inlet pressures. Calibrate an SSV flow meter as follows:

(1) Connect the system as shown in Figure 1 of this section.

(2) Start the blower downstream of the SSV.

(3) Leaks between the calibration flow meter and the SSV must be less than 0.3 % of the total flow at the highest restriction.

(4) While the SSV operates, maintain a constant temperature at the SSV inlet within ±2 % of the mean absolute inlet temperature.

(5) Set the variable restrictor or variable-speed blower to a flow rate greater than the greatest flow rate expected during testing. You may not extrapolate flow rates beyond calibrated values, so we recommend that you make sure the Reynolds number, Re#, at the SSV throat at the greatest calibrated flow rate is greater than the maximum Re# expected during testing.

(6) Operate the SSV for at least 3 min to stabilize the system. Continue operating the SSV and record the mean of at least 30 seconds of sampled data of each of the following quantities:

(i) The mean flow rate of the reference flow meter, $\bar{n}_{ref}$. This may include several measurements of different quantities, such as reference meter pressures and temperatures, for caculating $\bar{n}_{ref}$.

(ii) Optionally, the mean dewpoint of the calibration air, $\bar{T}_{dew}$. See § 1065.640 for permissible assumptions.

(iii) The mean temperature at the venturi inlet, $\bar{T}_{in}$ .

(iv) The mean static absolute pressure at the venturi inlet, $\bar{P}_{in}$.

(v) Static differential pressure between the static pressure at the venturi inlet and the static pressure at the venturi throat, $\Delta\bar{P}_{SSV}$.

(7) Incrementally close the restrictor valve or decrease the blower speed to decrease the flow rate.

(8) Repeat the steps in paragraphs (g)(6) and (7) of this section to record data at a minimum of ten flow rates.

(9) Determine a functional form of $C_d$ versus Re# by using the collected data and the equations in § 1065.640.

(10) Verify the calibration by performing a CVS verification (*i.e.*, propane check) as described in § 1065.341 using the new $C_d$ versus $Re^{\#}$ equation.

(11) Use the SSV only between the minimum and maximum calibrated flow rates.

(12) Use the equations in § 1065.642 to determine SSV flow during a test.

(h) *Ultrasonic flow meter calibration.* [Reserved]

BILLING CODE 6560–50–P

Figure 1 of §1065.340—Schematic diagrams for diluted exhaust flow (CVS) calibration.

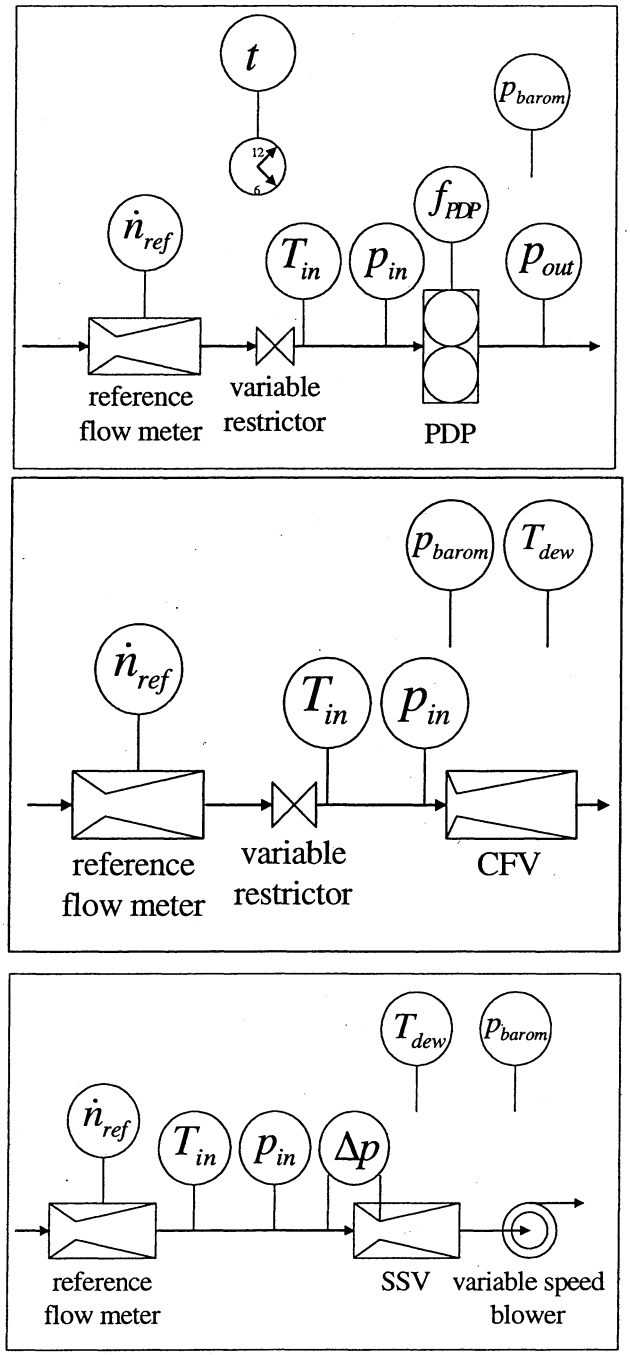


BILLING CODE 6560–50–C

**§ 1065.341 CVS and batch sampler verification (propane check).**

(a) A propane check serves as a CVS verification to determine if there is a discrepancy in measured values of diluted exhaust flow. A propane check also serves as a batch-sampler verification to determine if there is a discrepancy in a batch sampling system that extracts a sample from a CVS, as described in paragraph (g) of this section. Using good engineering judgment and safe practices, this check may be performed using a gas other than propane, such as $CO_2$ or CO. A failed propane check might indicate one or more problems that may require corrective action, as follows:

(1) *Incorrect analyzer calibration.* Re-calibrate, repair, or replace the FID analyzer.

(2) *Leaks.* Inspect CVS tunnel, connections, fasteners, and HC sampling system, and repair or replace components.

(3) *Poor mixing.* Perform the verification as described in this section while traversing a sampling probe across the tunnel's diameter, vertically and horizontally. If the analyzer response indicates any deviation exceeding ±2% of the mean measured concentration, consider operating the CVS at a higher flow rate or installing a mixing plate or orifice to improve mixing.

(4) *Hydrocarbon contamination in the sample system.* Perform the hydrocarbon-contamination verification as described in § 1065.520.

(5) *Change in CVS calibration.* Perform an in-situ calibration of the CVS flow meter as described in § 1065.340.

(6) *Other problems with the CVS or sampling verification hardware or software.*

Inspect the CVS system, CVS verification hardware, and software for discrepancies. (b) A propane check uses either a reference mass or a reference flow rate of $C_3H_8$ as a tracer gas in a CVS. Note that if you use a reference flow rate, account for any non-ideal gas behavior of $C_3H_8$ in the reference flow meter. Refer to § 1065.640 and § 1065.642, which describe how to calibrate and use certain flow meters. Do not use any ideal gas assumptions in § 1065.640 and § 1065.642. The propane check compares the calculated mass of injected $C_3H_8$ using HC measurements and CVS flow rate measurements with the reference value.

(c) Prepare for the propane check as follows:

(1) If you use a reference mass of$C_3H_8$ instead of a reference flow rate, obtain a cylinder charged with $C_3H_8$. Determine the reference cylinder's mass of $C_3H_8$ within ±0.5% of the amount of $C_3H_8$ that you expect to use.

(2) Select appropriate flow rates for the CVS and$C_3H_8$.

(3) Select a$C_3H_8$ injection port in the CVS. Select the port location to be as close as practical to the location where you introduce engine exhaust into the CVS. Connect the $C_3H_8$ cylinder to the injection system.

(4) Operate and stabilize the CVS.

(5) Preheat or precool any heat exchangers in the sampling system.

(6) Allow heated and cooled components such as sample lines, filters, chillers, and pumps to stabilize at operating temperature.

(7) You may purge the HC sampling system during stabilization.

(8) If applicable, perform a vacuum side leak verification of the HC sampling system as described in § 1065.345.

(9) You may also conduct any other calibrations or verifications on equipment or analyzers.

(d) Zero, span, and verify contamination of the HC sampling system, as follows:

(1) Select the lowest HC analyzer range that can measure the $C_3H_8$ concentration expected for the CVS and $C_3H_8$ flow rates.

(2) Zero the HC analyzer using zero air introduced at the analyzer port.

(3) Span the HC analyzer using $C_3H_8$ span gas introduced at the analyzer port.

(4) Overflow zero air at the HC probe or into a fitting between the HC probe and the transfer line.

(5) Measure the stable HC concentration of the HC sampling system as overflow zero air flows. For batch HC measurement, fill the batch container (such as a bag) and measure the HC overflow concentration.

(6) If the overflow HC concentration exceeds 2 μmol/mol, do not proceed until contamination is eliminated. Determine the source of the contamination and take corrective action, such as cleaning the system or replacing contaminated portions.

(7) When the overflow HC concentration does not exceed 2 μmol/mol, record this value as $x_{HCpre}$ and use it to correct for HC contamination as described in § 1065.660.

(e) Perform the propane check as follows:

(1) For batch HC sampling, connect clean storage media, such as evacuated bags.

(2) Operate HC measurement instruments according to the instrument manufacturer's instructions.

(3) If you will correct for dilution air background concentrations of HC, measure and record background HC in the dilution air.

(4) Zero any integrating devices.

(5) Begin sampling, and start any flow integrators.

(6) Release the contents of the $C_3H_8$ reference cylinder at the rate you selected. If you use a reference flow rate of $C_3H_8$, start integrating this flow rate.

(7) Continue to release the cylinder's contents until at least enough $C_3H_8$ has been released to ensure accurate quantification of the reference $C_3H_8$ and the measured $C_3H_8$.

(8) Shut off the $C_3H_8$ reference cylinder and continue sampling until you have accounted for time delays due to sample transport and analyzer response.

(9) Stop sampling and stop any integrators.

(f) Perform post-test procedure as follows:

(1) If you used batch sampling, analyze batch samples as soon as practical.

(2) After analyzing HC, correct for contamination and background.

(3) Calculate total $C_3H_8$ mass based on your CVS and HC data as described in § 1065.650 and § 1065.660, using the molar mass of $C_3H_8$, $M_{C3H8}$, instead the effective molar mass of HC, $M_{HC}$.

(4) If you use a reference mass, determine the cylinder's propane mass within ±0.5% and determine the $C_3H_8$ reference mass by subtracting the empty cylinder propane mass from the full cylinder propane mass.

(5) Subtract the reference $C_3H_8$ mass from the calculated mass. If this difference is within ±2.0 % of the reference mass, the CVS passes this verification. If not, take corrective action as described in paragraph (a) of this section.

(g) *Batch sampler verification.* You may repeat the propane check to verify a batch sampler, such as a PM secondary dilution system.

(1) Configure the HC sampling system to extract a sample near the location of the batch sampler's storage media (such as a PM filter). If the absolute pressure at this location is too low to extract an HC sample, you may sample HC from the batch sampler pump's exhaust. Use caution when sampling from pump exhaust because an otherwise acceptable pump leak downstream of a batch sampler flow meter will cause a false failure of the propane check.

(2) Repeat the propane check described in this section, but sample HC from the batch sampler.

(3) Calculate $C_3H_8$ mass, taking into account any secondary dilution from the batch sampler.

(4) Subtract the reference $C_3H_8$ mass from the calculated mass. If this difference is within ±5% of the reference mass, the batch sampler passes this verification. If not, take corrective action as described in paragraph (a) of this section.

**§ 1065.345 Vacuum-side leak verification.**

(a) *Scope and frequency.* Upon initial sampling system installation, after major maintenance, and before each test according to subpart F of this part for laboratory tests and according to subpart J of this part for field tests, verify that there are no significant vacuum-side leaks using one of the leak tests described in this section.

(b) *Measurement principles.* A leak may be detected either by measuring a small amount of flow when there should be zero flow, or by detecting the dilution of a known concentration of span gas when it flows through the vacuum side of a sampling system.

(c) *Low-flow leak test.* Test a sampling system for low-flow leaks as follows:

(1) Seal the probe end of the system by taking one of the following steps:

(i) Cap or plug the end of the sample probe.

(ii) Disconnect the transfer line at the probe and cap or plug the transfer line.

(iii) Close a leak-tight valve in-line between a probe and transfer line.

(2) Operate all vacuum pumps. After stabilizing, verify that the flow through

the vacuum-side of the sampling system is less than 0.5 % of the system's normal in-use flow rate. You may estimate typical analyzer and bypass flows as an approximation of the system's normal in-use flow rate.

(d) *Dilution-of-span-gas leak test.* Test any analyzer, other than a FID, for dilution of span gas as follows, noting that this configuration requires an overflow span gas system:

(1) Prepare a gas analyzer as you would for emission testing.

(2) Supply span gas to the analyzer port and verify that it measures the span gas concentration within its expected measurement accuracy and repeatability.

(3) Route overflow span gas to one of the following locations in the sampling system:

(i) The end of the sample probe.

(ii) Disconnect the transfer line at the probe connection, and overflow the span gas at the open end of the transfer line.

(iii) A three-way valve installed in-line between a probe and its transfer line, such as a system overflow zero and span port.

(4) Verify that the measured overflow span gas concentration is within the measurement accuracy and repeatability of the analyzer. A measured value lower than expected indicates a leak, but a value higher than expected may indicate a problem with the span gas or the analyzer itself. A measured value higher than expected does not indicate a leak.

## CO and $CO_2$ Measurements

### § 1065.350 $H_2O$ interference verification for $CO_2$ NDIR analyzers.

(a) *Scope and frequency.* If you measure $CO_2$ using an NDIR analyzer, verify the amount of $H_2O$ interference after initial analyzer installation and after major maintenance.

(b) *Measurement principles.* $H_2O$ can interfere with an NDIR analyzer's response to $CO_2$.

If the NDIR analyzer uses compensation algorithms that utilize measurements of other gases to meet this interference verification, simultaneously conduct these other measurements to test the compensation algorithms during the analyzer interference verification.

(c) *System requirements.* A $CO_2$ NDIR analyzer must have an $H_2O$ interference that is within ±2% of the flow-weighted mean $CO_2$ concentration expected at the standard, though we strongly recommend a lower interference that is within ±1%.

(d) *Procedure.* Perform the interference verification as follows:

(1) Start, operate, zero, and span the $CO_2$ NDIR analyzer as you would before an emission test.

(2) Create a water-saturated test gas by bubbling zero air that meets the specifications in § 1065.750 through distilled water in a sealed vessel at (25 ± 10) °C.

(3) Introduce the water-saturated test gas upstream of any sample dryer, if one is used during testing.

(4) Allow time for the analyzer response to stabilize. Stabilization time may include time to purge the transfer line and to account for analyzer response.

(5) While the analyzer measures the sample's concentration, record 30 seconds of sampled data. Calculate the arithmetic mean of this data. The analyzer meets the interference verification if this value is within ±2% of the flow-weighted mean concentration of $CO_2$ expected at the standard.

(e) *Exceptions.* The following exceptions apply:

(1) You may omit this verification if you can show by engineering analysis that for your $CO_2$ sampling system and your emission-calculation procedures, the $H_2O$ interference for your $CO_2$ NDIR analyzer always affects your brake-specific emission results within ±0.5% of each of the applicable standards.

(2) You may use a $CO_2$ NDIR analyzer that you determine does not meet this verification, as long as you try to correct the problem and the measurement deficiency does not adversely affect your ability to show that engines comply with all applicable emission standards.

### § 1065.355 $H_2O$ and $CO_2$ interference verification for CO NDIR analyzers.

(a) *Scope and frequency.* If you measure CO using an NDIR analyzer, verify the amount of $H_2O$ and $CO_2$ interference after initial analyzer installation and after major maintenance.

(b) *Measurement principles.* $H_2O$ and $CO_2$ can positively interfere with an NDIR analyzer by causing a response similar to CO. If the NDIR analyzer uses compensation algorithms that utilize measurements of other gases to meet this interference verification, simultaneously conduct these other measurements to test the compensation algorithms during the analyzer interference verification.

(c) *System requirements.* A CO NDIR analyzer must have combined $H_2O$ and $CO_2$ interference that is within ±2 % of the flow-weighted mean concentration of CO expected at the standard, though we strongly recommend a lower interference that is within ±1%.

(d) *Procedure.* Perform the interference verification as follows:

(1) Start, operate, zero, and span the CO NDIR analyzer as you would before an emission test.

(2) Create a water-saturated $CO_2$ test gas by bubbling a $CO_2$ span gas through distilled water in a sealed vessel at (25 ±10) °C.

(3) Introduce the water-saturated $CO_2$ test gas upstream of any sample dryer, if one is used during testing.

(4) Allow time for the analyzer response to stabilize. Stabilization time may include time to purge the transfer line and to account for analyzer response.

(5) While the analyzer measures the sample's concentration, record its output for 30 seconds. Calculate the arithmetic mean of this data.

(6) Multiply this mean value by the ratio of expected $CO_2$ to span gas $CO_2$ concentration. In other words, estimate the flow-weighted mean dry concentration of $CO_2$ expected during testing, and then divide this value by the concentration of $CO_2$ in the span gas used for this verification. Then multiply this ratio by the mean value recorded during this verification.

(7) The analyzer meets the interference verification if the result of paragraph (d)(6) of this section is within ±2 % of the flow-weighted mean concentration of CO expected at the standard.

(e) *Exceptions.* The following exceptions apply:

(1) You may omit this verification if you can show by engineering analysis that for your CO sampling system and your emission calculations procedures, the combined $CO_2$ and $H_2O$ interference for your CO NDIR analyzer always affects your brake-specific CO emission results within ±0.5 % of the applicable CO standard.(2) You may use a CO NDIR analyzer that you determine does not meet this verification, as long as you try to correct the problem and the measurement deficiency does not adversely affect your ability to show that engines comply with all applicable emission standards.

## Hydrocarbon Measurements

### § 1065.360 FID optimization and verification.

(a) *Scope and frequency.* For all FID analyzers perform the following steps:

(1) Calibrate a FID upon initial installation. Repeat the calibration as needed using good engineering judgment.

(2) Optimize a FID's response to various hydrocarbons after initial

analyzer installation and after major maintenance.

(3) Determine a FID's methane ($CH_4$) response factor after initial analyzer installation and after major maintenance.

(4) Verify methane ($CH_4$) response within 185 days before testing.

(b) *Calibration*. Use good engineering judgment to develop a calibration procedure, such as one based on the FID-analyzer manufacturer's instructions and recommended frequency for calibrating the FID. Alternately, you may remove system components for off-site calibration. Calibrate using $C_3H_8$ calibration gases that meet the specifications of § 1065.750. We recommend FID analyzer zero and span gases that contain approximately the flow-weighted mean concentration of $O_2$ expected during testing. If you use a FID to measure methane ($CH_4$) downstream of a nonmethane cutter, you may calibrate that FID using $CH_4$ calibration gases with the cutter. Regardless of the calibration gas composition, calibrate on a carbon number basis of one ($C_1$). For example, if you use a $C_3H_8$ span gas of concentration 200 μmol/mol, span the FID to respond with a value of 600 μmol/mol.

(c) *FID response optimization*. Use good engineering judgment for initial instrument start-up and basic operating adjustment using FID fuel and zero air. Heated FIDs must be within their required operating temperature ranges. Optimize FID response at the most common analyzer range expected during emission testing. Optimization involves adjusting flows and pressures of FID fuel, burner air, and sample to minimize response variations to various hydrocarbon species in the exhaust. Use good engineering judgment to trade off peak FID response to propane calibration gases to achieve minimal response variations to different hydrocarbon species. For an example of trading off response to propane for relative responses to other hydrocarbon species, see SAE 770141 (incorporated by reference in § 1065.1010). Determine the optimum flow rates for FID fuel, burner air, and sample and record them for future reference.

(d) *$CH_4$ response factor determination*. Since FID analyzers generally have a different response to $CH_4$ versus C3H8, determine each FID analyzer's $CH_4$ response factor, $RF_{CH4}$, after FID optimization. Use the most recent $RF_{CH4}$ measured according to this section in the calculations for HC determination described in § 1065.660 to compensate for $CH_4$ response. Determine $RF_{CH4}$ as follows, noting that you do not determine $RF_{CH4}$ for FIDs that are calibrated and spanned using $CH_4$ with a nonmethane cutter:

(1) Select a $C_3H_8$ span gas that meets the specifications of § 1065.750. Record the $C_3H_8$ concentration of the gas.

(2) Select a $CH_4$ span gas that meets the specifications of § 1065.750. Record the $CH_4$ concentration of the gas.

(3) Start and operate the FID analyzer according to the manufacturer's instructions.

(4) Confirm that the FID analyzer has been calibrated using $C_3H_8$. Calibrate on a carbon number basis of one ($C_1$). For example, if you use a $C_3H_8$ span gas of concentration 200 μmol/mol, span the FID to respond with a value of 600 μmol/mol.

(5) Zero the FID with a zero gas that you use for emission testing.

(6) Span the FID with the $C_3H_8$ span gas that you selected under paragraph (d)(1) of this section.

(7) Introduce at the sample port of the FID analyzer, the $CH_4$ span gas that you selected under paragraph (d)(2) of this section.

(8) Allow time for the analyzer response to stabilize. Stabilization time may include time to purge the analyzer and to account for its response.

(9) While the analyzer measures the $CH_4$ concentration, record 30 seconds of sampled data. Calculate the arithmetic mean of these values.

(10) Divide the mean measured concentration by the recorded span concentration of the $CH_4$ calibration gas. The result is the FID analyzer's response factor for $CH_4$, $RF_{CH4}$.

(e) *FID methane ($CH_4$) response verification*. If the value of $RF_{CH4}$ from paragraph (d) of this section is within ±5.0% of its most recent previously determined value, the FID passes the methane response verification. For example, if the most recent previous value for $RF_{CH4}$ was 1.05 and it changed by +0.05 to become 1.10 or it changed by −0.05 to become 1.00, either case would be acceptable because +4.8% is less than +5.0%.

(1) Verify that the pressures and flow rates of FID fuel, burner air, and sample are each within ±0.5% of their most recent previously recorded values, as described in paragraph (c) of this section. You may adjust these flow rates as necessary. Determine a new $RF_{CH4}$ as described in paragraph (d) of this section.

(2) If $RF_{CH4}$ is still not within ±5.0% of its most recently determined value after adjusting flow rates, re-optimize the FID response as described in paragraph (c) of this section.

(3) Determine a new $RF_{CH4}$ as described in paragraph (d) of this section. Use this new value of $RF_{CH4}$ in the calculations for HC determination, as described in § 1065.660.

**§ 1065.362 Non-stoichiometric raw exhaust FID $O_2$ interference verification.**

(a) *Scope and frequency*. If you use FID analyzers for raw exhaust measurements from engines that operate in a non-stoichiometric mode of combustion (e.g., compression-ignition, lean-burn), verify the amount of FID $O_2$ interference upon initial installation and after major maintenance.

(b) *Measurement principles*. Changes in $O_2$ concentration in raw exhaust can affect FID response by changing FID flame temperature. Optimize FID fuel, burner air, and sample flow to meet this verification. Verify FID performance with the compensation algorithms for FID $O_2$ interference that you have active during an emission test.

(c) *System requirements*. Any FID analyzer used during testing must meet the FID $O_2$ interference verification according to the procedure in this section.

(d) *Procedure*. Determine FID $O_2$ interference as follows:

(1) Select two span reference gases that meet the specifications in § 1065.750 and contain $C_3H_8$ near 100% of span for HC. You may use $CH_4$ span reference gases for FIDs calibrated on $CH_4$ with a nonmethane cutter. Select the two balance gas concentrations such that the concentrations of $O_2$ and $N_2$ represent the minimum and maximum $O_2$ concentrations expected during testing.

(2) Confirm that the FID analyzer meets all the specifications of § 1065.360.

(3) Start and operate the FID analyzer as you would before an emission test. Regardless of the FID burner's air source during testing, use zero air as the FID burner's air source for this verification.

(4) Zero the FID analyzer using the zero gas used during emission testing.

(5) Span the FID analyzer using the span gas used during emission testing.

(6) Check the zero response of the FID analyzer using the zero gas used during emission testing. If the mean zero response of 30 seconds of sampled data is within ±0.5% of the span reference value used in paragraph (d)(5) of this section, then proceed to the next step; otherwise restart the procedure at paragraph (d)(4) of this section.

(7) Check the analyzer response using the span gas that has the minimum concentration of $O_2$ expected during testing. Record the mean response of 30 seconds of stabilized sample data as $x_{O2minHC}$.

(8) Check the zero response of the FID analyzer using the zero gas used during

emission testing. If the mean zero response of 30 seconds of stabilized sample data is within ±0.5% of the span reference value used in paragraph (d)(5) of this section, then proceed to the next step; otherwise restart the procedure at paragraph (d)(4) of this section.

(9) Check the analyzer response using the span gas that has the maximum concentration of $O_2$ expected during testing. Record the mean response of 30 seconds of stabilized sample data as $x_{O2maxHC}$.

(10) Check the zero response of the FID analyzer using the zero gas used during emission testing. If the mean zero response of 30 seconds of stabilized sample data is within ±0.5% of the span reference value used in paragraph (d)(5) of this section, then proceed to the next step; otherwise restart the procedure at paragraph (d)(4) of this section.

(11) Calculate the percent difference between $x_{O2maxHC}$ and its reference gas concentration. Calculate the percent difference between $x_{O2minHC}$ and its reference gas concentration. Determine the maximum percent difference of the two. This is the $O_2$ interference.

(12) If the $O_2$ interference is within ±1.5%, then the FID passes the $O_2$ interference check; otherwise perform one or more of the following to address the deficiency:

(i) Select zero and span gases for emission testing that contain higher or lower $O_2$ concentrations.

(ii) Adjust FID burner air, fuel, and sample flow rates. Note that if you adjust these flow rates to meet the $O_2$ interference verification, you must re-verify with the adjusted flow rates that the FID meets the $CH_4$ response factor verification according to § 1065.360.

(iii) Repair or replace the FID.

(iv) Demonstrate that the deficiency does not adversely affect your ability to demonstrate compliance with the applicable emission standards.

**§ 1065.365 Nonmethane cutter penetration fractions.**

(a) *Scope and frequency.* If you use a FID analyzer and a nonmethane cutter (NMC) to measure methane ($CH_4$), determine the nonmethane cutter's penetration fractions of methane, $PF_{CH4}$, and ethane, $PF_{C2H6}$. Perform this verification after installing the nonmethane cutter. Repeat this verification within 185 days of testing to verify that the catalytic activity of the cutter has not deteriorated. Note that because nonmethane cutters can deteriorate rapidly and without warning if they are operated outside of certain ranges of gas concentrations and outside of certain temperature ranges, good engineering judgment may dictate that you determine a nonmethane cutter's penetration fractions more frequently.

(b) *Measurement principles.* A nonmethane cutter is a heated catalyst that removes nonmethane hydrocarbons from the exhaust stream before the FID analyzer measures the remaining hydrocarbon concentration. An ideal nonmethane cutter would have $PF_{CH4}$ of 1.000, and the penetration fraction for all other hydrocarbons would be 0.000, as represented by $PF_{C2H6}$. The emission calculations in § 1065.660 use this section's measured values of $PF_{CH4}$ and $PF_{C2H6}$ to account for less than ideal NMC performance.

(c) *System requirements.* We do not limit NMC penetration fractions to a certain range. However, we recommend that you optimize a nonmethane cutter by adjusting its temperature to achieve $PF_{CH4} > 0.95$ and $PF_{C2H6} < 0.02$ as determined by paragraphs (d) and (e) of this section, as applicable. If we use a nonmethane cutter for testing, it will meet this recommendation. If adjusting NMC temperature does not result in achieving both of these specifications simultaneously, we recommend that you replace the catalyst material.

Use the most recently determined penetration values from this section to calculate HC emissions according to § 1065.660 and § 1065.665 as applicable.

(d) *Procedure for a FID calibrated with the NMC.* If your FID arrangement is such that a FID is always calibrated to measure $CH_4$ with the NMC, then span that FID with the NMC cutter using a $CH_4$ span gas, set that FID's $CH_4$ penetration fraction, $PF_{CH4}$, equal to 1.0 for all emission calculations, and determine its ethane ($C_2H_6$) penetration fraction, $PF_{C2H6}$. as follows:

(1) Select a $CH_4$ gas mixture and a $C_2H_6$ analytical gas mixture and ensure that both mixtures meet the specifications of § 1065.750. Select a $CH_4$ concentration that you would use for spanning the FID during emission testing and select a $C_2H_6$ concentration that is typical of the peak NMHC concentration expected at the hydrocarbon standard or equal to THC analyzer's span value.

(2) Start, operate, and optimize the nonmethane cutter according to the manufacturer's instructions, including any temperature optimization.

(3) Confirm that the FID analyzer meets all the specifications of § 1065.360.

(4) Start and operate the FID analyzer according to the manufacturer's instructions.

(5) Zero and span the FID with the cutter and use $CH_4$ span gas to span the FID with the cutter. Note that you must span the FID on a $C_1$ basis. For example, if your span gas has a $CH_4$ reference value of 100 μ/mol, the correct FID response to that span gas is 100 μ/mol because there is one carbon atom per $CH_4$ molecule.

(6) Introduce the $C_2H_6$ analytical gas mixture upstream of the nonmethane cutter.

(7) Allow time for the analyzer response to stabilize. Stabilization time may include time to purge the nonmethane cutter and to account for the analyzer's response.

(8) While the analyzer measures a stable concentration, record 30 seconds of sampled data. Calculate the arithmetic mean of these data points.

(9) Divide the mean by the reference value of $C_2H_6$, converted to a $C_1$ basis. The result is the $C_2H_6$ penetration fraction, $PF_{C2H6}$. Use this penetration fraction and the $CH_4$ penetration fraction, which is set equal to 1.0, in emission calculations according to § 1065.660 or § 1065.665, as applicable.

(e) *Procedure for a FID calibrated by bypassing the NMC.* If you use a FID with an NMC that is calibrated by bypassing the NMC, determine penetration fractions as follows:

(1) Select $CH_4$ and $C_2H_6$ analytical gas mixtures that meet the specifications of § 1065.750 with the $CH_4$ concentration typical of its peak concentration expected at the hydrocarbon standard and the $C_2H_6$ concentration typical of the peak total hydrocarbon (THC) concentration expected at the hydrocarbon standard or the THC analyzer span value.

(2) Start and operate the nonmethane cutter according to the manufacturer's instructions, including any temperature optimization.

(3) Confirm that the FID analyzer meets all the specifications of § 1065.360.

(4) Start and operate the FID analyzer according to the manufacturer's instructions.

(5) Zero and span the FID as you would during emission testing. Span the FID by bypassing the cutter and by using $C_3H_8$ span gas to span the FID. Note that you must span the FID on a $C_1$ basis. For example, if your span gas has a propane reference value of 100 μ/mol, the correct FID response to that span gas is 300 μ/mol because there are three carbon atoms per $C_3H_8$ molecule.

(6) Introduce the $C_2H_6$ analytical gas mixture upstream of the nonmethane cutter.

(7) Allow time for the analyzer response to stabilize. Stabilization time may include time to purge the nonmethane cutter and to account for the analyzer's response.

(8) While the analyzer measures a stable concentration, record 30 seconds of sampled data. Calculate the arithmetic mean of these data points.

(9) Reroute the flow path to bypass the nonmethane cutter, introduce the $C_2H_6$ analytical gas mixture to the bypass, and repeat the steps in paragraphs (e)(7) through (8) of this section.

(10) Divide the mean $C_2H_6$ concentration measured through the nonmethane cutter by the mean concentration measured after bypassing the nonmethane cutter. The result is the $C_2H_6$ penetration fraction, $PF_{C2H6}$. Use this penetration fraction according to § 1065.660 or § 1065.665, as applicable.

(11) Repeat the steps in paragraphs (e)(6) through (10) of this section, but with the $CH_4$ analytical gas mixture instead of $C_2H_6$. The result will be the $CH_4$ penetration fraction, $PF_{CH4}$. Use this penetration fraction according to § 1065.660 or § 1065.665, as applicable.

**No$_X$ Measurements**

**§ 1065.370 CLD $CO_2$ and $H_2O$ quench verification.**

(a) *Scope and frequency.* If you use a CLD analyzer to measure $NO_X$, verify the amount of $H_2O$ and $CO_2$ quench after installing the CLD analyzer and after major maintenance.

(b) *Measurement principles.* $H_2O$ and $CO_2$ can negatively interfere with a CLD's $NO_X$ response by collisional quenching, which inhibits the chemiluminescent reaction that a CLD utilizes to detect $NO_X$. The calculations in § 1065.672 for $H_2O$ quench account for the water vapor in humidified NO span gas. The procedure and the calculations scale the quench results to the water vapor and $CO_2$ concentrations expected during testing. If the CLD analyzer uses quench compensation algorithms that utilize $H_2O$ and/or $CO_2$ measurement instruments, use these instruments to measure $H_2O$ and/or $CO_2$ and evaluate quench with the compensation algorithms applied.

(c) *System requirements.* A CLD analyzer must have a combined $H_2O$ and $CO_2$ quench of ±2% or less, though we strongly recommend a quench of ±1% or less. Combined quench is the sum of the $CO_2$ quench determined as described in paragraph (d) of this section, plus the $H_2O$ quench determined in paragraph (e) of this section.

(d) *$CO_2$ quench verification procedure.* Use the following method to determine $CO_2$ quench, or use good engineering judgment to develop a different protocol:

(1) Use PTFE tubing to make necessary connections.

(2) Connect a pressure-regulated $CO_2$ span gas to one of the inlets of a three-way valve made of 300 series stainless steel. Use a $CO_2$ span gas that meets the specifications of § 1065.750 and attempt to use a concentration that is approximately twice the maximum $CO_2$ concentration expected to enter the CLD sample port during testing, if available.

(3) Connect a pressure-regulated purified $N_2$ gas to the valve's other inlet. Use a purified $N_2$ gas that meets the specifications of § 1065.750.

(4) Connect the valve's single outlet to the balance-gas port of a gas divider that meets the specifications in § 1065.248.

(5) Connect a pressure-regulated NO span gas to the span-port of the gas divider. Use an NO span gas that meets the specifications of § 1065.750. Attempt to use an NO concentration that is approximately twice the maximum NO concentration expected during testing, if available.

(6) Configure the gas divider such that nearly equal amounts of the span gas and balance gas are blended with each other. Apply viscosity corrections as necessary to appropriately ensure correct gas division.

(7) While flowing balance and span gases through the gas divider, stabilize the $CO_2$ concentration downstream of the gas divider and measure the $CO_2$ concentration with an NDIR analyzer that has been prepared for emission testing. Record this concentration, $X_{CO2meas}$, and use it in the quench verification calculations in § 1065.675.

(8) Measure the NO concentration downstream of the gas divider. If the CLD has an operating mode in which it detects NO-only, as opposed to total $NO_X$, operate the CLD in the NO-only operating mode. Record this concentration, $X_{NO,CO2}$, and use it in the quench verification calculations in § 1065.675.

(9) Switch the three-way valve so 100% purified $N_2$ flows to the gas divider's balance-port inlet. Monitor the $CO_2$ at the gas divider's outlet until its concentration stabilizes at zero.

(10) Measure NO concentration at the gas divider's outlet. Record this value, $X_{NO,N2}$ , and use it in the quench verification calculations in § 1065.675.

(11) Use the values recorded according to this paragraph (d) of this section and paragraph (e) of this section to calculate quench as described in § 1065.675.

(e) *$H_2O$ quench verification procedure.* Use the following method to determine $H_2O$ quench, or use good engineering judgment to develop a different protocol:

(1) Use PTFE tubing to make necessary connections.

(2) If the CLD has an operating mode in which it detects NO-only, as opposed to total $NO_X$, operate the CLD in the NO-only operating mode.

(3) Measure an NO calibration span gas that meets the specifications of § 1065.750 and is near the maximum concentration expected during testing. Record this concentration, $X_{NOdry}$.

(4) Humidify the gas by bubbling it through distilled water in a sealed vessel. We recommend that you humidify the gas to the highest sample dewpoint that you estimate during emission sampling. Regardless of the humidity during this test, the quench verification calculations in § 1065.675 scale the recorded quench to the highest dewpoint that you expect entering the CLD sample port during emission sampling.

(5) If you do not use any sample dryer for $NO_X$ during emissions testing, record the vessel water temperature as $T_{dew}$, and its pressure as $p_{total}$ and use these values according to § 1065.645 to calculate the amount of water entering the CLD sample port, $X_{H2Omeas}$. If you do use a sample dryer for $NO_X$ during emissions testing, measure the humidity of the sample just upstream of the CLD sample port and use the measured humidity according to § 1065.645 to calculate the amount of water entering the CLD sample port, $X_{H2Omeas}$.

(6) To prevent subsequent condensation, make sure that any humidified sample will not be exposed to temperatures lower than $T_{dew}$ during transport from the sealed vessel's outlet to the CLD. We recommend using heated transfer lines.

(7) Introduce the humidified sample upstream of any sample dryer, if one is used.

(8) Use the CLD to measure the NO concentration of the humidified span gas and record this value, $X_{NOwet}$.

(9) Use the recorded values from this paragraph (e) to calculate the quench as described in § 1065.675.

(10) Use the values recorded according to this paragraph (e) of this section and paragraph (d) of this section to calculate quench as described in § 1065.675.

(f) *Corrective action.* If the sum of the $H_2O$ quench plus the $CO_2$ quench is not within ±2%, take corrective action by repairing or replacing the analyzer. Before using a CLD for emission testing, demonstrate that the corrective action resulted in a value within ±2% combined quench.

(g) *Exceptions.* The following exceptions apply:

(1) You may omit this verification if you can show by engineering analysis that for your $NO_X$ sampling system and

your emission calculations procedures, the the combined $CO_2$ and $H_2O$ interference for your $NO_X$ CLD analyzer always affects your brake-specific $NO_X$ emission results within no more than ±1.0% of the applicable $NO_X$ standard.

(2) You may use a $NO_X$ CLD analyzer that you determine does not meet this verification, as long as you try to correct the problem and the measurement deficiency does not adversely affect your ability to show that engines comply with all applicable emission standards.

**§ 1065.372 NDUV analyzer HC and $H_2O$ interference verification.**

(a) *Scope and frequency.* If you measure $NO_X$ using an NDUV analyzer, verify the amount of $H_2O$ and hydrocarbon interference after initial analyzer installation and after major maintenance.

(b) *Measurement principles.* Hydrocarbons and $H_2O$ can positively interfere with an NDUV analyzer by causing a response similar to $NO_X$. If the NDUV analyzer uses compensation algorithms that utilize measurements of other gases to meet this interference verification, simultaneously conduct such measurements to test the algorithms during the analyzer interference verification.

(c) *System requirements.* A $NO_X$ NDUV analyzer must have combined $H_2O$ and HC interference within ±2% of the flow-weighted mean concentration of $NO_X$ expected at the standard, though we strongly recommend keeping interference within ±1%.

(d) *Procedure.* Perform the interference verification as follows:

(1) Start, operate, zero, and span the $NO_X$ NDUV analyzer according to the instrument manufacturer's instructions.

(2) We recommend that you extract engine exhaust to perform this verification. Use a CLD that meets the specifications of subpart C of this part to quantify $NO_X$ in the exhaust. Use the CLD response as the reference value. Also measure HC in the exhaust with a FID analyzer that meets the specifications of subpart C of this part. Use the FID response as the reference hydrocarbon value.

(3) Upstream of any sample dryer, if one is used during testing, introduce the engine exhaust to the NDUV analyzer.

(4) Allow time for the analyzer response to stabilize. Stabilization time may include time to purge the transfer line and to account for analyzer response.

(5) While all analyzers measure the sample's concentration, record 30 seconds of sampled data, and calculate the arithmetic means for the three analyzers.

(6) Subtract the CLD mean from the NDUV mean.

(7) Multiply this difference by the ratio of the flow-weighted mean HC concentration expected at the standard to the HC concentration measured during the verification. The analyzer meets the interference verification of this section if this result is within ±2% of the HC concentration expected at the standard.

(e) *Exceptions.* The following exceptions apply:

(1) You may omit this verification if you can show by engineering analysis that for your $NO_X$ sampling system and your emission calculations procedures, the the combined HC and $H_2O$ interference for your $NO_X$ NDUV analyzer always affects your brake-specific $NO_X$ emission results by less than 0.5% of the applicable $NO_X$ standard.

(2) You may use a $NO_X$ NDUV analyzer that you determine does not meet this verification, as long as you try to correct the problem and the measurement deficiency does not adversely affect your ability to show that engines comply with all applicable emission standards.

**§ 1065.376 Chiller $NO_2$ penetration.**

(a) *Scope and frequency.* If you use a chiller to dry a sample upstream of a $NO_X$ measurement instrument, but you don't use an $NO_2$-to-NO converter upstream of the chiller, you must perform this verification for chller $NO_2$ penetration. Perform this verification after initial installation and after major maintenance.

(b) *Measurement principles.* A chiller removes water, which can otherwise interfere with a $NO_X$ measurement. However, liquid water in an improperly designed chiller can remove $NO_2$ from the sample. If a chiller is used without an $NO_2$-to-NO converter upstream, it could therefore remove $NO_2$ from the sample prior $NO_X$ measurement.

(c) *System requirements.* A chiller must allow for measuring at least 95% of the total $NO_2$ at the maximum expected concentration of $NO_2$.

(d) *Procedure.* Use the following procedure to verify chiller performance:

(1) *Instrument setup.* Follow the analyzer and chiller manufacturers' start-up and operating instructions. Adjust the analyzer and chiller as needed to optimize performance.

(2) *Equipment setup.* Connect an ozonator's inlet to a zero-air or oxygen source and connect its outlet to one port of a three-way tee fitting. Connect an NO span gas to another port of the tee. Connect a heated line at 100 °C to the last port, and connect a heated three-way tee to the other end of the line. Connect a dewpoint generator, set at a dewpoint of 50 °C, to one end of a heated line at 100 °C. Connect the other end of the line to the heated tee and connect a third 100 °C heated line to the chiller inlet. Provide an overflow vent line at the chiller inlet.

(3) *Adjustments.* For the following adjustment steps, set the analyzer to measure only NO (*i.e.*, NO mode), or only read the NO channel of the analyzer:

(i) With the dewpoint generator and the ozonator off, adjust the NO and zero-gas flows so the NO concentration at the analyzer is at least two times the peak total $NO_X$ concentration expected during testing at the standard. Verify that gas is flowing out of the overflow vent line.

(ii) Turn on the dewpoint generator and adjust its flow so the NO concentration at the analyzer is at least at the peak total $NO_X$ concentration expected during testing at the standard. Verify that gas is flowing out of the overflow vent line.

(iii) Turn on the ozonator and adjust the ozonator so the NO concentration measured by the analyzer decreases by the same amount as the maximum concentration of $NO_2$ expected during testing. This ensures that the ozonator is generating $NO_2$ at the maximum concentration expected during testing.

(4) *Data collection.* Maintain the ozonator adjustment in paragraph (d)(3) of this section, and keep the $NO_X$ analyzer in the NO only mode or only read the NO channel of the analyzer.

(i) Allow for stabilization, accounting only for transport delays and instrument response.

(ii) Calculate the mean of 30 seconds of sampled data from the analyzer and record this value as $NO_{ref}$.

(iii) Switch the analyzer to the total $NO_X$ mode, (that is, sum the NO and $NO_2$ channels of the analyzer) and allow for stabilization, accounting only for transport delays and instrument response.

(iv) Calculate the mean of 30 seconds of sampled data from the analyzer and record this value as $NOx_{meas}$.

(v) Turn off the ozonator and allow for stabilization, accounting only for transport delays and instrument response.

(vi) Calculate the mean of 30 seconds of sampled data from the analyzer and record this value as $NO_{xref}$.

(5) *Performance evaluation.* Divide the quantity of ($NO_{xmeas} - NO_{ref}$) by the quantity of ($NO_{xref} - NO_{ref}$). If the result

is less than 95%, repair or replace the chiller.

(e) *Exceptions.* The following exceptions apply:

(1) You may omit this verification if you can show by engineering analysis that for your $NO_X$ sampling system and your emission calculations procedures, the the chiller always affects your brake-specific $NO_X$ emission results by less than 0.5% of the applicable $NO_X$ standard.

(2) You may use a chiller that you determine does not meet this verification, as long as you try to correct the problem and the measurement deficiency does not adversely affect your ability to show that engines comply with all applicable emission standards.

**§ 1065.378 $NO_2$-to-NO converter conversion verification.**

(a) *Scope and frequency.* If you use an analyzer that measures only NO to determine $NO_X$, you must use an $NO_2$-to-NO converter upstream of the analyzer. Perform this verification after installing the converter, after major maintenance and within 35 days before an emission test. This verification must be repeated at this frequency to verify that the catalytic activity of the $NO_2$-to-NO converter has not deteriorated.

(b) *Measurement principles.* An $NO_2$-to-NO converter allows an analyzer that measures only NO to determine total $NO_X$ by converting the $NO_2$ in exhaust to NO.

(c) *System requirements.* An $NO_2$-to-NO converter must allow for measuring at least 95% of the total $NO_2$ at the maximum expected concentration of $NO_2$.

(d) *Procedure.* Use the following procedure to verify the performance of a $NO_2$-to-NO converter:

(1) *Instrument setup.* Follow the analyzer and $NO_2$-to-NO converter manufacturers' start-up and operating instructions. Adjust the analyzer and converter as needed to optimize performance.

(2) *Equipment setup.* Connect an ozonator's inlet to a zero-air or oxygen source and connect its outlet to one port of a 4-way cross fitting. Connect an NO span gas to another port. Connect the $NO_2$-to-NO converter inlet to another port, and connect an overflow vent line to the last port.

(3) *Adjustments.* Take the following steps to make adjustments:

(i) With the $NO_2$-to-NO converter in the bypass mode (*i.e.*, NO mode) and the ozonator off, adjust the NO and zero-gas flows so the NO concentration at the analyzer is at the peak total $NO_X$ concentration expected during testing. Verify that gas is flowing out of the overflow vent.

(ii) With the $NO_2$-to-NO converter still in the bypass mode, turn on the ozonator and adjust the ozonator so the NO concentration measured by the analyzer decreases by the same amount as maximum concentration of $NO_2$ expected during testing. This ensures that the ozonator is generating $NO_2$ at the maximum concentration expected during testing.

(4) *Data collection.* Maintain the ozonator adjustment in paragraph (d)(3) of this section, and keep the $NO_X$ analyzer in the NO only mode (*i.e.*, bypass the $NO_2$-to-NO converter).

(i) Allow for stabilization, accounting only for transport delays and instrument response.

(ii) Calculate the mean of 30 seconds of sampled data from the analyzer and record this value as $NO_{ref}$.

(iii) Switch the analyzer to the total $NO_X$ mode (that is, sample with the $NO_2$-to-NO converter) and allow for stabilization, accounting only for transport delays and instrument response.

(iv) Calculate the mean of 30 seconds of sampled data from the analyzer and record this value as $NO_{xmeas}$.

(v) Turn off the ozonator and allow for stabilization, accounting only for transport delays and instrument response.

(vi) Calculate the mean of 30 seconds of sampled data from the analyzer and record this value as $NO_{xref}$.

(5) *Performance evaluation.* Divide the quantityof ($NO_{xmeas} - NO_{ref}$)by the quantity of ($NO_{xref} - NO_{ref}$). If the result is less than 95%, repair or replace the $NO_2$-to-NO converter.

(e) *Exceptions.* The following exceptions apply:

(1) You may omit this verification if you can show by engineering analysis that for your $NO_x$ sampling system and your emission calculations procedures, the converter always affects your brake-specific $NO_x$ emission results by less than 0.5% of the applicable $NO_x$ standard.

(2) You may use a converter that you determine does not meet this verification, as long as you try to correct the problem and the measurement deficiency does not adversely affect your ability to show that engines comply with all applicable emission standards.

## PM Measurements

**§ 1065.390 PM balance verifications and weighing process verification.**

(a) *Scope and frequency.* This section describes three verifications. The first verification requires an independent verification of PM balance performance, and this must be performed within 370 days before emission testing. The second verification requires zeroing and spanning the balance, and this must be performed within 12 h before weighing. The third verification requires comparing a current mass determination of pooled reference samples with the previous mass determination of the pooled reference samples. This verification must be performed within 12 h before weighing.

(b) *Independent verification.* Have the balance manufacturer (or a representative approved by the balance manufacturer) verify the balance performance within 370 days of testing.

(c) *Zeroing and spanning.* You must verify balance performance by zeroing and spanning it with at least one calibration weight, and any weights you use must that meet the specifications in § 1065.790 to perform this verification.

(1) Use a manual procedure in which you zero the balance and span the balance with at least one calibration weight. If you normally use mean values by repeating the weighing process to improve the accuracy and precision of PM measurements, use the same process to verify balance performance.

(2) You may use an automated procedure to verify balance performance. For example many balances have internal calibration weights that are used automatically to verify balance performance. Note that if you use internal balance weights, the weights must meet the specifications in § 1065.790 to perform this verification.

(d) *Reference sample weighing.* You must also verify the PM-weighing environment and weighing process by weighing reference PM sample media. Repeated weighing of a reference mass must return the same value within ±10 μg or ±10% of the net PM mass expected at the standard (if known), whichever is higher. Perform this verification as follows:

(1) Keep at least two samples of unused PM sample media in the PM-stabilization environment. Use these as references. If you collect PM with filters, select unused filters of the same material and size for use as references. You may periodically replace references, using good engineering judgment.

(2) Stabilize references in the PM stabilization environment. Consider references stabilized if they have been in the PM-stabilization environment for a minimum of 30 min, and the PM-stabilization environment has been within the specifications of

§ 1065.190(d) for at least the preceding 60 min.

(3) Exercise the balance several times with a reference sample. We recommend weighing ten samples without recording the values.

(4) Zero and span the balance.

(5) Weigh each of the reference samples and record their masses. We recommend using substitution weighing as described in § 1065.590(j). If you normally use mean values by repeating the weighing process to improve the accuracy and precision of PM measurements, use the same process to measure reference masses.

(6) Record the balance environment dewpoint, ambient temperature, and atmospheric pressure.

(7) Use the recorded ambient conditions to correct results for buoyancy as described in § 1065.690. Record the buoyancy-corrected mass of each of the references.

(8) Subtract each of the reference's buoyancy-corrected masses from the most recent previous determinations of their masses.

(9) If the mean of the reference's masses changes by more than that allowed under paragraph (d) of this section, then invalidate all PM results that were determined between the two times that the reference masses were determined.

### § 1065.395 Inertial PM balance verifications.

This section describes how to verify the performance of an inertial PM balance.

(a) *Independent verification.* Have the balance manufacturer (or a representative approved by the balance manufacturer) verify the inertial balance performance within 370 days before testing.

(b) *Other verifications.* Perform other verifications using good engineering judgment and instrument manufacturer recommendations.

## Subpart E—Engine Selection, Preparation, and Maintenance

### § 1065.401 Test engine selection.

While all engine configurations within a certified engine family must comply with the applicable standards in the standard-setting part, you need not test each configuration for certification.

(a) Select an engine configuration within the engine family for testing, as follows:

(1) Test the engine that we specify, whether we issue general guidance or give you specific instructions.

(2) If we do not tell you which engine to test, follow any instructions in the standard-setting part.

(3) If we do not tell you which engine to test and the standard-setting part does not include specifications for selecting test engines, use good engineering judgment to select the engine configuration within the engine family that is most likely to exceed an emission standard.

(b) In the absence of other information, the following characteristics are appropriate to consider when selecting the engine to test:

(1) Maximum fueling rates.

(2) Maximum loads.

(3) Maximum in-use speeds.

(4) Highest sales volume.

(c) For our testing, we may select any engine configuration within the engine family.

### § 1065.405 Test engine preparation and maintenance.

(a) If you are testing an emission-data engine for certification, make sure it is built to represent production engines. This includes governors that you normally install on production engines. If you do not install governors on production engines, simulate a governor that is representative of a governor that others will install on your production engines.

(b) Run the test engine, with all emission-control systems operating, long enough to stabilize emission levels. Unless otherwise specified in the standard-setting part, you may consider emission levels stable without measurement if you accumulate 12 h of operation for a spark-ignition engine or 125 h for a compression-ignition engine. If the engine needs more or less operation to stabilize emission levels, record your reasons and the methods for doing this, and give us these records if we ask for them. To ensure consistency between low-hour engines and deterioration factors, you must use the same stabilization procedures for all emission-data engines within an engine family.

(c) Record any maintenance, modifications, parts changes, diagnostic or emissions testing and document the need for each event. You must provide this information if we request it.

(d) For accumulating operating hours on your test engines, select engine operation that represents normal in-use operation for the engine family.

(e) If your engine will be used in a vehicle equipped with a canister for storing evaporative hydrocarbons for eventual combustion in the engine, attach a canister to the engine before running an emission test. You may request to omit using an evaporative canister during testing if you can show that it would not affect your ability to show compliance with the applicable emission standards. You do not have to accumulate engine operation before emission testing with an installed canister. Prior to an emission test, use the following steps to attach a canister to your engine:

(1) Use a canister and plumbing arrangement that represents the in-use configuration of the largest capacity canister in all expected applications.

(2) Use a canister that is fully loaded with fuel vapors.

(3) Connect the canister's purge port to the engine.

(4) Plug the canister port that is normally connected to the fuel tank.

### § 1065.410 Maintenance limits for stabilized test engines.

(a) After you stabilize the test engine's emission levels, you may do maintenance as allowed by the standard-setting part. However, you may not do any maintenance based on emission measurements from the test engine (*i.e.*, unscheduled maintenance).

(b) For any critical emission-related maintenance—other than what we specifically allow in the standard-setting part—you must completely test an engine for emissions before and after doing any maintenance that might affect emissions, unless we waive this requirement.

(c) Keep a record of the inspection and update your application to document any changes as a result of the inspection. You may use equipment, instruments, or tools to identify bad engine components. Any equipment, instruments, or tools used for scheduled maintenance on emission data engines must be available to dealerships and other service outlets.

(d) You may adjust or repair an emission-data engine as long as you document these changes in your application.

(e) If we determine that a part failure, system malfunction, or associated repairs have made the engine's emission controls unrepresentative of production engines, you may no longer use it as an emission-data. Also, if your test engine has a major mechanical failure that requires you to take it apart, you may no longer use it as an emission-data engine.

### § 1065.415 Durability demonstration.

If the standard-setting part requires durability testing, you must accumulate service in a way that represents how you expect the engine to operate in use. You may accumulate service hours using an accelerated schedule, such as through continuous operation or by using duty cycles that are more aggressive than in-use operation.

(a) *Maintenance.* The following limits apply to the maintenance that we allow you to do on an emission-data engine:

(1) You may perform scheduled maintenance that you recommend to operators, but only if it is consistent with the standard-setting part's restrictions.

(2) You may perform additional maintenance only as specified in § 1065.410 or allowed by the standard-setting part.

(3) We may approve additional maintenance to your durability engine if all the following occur:

(i) Something clearly malfunctions—such as persistent misfire, engine stall, overheating, fluid leaks, or loss of oil pressure—and needs maintenance or repair.

(ii) You provide us an opportunity to verify the extent of the malfunction before you do the maintenance.

(b) *Emission measurements.* Perform emission tests following the provisions of the standard setting part and this part, as applicable. Perform emission tests to determine deterioration factors consistent with good engineering judgment. Evenly space any tests between the first and last test points throughout the durability period, unless we approve otherwise.

## Subpart F—Performing an Emission Test in the Laboratory

### § 1065.501 Overview.

(a) Use the procedures detailed in this subpart to measure engine emissions in a laboratory setting. This section describes how to:

(1) Map your engine by recording specified speed and torque data, as measured from the engine's primary output shaft.

(2) Transform normalized duty cycles into reference duty cycles for your engine by using an engine map.

(3) Prepare your engine, equipment, and measurement instruments for an emission test.

(4) Perform pre-test procedures to verify proper operation of certain equipment and analyzers.

(5) Record pre-test data.

(6) Start or restart the engine and sampling systems.

(7) Sample emissions throughout the duty cycle.

(8) Record post-test data.

(9) Perform post-test procedures to verify proper operation of certain equipment and analyzers.

(10) Weigh PM samples.

(b) A laboratory emission test generally consists of measuring emissions and other parameters while an engine follows one or more duty cycles that are specified in the standard-setting part. There are two general types of duty cycles:

(1) *Transient cycles.* Transient duty cycles are typically specified in the standard-setting part as a second-by-second sequence of speed commands and torque (or power) commands. Operate an engine over a transient cycle such that the speed and torque of the engine's primary output shaft follows the target values. Proportionally sample emissions and other parameters and use the calculations in subpart G of this part to calculate emissions. Start a transient test according to the standard-setting part, as follows:

(i) A cold-start transient cycle where you start to measure emissions just before starting a cold engine.

(ii) A hot-start transient cycle where you start to measure emissions just before starting a warmed-up engine.

(iii) A hot running transient cycle where you start to measure emissions after an engine is started, warmed up, and running.

(2) *Steady-state cycles.* Steady-state duty cycles are typically specified in the standard-setting part as a list of discrete operating points (modes), where each operating point has one value of a speed command and one value of a torque (or power) command. Ramped-modal cycles for steady-state testing also list test times for each mode and ramps of speed and torque to follow between modes. Start a steady-state cycle as a hot running test, where you start to measure emissions after an engine is started, warmed up and running. You may run a steady-state duty cycle as a discrete-mode cycle or a ramped-modal cycle, as follows:

(i) *Discrete-mode cycles.* Before emission sampling, stabilize an engine at the first discrete mode. Sample emissions and other parameters for that mode and then stop emission sampling. Record mean values for that mode, and then stabilize the engine at the next mode. Continue to sample each mode discretely and calculate weighted emission results according to the standard-setting part.

(ii) *Ramped-modal cycles.* Perform ramped-modal cycles similar to the way you would perform transient cycles, except that ramped-modal cycles involve mostly steady-state engine operation. Perform a ramped-modal cycle as a sequence of second-by-second speed commands and torque (or power) commands.Proportionally sample emissions and other parameters during the cycle and use the calculations in subpart G of this part to calculate emissions.

(c) Other subparts in this part identify how to select and prepare an engine for testing (subpart E), how to perform the required engine service accumulation (subpart E), and how to calculate emission results (subpart G).

(d) Subpart J of this part describes how to perform field testing.

### § 1065.510 Engine mapping.

(a) *Scope and frequency.* An engine map is a data set that consists of a series of paired data points that represent the maximum brake torque versus engine speed, measured at the engine's primary output shaft. Map your engine while it is connected to a dynamometer. Configure any auxiliary work inputs and outputs such as hybrid, turbo-compounding, or thermoelectric systems to represent their in-use configurations, and use the same configuration for emission testing. See Figure 1 of § 1065.210. This may involve configuring initial states of charge and rates and times of auxiliary-work inputs and outputs. We recommend that you contact the Designated Compliance Officer before testing to determine how you should configure any auxiliary-work inputs and outputs. Use the most recent engine map to transform a normalized duty cycle from the standard-setting part to a reference duty cycle specific to your engine. Normalized duty cycles are specified in the standard-setting part. You may update an engine map at any time by repeating the engine-mapping procedure. You must map or re-map an engine before a test if any of the following apply:

(1) If you have not performed an initial engine map.

(2) If the atmospheric pressure near the engine's air inlet is not within ±5 kPa of the atmospheric pressure recorded at the time of the last engine map.

(3) If the engine or emission-control system has undergone changes that might affect maximum torque performance. This includes changing the configuration of auxiliary work inputs and outputs.

(4) If you capture an incomplete map on your first attempt or you do not complete a map within the specified time tolerance. You may repeat mapping as often as necessary to capture a complete map within the specified time.

(b) *Mapping variable-speed engines.* Map variable-speed engines as follows:

(1) Record the atmospheric pressure.

(2) Warm up the engine by operating it. We recommend operating the engine at any speed and at approximately 75% of the its expected maximum power. Continue the warm-up until either the

engine coolant, block, or head absolute temperature is within ±2% of its mean value for at least 2 min or until the engine thermostat controls engine temperature.

(3) Operate the engine at its warm idle speed.

(4) Set operator demand to maximum and control engine speed at (95 ±1)% of its warm idle speed for at least 15 seconds. For engines with reference duty cycles whose lowest speed is greater than warm idle speed, you may start the map at (95 ±1)% of the lowest reference speed.

(5) Perform one of the following:

(i) For any engine subject only to steady-state duty cycles (*i.e.*, discrete-mode or ramped-modal), you may perform an engine map by using discrete speeds. Select at least 20 evenly spaced setpoints between warm idle and the highest speed above maximum mapped power at which (50 to 75)% of maximum power occurs. If this highest speed is unsafe or unrepresentative (e.g, for ungoverned engines), use good engineering judgment to map up to the maximum safe speed or the maximum representative speed. At each setpoint, stabilize speed and allow torque to stabilize. Record the mean speed and torque at each setpoint. We recommend that you stabilize an engine for at least 15 seconds at each setpoint and record the mean feedback speed and torque of the last (4 to 6) seconds. Use linear interpolation to determine intermediate speeds and torques. Use this series of speeds and torques to generate the power map as described in paragraph (e) of this section.

(ii) For any variable-speed engine, you may perform an engine map by using a continuous sweep of speed by continuing to record the mean feedback speed and torque at 1 Hz or more frequently and increasing speed at a constant rate such that it takes (4 to 6) min to sweep from 95% of warm idle to the highest speed above maximum power at which (50 to 75)% of maximum power occurs. If this highest speed is unsafe or unrepresentative (e.g, for ungoverned engines), use good engineering judgment to map up to the maximum safe speed or the maximum representative speed. Stop recording after you complete the sweep. From the series of mean speed and maximum torque values, use linear interpolation to determine intermediate values. Use this series of speeds and torques to generate the power map as described in paragraph (e) of this section.

(c) *Negative torque mapping.* If your engine is subject to a reference duty cycle that specifies negative torque values, generate a motoring map by any of the following procedures:

(1) Multiply the positive torques from your map by −40%. Use linear interpolation to determine intermediate values.

(2) Map the amount of negative torque required to motor the engine by repeating paragraph (b) of this section with minimum operator demand.

(3) Determine the amount of negative torque required to motor the engine at the following two points: At warm idle and at the highest speed above maximum power at which (50 to 75)% of maximum power occurs. If this highest speed is unsafe or unrepresentative (e.g, for ungoverned engines), use good engineering judgment to map up to the maximum safe speed or the maximum representative speed. Operate the engine at these two points at minimum operator demand. Use linear interpolation to determine intermediate values.

(d) *Mapping constant-speed engines.* For constant-speed engines, generate a map as follows:

(1) Record the atmospheric pressure.

(2) Warm up the engine by operating it. We recommend operating the engine at approximately 75% of the engine's expected maximum power. Continue the warm-up until either the engine coolant, block, or head absolute temperature is within ±2% of its mean value for at least 2 min or until the engine thermostat controls engine temperature.

(3) You may operate the engine with a production constant-speed governor or simulate a constant-speed governor by controlling engine speed with an operator demand control system described in § 1065.110. Use either isochronous or speed-droop governor operation, as appropriate.

(4) With the governor or simulated governor controlling speed using operator demand, operate the engine at no-load governed speed (at high speed, not low idle) for at least 15 seconds.

(5) Record at 1 Hz the mean of feedback speed and torque. Use the dynamometer to increase torque at a constant rate. Unless the standard-setting part specifies otherwise, complete the map such that it takes (2 to 4) min to sweep from no-load governed speed to the lowest speed below maximum mapped power at which the engine develops (85–95)% of maximum mapped power. You may map your engine to lower speeds. Stop recording after you complete the sweep. Use this series of speeds and torques to generate the power map as described in paragraph (e) of this section.

(e) *Power mapping.* For all engines, create a power-versus-speed map by transforming torque and speed values to corresponding power values. Use the mean values from the recorded map data. Do not use any interpolated values. Multiply each torque by its corresponding speed and apply the appropriate conversion factors to arrive at units of power (kW).

(f) *Measured and declared test speeds and torques.* You may use test speeds and torques that you declare instead of measured speeds and torques if you declare them before engine mapping and they meet the criteria in this paragraph (f). Otherwise, you must use measured speed and torque.

(1) *Measured speeds and torques.* Determine the applicable measured speeds and torques according to § 1065.610:

(i) Measured maximum test speed for variable-speed engines.

(ii) Measured maximum test torque for constant-speed engines.

(iii) Measured ''A'', ''B'', and ''C'' speeds for steady-state tests.

(iv) Measured intermediate speed for steady-state tests.

(2) *Required declared speeds.* You must declare the following speeds:

(i) Warmed-up, low-idle speed for variable-speed engines. Declare this speed in a way that is representative of in-use operation. For example, if your engine is typically connected to an automatic transmission or a hydrostatic transmission, declare this speed at the idle speed at which your engine operates when the transmission is engaged.

(ii) Warmed-up, no-load, high-idle speed for constant-speed engines.

(3) *Optional declared speeds.* You may declare an enhanced idle speed according to § 1065.610. You may use a declared value for any of the following as long as the declared value is within (97.5 to 102.5)% of its corresponding measured value:

(i) Measured maximum test speed for variable-speed engines.

(ii) Measured intermediate speed for steady-state tests.

(iii) Measured ''A'', ''B'', and ''C'' speeds for steady-state tests.

(4) *Declared torques.* You may declare an enhanced idle torque according to § 1065.610. You may declare maximum test torque as long as it is within (95 to 100)% of the measured value.

(g) *Other mapping procedures.* You may use other mapping procedures if you believe the procedures specified in this section are unsafe or unrepresentative for your engine. Any alternate techniques must satisfy the intent of the specified mapping

procedures, which is to determine the maximum available torque at all engine speeds that occur during a duty cycle. Report any deviations from this section's mapping procedures.

**§ 1065.512 Duty cycle generation.**

(a) The standard-setting part defines applicable duty cycles in a normalized format. A normalized duty cycle consists of a sequence of paired values for speed and torque or for speed and power.

(b) Transform normalized values of speed, torque, and power using the following conventions:

(1) *Engine speed for variable-speed engines.* For variable-speed engines, normalized speed may be expressed as a percentage between idle speed and maximum test speed, $f_{ntest}$, or speed may be expressed by referring to a defined speed by name, such as warm idle,'' ''intermediate speed,'' or ''A,'' ''B,'' or ''C'' speed. Section 1065.610 describes how to transform these normalized values into a sequence of reference speeds, $f_{nref}$. Note that the cycle-validation criteria in § 1065.514 allow an engine to govern itself at its in-use idle speed. This allowance permits you to test engines with enhanced-idle devices and to simulate the effects of transmissions such as automatic transmissions.

(2) *Engine torque for variable-speed engines.* For variable-speed engines, normalized torque is expressed as a percentage of the mapped torque at the corresponding reference speed. Section 1065.610 describes how to transform normalized torques into a sequence of reference torques, $T_{ref}$. Section 1065.610 also describes under what conditions you may command $T_{ref}$ greater than the reference torque you calculated from a normalized duty cycle. This provision permits you to command $T_{ref}$ values representing curb-idle transmission torque (CITT).

(3) *Engine torque for constant-speed engines.* For constant-speed engines, normalized torque is expressed as a percentage of maximum test torque, $T_{test}$. Section 1065.610 describes how to transform normalized torques into a sequence of reference torques, $T_{ref}$. Section 1065.610 also describes under what conditions you may command $T_{ref}$ greater than 0 N·m when a normalized duty cycle specifies a 0% torque command.

(4) *Engine power.* For all engines, normalized power is expressed as a percentage of mapped power at maximum test speed, $f_{ntest}$. Section 1065.610 describes how to transform these normalized values into a sequence of reference powers, $P_{ref}$. You may convert these reference powers to reference speeds and torques for operator demand and dynamometer control.

(c) For variable-speed engines, command reference speeds and torques sequentially to perform a duty cycle. Issue speed and torque commands at a frequency of at least 5 Hz for transient cycles and at least 1 Hz for steady-state cycles (*i.e.*, discrete-mode and ramped-modal). For transient cycles, linearly interpolate between the 1 Hz reference values specified in the standard-setting part to determine the 5 Hz reference speeds and torques. During an emission test, record the 1 Hz mean values of the reference speeds and torques and the feedback speeds and torques. Use these recorded values to calculate cycle-validation statistics and total work.

(d) For constant-speed engines, operate the engine with the same production governor you used to map the engine in § 1065.525 or simulate the in-use operation of a governor the same way you simulated it to map the engine in § 1065.525. Command reference torque values sequentially to perform a duty cycle. Issue torque commands at a frequency of at least 5 Hz for transient cycles and at least 1 Hz for steady-state cycles (i.e, discrete-mode, ramped-modal). For transient cycles, linearly interpolate between the 1 Hz reference values specified in the standard-setting part to determine the 5 Hz reference torque values. During an emission test, record the 1 Hz mean values of the reference torques and the feedback speeds and torques. Use these recorded values to calculate cycle-validation statistics and total work.

(e) You may perform practice duty cycles with the test engine to optimize operator demand and dynamometer controls to meet the cycle-validation criteria specified in § 1065.514.

**§ 1065.514 Cycle-validation criteria.**

This section describes how to determine if the engine's operation during the test adequately matched the reference duty cycle. This section applies only to speed, torque, and power from the engine's primary output shaft. Other work inputs and outputs are not subject to cycle-validation criteria. For any data required in this section, use the duty cycle reference and feedback values that you recorded during a test interval.

(a) *Testing performed by EPA.* Our tests must meet the specifications of paragraph (g) of this section, unless we determine that failing to meet the specifications is related to engine performance rather than to shortcomings of the dynamometer or other laboratory equipment.

(b) *Testing performed by manufacturers.* Emission tests that meet the specifications of paragraph (g) of this section satisfy the standard-setting part's requirements for duty cycles. You may ask to use a dynamometer or other laboratory equipment that cannot meet those specifications. We will approve your request as long as using the alternate equipment does not affect your ability to show compliance with the applicable emission standards.

(c) *Time-alignment.* Because time lag between feedback values and the reference values may bias cycle-validation results, you may advance or delay the entire sequence of feedback engine speed and torque pairs to synchronize them with the reference sequence.

(d) *Calculating work.* Before calculating work values, omit any points recorded during engine cranking and starting. Cranking and starting includes any time when an engine starter is engaged, any time when the engine is motored with a dynamometer for the sole purpose of starting the engine, and any time during operation before reaching idle speed. See § 1065.525(a) and (b) for more information about engine cranking. After omitting points recorded during engine cranking and starting, but before omitting any points under paragraph (e) of this section, calculate total work, W, based on the feedback values and reference work, $W_{ref}$, based on the reference values, as described in § 1065.650.

(e) *Omitting additional points.* Besides engine cranking, you may omit additional points from cycle-validation statistics as described in the following table:

TABLE 1 OF § 1065.514.—PERMISSIBLE CRITERIA FOR OMITTING POINTS FROM DUTY-CYCLE REGRESSION STATISTICS

| When operator demandis at its. . . | you may omit. . . | if. . . |
|---|---|---|
| For reference duty cycles that are specified in terms of speed and torque ($f_{nref}$, $T_{ref}$). | | |
| minimum | power and torque | $T_{ref} < 0\%$ (motoring). |
| minimum | power and speed | $f_{nref} = 0\%$ (idle) and $T_{ref} = 0\%$ (idle) and $T_{ref} - (2\% \cdot T_{max\ mapped}) < T < T_{ref} + (2\% \cdot T_{max\ mapped})$. |
| minimum | power and either torque or speed | $f_n > f_{nref}$ or $T > T_{ref}$ but not if $f_n > f_{nref}$ and $T > T_{ref}$. |
| maximum | power and either torque or speed | $f_n < f_{nref}$ or $T < T_{ref}$ but not if $f_n < f_{nef}$ and $T < T_{ref}$. |
| For reference duty cycles that are specified in terms of speed and power ($f_{nref}$, $P_{ref}$). | | |
| minimum | power and torque | $P_{ref} < 0\%$ (motoring). |
| minimum | power and speed | $f_{nref} = 0\%$ (idle) and $P_{ref} = 0\ \%$ (idle) and $P_{ref} - (2\% \cdot P_{max\ mapped}) < P < P_{ref} + (2\% \cdot P_{max\ mapped})$. |
| minimum | power and either torque or speed | $f_n > f_{nref}$ or $P > P_{ref}$ but not if $f_n > f_{nref}$ and $P > P_{ref}$. |
| maximum | power and either torque or speed | $f_n < f_{nref}$ or $P < P_{ref}$ but not if $f_n < f_{nef}$ and $P < P_{ref}$. |

(f) *Statistical parameters.* Use the remaining points to calculate regression statistics described in § 1065.602. Round calculated regression statistics to the same number of significant digits as the criteria to which they are compared. Refer to Table 2 of § 1065.514 for the criteria. Calculate the following regression statistics :

(1) Slopes for feedback speed, $a_{1fn}$, feedback torque, $a_{1T}$, and feedback power $a_{1P}$.

(2) Intercepts for feedback speed, $a_{0fn}$, feedback torque, $a_{0T}$, and feedback power $a_{0P}$.

(3) Standard estimates of error for feedback speed, $SEE_{fn}$, feedback torque, $SE_T$, and feedback power $SEE_P$.

(4) Coefficients of determination for feedback speed, $r^2_{fn}$, feedback torque, $r^2{}_T$, and feedback power $r^2{}_p$.

(g) *Cycle-validation criteria.* Unless the standard-setting part specifies otherwise, use the following criteria to validate a duty cycle:

(1) For variable-speed engines, apply all the statistical criteria in Table 2 of this section.

(2) For constant-speed engines, apply only the statistical criteria for torque in the Table 2 of this section.

TABLE 2 OF § 1065.514.—DEFAULT STATISTICAL CRITERIA FOR VALIDATING DUTY CYCLES

| Parameter | Speed | Torque | Power |
|---|---|---|---|
| Slope, $a_1$ | $0.950 \le a_1 < 1.030$ | $0.830 \le a_1 < 1.030$ | $0.830 \le a_1 < 1.030$. |
| Absolute value of intercept, $\|a_0\|$ | ≤ 10% of warm idle | ≤ 2.0% of maximum mapped torque. | ≤ 2.0% of maximum mapped power. |
| Standard error of estimate, SEE | ≤ 5.0% of maximum test speed | ≤ 10% of maximum mapped torque. | ≤ 10% of maximum mapped power. |
| Coefficient of determination, $r^2$ | ≥ 0.970 | ≥ 0.850 | ≥ 0.910. |

**§ 1065.520 Pre-test verification procedures and pre-test data collection.**

(a) If your engine must comply with a PM standard, follow the procedures for PM sample preconditioning and tare weighing according to § 1065.590.

(b) Unless the standard-setting part specifies different values, verify that ambient conditions are within the following tolerances before the test:

(1) Ambient temperature of (20 to 30) °C.

(2) Atmospheric pressure of (80.000 to 103.325) kPa and within ±5% of the value recorded at the time of the last engine map.

(3) Dilution air as specified in § 1065.140(b).

(c) You may test engines at any intake-air humidity, and we may test engines at any intake-air humidity.

(d) Verify that auxiliary-work inputs and outputs are configured as they were during engine mapping, as described in§ 1065.510(a).

(e) You may perform a final calibration of the speed, torque, and proportional-flow control systems, which may include performing practice duty cycles.

(f) You may perform the following recommended procedure to precondition sampling systems:

(1) Start the engine and use good engineering judgment to bring it to 100% torque at any speed above its peak-torque speed.

(2) Operate any dilution systems at their expected flow rates. Prevent aqueous condensation in the dilution systems.

(3) Operate any PM sampling systems at their expected flow rates.

(4) Sample PM for at least 10 min using any sample media. You may change sample media during preconditioning. You may discard preconditioning samples without weighing them.

(5) You may purge any gaseous sampling systems during preconditioning.

(6) You may conduct calibrations or verifications on any idle equipment or analyzers during preconditioning.

(7) Proceed with the test sequence described in § 1065.530(a)(1).

(g) After the last practice or preconditioning cycle before an emission test, verify the amount of contamination in the HC sampling system as follows:

(1) Select the HC analyzer range for measuring the flow-weighted mean concentration expected at the HC standard.

(2) Zero the HC analyzer at the analyzer zero or sample port. Note that FID zero and span balance gases may be any combination of purified air or purified nitrogen that meets the

specifications of § 1065.750. We recommend FID analyzer zero and span gases that contain approximately the flow-weighted mean concentration of $O_2$ expected during testing.

(3) Span the HC analyzer using span gas introduced at the analyzer span or sample port. Span on a carbon number basis of one ($C_1$). For example, if you use a $C_3H_8$ span gas of concentration 200 μmol/mol, span the FID to respond with a value of 600 μmol/mol.

(4) Overflow zero gas at the HC probe or into a fitting between the HC probe and its transfer line.

(5) Measure the HC concentration in the sampling system, as follows:

(i) For continuous sampling, record the mean HC concentration as overflow zero air flows.

(ii) For batch sampling, fill the sample medium and record its mean HC concentration.

(6) Record this value as the initial HC concentration, $x_{HCinit}$, and use it to correct measured values as described in § 1065.660.

(7) If $x_{HCinit}$ exceeds the greatest of the following values, determine the source of the contamination and take corrective action, such as purging the system during an additional preconditioning cycle or replacing contaminated portions:

(i) 2% of the flow-weighted mean concentration expected at the standard.

(ii) 2% of the flow-weighted mean concentration measured during testing.

(iii) For any compression-ignition engines, any two-stroke spark ignition engines, or 4-stroke spark-ignition engines that are less than 19 kW, 2 μmol/mol.

(8) If corrective action does not resolve the deficiency, you may request to use the contaminated system as an alternate procedure under § 1065.10.

**§ 1065.525 Engine starting, restarting, and shutdown.**

(a) Start the engine using one of the following methods:

(1) Start the engine as recommended in the owners manual using a production starter motor and adequately charged battery or a suitable power supply.

(2) Use the dynamometer to start the engine. To do this, motor the engine within ±25% of its typical in-use cranking speed. Stop cranking within 1 second of starting the engine.

(b) If the engine does not start after 15 seconds of cranking, stop cranking and determine why the engine failed to start, unless the owners manual or the service-repair manual describes the longer cranking time as normal.

(c) Respond to engine stalling with the following steps:

(1) If the engine stalls during warm-up before emission sampling begins, restart the engine and continue warm-up.

(2) If the engine stalls during preconditioning before emission sampling begins, restart the engine and restart the preconditioning sequence.

(3) If the engine stalls at any time after emission sampling begins for a transient test or ramped-modal cycle test, the test is void.

(4) If the engine stalls at any time after emission sampling begins for a discrete mode in a discrete-mode duty cycle test, void the test or perform the following steps to continue the test:

(i) Restart the engine.

(ii) Use good engineering judgment to restart the test sequence using the appropriate steps in § 1065.530(b)

(iii) Precondition the engine at the previous discrete mode for a similar amount of time compared with how long it was initially run.

(iv) Advance to the mode at which the engine stalled and continue with the duty cycle as specified in the standard-setting part.

(v) Complete the remainder of the test according to the requirements in this subpart.

(d) Shut down the engine according to the manufacturer's specifications.

**§ 1065.530 Emission test sequence.**

(a) Time the start of testing as follows:

(1) Perform one of the following if you precondition sampling systems as described in § 1065.520(f):

(i) For cold-start duty cycles, shut down the engine. Unless the standard-setting part specifies that you may only perform a natural engine cooldown, you may perform a forced engine cooldown. Use good engineering judgment to set up systems to send cooling air across the engine, to send cool oil through the engine lubrication system, to remove heat from coolant through the engine cooling system, and to remove heat from an exhaust aftertreatment system. In the case of a forced aftertreatment cooldown, good engineering judgment would indicate that you not start flowing cooling air until the aftertreatment system has cooled below its catalytic activation temperature. For platinum-group metal catalysts, this temperature is about 200 °C. Once the aftertreatment system has naturally cooled below its catalytic activation temperature, good engineering judgment would indicate that you use clean air with a temperature of at least 15 °C, and direct the air through the aftertreatment system in the normal direction of exhaust flow. Do not use any cooling procedure that results in unrepresentative emissions (see § 1065.10(c)(1)). You may start a cold-start duty cycle when the temperatures of an engine's lubricant, coolant, and aftertreatment systems are all between (20 and 30) °C.

(ii) For hot-start emission measurements, shut down the engine. Start a hot-start duty cycle within 20 min of engine shutdown.

(iii) For testing that involves hot-stabilized emission measurements, such as any steady-state testing, you may continue to operate the engine at $f_{ntest}$ and 100% torque if that is the first operating point. Otherwise, operate the engine at warm, idle or the first operating point of the duty cycle. In any case, start the emission test within 10 min after you complete the preconditioning procedure.

(2) For all other testing, perform one of the following:

(i) For cold-start duty cycles, prepare the engine according to paragraph (a)(1)(i) of this section.

(ii) For hot-start emission measurements, first operate the engine at any speed above peak-torque speed and at (65 to 85) % of maximum mapped power until either the engine coolant, block, or head absolute temperature is within ±2% of its mean value for at least 2 min or until the engine thermostat controls engine temperature. Shut down the engine. Start the duty cycle within 20 min of engine shutdown.

(iii) For testing that involves hot-stabilized emission measurements, bring the engine either to warm idle or the first operating point of the duty cycle. Start the test within 10 min of achieving temperature stability. Determine temperature stability either as the point at which the engine coolant, block, or head absolute temperature is within ±2% of its mean value for at least 2 min, or as the point at which the engine thermostat controls engine temperature.

(b) Take the following steps before emission sampling begins:

(1) For batch sampling, connect clean storage media, such as evacuated bags or tare-weighed filters.

(2) Start all measurement instruments according to the instrument manufacturer's instructions and using good engineering judgment.

(3) Start dilution systems, sample pumps, cooling fans, and the data-collection system.

(4) Pre-heat or pre-cool heat exchangers in the sampling system to within their operating temperature tolerances for a test.

(5) Allow heated or cooled components such as sample lines,

filters, chillers, and pumps to stabilize at their operating temperatures.

(6) Verify that there are no significant vacuum-side leaks according to § 1065.345.

(7) Adjust the sample flow rates to desired levels, using bypass flow, if desired.

(8) Zero or re-zero any electronic integrating devices, before the start of any test interval.

(9) Select gas analyzer ranges. You may use analyzers that automatically switch ranges during a test only if switching is performed by changing the span over which the digital resolution of the instrument is applied. During a test you may not switch the gains of an analyzer's analog operational amplifier(s).

(10) Zero and span all continuous analyzers using NIST-traceable gases that meet the specifications of § 1065.750. Span FID analyzers on a carbon number basis of one (1), $C_1$. For example, if you use a $C_3H_8$ span gas of concentration 200 μmol/mol, span the FID to respond with a value of 600 μmol/mol.

(11) We recommend that you verify gas analyzer response after zeroing and spanning by flowing a calibration gas that has a concentration near one-half of the span gas concentration. Based on the results and good engineering judgment, you may decide whether or not to re-zero, re-span, or re-calibrate a gas analyzer before starting a test.

(12) If you correct for dilution air background concentrations of engine exhaust constituents, start measuring and recording background concentrations.

(c) Start testing as follows:

(1) If an engine is already running and warmed up, and starting is not part of the duty cycle, perform the following for the various duty cycles.

(i) *Transient and steady-state ramped-modal cycles.* Simultaneously start running the duty cycle, sampling exhaust gases, recording data, and integrating measured values.

(ii) *Steady-state discrete-mode cycles.* Control speed and torque to the first mode in the test cycle. Follow the instructions in the standard-setting part to determine how long to stabilize engine operation at each mode and how long to sample emissions at each mode.

(2) If engine starting is part of the duty cycle, initiate data logging, sampling of exhaust gases, and integrating measured values before attempting to start the engine. Initiate the duty cycle when the engine starts.

(d) At the end of the test interval, continue to operate all sampling and dilution systems to allow the sampling system's response time to elapse. Then stop all sampling and recording, including the recording of background samples. Finally, stop any integrating devices and indicate the end of the duty cycle in the recorded data.

(e) Shut down the engine if you have completed testing or if it is part of the duty cycle.

(f) If testing involves another duty cycle after a soak period with the engine off, start a timer when the engine shuts down, and repeat the steps in paragraphs (b) through (e) of this section as needed.

(g) Take the following steps after emission sampling is complete:

(1) For any proportional batch sample, such as a bag sample or PM sample, verify that proportional sampling was maintained according to § 1065.545. Void any samples that did not maintain proportional sampling according to § 1065.545.

(2) Place any used PM samples into covered or sealed containers and return them to the PM-stabilization environment. Follow the PM sample post-conditioning and total weighing procedures in § 1065.595.

(3) As soon as practical after the duty cycle is complete but no later than 30 minutes after the duty cycle is complete, perform the following:

(i) Zero and span all batch gas analyzers.

(ii) Analyze any gaseous batch samples, including background samples.

(4) After quantifying exhaust gases, verify drift as follows:

(i) For batch and continuous gas analyzers, record the mean analyzer value after stabilizing a zero gas to the analyzer. Stabilization may include time to purge the analyzer of any sample gas, plus any additional time to account for analyzer response.

(ii) Record the mean analyzer value after stabilizing the span gas to the analyzer. Stabilization may include time to purge the analyzer of any sample gas, plus any additional time to account for analyzer response.

(iii) Use these data to validate and correct for drift as described in § 1065.550.

(h) Determine whether or not the test meets the cycle-validation criteria in § 1065.514.

(1) If the criteria void the test, you may retest using the same denormalized duty cycle, or you may re-map the engine, denormalize the reference duty cycle based on the new map and retest the engine using the new denormalized duty cycle.

(2) If the criteria void the test for a constant-speed engine only during commands of maximum test torque, you may do the following:

(i) Determine the first and last feedback speeds at which maximum test torque was commanded.

(ii) If the last speed is greater than or equal to 90% of the first speed, the test is void. You may retest using the same denormalized duty cycle, or you may re-map the engine, denormalize the reference duty cycle based on the new map and retest the engine using the new denormalized duty cycle.

(iii) If the last speed is less than 90% of the first speed, reduce maximum test torque by 5%, and proceed as follows:

(A) Denormalize the entire duty cycle based on the reduced maximum test torque according to § 1065.512.

(B) Retest the engine using the denormalized test cycle that is based on the reduced maximum test torque.

(C) If your engine still fails the cycle criteria, reduce the maximum test torque by another 5% of the original maximum test torque.

(D) If your engine fails after repeating this procedure four times, such that your engine still fails after you have reduced the maximum test torque by 20% of the original maximum test torque, notify us and we will consider specifying a more appropriate duty cycle for your engine under the provisions of § 1065.10(c).

**§ 1065.545 Validation of proportional flow control for batch sampling.**

For any proportional batch sample such as a bag or PM filter, demonstrate that proportional sampling was maintained using one of the following, noting that you may omit up to 5% of the total number of data points as outliers:

(a) For any pair of flow meters, use the 1 Hz (or more frequently) recorded sample and total flow rates with the statistical calculations in § 1065.602. Determine the standard error of the estimate, SEE, of the sample flow rate versus the total flow rate. For each test interval, demonstrate that SEE was less than or equal to 3.5% of the mean sample flow rate.

(b) For any pair of flow meters, use the 1 Hz (or more frequently) recorded sample and total flow rates to demonstrate that each flow rate was constant within ±2.5% of its respective mean or target flow rate. You may use the following options instead of recording the respective flow rate of each type of meter:

(1) *Critical-flow venturi option.* For critical-flow venturis, you may use the 1 Hz (or more frequently) recorded venturi-inlet conditions. Demonstrate that the flow density at the venturi inlet

was constant within ±2.5% of the mean or target density over each test interval. For a CVS critical-flow venturi, you may demonstrate this by showing that the absolute temperature at the venturi inlet was constant within ±4% of the mean or target absolute temperature over each test interval.

(2) *Positive-displacement pump option.* You may use the 1 Hz (or more frequently) recorded pump-inlet conditions. Demonstrate that the density at the pump inlet was constant within ±2.5% of the mean or target density over each test interval. For a CVS pump, you may demonstrate this by showing that the absolute temperature at the pump inlet was constant within ±2% of the mean or target absolute temperature over each test interval.

(c) Using good engineering judgment, demonstrate with an engineering analysis that the proportional-flow control system inherently ensures proportional sampling under all circumstances expected during testing. For example, you might use CFVs for both sample flow and total flow and demonstrate that they always have the same inlet pressures and temperatures and that they always operate under critical-flow conditions.

**§ 1065.550 Gas analyzer range validation, drift validation, and drift correction.**

(a) *Range validation.* If an analyzer operated above 100% of its range at any time during the test, perform the following steps:

(1) For batch sampling, re-analyze the sample using the lowest analyzer range that results in a maximum instrument response below 100%. Report the result from the lowest range from which the analyzer operates below 100% of its range for the entire test.

(2) For continuous sampling, repeat the entire test using the next higher analyzer range. If the analyzer again operates above 100% of its range, repeat the test using the next higher range. Continue to repeat the test until the analyzer operates at less than 100% of its range for the entire test.

(b) *Drift validation and drift correction.* Calculate two sets of brake-specific emission results. Calculate one set using the data before drift correction and the other set after correcting all the data for drift according to § 1065.672. Use the two sets of brake-specific emission results as follows:

(1) If the difference between the corrected and uncorrected brake-specific emissions are within ±4% of the uncorrected results for all regulated emissions, the test is validated for drift. If not, the entire test is void.

(2) If the test is validated for drift, you must use only the drift-corrected emission results when reporting emissions, unless you demonstrate to us that using the drift-corrected results adversely affects your ability to demonstrate whether or not your engine complies with the applicable standards.

**§ 1065.590 PM sample preconditioning and tare weighing.**

Before an emission test, take the following steps to prepare PM samples and equipment for PM measurements:

(a) Make sure the balance and PM-stabilization environments meet the periodic verifications in § 1065.390.

(b) Visually inspect unused sample media (such as filters) for defects.

(c) To handle PM samples, use electrically grounded tweezers or a grounding strap, as described in § 1065.190.

(d) Place unused sample media in one or more containers that are open to the PM-stabilization environment. If you are using filters, you may place them in the bottom half of a filter cassette.

(e) Stabilize sample media in the PM-stabilization environment. Consider an unused sample medium stabilized as long as it has been in the PM-stabilization environment for a minimum of 30 min, during which the PM-stabilization environment has been within the specifications of § 1065.190.

(f) Weigh the sample media automatically or manually, as follows:

(1) For automatic weighing, follow the automation system manufacturer's instructions to prepare samples for weighing. This may include placing the samples in a special container.

(2) For manual weighing, use good engineering judgment to determine if substitution weighing is necessary to show that an engine meets the applicable standard. You may follow the substitution weighing procedure in paragraph (j) of this section, or you may develop your own procedure.

(g) Correct the measured weight for buoyancy as described in § 1065.690. These buoyancy-corrected values are the tare masses of the PM samples.

(h) You may repeat measurements to determine mean masses. Use good engineering judgment to exclude outliers and calculate mean mass values.

(i) If you use filters as sample media, load unused filters that have been tare-weighed into clean filter cassettes and place the loaded cassettes in a covered or sealed container before taking them to the test cell for sampling. We recommend that you keep filter cassettes clean by periodically washing or wiping them with a compatible solvent applied using a lint-free cloth. Depending upon your cassette material, ethanol ($C_2H_5OH$) might be an acceptable solvent. Your cleaning frequency will depend on your engine's level of PM and HC emissions.

(j) Substitution weighing involves measurement of a reference weight before and after each weighing of a PM sample. While substitution weighing requires more measurements, it corrects for a balance's zero-drift and it relies on balance linearity only over a small range. This is most advantageous when quantifying net PM masses that are less than 0.1% of the sample medium's mass. However, it may not be advantageous when net PM masses exceed 1% of the sample medium's mass. The following steps are an example of substitution weighing:

(1) Use electrically grounded tweezers or a grounding strap, as described in § 1065.190.

(2) Use a static neutralizer as described in § 1065.190 to minimize static electric charge on any object before it is placed on the balance pan.

(3) Place on the balance pan a metal calibration weight that has a similar mass to that of the sample medium and meets the specifications for calibration weights in § 1065.790. If you use filters, the weight's mass should be about (80 to 100) mg for typical 47 mm diameter filters.

(4) Record the stable balance reading, then remove the calibration weight.

(5) Weigh an unused sample, record the stable balance reading and record the balance environment's dewpoint, ambient temperature, and atmospheric pressure.

(6) Reweigh the calibration weight and record the stable balance reading.

(7) Calculate the arithmetic mean of the two calibration-weight readings that you recorded immediately before and after weighing the unused sample. Subtract that mean value from the unused sample reading, then add the true mass of the calibration weight as stated on the calibration-weight certificate. Record this result. This is the unused sample's tare weight without correcting for buoyancy.

(8) Repeat these substitution-weighing steps for the remainder of your unused sample media.

(9) Follow the instructions given in paragraphs (g) through (i) of this section.

**§ 1065.595 PM sample post-conditioning and total weighing.**

(a) Make sure the weighing and PM-stabilization environments have met the periodic verifications in § 1065.390.

(b) In the PM-stabilization environment, remove PM samples from

sealed containers. If you use filters, you may remove them from their cassettes before or after stabilization. When you remove a filter from a cassette, separate the top half of the cassette from the bottom half using a cassette separator designed for this purpose.

(c) To handle PM samples, use electrically grounded tweezers or a grounding strap, as described in § 1065.190.

(d) Visually inspect PM samples. If PM ever contacts the transport container, cassette assembly, filter-separator tool, tweezers, static neutralizer, balance, or any other surface, void the measurements associated with that sample and clean the surface it contacted.

(e) To stabilize PM samples, place them in one or more containers that are open to the PM-stabilization environment, which is described in § 1065.190. A PM sample is stabilized as long as it has been in the PM-stabilization environment for one of the following durations, during which the stabilization environment has been within the specifications of § 1065.190:

(1) If you expect that a filter's total surface concentration of PM will be greater than about 0.473 mm/mm², expose the filter to the stabilization environment for at least 60 minutes before weighing.

(2) If you expect that a filter's total surface concentration of PM will be less than about 0.473 mm/mm², expose the filter to the stabilization environment for at least 30 minutes before weighing.

(3) If you are unsure of a filter's total surface concentration of PM, expose the filter to the stabilization environment for at least 60 minutes before weighing.

(f) Repeat the procedures in § 1065.590(f) through (i) to weigh used PM samples. Refer to a sample's post-test mass, after correcting for buoyancy, as its total mass.

(g) Subtract each buoyancy-corrected tare mass from its respective buoyancy-corrected total mass. The result is the net PM mass, $m_{PM}$. Use $m_{PM}$ in emission calculations in § 1065.650.

## Subpart G—Calculations and Data Requirements

### § 1065.601 Overview.

(a) This subpart describes how to—

(1) Use the signals recorded before, during, and after an emission test to calculate brake-specific emissions of each regulated constituent.

(2) Perform calculations for calibrations and performance checks.

(3) Determine statistical values.

(b) You may use data from multiple systems to calculate test results for a single emission test, consistent with good engineering judgment. You may not use test results from multiple emission tests to report emissions. We allow weighted means where appropriate. You may discard statistical outliers, but you must report all results.

(c) You may use any of the following calculations instead of the calculations specified in this subpart G:

(1) Mass-based emission calculations prescribed by the International Organization for Standardization (ISO), according to ISO 8178.

(2) Other calculations that you show are equivalent to within ±0.1% of the brake-specific emission results determined using the calculations specified in this subpart G.

### § 1065.602 Statistics.

(a) *Overview.* This section contains equations and example calculations for statistics that are specified in this part. In this section we use the letter "y" to denote a generic measured quantity, the superscript over-bar "–"to denote an arithmetic mean, and the subscript "$_{ref}$" to denote the reference quantity being measured.

(b) *Arithmetic mean.* Calculate an arithmetic mean, ȳ≤, as follows:

$$\bar{y} = \frac{\sum_{i=1}^{10} y_i}{N} \qquad \text{Eq. 1065.602-1}$$

*Example:*

N = 3

$y_1$ = 10.60

$y_2$ = 11.91

$y_N = y_3$ = 11.09

$$\bar{y} = \frac{10.60 + 11.91 + 11.09}{3}$$

ȳ≤ = 11.20

(c) *Standard deviation.* Calculate the standard deviation for a non-biased (*e.g.*, N–1) sample, σ, as follows:

$$\sigma_y = \sqrt{\frac{\sum_{i=1}^{N} (y_i - \bar{y})^2}{(N-1)}} \qquad \text{Eq. 1065.602-2}$$

*Example:*

N = 3

$y_1$ = 10.60

$y_2$ = 11.91

$y_N = y_3$ = 11.09

ȳ≤ = 11.20

$$\sigma_y = \sqrt{\frac{(10.60 - 11.2)^2 + (11.91 - 11.2)^2 + (11.09 - 11.2)^2}{2}}$$

$\sigma_y$ = 0.6619

(d) *Root mean square.* Calculate a root mean square, $rms_y$, as follows:

$$rms_y = \sqrt{\frac{1}{N}\sum_{i=1}^{N} y_i^2} \qquad \text{Eq. 1065.602-3}$$

*Example:*

N = 3

$y_1$ = 10.60

$y_2$ = 11.91

$y_N = y_3$ = 11.09

$$rms_y = \sqrt{\frac{10.60 + 11.91^2 + 11.09^2}{3}}$$

$rms_y$ = 11.21

(e) *Accuracy.* Calculate an accuracy, as follows, noting that the are arithmetic means, each determined by repeatedly measuring one sample of a single reference quantity, $y_{ref}$:

$$\text{accuracy} = |y_{ref} - \bar{y}| \qquad \text{Eq. 1065.602-4}$$

*Example:*

$y_{ref}$ = 1800.0

N = 10

$$\bar{y} = \frac{\sum_{i=1}^{10} \bar{y}_i}{10} = 1802.5$$

accuracy = | 1800.0 − 1802.5 |

accuracy = 2.5

(f) *t-test.* Determine if your data passes a t-test by using the following equations and tables:

(1) For an unpaired t-test, calculate the t statistic and its number of degrees of freedom, v, as follows:

$$t = \frac{|\bar{y}_{ref} - \bar{y}|}{\sqrt{\frac{\sigma_{ref}^2}{N_{ref}} + \frac{\sigma_y^2}{N}}} \qquad \text{Eq. 1065.602-5}$$

$$v = \frac{\left(\frac{\sigma_{ref}^2}{N_{ref}} + \frac{\sigma_y^2}{N}\right)^2}{\frac{\left(\sigma_{ref}^2/N_{ref}\right)^2}{N_{ref}-1} + \frac{\left(\sigma_y^2/N\right)^2}{N-1}} \qquad \text{Eq. 1065.602-6}$$

*Example:*

$\bar{y}_{ref} = 1205.3$
$\bar{y} = 1123.8$
$\sigma_{ref} = 9.399$
$\sigma_y = 10.583$
$N_{ref} = 11$
$N = 7$

$$t = \frac{|1205.3 - 1123.8|}{\sqrt{\frac{9.399^2}{11} + \frac{10.583^2}{7}}}$$

$t = 16.63$
$\sigma_{ref} = 9.399$
$\sigma_y = 10.583$
$N_{ref} = 11$
$N = 7$

$$v = \frac{\left(\frac{9.399^2}{11} + \frac{10.583^2}{7}\right)^2}{\frac{\left(9.399^2/11\right)^2}{11-1} + \frac{\left(10.583^2/7\right)^2}{7-1}}$$

$v = 11.76$

(2) For a paired t-test, calculate the t statistic and its number of degrees of freedom, v, as follows, noting that the $\varepsilon_i$ are the errors (*e.g.*, differences) between each pair of $y_{refi}$ and $y_i$:

$$t = \frac{|\bar{\varepsilon}| \cdot \sqrt{N}}{\sigma_\varepsilon} \qquad \text{Eq. 1065.602-7}$$

*Example:*

$\bar{\varepsilon} = -0.12580$
$N = 16$
$\sigma_\varepsilon = 0.04837$

$$t = \frac{|-0.12580| \cdot \sqrt{16}}{0.04837}$$

$t = 10.403$
$v = N - 1$

*Example:*

$N = 16$
$v = 16 - 1$
$v = 15$

(3) Use Table 1 of this section to compare t to the $t_{crit}$ values tabulated versus the number of degrees of freedom. If t is less than $t_{crit}$, then t passes the t-test.

TABLE 1 OF § 1065.602.—CRITICAL T VALUES VERSUS NUMBER OF DEGREES OF FREEDOM, ν [1]

| ν | Confidence | |
|---|---|---|
| | 90% | 95% |
| 1 | 6.314 | 12.706 |
| 2 | 2.920 | 4.303 |
| 3 | 2.353 | 3.182 |
| 4 | 2.132 | 2.776 |
| 5 | 2.015 | 2.571 |
| 6 | 1.943 | 2.447 |
| 7 | 1.895 | 2.365 |

TABLE 1 OF § 1065.602.—CRITICAL T VALUES VERSUS NUMBER OF DEGREES OF FREEDOM, ν [1]—Continued

| ν | Confidence | |
|---|---|---|
| | 90% | 95% |
| 8 | 1.860 | 2.306 |
| 9 | 1.833 | 2.262 |
| 10 | 1.812 | 2.228 |
| 11 | 1.796 | 2.201 |
| 12 | 1.782 | 2.179 |
| 13 | 1.771 | 2.160 |
| 14 | 1.761 | 2.145 |
| 15 | 1.753 | 2.131 |
| 16 | 1.746 | 2.120 |
| 18 | 1.734 | 2.101 |
| 20 | 1.725 | 2.086 |
| 22 | 1.717 | 2.074 |
| 24 | 1.711 | 2.064 |
| 26 | 1.706 | 2.056 |
| 28 | 1.701 | 2.048 |
| 30 | 1.697 | 2.042 |
| 35 | 1.690 | 2.030 |
| 40 | 1.684 | 2.021 |
| 50 | 1.676 | 2.009 |
| 70 | 1.667 | 1.994 |
| 100 | 1.660 | 1.984 |
| 1000+ | 1.645 | 1.960 |

[1] Use linear interpolation to establish values not shown here.

(g) *F-test.* Calculate the F statistic as follows:

$$F_y = \frac{\sigma_y^2}{\sigma_{ref}^2} \qquad \text{Eq. 1065.602-8}$$

*Example:*

$$\sigma_y = \sqrt{\frac{\sum_{i=1}^{N}\left(y_i - \bar{y}\right)^2}{(N-1)}} = 10.583$$

$$\sigma_{ref} = \sqrt{\frac{\sum_{i=1}^{N_{ref}}\left(y_{refi} - \bar{y}_{ref}\right)^2}{\left(N_{ref}-1\right)}} = 9.399$$

$$F = \frac{10.583^2}{9.399^2}$$

F = 1.268

(1) For a 90% confidence F-test, use Table 2 of this section to compareF to the $F_{crit90}$ values tabulated versus $(N-1)$ and$(N_{ref}-1)$. If F is less than $F_{crit90}$, thenF passes the F-test at 90% confidence.

(2) For a 95% confidence F-test, use Table 3 of this section to compareF to the $F_{crit95}$ values tabulated versus $(N-1)$ and$(N_{ref}-1)$. If F is less than $F_{crit95}$, thenF passes the F-test at 95% confidence.

BILLING CODE 6560–50–P

Table 2 of §1065.602–Critical $F$ values, $F_{crit90}$, versus $N$-1 and $N_{ref}$-1 at 90 % confidence

| $N$-1 | 1 | 2 | 3 | 4 | 5 | 6 | 7 | 8 | 9 | 10 | 12 | 15 | 20 | 24 | 30 | 40 | 60 | 120 | 1000+ |
|---|---|---|---|---|---|---|---|---|---|---|---|---|---|---|---|---|---|---|---|
| $N_{ref}$-1 | | | | | | | | | | | | | | | | | | | |
| 1 | 39.86 | 49.50 | 53.59 | 55.83 | 57.24 | 58.20 | 58.90 | 59.43 | 59.85 | 60.19 | 60.70 | 61.22 | 61.74 | 62.00 | 62.26 | 62.52 | 62.79 | 63.06 | 63.32 |
| 2 | 8.526 | 9.000 | 9.162 | 9.243 | 9.293 | 9.326 | 9.349 | 9.367 | 9.381 | 9.392 | 9.408 | 9.425 | 9.441 | 9.450 | 9.458 | 9.466 | 9.475 | 9.483 | 9.491 |
| 3 | 5.538 | 5.462 | 5.391 | 5.343 | 5.309 | 5.285 | 5.266 | 5.252 | 5.240 | 5.230 | 5.216 | 5.200 | 5.184 | 5.176 | 5.168 | 5.160 | 5.151 | 5.143 | 5.134 |
| 4 | 4.545 | 4.325 | 4.191 | 4.107 | 4.051 | 4.010 | 3.979 | 3.955 | 3.936 | 3.920 | 3.896 | 3.870 | 3.844 | 3.831 | 3.817 | 3.804 | 3.790 | 3.775 | 3.761 |
| 5 | 4.060 | 3.780 | 3.619 | 3.520 | 3.453 | 3.405 | 3.368 | 3.339 | 3.316 | 3.297 | 3.268 | 3.238 | 3.207 | 3.191 | 3.174 | 3.157 | 3.140 | 3.123 | 3.105 |
| 6 | 3.776 | 3.463 | 3.289 | 3.181 | 3.108 | 3.055 | 3.014 | 2.983 | 2.958 | 2.937 | 2.905 | 2.871 | 2.836 | 2.818 | 2.800 | 2.781 | 2.762 | 2.742 | 2.722 |
| 7 | 3.589 | 3.257 | 3.074 | 2.961 | 2.883 | 2.827 | 2.785 | 2.752 | 2.725 | 2.703 | 2.668 | 2.632 | 2.595 | 2.575 | 2.555 | 2.535 | 2.514 | 2.493 | 2.471 |
| 8 | 3.458 | 3.113 | 2.924 | 2.806 | 2.726 | 2.668 | 2.624 | 2.589 | 2.561 | 2.538 | 2.502 | 2.464 | 2.425 | 2.404 | 2.383 | 2.361 | 2.339 | 2.316 | 2.293 |
| 9 | 3.360 | 3.006 | 2.813 | 2.693 | 2.611 | 2.551 | 2.505 | 2.469 | 2.440 | 2.416 | 2.379 | 2.340 | 2.298 | 2.277 | 2.255 | 2.232 | 2.208 | 2.184 | 2.159 |
| 10 | 3.285 | 2.924 | 2.728 | 2.605 | 2.522 | 2.461 | 2.414 | 2.377 | 2.347 | 2.323 | 2.284 | 2.244 | 2.201 | 2.178 | 2.155 | 2.132 | 2.107 | 2.082 | 2.055 |
| 11 | 3.225 | 2.860 | 2.660 | 2.536 | 2.451 | 2.389 | 2.342 | 2.304 | 2.274 | 2.248 | 2.209 | 2.167 | 2.123 | 2.100 | 2.076 | 2.052 | 2.026 | 2.000 | 1.972 |
| 12 | 3.177 | 2.807 | 2.606 | 2.480 | 2.394 | 2.331 | 2.283 | 2.245 | 2.214 | 2.188 | 2.147 | 2.105 | 2.060 | 2.036 | 2.011 | 1.986 | 1.960 | 1.932 | 1.904 |
| 13 | 3.136 | 2.763 | 2.560 | 2.434 | 2.347 | 2.283 | 2.234 | 2.195 | 2.164 | 2.138 | 2.097 | 2.053 | 2.007 | 1.983 | 1.958 | 1.931 | 1.904 | 1.876 | 1.846 |
| 14 | 3.102 | 2.726 | 2.522 | 2.395 | 2.307 | 2.243 | 2.193 | 2.154 | 2.122 | 2.095 | 2.054 | 2.010 | 1.962 | 1.938 | 1.912 | 1.885 | 1.857 | 1.828 | 1.797 |
| 15 | 3.073 | 2.695 | 2.490 | 2.361 | 2.273 | 2.208 | 2.158 | 2.119 | 2.086 | 2.059 | 2.017 | 1.972 | 1.924 | 1.899 | 1.873 | 1.845 | 1.817 | 1.787 | 1.755 |
| 16 | 3.048 | 2.668 | 2.462 | 2.333 | 2.244 | 2.178 | 2.128 | 2.088 | 2.055 | 2.028 | 1.985 | 1.940 | 1.891 | 1.866 | 1.839 | 1.811 | 1.782 | 1.751 | 1.718 |
| 17 | 3.026 | 2.645 | 2.437 | 2.308 | 2.218 | 2.152 | 2.102 | 2.061 | 2.028 | 2.001 | 1.958 | 1.912 | 1.862 | 1.836 | 1.809 | 1.781 | 1.751 | 1.719 | 1.686 |
| 18 | 3.007 | 2.624 | 2.416 | 2.286 | 2.196 | 2.130 | 2.079 | 2.038 | 2.005 | 1.977 | 1.933 | 1.887 | 1.837 | 1.810 | 1.783 | 1.754 | 1.723 | 1.691 | 1.657 |
| 19 | 2.990 | 2.606 | 2.397 | 2.266 | 2.176 | 2.109 | 2.058 | 2.017 | 1.984 | 1.956 | 1.912 | 1.865 | 1.814 | 1.787 | 1.759 | 1.730 | 1.699 | 1.666 | 1.631 |
| 20 | 2.975 | 2.589 | 2.380 | 2.249 | 2.158 | 2.091 | 2.040 | 1.999 | 1.965 | 1.937 | 1.892 | 1.845 | 1.794 | 1.767 | 1.738 | 1.708 | 1.677 | 1.643 | 1.607 |
| 21 | 2.961 | 2.575 | 2.365 | 2.233 | 2.142 | 2.075 | 2.023 | 1.982 | 1.948 | 1.920 | 1.875 | 1.827 | 1.776 | 1.748 | 1.719 | 1.689 | 1.657 | 1.623 | 1.586 |
| 20 | 2.949 | 2.561 | 2.351 | 2.219 | 2.128 | 2.061 | 2.008 | 1.967 | 1.933 | 1.904 | 1.859 | 1.811 | 1.759 | 1.731 | 1.702 | 1.671 | 1.639 | 1.604 | 1.567 |
| 23 | 2.937 | 2.549 | 2.339 | 2.207 | 2.115 | 2.047 | 1.995 | 1.953 | 1.919 | 1.890 | 1.845 | 1.796 | 1.744 | 1.716 | 1.686 | 1.655 | 1.622 | 1.587 | 1.549 |
| 24 | 2.927 | 2.538 | 2.327 | 2.195 | 2.103 | 2.035 | 1.983 | 1.941 | 1.906 | 1.877 | 1.832 | 1.783 | 1.730 | 1.702 | 1.672 | 1.641 | 1.607 | 1.571 | 1.533 |
| 25 | 2.918 | 2.528 | 2.317 | 2.184 | 2.092 | 2.024 | 1.971 | 1.929 | 1.895 | 1.866 | 1.820 | 1.771 | 1.718 | 1.689 | 1.659 | 1.627 | 1.593 | 1.557 | 1.518 |
| 26 | 2.909 | 2.519 | 2.307 | 2.174 | 2.082 | 2.014 | 1.961 | 1.919 | 1.884 | 1.855 | 1.809 | 1.760 | 1.706 | 1.677 | 1.647 | 1.615 | 1.581 | 1.544 | 1.504 |
| 27 | 2.901 | 2.511 | 2.299 | 2.165 | 2.073 | 2.005 | 1.952 | 1.909 | 1.874 | 1.845 | 1.799 | 1.749 | 1.695 | 1.666 | 1.636 | 1.603 | 1.569 | 1.531 | 1.491 |
| 28 | 2.894 | 2.503 | 2.291 | 2.157 | 2.064 | 1.996 | 1.943 | 1.900 | 1.865 | 1.836 | 1.790 | 1.740 | 1.685 | 1.656 | 1.625 | 1.593 | 1.558 | 1.520 | 1.478 |
| 29 | 2.887 | 2.495 | 2.283 | 2.149 | 2.057 | 1.988 | 1.935 | 1.892 | 1.857 | 1.827 | 1.781 | 1.731 | 1.676 | 1.647 | 1.616 | 1.583 | 1.547 | 1.509 | 1.467 |
| 30 | 2.881 | 2.489 | 2.276 | 2.142 | 2.049 | 1.980 | 1.927 | 1.884 | 1.849 | 1.819 | 1.773 | 1.722 | 1.667 | 1.638 | 1.606 | 1.573 | 1.538 | 1.499 | 1.456 |
| 40 | 2.835 | 2.440 | 2.226 | 2.091 | 1.997 | 1.927 | 1.873 | 1.829 | 1.793 | 1.763 | 1.715 | 1.662 | 1.605 | 1.574 | 1.541 | 1.506 | 1.467 | 1.425 | 1.377 |
| 60 | 2.791 | 2.393 | 2.177 | 2.041 | 1.946 | 1.875 | 1.819 | 1.775 | 1.738 | 1.707 | 1.657 | 1.603 | 1.543 | 1.511 | 1.476 | 1.437 | 1.395 | 1.348 | 1.291 |
| 120 | 2.748 | 2.347 | 2.130 | 1.992 | 1.896 | 1.824 | 1.767 | 1.722 | 1.684 | 1.652 | 1.601 | 1.545 | 1.482 | 1.447 | 1.409 | 1.368 | 1.320 | 1.265 | 1.193 |
| 1000+ | 2.706 | 2.303 | 2.084 | 1.945 | 1.847 | 1.774 | 1.717 | 1.670 | 1.632 | 1.599 | 1.546 | 1.487 | 1.421 | 1.383 | 1.342 | 1.295 | 1.240 | 1.169 | 1.000 |

Table 3 of §1065.602–Critical $F$ values, $F_{crit95}$, versus $N$-1 and $N_{ref}$-1 at 95 % confidence

| $N$-1 | 1 | 2 | 3 | 4 | 5 | 6 | 7 | 8 | 9 | 10 | 12 | 15 | 20 | 24 | 30 | 40 | 60 | 120 | 1000+ |
|---|---|---|---|---|---|---|---|---|---|---|---|---|---|---|---|---|---|---|---|
| $N_{ref}$-1 | | | | | | | | | | | | | | | | | | | |
| 1 | 161.4 | 199.5 | 215.7 | 224.5 | 230.1 | 233.9 | 236.7 | 238.8 | 240.5 | 241.8 | 243.9 | 245.9 | 248.0 | 249.0 | 250.1 | 251.1 | 252.2 | 253.2 | 254.3 |
| 2 | 18.51 | 19.00 | 19.16 | 19.24 | 19.29 | 19.33 | 19.35 | 19.37 | 19.38 | 19.39 | 19.41 | 19.42 | 19.44 | 19.45 | 19.46 | 19.47 | 19.47 | 19.48 | 19.49 |
| 3 | 10.12 | 9.552 | 9.277 | 9.117 | 9.014 | 8.941 | 8.887 | 8.845 | 8.812 | 8.786 | 8.745 | 8.703 | 8.660 | 8.639 | 8.617 | 8.594 | 8.572 | 8.549 | 8.526 |
| 4 | 7.709 | 6.944 | 6.591 | 6.388 | 6.256 | 6.163 | 6.094 | 6.041 | 5.999 | 5.964 | 5.912 | 5.858 | 5.803 | 5.774 | 5.746 | 5.717 | 5.688 | 5.658 | 5.628 |
| 5 | 6.608 | 5.786 | 5.410 | 5.192 | 5.050 | 4.950 | 4.876 | 4.818 | 4.773 | 4.735 | 4.678 | 4.619 | 4.558 | 4.527 | 4.496 | 4.464 | 4.431 | 4.399 | 4.365 |
| 6 | 5.987 | 5.143 | 4.757 | 4.534 | 4.387 | 4.284 | 4.207 | 4.147 | 4.099 | 4.060 | 4.000 | 3.938 | 3.874 | 3.842 | 3.808 | 3.774 | 3.740 | 3.705 | 3.669 |
| 7 | 5.591 | 4.737 | 4.347 | 4.120 | 3.972 | 3.866 | 3.787 | 3.726 | 3.677 | 3.637 | 3.575 | 3.511 | 3.445 | 3.411 | 3.376 | 3.340 | 3.304 | 3.267 | 3.230 |
| 8 | 5.318 | 4.459 | 4.066 | 3.838 | 3.688 | 3.581 | 3.501 | 3.438 | 3.388 | 3.347 | 3.284 | 3.218 | 3.150 | 3.115 | 3.079 | 3.043 | 3.005 | 2.967 | 2.928 |
| 9 | 5.117 | 4.257 | 3.863 | 3.633 | 3.482 | 3.374 | 3.293 | 3.230 | 3.179 | 3.137 | 3.073 | 3.006 | 2.937 | 2.901 | 2.864 | 2.826 | 2.787 | 2.748 | 2.707 |
| 10 | 4.965 | 4.103 | 3.708 | 3.478 | 3.326 | 3.217 | 3.136 | 3.072 | 3.020 | 2.978 | 2.913 | 2.845 | 2.774 | 2.737 | 2.700 | 2.661 | 2.621 | 2.580 | 2.538 |
| 11 | 4.844 | 3.982 | 3.587 | 3.357 | 3.204 | 3.095 | 3.012 | 2.948 | 2.896 | 2.854 | 2.788 | 2.719 | 2.646 | 2.609 | 2.571 | 2.531 | 2.490 | 2.448 | 2.405 |
| 12 | 4.747 | 3.885 | 3.490 | 3.259 | 3.106 | 2.996 | 2.913 | 2.849 | 2.796 | 2.753 | 2.687 | 2.617 | 2.544 | 2.506 | 2.466 | 2.426 | 2.384 | 2.341 | 2.296 |
| 13 | 4.667 | 3.806 | 3.411 | 3.179 | 3.025 | 2.915 | 2.832 | 2.767 | 2.714 | 2.671 | 2.604 | 2.533 | 2.459 | 2.420 | 2.380 | 2.339 | 2.297 | 2.252 | 2.206 |
| 14 | 4.600 | 3.739 | 3.344 | 3.112 | 2.958 | 2.848 | 2.764 | 2.699 | 2.646 | 2.602 | 2.534 | 2.463 | 2.388 | 2.349 | 2.308 | 2.266 | 2.223 | 2.178 | 2.131 |
| 15 | 4.543 | 3.682 | 3.287 | 3.056 | 2.901 | 2.791 | 2.707 | 2.641 | 2.588 | 2.544 | 2.475 | 2.403 | 2.328 | 2.288 | 2.247 | 2.204 | 2.160 | 2.114 | 2.066 |
| 16 | 4.494 | 3.634 | 3.239 | 3.007 | 2.852 | 2.741 | 2.657 | 2.591 | 2.538 | 2.494 | 2.425 | 2.352 | 2.276 | 2.235 | 2.194 | 2.151 | 2.106 | 2.059 | 2.010 |
| 17 | 4.451 | 3.592 | 3.197 | 2.965 | 2.810 | 2.699 | 2.614 | 2.548 | 2.494 | 2.450 | 2.381 | 2.308 | 2.230 | 2.190 | 2.148 | 2.104 | 2.058 | 2.011 | 1.960 |
| 18 | 4.414 | 3.555 | 3.160 | 2.928 | 2.773 | 2.661 | 2.577 | 2.510 | 2.456 | 2.412 | 2.342 | 2.269 | 2.191 | 2.150 | 2.107 | 2.063 | 2.017 | 1.968 | 1.917 |
| 19 | 4.381 | 3.522 | 3.127 | 2.895 | 2.740 | 2.628 | 2.544 | 2.477 | 2.423 | 2.378 | 2.308 | 2.234 | 2.156 | 2.114 | 2.071 | 2.026 | 1.980 | 1.930 | 1.878 |
| 20 | 4.351 | 3.493 | 3.098 | 2.866 | 2.711 | 2.599 | 2.514 | 2.447 | 2.393 | 2.348 | 2.278 | 2.203 | 2.124 | 2.083 | 2.039 | 1.994 | 1.946 | 1.896 | 1.843 |
| 21 | 4.325 | 3.467 | 3.073 | 2.840 | 2.685 | 2.573 | 2.488 | 2.421 | 2.366 | 2.321 | 2.250 | 2.176 | 2.096 | 2.054 | 2.010 | 1.965 | 1.917 | 1.866 | 1.812 |
| 22 | 4.301 | 3.443 | 3.049 | 2.817 | 2.661 | 2.549 | 2.464 | 2.397 | 2.342 | 2.297 | 2.226 | 2.151 | 2.071 | 2.028 | 1.984 | 1.938 | 1.889 | 1.838 | 1.783 |
| 23 | 4.279 | 3.422 | 3.028 | 2.796 | 2.640 | 2.528 | 2.442 | 2.375 | 2.320 | 2.275 | 2.204 | 2.128 | 2.048 | 2.005 | 1.961 | 1.914 | 1.865 | 1.813 | 1.757 |
| 24 | 4.260 | 3.403 | 3.009 | 2.776 | 2.621 | 2.508 | 2.423 | 2.355 | 2.300 | 2.255 | 2.183 | 2.108 | 2.027 | 1.984 | 1.939 | 1.892 | 1.842 | 1.790 | 1.733 |
| 25 | 4.242 | 3.385 | 2.991 | 2.759 | 2.603 | 2.490 | 2.405 | 2.337 | 2.282 | 2.237 | 2.165 | 2.089 | 2.008 | 1.964 | 1.919 | 1.872 | 1.822 | 1.768 | 1.711 |
| 26 | 4.225 | 3.369 | 2.975 | 2.743 | 2.587 | 2.474 | 2.388 | 2.321 | 2.266 | 2.220 | 2.148 | 2.072 | 1.990 | 1.946 | 1.901 | 1.853 | 1.803 | 1.749 | 1.691 |
| 27 | 4.210 | 3.354 | 2.960 | 2.728 | 2.572 | 2.459 | 2.373 | 2.305 | 2.250 | 2.204 | 2.132 | 2.056 | 1.974 | 1.930 | 1.884 | 1.836 | 1.785 | 1.731 | 1.672 |
| 28 | 4.196 | 3.340 | 2.947 | 2.714 | 2.558 | 2.445 | 2.359 | 2.291 | 2.236 | 2.190 | 2.118 | 2.041 | 1.959 | 1.915 | 1.869 | 1.820 | 1.769 | 1.714 | 1.654 |
| 29 | 4.183 | 3.328 | 2.934 | 2.701 | 2.545 | 2.432 | 2.346 | 2.278 | 2.223 | 2.177 | 2.105 | 2.028 | 1.945 | 1.901 | 1.854 | 1.806 | 1.754 | 1.698 | 1.638 |
| 30 | 4.171 | 3.316 | 2.922 | 2.690 | 2.534 | 2.421 | 2.334 | 2.266 | 2.211 | 2.165 | 2.092 | 2.015 | 1.932 | 1.887 | 1.841 | 1.792 | 1.740 | 1.684 | 1.622 |
| 40 | 4.085 | 3.232 | 2.839 | 2.606 | 2.450 | 2.336 | 2.249 | 2.180 | 2.124 | 2.077 | 2.004 | 1.925 | 1.839 | 1.793 | 1.744 | 1.693 | 1.637 | 1.577 | 1.509 |
| 60 | 4.001 | 3.150 | 2.758 | 2.525 | 2.368 | 2.254 | 2.167 | 2.097 | 2.040 | 1.993 | 1.917 | 1.836 | 1.748 | 1.700 | 1.649 | 1.594 | 1.534 | 1.467 | 1.389 |
| 120 | 3.920 | 3.072 | 2.680 | 2.447 | 2.290 | 2.175 | 2.087 | 2.016 | 1.959 | 1.911 | 1.834 | 1.751 | 1.659 | 1.608 | 1.554 | 1.495 | 1.429 | 1.352 | 1.254 |
| 1000+ | 3.842 | 2.996 | 2.605 | 2.372 | 2.214 | 2.099 | 2.010 | 1.938 | 1.880 | 1.831 | 1.752 | 1.666 | 1.571 | 1.517 | 1.459 | 1.394 | 1.318 | 1.221 | 1.000 |

BILLING CODE 6560–50–C

(h) *Slope.* Calculate a least-squares regression slope, $a_{1y}$, as follows:

$$a_{1y} = \frac{\sum_{i=1}^{N}\left(y_i - \bar{y}\right)\cdot\left(y_{refi} - \bar{y}_{ref}\right)}{\sum_{i=1}^{N}\left(y_{refi} - \bar{y}_{ref}\right)^2} \qquad \text{Eq. 1065.602-9}$$

*Example:*
N = 6000
$y_1 = 2045.8$
$\bar{y} = 1051.1$
$y_{ref\ 1} = 2045.0$
$\bar{y}_{ref} = 1055.3$

$$a_{iy} = \frac{(2045.8 - 1050.1)\cdot(2045.0 - 1055.3) + \ldots + \left(y_{6000} - 1050.1\right)\cdot\left(y_{ref6000} - 1055.3\right)}{(2045.0 - 1055.3)^2 + \ldots + \left(y_{ref6000} - 1055.3\right)^2}$$

$a_{1y} = 1.0110$

(i) *Intercept.* Calculate a least-squares regression intercept, $a_{0y}$, as follows:

$$a_{0y} = \bar{y} - \left(a_{1y}\cdot\bar{y}_{ref}\right) \qquad \text{Eq. 1065.602-10}$$

*Example:*
$\bar{y} = 1050.1$
$a_{1y} = 1.0110$
$\bar{y}_{ref} = 1055.3$
$a_{0y} = 1050.1 - (1.0110 \cdot 1055.3)$
$a_{0y} = 16.8083$

(j) *Standard estimate of error.* Calculate a standard estimate of error, SEE, as follows:

$$SEE_y = \frac{\sqrt{\sum_{i=1}^{N}\left[y_i - a_{0y} - \left(a_{1y}\cdot y_{refi}\right)\right]^2}}{N-2} \qquad \text{Eq. 1065.602-11}$$

*Example:*
N = 6000
$y_1 = 2045.8$
$a_{0y} = -16.8083$
$a_{1y} = 1.0110$
$y_{ref1} = 2045.0$

$$SEE_y = \sqrt{\frac{\left[2045.8 - (-16.8083) - (1.0110\cdot 2045.0)\right]^2 + \ldots\left[y_{6000} - (-16.8083) - \left(1.0110\cdot y_{ref\,6000}\right)\right]^2}{6000-2}}$$

$SEE_y = 5.348$

(k) *Coefficient of determination.* Calculate a coefficient of determination, $r^2$, as follows:

$$r_y^2 = 1 - \frac{\sum_{i=1}^{N}\left[y_i - a_{0y} - \left(a_{1y}\cdot y_{refi}\right)\right]^2}{\sum_{i=1}^{N}\left[y_i - \bar{y}\right]^2} \qquad \text{Eq. 1065.602-12}$$

*Example:*
N = 6000
$y_1 = 2045.8$
$a_{0y} = 16.8083$
$a_{1y} = 1.0110$
$y_{ref1} = 2045.0$
$\bar{y} = 1480.5$

$$r_y^2 = 1 - \frac{\left[2045.8 - (-16.8083) - (1.0110 \times 2045.0)\right]^2 + K\ \left[y_{6000} - (-16.8083) - \left(1.0110 \cdot y_{ref6000}\right)\right]^2}{\left[2045.8 - 1480.5\right]^2 + K\ \left[y_{6000} - 1480.5\right]^2}$$

$$r_y^2 = 0.9859$$

(l) *Flow-weighted mean concentration.* In some sections of this part, you may need to calculate a flow-weighted mean concentration to determine the applicability of certain provisions. A flow-weighted mean is the mean of a quantity after it is weighted proportional to a corresponding flow rate. For example, if a gas concentration is measured continuously from the raw exhaust of an engine, its flow-weighted mean concentration is the sum of the products of each recorded concentration times its respective exhaust molar flow rate, divided by the sum of the recorded flow rate values. As another example, the bag concentration from a CVS system is the same as the flow-weighted mean concentration because the CVS system itself flow-weights the bag concentration. You might already expect a certain flow-weighted mean concentration of an emission at its standard based on previous testing with similar engines or testing with similar equipment and instruments. If you need to estimate your expected flow-weighted mean concentration of an emission at its standard, we recommend using the following examples as a guide for how to estimate the flow-weighted mean concentration expected at the standard. Note that these examples are not exact and that they contain assumptions that are not always valid. Use good engineering judgement to determine if you can use similar assumptions.

(1) To estimate the flow-weighted mean raw exhaust $NO_X$ concentration from a turbocharged heavy-duty compression-ignition engine at a $NO_X$ standard of 2.5 g/(kW·hr), you may do the following:

(i) Based on your engine design, approximate a map of maximum torque versus speed and use it with the applicable normalized duty cycle in the standard-setting part to generate a reference duty cycle as described in § 1065.610. Calculate the total reference work, $W_{ref}$, as described in § 1065.650. Divide the reference work by the duty cycle's time interval, $\Delta t_{dutycycle}$, to determine mean reference power, $\bar{P}_{ref}$.

(ii) Based on your engine design, estimate maximum power, $P_{max}$, the design speed at maximum power, $f_{nmax}$, the design maximum intake manifold boost pressure, $p_{inmax}$, and temperature, $T_{inmax}$. Also, estimate an mean fraction of power that is lost due to friction and pumping, $\bar{P}_{frict}$. Use this information along with the engine displacement volume, $V_{disp}$, an approximate volumetric efficiency, $\eta_V$, and the number of engine strokes per power stroke (2-stroke or 4-stroke), $N_{stroke}$ to estimate the maximum raw exhaust molar flow rate, $\dot{n}_{exhmax}$.

(iii) Use your estimated values as described in the following example calculation:

$$\bar{x}_{exp} = \frac{e_{std} \cdot W_{ref}}{M \cdot \dot{n}_{exhmax} \cdot \Delta t_{duty\ cycle} \cdot \left(\frac{\bar{P}_{ref} + \left(\bar{P}_{frict} \cdot P_{max}\right)}{P_{max}}\right)} \qquad \text{Eq. 1065.602-13}$$

$$\dot{n}_{exhmax} = \frac{p_{max} \cdot V_{disp} \cdot f_{nmax} \cdot \frac{2}{N_{stroke}} \cdot \eta_v}{R \cdot T_{max}} \qquad \text{Eq. 1065.602-14}$$

*Example:*

$e_{NOX}$ = 2.5 g/(kW · hr)
$W_{ref}$ = 11.883 kW · hr
$M_{NOx}$ = 46.0055 g/mol = 46.0055 · $10^{-6}$ g/μmol
$\Delta t_{dutycycle}$ = 20 min = 1200 s
$\bar{P}_{ref}$ = 35.65 kW
$\bar{P}_{frict}$ = 15%
$P_{max}$ = 125 kW
$p_{max}$ = 300 kPa = 300000 Pa
$V_{disp}$ = 3.011 = 0.0030 $m^3$
$f_{nmax}$ = 2800 rev/min = 46.67 rev/s
$N_{stroke}$ = 4 1/rev
$\eta_V$ = 0.9
R = 8.314472 J/(mol·K)
$T_{max}$ = 348.15 K

$$\dot{n}_{exhmax} = \frac{300 \cdot 3.0 \cdot 47.67 \cdot \frac{2}{4} \cdot 0.9}{8.314472 \cdot 348.15}$$

$\dot{n}_{exhmax}$ = 6.53 mol/s

$$\bar{x}_{exp} = \frac{2.5 \cdot 11.883}{46.0055 \cdot 10^{-6} \cdot 6.53 \cdot 1200 \cdot \left(\frac{35.65 + (0.15 \cdot 125)}{125}\right)}$$

$\bar{X}_{exp}$ = 189.4 μmol/mol

(2) To estimate the flow-weighted mean NMHC concentration in a CVS from a naturally aspirated nonroad spark-ignition engine at an NMHC standard of 0.5 g/(kW·hr), you may do the following:

(i) Based on your engine design, approximate a map of maximum torque versus speed and use it with the applicable normalized duty cycle in the standard-setting part to generate a reference duty cycle as described in § 1065.610. Calculate the total reference work, $W_{ref}$, as described in § 1065.650.

(ii) Multiply your CVS total molar flow rate by the time interval of the duty cycle, $\Delta t_{dutycycle}$. The result is the total diluted exhaust flow of the $n_{dexh}$.

(iii) Use your estimated values as described in the following example calculation:

$$\bar{x}_{NMHC} = \frac{e_{std} \cdot W_{ref}}{M \cdot \dot{n}_{dexh} \cdot \Delta t_{duty\ cycle}} \qquad \text{Eq. 1065.602-15}$$

*Example:*

$e_{NMHC}$ = 1.5 g/(kW·hr)

$W_{ref}$ = 5.389 kW·hr

$M_{NMHC}$ = 13.875389 g/mol = 13.875389 · $10^{-6}$ g/μmol

$\dot{n}_{dexh}$ = 6.021 mol/s

$\Delta t_{dutycycle}$ = 30 min = 1800 s

$$\bar{x}_{NMHC} = \frac{1.5 \cdot 5.389}{13.875389 \cdot 10^{-6} \cdot 6.021 \cdot 1800}$$

$\bar{X}_{NMHC}$ = 53.8 μmol/mol

**§ 1065.610 Duty cycle generation.**

This section describes how to generate duty cycles that are specific to your engine, based on the normalized duty cycles in the standard-setting part. During an emission test, use a duty cycle that is specific to your engine to command engine speed, torque, and power, as applicable, using an engine dynamometer and an engine operator demand. Paragraph (a) of this section describes how to ''normalize'' your engine's map to determine the maximum test speed and torque for your engine. The rest of this section describes how to use these values to ''denormalize'' the duty cycles in the standard-setting parts, which are all published on a normalized basis. Thus, the term ''normalized'' in paragraph (a) of this section refers to different values than it does in the rest of the section.

(a) *Maximum test speed, $f_{ntest}$.* This section generally applies to duty cycles for variable-speed engines. For constant-speed engines subject to duty cycles that specify normalized speed commands, use the no-load governed speed as the measured $f_{ntest}$. This is the highest engine speed where an engine outputs zero torque. For variable-speed engines, determine the measured $f_{ntest}$ from the power-versus-speed map, generated according to § 1065.510, as follows:

(1) Based on the map, determine maximum power, $P_{max}$, and the speed at which maximum power occurred, $f_{nPmax}$. Divide every recorded power by $P_{max}$ and divide every recorded speed by $f_{nPmax}$. The result is a normalized power-versus-speed map. Your measured $f_{ntest}$ is the speed at which the sum of the squares of normalized speed and power is maximum, as follows:

$$f_{ntest} = f_{ni} \text{ at the maximum of } \left(f_{nnormi}^{2} + P_{normi}^{2}\right) \qquad \text{Eq. 1065.610-1}$$

Where:

$f_{ntest}$ = maximum test speed.

i = an indexing variable that represents one recorded value of an engine map.

$f_{nnormi}$ = an engine speed normalized by dividing it by $f_{nPmax}$.

$P_{normi}$ = an engine power normalized by dividing it by $P_{max}$.

*Example:*

($f_{nnorm1}$ = 1.002, $P_{norm1}$ = 0.978, $f_{n1}$ = 2359.71)

($f_{nnorm2}$ = 1.004, $P_{norm2}$ = 0.977, $fn_2$ = 2364.42)

($f_{nnorm3}$ = 1.006, $P_{norm3}$ = 0.974, $f_{n3}$ = 2369.13)

($f_{nnorm1}^2 + P_{norm1}^2$) = ($1.002^2 + 0.978^2$) = 1.960

($f_{nnorm1}^2 + P_{norm1}^2$) = ($1.004^2 + 0.977^2$) = 1.963

($f_{nnorm1}^2 + P_{norm1}^2$) = ($1.006^2 + 0.974^2$) = 1.961 maximum = 1.963 at i = 2

$f_{ntest}$ = 2364.42 rev/min

(2) For variable-speed engines, transform normalized speeds to reference speeds according to paragraph (c) of this section by using the measured maximum test speed determined according to paragraph (a)(1) of this section—or use your declared maximum test speed, as allowed in § 1065.510.

(3) For constant-speed engines, transform normalized speeds to reference speeds according to paragraph (c) of this section by using the measured no-load governed—speed or use your declared maximum test speed, as allowed in § 1065.510.

(b) *Maximum test torque, $T_{test}$.* For constant-speed engines, determine the measured $T_{test}$ from the power-versus-speed map, generated according to § 1065.510, as follows:

(1) Based on the map, determine maximum power, $P_{max}$, and the speed at which maximum power occurs, $F_{nPmax}$. Divide every recorded power by $P_{max}$ and divide every recorded speed by $F_{nPmax}$. The result is a normalized power-versus-speed map. Your measured $T_{test}$ is the speed at which the sum of the squares of normalized speed and power is maximum, as follows:

$$T_{test} = T_i \text{ at the maximum of } \left(f_{nnormi}^{2} + P_{normi}^{2}\right) \qquad \text{Eq. 1065.610-2}$$

Where:

$T_{test}$ = maximum test torque.

*Example:*

($f_{nnorm1}$ = 1.002, $P_{norm1}$ = 0.978, $T_1$ = 722.62 N·m)

($f_{nnorm2}$ = 1.004, $P_{norm2}$ = 0.977, $T_2$ = 720.44 N·m)

($f_{nnorm3}$ = 1.006, $P_{norm3}$ = 0.974, $T_3$ = 716.80 N·m)

($f_{nnorm1}^2 + P_{norm1}^2$) = ($1.002_2 + 0.978_2$) = 1.960

($f_{nnorm1}^2 + P_{norm1}^2$) = ($1.004^2 + 0.977^2$) = 1.963

($f_{nnorm1}^2 + P_{norm1}^2$) = ($1.006^2 + 0.974^2$) = 1.961 maximum = 1.963 at i = 2

$T_{test}$ = 720.44 N·m

(2) Transform normalized torques to reference torques according to paragraph (d) of this section by using the measured maximum test torque determined according to paragraph (b)(1) of this section—or use your declared maximum test torque, as allowed in § 1065.510.

(c) *Generating reference speed values from normalized duty cycle speeds.* Transform normalized speed values to reference values as follows:

(1) *% speed.* If your normalized duty cycle specifies % speed values, use your declared warm idle speed and your maximum test speed to transform the duty cycle, as follows:

$$f_{nref} = \%\ speed \cdot (f_{ntest} - f_{nidle}) + f_{nidle} \qquad \text{Eq. 1065.610-3}$$

*Example:*

% speed = 85 %
$f_{ntest}$ = 2364 rev/min
$f_{nidle}$ = 650 rev/min
$f_{nref}$ = 85 % · (2364 650 ) + 650
$f_{nref}$ = 2107 rev/min

(2) *A, B, and C speeds.* If your normalized duty cycle specifies speeds as A, B, or C values, use your power-versus-speed curve to determine the lowest speed below maximum power at which 50 % of maximum power occurs. Denote this value as $n_{lo}$. Also determine the highest speed above maximum power at which 70 % of maximum power occurs. Denote this value as $n_{hi}$ Use $n_{hi}$ and $n_{lo}$ to calculate reference values for A, B, or C speeds as follows:

$$f_{nrefA} = 0.25 \cdot (n_{hi} - n_{lo}) + n_{lo} \qquad \text{Eq. 1065.610-4}$$

$$f_{nrefB} = 0.50 \cdot (n_{hi} - n_{lo}) + n_{lo} \qquad \text{Eq. 1065.610-5}$$

$$f_{nrefC} = 0.75 \cdot (n_{hi} - n_{lo}) + n_{lo} \qquad \text{Eq. 1065.610-6}$$

*Example:*

$n_{lo}$ = 1005 rev/min
$n_{hi}$ = 2385 rev/min
$f_{nrefA}$ = 0.25 · (2385 1005) + 1005
$f_{nrefB}$ = 0.50 · (2385 1005) + 1005
$f_{nrefC}$ = 0.75 · (2385 1005) + 1005
$f_{nrefA}$ = 1350 rev/min
$f_{nrefB}$ = 1695 rev/min
$f_{nrefC}$ = 2040 rev/min

(3) *Intermediate speed.* If your normalized duty cycle specifies a speed as ''intermediate speed,'' use your torque-versus-speed curve to determine the speed at which maximum torque occurs. This is peak torque speed. Identify your reference intermediate speed as one of the following values:

(i) Peak torque speed if it is between (60 and 75) % of maximum test speed.

(ii) 60% of maximum test speed if peak torque speed is less than 60% of maximum test speed.

(iii) 75% of maximum test speed if peak torque speed is greater than 75% of maximum test speed.

(d) *Generating reference torques from normalized duty-cycle torques.* Transform normalized torques to reference torques using your map of maximum torque versus speed.

(1) *Reference torque for variable-speed engines.* For a given speed point, multiply the corresponding % torque by the maximum torque at that speed, according to your map. Linearly interpolate mapped torque values to determine torque between mapped speeds. The result is the reference torque for each speed point.

(2) *Reference torque for constant-speed engines.* Multiply a % torque value by your maximum test torque. The result is the reference torque for each point. Note that if your constant-speed engine is subject to duty cycles that specify normalized speed commands, use the provisions of paragraph (d)(1) of this section to transform your normalized torque values.

(3) *Permissible deviations for any engine.* If your engine does not operate below a certain minimum torque under normal in-use conditions, you may use a declared minimum torque as the reference value instead of any value denormalized to be less than the declared value. For example, if your engine is connected to an automatic transmission, it may have a minimum torque called curb idle transmission torque (CITT). In this case, at idle conditions (*i.e.*, 0% speed, 0% torque), you may useCITT as a reference value instead of 0 N·m.

(e) *Generating reference power values from normalized duty cycle powers.* Transform normalized power values to reference speed and power values using your map of maximum power versus speed.

(1) First transform normalized speed values into reference speed values. For a given speed point, multiply the corresponding % power by the maximum test power defined in the standard-setting part. The result is the reference power for each speed point. You may calculate a corresponding reference torque for each point and command that reference torque instead of a reference power.

(2) If your engine does not operate below a certain power under normal in-use conditions, you may use a declared minimum power as the reference value instead of any value denormalized to be less than the declared value. For example, if your engine is directly connected to a propeller, it may have a minimum power called idle power. In this case, at idle conditions (*i.e.*, 0% speed, 0% power), you may use a corresponding idle power as a reference power instead of 0 kW.

### § 1065.630 1980 international gravity formula.

The acceleration of Earth's gravity, $a_g$, varies depending on your location. Calculate $a_g$ at your latitude, as follows:

$$a_g = 9.7803267715 \cdot [1 + s$$
$$5.2790414 \cdot 10^{-3} \cdot \sin^2(\theta) +$$
$$2.32718 \cdot 10^{-5} \cdot \sin^4(\theta) +$$
$$1.262 \cdot 10^{-7} \cdot \sin^6(\theta) +$$
$$7 \cdot 10^{-10} \cdot \sin^8(\theta)] \qquad \text{Eq. 1065.630-1}$$

Where:

θ = Degrees north or south latitude.

*Example:*

θ = 45°
$a_g$ = 9.7803267715 · (1+
5.2790414 · $10^{-3}$ · $\sin^2$ (45) +
2.32718 · $10^{-5}$ ·$\sin^4$ (45) +
1.262 · $10^{-7}$ ·$\sin^6$ (45) +
7 · $10^{-10}$ ·$\sin^8$ (45)
$a_g$ = 9.8178291229 m/s$^2$

### § 1065.640 Flow meter calibration calculations.

This section describes the calculations for calibrating various flow meters. After you calibrate a flow meter using these calculations, use the calculations described in § 1065.642 to calculate flow during an emission test. Paragraph (a) of this section first describes how to convert reference flow meter outputs for use in the calibration equations, which are presented on a molar basis. The remaining paragraphs describe the calibration calculations that are specific to certain types of flow meters.

(a) *Reference meter conversions.* The calibration equations in this section use molar flow rate, $\dot{n}_{ref}$, as a reference quantity. If your reference meter outputs a flow rate in a different quantity, such as standard volume rate, $\dot{V}_{stdref}$, actual volume rate, $\dot{V}_{actref}$, or mass rate, $\dot{m}_{ref}$, convert your reference meter output to a molar flow rate using the following equations, noting that while values for volume rate, mass rate, pressure, temperature, and molar mass may change during an emission test, you should ensure that they are as constant as practical for each individual set point during a flow meter calibration:

$$\dot{n}_{ref} = \frac{\dot{V}_{stdref} \cdot P_{std}}{T_{std} \cdot R} = \frac{V_{actref} \cdot P_{act}}{T_{act} \cdot R} = \frac{\dot{m}_{ref}}{M_{mix}} \qquad \text{Eq.1065.640-1}$$

Where:

$\dot{n}_{ref}$ = reference molar flow rate.
$\dot{V}_{stdref}$ = reference volume flow rate, corrected to a standard pressure and a standard temperature.
$\dot{V}_{actref}$ = reference volume flow rate at the actual pressure and temperature of the flow rate.
$\dot{m}_{ref}$ = reference mass flow.
$P_{std}$ = standard pressure.
$P_{act}$ = actual pressure of the flow rate.
$T_{std}$ = standard temperature.
$T_{act}$ = actual temperature of the flow rate.
R = molar gas constant.
$M_{mix}$ = molar mass of the flow rate.

*Example 1:*

$\dot{V}_{stdref}$ = 1000.00 ft³/min = 0.471948 m/s
P = 29.9213 in Hg @ 32 °F = 101325 Pa
T = 68.0 °F = 293.15 K
R = 8.314472 J/(mol·K)

$$\dot{n}_{ref} = \frac{0.471948 \cdot 101325}{293.15 \cdot 8.314472}$$

$\dot{n}_{ref}$ = 19.169 mol/s

*Example 2:*

$\dot{m}_{ref}$ = 17.2683 kg/min = 287.805 g/s
$M_{mix}$ = 28.7805 g/mol

$$\dot{n}_{ref} = \frac{287.05}{28.7805}$$

$\dot{n}_{ref}$ =10.0000 mol/s

(b) *PDP calibration calculations.* For each restrictor position, calculate the following values from the mean values determined in § 1065.340, as follows:

(1) PDP volume pumped per revolution, $V_{rev}$ (m³/rev):

$$v_{rev} = \frac{\bar{\dot{n}}_{ref} \cdot R \cdot \bar{T}_{in}}{\bar{P}_{in} \cdot \bar{f}_{nPDP}} \qquad \text{Eq. 1065.640-2}$$

*Example:*

$\dot{n}_{ref}$ = 25.096 mol/s
R = 8.314472 J/(mol·K)
$\bar{T}_{in}$ = 299.5 K
$\bar{P}_{in}$ = 98290 Pa
$\bar{f}_{nPDP}$ = 1205.1 rev/min = 20.085 rev/s

$$V_{rev} = \frac{25.096 \cdot 8.314472 \cdot 299.5}{98290 \cdot 20.085}$$

$V_{rev}$ = 0.03166 m³/rev

(2) PDP slip correction factor, $K_s$ (s/rev):

$$K_s = \frac{1}{\bar{f}_{rPDP}} \cdot \sqrt{\frac{\bar{P}_{out} - \bar{P}_{in}}{\bar{P}_{out}}} \qquad \text{Eq. 1065.640-3}$$

*Example:*

$\bar{f}_{nPDP}$ = 1205.1 rev/min = 20.085 rev/s
$\bar{P}_{out}$ = 100.103 kPa
$\bar{P}_{in}$= 98.290 kPa

$$K_s = \frac{1}{20.085} \cdot \sqrt{\frac{100.103 - 98.290}{100.103}}$$

$K_s$ = 0.006700 s/rev

(3) Perform a least-squares regression of PDP volume pumped per revolution, $V_{rev}$, versus PDP slip correction factor, $K_s$, by calculating slope, $a_1$, and intercept, $a_0$, as described in § 1065.602.

(4) Repeat the procedure in paragraphs (b)(1) through (3) of this section for every speed that you run your PDP.

(5) The following example illustrates these calculations:

TABLE 1 OF § 1065.640.—EXAMPLE OF PDP CALIBRATION DATA

| $\bar{f}_{nPDP}$ | $a_1$ | $a_0$ |
|---|---|---|
| 755.0 ..... | 50.43 | 0.056 |
| 987.6 ..... | 49.86 | −0.013 |
| 1254.5 .... | 48.54 | 0.028 |
| 1401.3 .... | 47.30 | −0.061 |

(6) For each speed at which you operate the PDP, use the corresponding slope, $a_1$, andintercept, $a_o$, to calculate flow rate during emission testing as described in § 1065.642.

(c) *Venturi governing equations and permissible assumptions.* This section describes the governing equations and permissible assumptions for calibrating a venturi and calculating flow using a venturi. Because a subsonic venturi (SSV) and a critical-flow venturi (CFV) both operate similarly, their governing equations are nearly the same, except for the equation describing their pressure ratio, r (*i.e.*, $r_{SSV}$ versus $r_{CFV}$). These governing equations assume one-dimensional isentropic inviscid compressible flow of an ideal gas. In paragraph (c)(4) of this section, we describe other assumptions that you may make, depending upon how you conduct your emission tests. If we do not allow you to assume that the measured flow is an ideal gas, the governing equations include a first-order correction for the behavior of a real gas; namely, the compressibility factor, Z. If good engineering judgment dictates using a value other than Z=1, you may either use an appropriate equation of state to determine values of Z as a function of measured pressures and temperatures, or you may develop your own calibration equations based on good engineering judgment. Note that the equation for the flow coefficient, $C_f$, is based on the ideal gas assumption that the isentropic exponent, γ, is equal to the ratio of specific heats, $C_p/C_v$. If good engineering judgment dictates using a real gas isentropic exponent, you may either use an appropriate equation of state to determine values of γ as a function of measured pressures and temperatures, or you may develop your own calibration equations based on good engineering judgment. Calculate molar flow rate, $\dot{n}$, as follows:

$$\dot{n} = C_d \cdot C_f \cdot \frac{A_t \cdot p_{in}}{\sqrt{Z \cdot M_{mix} \cdot R \cdot T_{in}}} \qquad \text{Eq. 1065.640-4}$$

Where:

$C_d$ = Discharge coefficient, as determined in paragraph (c)(1) of this section.

$C_f$ = Flow coefficient, as determined in paragraph (c)(2) of this section.

$A_t$ = Venturi throat cross-sectional area.

$P_{in}$ = Venturi inlet absolute static pressure.

Z = Compressibility factor.

$M_{mix}$ = Molar mass of gas mixture.

R = Molar gas constant.

$T_{in}$ = Venturi inlet absolute temperature.

(1) Using the data collected in § 1065.340, calculate $C_d$ using the following equation:

$$C_d = \dot{n}_{ref} \cdot \frac{\sqrt{Z \cdot M_{mix} \cdot R \cdot T_{in}}}{C_f \cdot A_t \cdot p_{in}} \qquad \text{Eq. 1065.640-5}$$

Where:

$\dot{n}_{ref}$ = A reference molar flow rate.

(2) Determine $C_f$ using one of the following methods:

(i) For CFV flow meters only, determine $C_{fCFV}$ from the following table based on your values for βb and γ, using linear interpolation to find intermediate values:

TABLE 2 OF § 1065.640.—$C_{fCFV}$ VERSUS β AND γ FOR CFV FLOW METERS

| $C_{fCFV}$ | | $\gamma_{dexh} = \gamma_{air} =$ 1.399 |
|---|---|---|
| β | $\gamma_{exh}$ = 1.385 | |
| 0.000 ..... | 0.6822 | 0.6846 |

TABLE 2 OF § 1065.640.—$C_{fCFV}$ VERSUS β AND γ FOR CFV FLOW METERS—Continued

| $C_{fCFV}$ | | $\gamma_{dexh} = \gamma_{air} =$ 1.399 |
|---|---|---|
| β | $\gamma_{exh}$ = 1.385 | |
| 0.400 ..... | 0.6857 | 0.6881 |
| 0.500 ..... | 0.6910 | 0.6934 |
| 0.550 ..... | 0.6953 | 0.6977 |
| 0.600 ..... | 0.7011 | 0.7036 |
| 0.625 ..... | 0.7047 | 0.7072 |
| 0.650 ..... | 0.7089 | 0.7114 |
| 0.675 ..... | 0.7137 | 0.7163 |
| 0.700 ..... | 0.7193 | 0.7219 |
| 0.720 ..... | 0.7245 | 0.7271 |
| 0.740 ..... | 0.7303 | 0.7329 |
| 0.760 ..... | 0.7368 | 0.7395 |
| 0.770 ..... | 0.7404 | 0.7431 |

TABLE 2 OF § 1065.640.—$C_{fCFV}$ VERSUS β AND γ FOR CFV FLOW METERS—Continued

| $C_{fCFV}$ | | $\gamma_{dexh} = \gamma_{air} =$ 1.399 |
|---|---|---|
| β | $\gamma_{exh}$ = 1.385 | |
| 0.780 ..... | 0.7442 | 0.7470 |
| 0.790 ..... | 0.7483 | 0.7511 |
| 0.800 ..... | 0.7527 | 0.7555 |
| 0.810 ..... | 0.7573 | 0.7602 |
| 0.820 ..... | 0.7624 | 0.7652 |
| 0.830 ..... | 0.7677 | 0.7707 |
| 0.840 ..... | 0.7735 | 0.7765 |
| 0.850 ..... | 0.7798 | 0.7828 |

(ii) For any CFV or SSV flow meter, you may use the following equation to calculate $C_f$:

$$C_f = \left[ \frac{2 \cdot \gamma \cdot \left( r^{\frac{\gamma-1}{\gamma}} - 1 \right)}{(\gamma - 1) \cdot \left( \beta^4 - r^{\frac{-2}{\gamma}} \right)} \right]^{\frac{1}{2}} \qquad \text{Eq. 1065.640-6}$$

*Where:*

γ = isentropic exponent. For an ideal gas, this is the ratio of specific heats of the gas mixture, $C_p/C_v$.

r = Pressure ratio, as determined in paragraph (c)(3) of this section.

β = Ratio of venturi throat to inlet diameters.

(3) Calculate r as follows:

(i) For SSV systems only, calculate $r_{SSV}$ using the following equation:

$$r_{SSV} = 1 - \frac{\Delta p}{p_{in}} \qquad \text{Eq. 1065.640-7}$$

Where:

$\Delta_{pSSV}$ = Differential static pressure; venturi inlet minus venturi throat.

(ii) For CFV systems only, calculate $r_{CFV}$ iteratively using the following equation:

$$r_{CFV}^{\frac{1-\gamma}{\gamma}} + \left( \frac{\gamma - 1}{2} \right) \cdot \beta^4 \cdot r_{CFV}^{\frac{2}{\gamma}} = \frac{\gamma + 1}{2} \qquad \text{Eq. 1065.640-8}$$

(4) You may make any of the following simplifying assumptions of the governing equations, or you may use good engineering judgment to develop more appropriate values for your testing:

(i) For emission testing over the full ranges of raw exhaust, diluted exhaust and dilution air, you may assume that the gas mixture behaves as an ideal gas: Z=1.

(ii) For the full range of raw exhaust you may assume a constant ratio of specific heats of γ =1.385.

(iii) For the full range of diluted exhaust and air (e.g., calibration air or dilution air), you may assume a constant ratio of specific heats of $\gamma = 1.399$.

(iv) For the full range of diluted exhaust and air, you may assume the molar mass of the mixture is a function only of the amount of water in the dilution air or calibration air, $x_{H2O}$, determined as described in § 1065.645, as follows:

$$M_{mix} = M_{air} \cdot (1 - x_{H2O}) + M_{H2O} \cdot x_{H2O} \qquad \text{Eq. 1065.640-9}$$

*Example:*

$M_{air} = 28.96559$ g/mol

$x_{H2O} = 0.0169$ mol/mol

$M_{H2O} = 18.01528$ g/mol

$M_{mix} = 28.96559 \times (1\ 0.0169) + 18.01528 \times 0.0169$

$M_{mix} = 28.7805$ g/mol

(v) For the full range of diluted exhaust and air, you may assume a constant molar mass of the mixture, $M_{mix}$, for all calibration and all testing as long as your assumed molar mass differs no more than ±1% from the estimated minimum and maximum molar mass during calibration and testing. You may assume this, using good engineering judgment, if you sufficiently control the amount of water in calibration air and in dilution air or if you remove sufficient water from both calibration air and dilution air. The following table gives examples of permissible ranges of dilution air dewpoint versus calibration air dewpoint:

TABLE 3 OF § 1065.640.—EXAMPLES OF DILUTION AIR AND CALIBRATION AIR DEWPOINTS AT WHICH YOU MAY ASSUME A CONSTANT $M_{mix}$.

| If calibration $T_{dew}$ (°C) is... | assume the following constant $M_{mix}$ (g/mol)... | for the following ranges of $T_{dew}$ (°C) during emission tests[a] |
|---|---|---|
| dry | 28.96559 | dry to 18. |
| 0 | 28.89263 | dry to 21. |
| 5 | 28.86148 | dry to 22. |
| 10 | 28.81911 | dry to 24. |
| 15 | 28.76224 | dry to 26. |
| 20 | 28.68685 | −8 to 28. |
| 25 | 28.58806 | 12 to 31. |
| 30 | 28.46005 | 23 to 34. |

[a] Range valid for all calibration and emission testing over the atmospheric pressure range (80.000 to 103.325) kPa.

(5) The following example illustrates the use of the governing equations to calculate the discharge coefficient, $C_d$ of an SSV flow meter at one reference flow meter value. Note that calculating $C_d$ for a CFV flow meter would be similar, except that $C_f$ would be determined from Table 1 of this section or calculated iteratively using values of $\beta$ and $\gamma$ as described in paragraph (c)(2) of this section.

*Example:*

$\dot{n}_{ref} = 57.625$ mol/s

$Z = 1$

$M_{mix} = 28.7805$ g/mol $= 0.0287805$ kg/mol

$R = 8.314472$ J/(mol·K)

$T_{in} = 298.15$ K

$A_t = 0.01824$ m$^2$

$p_{in} = 99132.0$ Pa

$\gamma = 1.399$

$\beta = 0.8$

$\Delta p = 2.312$ kPa

$$r_{SSV} = 1 - \frac{2.312}{99.132} = 0.977$$

$$C_f = \left[ \frac{2 \cdot 1.399 \cdot \left( 0.977^{\frac{1.399-1}{1.399}} - 1 \right)}{(1.399 - 1) \cdot \left( 0.8^4 - 0.977^{\frac{-2}{1.399}} \right)} \right]^{\frac{1}{2}}$$

$C_f = 0.274$

$$C_d = 57.625 \cdot \frac{\sqrt{1 \cdot 0.0287805 \cdot 8.314472 \cdot 298.15}}{0.274 \cdot 0.01824 \cdot 99132.0}$$

$C_d = 0.981$

(d) *SSV calibration.* Perform the following steps to calibrate an SSV flow meter:

(1) Calculate the Reynolds number, $Re_{\#}$, for each reference molar flow rate, using the throat diameter of the venturi, $d_t$. Because the dynamic viscosity, $\mu$, is needed to compute $Re_{\#}$, you may use your own fluid viscosity model to determine $\mu$ for your calibration gas (usually air), using good engineering judgment. Alternatively, you may use the Sutherland three-coefficient viscosity model to approximate $\mu$, as shown in the following sample calculation for $Re_{\#}$:

$$Re^{\#} = \frac{4 \cdot M_{mix} \cdot \dot{n}_{ref}}{\pi \cdot d_t \cdot \mu} \qquad \text{Eq. 1065.640-10}$$

Where, using the Sutherland three-coefficient viscosity model:

$$\mu = \mu_0 \cdot \left(\frac{T_{in}}{T_0}\right)^{\frac{3}{2}} \cdot \left(\frac{T_0 + S}{T_{in} + S}\right) \qquad \text{Eq. 1065.640-11}$$

Where:

$\mu$ = Dynamic viscosity of calibration gas.

$\mu_0$ = Sutherland reference viscosity.

$T_0$ = Sutherland reference temperature.

S = Sutherland constant.

TABLE 3 OF § 1065.640.—SUTHERLAND THREE-COEFFICIENT VISCOSITY MODEL PARAMETERS

| Gas [a] | $\mu_0$ kg/(m · s) | $T_0$ K | S K | Temp range within ± 2% error K | Pressure limit kPa |
|---|---|---|---|---|---|
| Air | $1.716 \cdot 10^{-5}$ | 273 | 111 | 170 to 1900 | ≤ 1800 |
| $CO_2$ | $1.370 \cdot 10_{-5}$ | 273 | 222 | 190 to 1700 | ≤ 3600 |
| $H_2O$ | $1.12 \cdot 10^{-5}$ | 350 | 1064 | 360 to 1500 | ≤ 10000 |
| $O_2$ | $1.919 \cdot 10^{-5}$ | 273 | 139 | 190 to 2000 | ≤ 2500 |
| $N_2$ | $1.663 \cdot 10^{-5}$ | 273 | 107 | 100 to 1500 | ≤ 1600 |

[a] Use tabulated parameters only for the pure gases, as listed. Do not combine parameters in calculations to calculate viscosities of gas mixtures.

*Example:*

$\mu_0 = 1.7894 \cdot 10^{-5}$ kg/(m·s)

$T_0 = 273.11$ K

S = 110.56 K

$$\mu = 1.7894 \cdot 10^{-5} \cdot \left(\frac{298.15}{273.11}\right)^{\frac{3}{2}} \cdot \left(\frac{273.11 + 110.56}{298.15 + 110.56}\right)$$

$\mu = 1.916 \cdot 10^{-5}$ kg/(m·s)

$M_{mix} = 28.7805$ g/mol

$\dot{n}_{ref} = 57.625$ mol/s

$d_t = 152.4$ mm

$T_{in} = 298.15$ K

$$Re^{\#} = \frac{4 \cdot 28.7805 \cdot 57.625}{3.14159 \cdot 152.4 \cdot 1.916 \cdot 10^{-5}}$$

$Re^{\#} = 7.2317 \cdot 10^5$

(2) Create an equation for $C_d$ versus $Re^{\#}$, using paired values of ($Re^{\#}$, $C_d$). For the equation, you may use any mathematical expression, including a polynomial or a power series. The following equation is an example of a commonly used mathematical expression for relating $C_d$ and $Re^{\#}$:

$$C_d = a_0 - a_1 \cdot \sqrt{\frac{10^6}{Re^{\#}}} \qquad \text{Eq. 1065.640-12}$$

(3) Perform a least-squares regression analysis to determine the best-fit coefficients to the equation and calculate the equation's regression statistics, SEE and $r^2$, accordingto § 1065.602.

(4) If the equation meets the criteria of SEE < 0.5% · $\dot{n}_{refmax}$ and $r^2 \geq 0.995$, you may use the equation to determine $C_d$ for emission tests, as described in § 1065.642.

(5) If the SEE and $r^2$ criteria are not met, you may use good engineering judgment to omit calibration data points to meet the regression statistics. You must use at least seven calibration data points to meet the criteria.

(6) If omitting points does not resolve outliers, take corrective action. For example, select another mathematical expression for the $C_d$ versus $Re^{\#}$ equation, check for leaks, or repeat the calibration process. If you must repeat the process, we recommend applying tighter tolerances to measurements and allowing more time for flows to stabilize.

(7) Once you have an equation that meets the regression criteria, you may use the equation only to determine flow rates that are within the range of the reference flow rates used to meet the $C_d$ versus $Re^{\#}$ equation's regression criteria.

(e) *CFV calibration.* Some CFV flow meters consist of a single venturi and some consist of multiple venturis, where different combinations of venturis are used to meter different flow rates. For CFV flow meters that consist of multiple venturis, either calibrate each venturi independently to determine a separate discharge coefficient, $C_d$, for each venturi, or calibrate each combination of venturis as one venturi. In the case where you calibrate a combination of venturis, use the sum of the active venturi throat areas as $A_t$, the sum of the active venturi throat diameters as $d_t$, and the ratio of venturi throat to inlet diameters as the ratio of the sum of the active venturi throat diameters to the diameter of the common entrance to all of the venturis. To determine the $C_d$ for a single venturi or a single combination of venturis, perform the following steps:

(1) Use the data collected at each calibration set point to calculate an individual $C_d$ for each point using Eq. 1065.640–4.

(2) Calculate the mean and standard deviation of all the $C_d$ values according to Eqs. 1065.602–1 and 1065.602–2.

(3) If the standard deviation of all the $C_d$ values is less than or equal to 0.3% of the mean $C_d$, then use the mean $C_d$ in Eq 1065.642–6, and use the CFV only down to the lowest $\Delta p_{CFV}$ measured during calibration.

(4) If the standard deviation of all the $C_d$ values exceeds 0.3% of the mean $C_d$, omit the $C_d$ values corresponding to the data point collected at the lowest $\Delta p_{CFV}$ measured during calibration.

(5) If the number of remaining data points is less than seven, take corrective action by checking your calibration data or repeating the calibration process. If you repeat the calibration process, we recommend checking for leaks, applying tighter tolerances to measurements and allowing more time for flows to stabilize.

(6) If the number of remaining $C_d$ values is seven or greater, recalculate

the mean and standard deviation of the remaining $C_d$ values.

(7) If the standard deviation of the remaining $C_d$ values is less than or equal to 0.3 % of the mean of the remaining $C_d$, use that mean $C_d$ in Eq 1065.642–6, and use the CFV values only down to the lowest $\Delta p_{CFV}$ associated with the remaining $C_d$.

(8) If the standard deviation of the remaining $C_d$ still exceeds 0.3% of the mean of the remaining $C_d$ values, repeat the steps in paragraph (e)(4) through (8) of this section.

**§ 1065.642 SSV, CFV, and PDP molar flow rate calculations.**

This section describes the equations for calculating molar flow rates from various flow meters. After you calibrate a flow meter according to § 1065.640, use the calculations described in this section to calculate flow during an emission test.

(a) *PDP molar flow rate.* Based upon the speed at which you operate the PDP for a test interval, select the corresponding slope, $a_1$, and intercept, $a_0$, as calculated in § 1065.640, to calculate molar flow rate, $\dot{n}$, as follows:

$$\dot{n} = f_{nPDP} \cdot \frac{p_{in} \cdot V_{rev}}{R \cdot T_{in}} \qquad \text{Eq. 1065.642-1}$$

Where:

$$V_{rev} = \frac{a_1}{f_{nPDP}} \cdot \sqrt{\frac{p_{out} - p_{in}}{p_{in}} + a_0} \qquad \text{Eq. 1065.642-2}$$

*Example:*

$a_1$ = 50.43
$f_{nPDP}$ = 755.0 rev/min = 12.58 rev/s
$p_{out}$ = 99950 Pa
$p_{in}$ = 98575 Pa
$a_0$ = 0.056
R = 8.314472 J/(mol·K)
$T_{in}$ = 323.5 K
$C_p$ = 1000 (J/m³)/kPa
$C_t$ = 60 s/min

$$V_{rev} = \frac{50.43}{755} \cdot \sqrt{\frac{99950 - 98575}{98575}} + 0.056$$

$v_{rev}$ = 0.06389 m³/rev

$$\dot{n} = 12.58 \cdot \frac{98575 \cdot 0.06389}{8.314472 \cdot 323.5}$$

$\dot{n}$ = 29.464 mol/s

(b) *SSV molar flow rate.* Based on the $C_d$ versus Re# equation you determined according to § 1065.640, calculate SSV molar flow rate, $\dot{n}\dot{n}$ during an emission test as follows:

$$\dot{n} = C_d \cdot C_f \cdot \frac{A_t \cdot p_{in}}{\sqrt{Z \cdot M_{mix} \cdot R \cdot T_{in}}} \qquad \text{Eq. 1065.642-3}$$

*Example:*

$A_t$ = 0.01824 m²
$p_{in}$ = 99132 Pa
Z = 1
$M_{mix}$ = 28.7805 g/mol = 0.0287805 kg/mol
R = 8.314472 J/(mol·K)
$T_{in}$ = 298.15 K
Re# = $7.232 \cdot 10^5$
$\gamma$ = 1.399
$\beta$ = 0.8
$\Delta p$ = 2.312 kPa
Using Eq. 1065.640–6,
$r_{ssv}$ = 0.997
Using Eq. 1065.640–5,
$C_f$ = 0.274
Using Eq. 1065.640–4,
$C_d$ = 0.990

$$\dot{n} = 0.990 \cdot 0.274 \cdot \frac{0.01824 \cdot 99132}{\sqrt{1 \cdot 0.0287805 \cdot 8.314472 \cdot 298.15}}$$

$\dot{n}$= 58.173 mol/s

(c) *CFV molar flow rate.* Some CFV flow meters consist of a single venturi and some consist of multiple venturis, where different combinations of venturis are used to meter different flow rates. If you use multiple venturis and you calibrated each venturi independently to determine a separate discharge coefficient, $C_d$, for each venturi, calculate the individual molar flow rates through each venturi and sum all their flow rates to determine $\dot{n}$. If you use multiple venturis and you calibrated each combination of venturis, calculate using the sum of the active venturi throat areas as $A_t$, the sum of the active venturi throat diameters as $d_t$, and the ratio of venturi throat to inlet diameters as the ratio of the sum of the active venturi throat diameters to the diameter of the common entrance to all of the venturis. To calculate the molar flow rate through one venturi or one combination of venturis, use its respective mean $C_d$ and other constants you determined according to § 1065.640 and calculate its molar flow rate $\dot{n}$ during an emission test, as follows:

$$\dot{n} = C_d \cdot C_f \cdot \frac{A_t \cdot p_{in}}{\sqrt{Z \cdot M_{mix} \cdot R \cdot T_{in}}} \qquad \text{Eq. 1065.642-6}$$

*Example:*

$C_d$ = 0.985
$C_f$ = 0.7219
$A_t$ = 0.00456 m²
$p_{in}$ = 98836 Pa
Z = 1
$M_{mix}$ = 28.7805 g/mol = 0.0287805 kg/mol
R = 8.314472 J/(mol·K)
$T_{in}$ = 378.15 K

$$\dot{n} = 0.985 \cdot 0.712 \frac{0.00456 \cdot 98836}{\sqrt{1 \cdot 0.0287805 \cdot 8.314472 \cdot 378.15}}$$

$\dot{n}$ = 33.690 mol/s

**§ 1065.645 Amount of water in an ideal gas.**

This section describes how to determine the amount of water in an ideal gas, which you need for various performance verifications and emission calculations. Use the equation for the vapor pressure of water in paragraph (a) of this section or another appropriate equation and, depending on whether you measure dewpoint or relative humidity, perform one of the calculations in paragraph (b) or (c) of this section.

(a) *Vapor pressure of water.* Calculate the vapor pressure of water for a given saturation temperature condition, $T_{sat}$, as follows, or use good engineering judgment to use a different relationship of the vapor pressure of water to a given saturation temperature condition:

(1) For humidity measurements made at ambient temperatures from (0 to 100) °C, or for humidity measurements made over super-cooled water at ambient temperatures from (−50 to 0) °C, use the following equation:

$$-\log_{10}(p_{H20}) = 10.79574 \cdot \left(\frac{273.16}{T_{sat}} - 1\right) + 5.02800 \cdot \log_{10}\left(\frac{T_{sat}}{273.16}\right) + 1.50475 \cdot 10^{-4} \cdot \left(10^{-8.2969 \cdot \left(\frac{T_{sat}}{273.16}\right)} - 1\right) + 0.42873 \cdot 10^{-3} \cdot \left(1 - 10^{4.76955 \cdot \left(1 - \frac{273.16}{T_{sat}}\right)}\right) + 0.21386 \qquad \text{Eq. 1065.645-1}$$

Where:

$p_{H20}$ = vapor pressure of water at saturation temperature condition, kPa.

$T_{sat}$ = saturation temperature of water at measured conditions, K.

*Example:*

$T_{sat}$ = 9.5 °C

$T_{dsat}$= 9.5 + 273.15 = 282.65 K

$$-\log_{10}(p_{H20}) = 10.79574 \cdot \left(\frac{273.16}{282.65} - 1\right) + 5.02800 \cdot \log_{10}\left(\frac{282.65}{273.16}\right) + 1.50475 \cdot 10^{-4} \cdot \left(10^{-8.2969 \cdot \left(\frac{282.65}{273.16}\right)} - 1\right) + 0.42873 \cdot 10^{-3} \cdot \left(1 - 10^{4.76955 \cdot \left(1 - \frac{273.16}{282.65}\right)}\right) + 0.21386$$

$-\log_{10}(p_{H20}) = -0.074297$

$p_{H20} = 10^{0.074297} = 1.1866$ kPa

(2) For humidity measurements over ice at ambient temperatures from (−100 to 0) °C, use the following equation:

$$-\log_{10}(p_{sat}) = 9.09685 \cdot \left(\frac{273.16}{T_{sat}} - 1\right) + 3.56654 \cdot \log_{10}\left(\frac{273.16}{T_{sat}}\right) + 0.87682 \cdot \left(\frac{257.75}{T_{sat}} - 1\right) + 0.21386 \qquad \text{Eq. 1065.645-2}$$

*Example:*

$T_{ice}$ = −15.4 °C

$T_{ice}$ = −15.4 + 273.15 = 257.75 K

$$-\log_{10}(p_{sat}) = 9.09685 \cdot \left(\frac{273.16}{257.75} - 1\right) + 3.56654 \cdot \log_{10}\left(\frac{273.16}{257.75}\right) + 0.87682 \cdot \left(\frac{257.75}{273.16} - 1\right) + 0.21386$$

$-\log_{10}(p_{H20}) = -0.79821$

$p_{H20} = 10^{0.074297} = 0.15941$ kPa

(b) *Dewpoint.* If you measure humidity as a dewpoint, determine the amount of water in an ideal gas, $x_{H20}$, as follows:

$$x_{H2O} = \frac{p_{H20}}{p_{abs}} \qquad \text{Eq. 1065.645-3}$$

Where:

$x_{H20}$ = amount of water in an ideal gas.

$p_{H20}$ = water vapor pressure at the measured dewpoint, $T_{sat} = T_{dew}$.

$p_{abs}$ = wet static absolute pressure at the location of your dewpoint measurement.

*Example:*

$p_{abs}$ = 99.980 kPa

$T_{sat} = T_{dew}$ = 9.5 °C

Using Eq. 1065.645–2,

$p_{H20}$ = 1.1866 kPa

$x_{H2O}$ = 1.1866/99.980

$x_{H2O}$ = 0.011868 mol/mol

(c) *Relative humidity.* If you measure humidity as a relative humidity, RH%, determine the amount of water in an ideal gas, $x_{H20}$, as follows:

$$x_{H2O} = \frac{RH\% \cdot p_{H20}}{p_{abs}} \qquad \text{Eq. 1065.645-4}$$

Where:

$x_{H20}$ = amount of water in an ideal gas.

RH% = relative humidity.

$p_{H20}$ = water vapor pressure at 100% relative humidity at the location of your relative humidity measurement, $T_{sat} = T_{amb}$.

$P_{abs}$ = wet static absolute pressure at the location of your relative humidity measurement.

*Example:*

RH% = 50.77%

$p_{abs}$ = 99.980 kPa

$T_{sat} = T_{amb}$ = 20 °C

Using Eq. 1065.645–2,

$p_{H20}$ = 2.3371 kPa

$x_{H2O}$ = (50.77% · 2.3371)/99.980

$x_{H2O}$ = 0.011868 mol/mol

**§ 1065.650 Emission calculations.**

(a) *General.* Calculate brake-specific emissions over each test interval in a duty cycle. Refer to the standard-setting part for any calculations you might need to determine a composite result, such as a calculation that weights and sums the results of individual test intervals in a duty cycle. We specify three alternative ways to calculate brake-specific emissions, as follows:

(1) For any testing, you may calculate the total mass of emissions, as described in paragraph (b) of this section, and divide it by the total work generated over the test interval, as described in paragraph (c) of this section, using the following equation:

$$e = \frac{m}{W} \qquad \text{Eq. 1065.650-1}$$

*Example:*

$m_{NO_X}$ = 64.975 g
W = 25.783 kW·hr
$e_{NO_X}$ = 64.975/25.783
$e_{NO_X}$ = 2.520 g/(kW·hr)

(2) For discrete-mode steady-state testing, you may calculate the ratio of emission mass rate to power, as described in paragraph (d) of this section, using the following equation:

$$e = \frac{\overline{\dot{m}}}{\overline{P}} \qquad \text{Eq. 1065.650-2}$$

(3) For field testing, you may calculate the ratio of total mass to total work, where these individual values are determined as described in paragraph (e) of this section. You may also use this approach for laboratory testing, consistent with good engineering judgment. This is a special case in which you use a signal linearly proportional to raw exhaust molar flow rate to determine a value proportional to total emissions. You then use the same linearly proportional signal to determine total work using a chemical balance of fuel, intake air, and exhaust as described in § 1065.655, plus information about your engine's brake-specific fuel consumption. Under this method, flow meters need not meet accuracy specifications, but they must meet the applicable linearity and repeatability specifications in subpart D or subpart J of this part. The result is a brake-specific emission value calculated as follows:

$$e = \frac{\tilde{m}}{\tilde{W}} \qquad \text{Eq. 1065.650-3}$$

*Example:*

$\tilde{m}$ = 805.5 ~g
$\tilde{w}$ = 52.102 ~kW·hr
$e_{CO}$ = 805.5/52.102
$e_{CO}$ = 2.520 g/(kW·hr)

(b) *Total mass of emissions.* To calculate the total mass of an emission, multiply a concentration by its respective flow. For all systems, make preliminary calculations as described in paragraph (b)(1) of this section, then use the method in paragraphs (b)(2) through (4) of this section that is appropriate for your system. Calculate the total mass of emissions as follows:

(1) *Concentration corrections.* Perform the following sequence of preliminary calculations on recorded concentrations:

(i) Correct all concentrations measured on a ''dry'' basis to a ''wet'' basis, including dilution air background concentrations, as described in § 1065.659.

(ii) Calculate all HC concentrations, including dilution air background concentrations, as described in § 1065.660.

(iii) For emission testing with an oxygenated fuel, calculate any HC concentrations, including dilution air background concentrations, as described in § 1065.665. See subpart I of this part for testing with oxygenated fuels.

(iv) Correct the total mass of $NO_X$ based on intake-air humidity as described in § 1065.670.

(v) Calculate brake-specific emissions before and after correcting for drift, including dilution air background concentrations, according to § 1065.672.

(2) *Continuous sampling.* For continuous sampling, you must frequently record a continuously updated concentration signal. You may measure this concentration from a changing flow rate or a constant flow rate (including discrete-mode steady-state testing), as follows:

(i) *Varying flow rate.* If you continuously sample from a changing exhaust flow rate, synchronously multiply it by the flow rate of the flow from which you extracted it. We consider the following to be examples of changing flows that require a continuous multiplication of concentration times molar flow rate: Raw exhaust, exhaust diluted with a constant flow rate of dilution air, and CVS dilution with a CVS flow meter that does not have an upstream heat exchanger or electronic flow control. Account for dispersion and time alignment as described in § 1065.201. This multiplication results in the flow rate of the emission itself. Integrate the emission flow rate over a test interval to determine the total emission. If the total emission is a molar quantity, convert this quantity to a mass by multiplying it by its molar mass, M. The result is the mass of the emission, m.Calculate m for continuous sampling with variable flow using the following equations:

$$m = M \cdot \sum_{i=1}^{N} x_i \cdot \dot{n}_i \cdot \Delta t \qquad \text{Eq. 1065.650-4}$$

*Example:*

$M_{NMHC}$ = 13.875389 g/mol
N = 1200
$x_{NMHC1}$ = 84.5 μmol/mol = $84.5 \cdot 10^{-6}$ mol/mol
$x_{NMHC2}$ = 86.0 μmol/mol = $86.0 \cdot 10^{-6}$ mol/mol
$\dot{n}_{exh1}$ = 2.876 mol/s
$\dot{n}_{exh2}$ = 2.224 mol/s
$f_{record}$ = 1 Hz
Using Eq. 1065.650 − 5,
Δt = 1/1 = 1 s
$m_{NMHC} = 13.875389 \cdot (84.5 \cdot 10^{-6} \cdot 2.876 + 86.0 \cdot 10^{-6} \cdot 2.224 + \ldots + x_{NMHC1200} \cdot \dot{n}_{exh}) \cdot 1$
$m_{NMHC}$ = 25.23 g

(ii) *Constant flow rate.* If you continuously sample from a constant exhaust flow rate, calculate the mean concentration recorded over the test interval and treat the mean as a batch sample, as described in paragraph (b)(3)(ii) of this section. We consider the following to be examples of constant exhaust flows: CVS diluted exhaust with a CVS flow meter that has either an upstream heat exchanger, electronic flow control, or both.

(3) *Batch sampling.* For batch sampling, the concentration is a single value from a proportionally extracted batch sample (such as a bag, filter, impinger, or cartridge). In this case, multiply the mean concentration of the batch sample by the total flow from which the sample was extracted. You may calculate total flow by integrating a changing flow rate or by determining the mean of a constant flow rate, as follows:

(i) *Varying flow rate.* If you collect a batch sample from a changing exhaust flow rate, extract a sample proportional to the changing exhaust flow rate. We consider the following to be examples of changing flows that require proportional sampling: Raw exhaust, exhaust diluted with a constant flow rate of dilution air, and CVS dilution with a CVS flow meter that does not have an upstream heat exchanger or electronic flow control. Integrate the flow rate over a test interval to determine the total flow from which you extracted the proportional sample. Multiply the mean concentration of the batch sample by the total flow from which the sample was extracted. If the total emission is a molar quantity, convert this quantity to a mass by multiplying it by its molar mass, M. The result is the mass of the emission, m. In the case of PM emissions, where

the mean PM concentration is already in units of mass per mole of sample, $\bar{M}_{PM}$, simply multiply it by the total flow. The result is the total mass of PM, $m_{PM}$. Calculate m for batch sampling with variable flow using the following equation:

$$m = M \cdot \bar{x} \cdot \sum_{i=1}^{N} \dot{n}_i \cdot \Delta t \qquad \text{Eq. 1065.650-6}$$

*Example:*

$M_{NOx}$ = 46.0055 g/mol
N = 9000
$\bar{x}_{NOx}$ = 85.6 μmol/mol = $85.6 \cdot 10^{-6}$ mol/mol
$\dot{n}_{dexh1}$ = 25.534 mol/s
$\dot{n}_{dexh2}$ = 26.950 mol/s
$f_{record}$ = 5 Hz
Using Eq. 1065.650–5,
Δt = 1/5 = 0.2
$m_{NOx} = 46.0055 \cdot 85.6 \cdot 10^{-6} \cdot (25.534 + 26.950 + \ldots + \dot{n}_{exh9000}) \cdot 0.2$
$m_{NOx}$ = 4.201 g

(ii) *Constant flow rate.* If you batch sample from a constant exhaust flow rate, extract a sample at a constant flow rate. We consider the following to be examples of constant exhaust flows: CVS diluted exhaust with a CVS flow meter that has either an upstream heat exchanger, electronic flow control, or both. Determine the mean molar flow rate from which you extracted the constant flow rate sample. Multiply the mean concentration of the batch sample by the mean molar flow rate of the exhaust from which the sample was extracted, and multiply the result by the time of the test interval. If the total emission is a molar quantity, convert this quantity to a mass by multiplying it by its molar mass, M. The result is the mass of the emission, m. In the case of PM emissions, where the mean PM concentration is already in units of mass per mole of sample $\bar{M}_{PM}$, simply multiply it by the total flow, and the result is the total mass of PM, $m_{PM}$, Calculate m for sampling with constant flow using the following equations:

$$m = M \cdot \bar{x} \cdot \bar{\dot{n}} \cdot \Delta t \qquad \text{Eq. 1065.650-7}$$

and for PM or any other analysis of a batch sample that yields a mass per mole of sample,

$$\bar{M} = M \cdot \bar{x} \qquad \text{Eq. 1065.650-8}$$

*Example:*

$\bar{M}_{PM}$ = 144.0 μg/mol = $144.0 \cdot 10^{-6}$ g/mol
$\bar{\dot{n}}_{dexh}$ = 57.692 mol/s
Δt = 1200 s
$m_{PM} = 144.0 \cdot 10^{-6} \cdot 57.692 \cdot 1200$
$m_{PM}$ = 9.9692 g

(4) *Additional provisions for diluted exhaust sampling; continuous or batch.* The following additional provisions apply for sampling emissions from diluted exhaust:

(i) For sampling with a constant dilution ratio (DR) of air flow versus exhaust flow (e.g., secondary dilution for PM sampling), calculate m using the following equation:

$$m = m_{dil} \cdot (DR + 1) \qquad \text{Eq. 1065.650-9}$$

*Example:*

$m_{PMdil}$ = 6.853 g
DR = 5:1
$m_{PM} = 6.853 \cdot (5 + 1)$
$m_{PM}$ = 41.118 g

(ii) For continuous or batch sampling, you may measure background emissions in the dilution air. You may then subtract the measured background emissions, as described in § 1065.667.

(c) *Total work.* To calculate total work, multiply the feedback engine speed by its respective feedback torque. Integrate the resulting value for power over a test interval. Calculate total work as follows:

$$W = \sum_{i=1}^{N} P_i \cdot \Delta t \qquad \text{Eq. 1065.650-10}$$

$$P_i = f_{ni} \cdot T_i \qquad \text{Eq. 1065.650-11}$$

*Example:*

N = 9000
$f_{n1}$ = 1800.2 rev/min
$f_{n2}$ = 1805.8 rev/min
$T_1$ = 177.23 N·m
$T_2$ = 175.00 N·m
$C_{rev} = 2 \cdot \pi$ rad/rev
$C_{t1}$ = 60 s/min
$C_p$ = 1000 (N·m)/kW
$f_{record}$ = 5 Hz
$C_{t2}$ = 3600 s/hr

$$P_1 = \frac{1800.2 \cdot 177.23 \cdot 2 \cdot 3.14159}{60 \cdot 1000}$$

$P_1$ = 33.41 kW
$P_2$ = 33.09 kW
Using Eq. 1065.650–5,
Δt = 1/5 = 0.2 s

$$W = \frac{(33.41 + 33.09 + \ldots + P_{9000}) \cdot 0.2}{3600}$$

W = 16.875 kW·hr

(d) *Steady-state mass rate divided by power.* To determine steady-state brake-specific emissions for a test interval as described in paragraph (a)(2) of this section, calculate the mean steady-state mass rate of the emission, $\bar{\dot{m}}$, and the mean steady-state power, $\bar{P}$, as follows:

(1) To calculate, $\bar{\dot{m}}$, multiply its mean concentration, $\bar{x}$, by its corresponding mean molar flow rate, $\bar{\dot{n}}$. If the result is a molar flow rate, convert this quantity to a mass rate by multiplying it by its molar mass, M. The result is the mean mass rate of the emission, $\dot{m}_{PM}$. In the case of PM emissions, where the mean PM concentration is already in units of mass per mole of sample, $\bar{M}_{PM}$, simply multiply it by the mean molar flow rate, $\bar{\dot{n}}$. The result is the mass rate of PM, $\dot{m}_{PM}$. Calculate $\bar{\dot{m}}$ using the following equation:

$$\bar{\dot{m}} = M \cdot \bar{x} \cdot \bar{\dot{n}} \qquad \text{Eq. 1065.650-12}$$

(2) Calculate $\bar{P}$ using the following equation:

$$\bar{P} = \bar{f}_n \cdot \bar{T} \qquad \text{Eq. 1065.650-13}$$

(3) *Ratio of mass and work.* Divide emission mass rate by power to calculate a brake-specific emission result as described in paragraph (a)(2) of this section.

(4) *Example.* The following example shows how to calculate mass of emissions using mean mass rate and mean power:

$M_{CO}$ = 28.0101 g/mol
$\bar{x}_{CO}$ = 12.00 mmol/mol = 0.01200 mol/mol
$\bar{\dot{n}}$ = 1.530 mol/s
$\bar{f}$
$\bar{T}$ = 121.50 N·m
$\bar{\dot{m}}$ = 28.0101·0.01200·1.530
$\bar{\dot{m}}$ = 0.514 g/s
$\bar{P}$ = 121.5·375.37
$\bar{P}$ = 45607 W = 45.607 kW
$e_{CO}$ = 0.514/45.61
$e_{CO}$ = 0.0113 g/(kW·hr)

(e) *Ratio of total mass of emissions to total work.* To determine brake-specific emissions for a test interval as described in paragraph (a)(3) of this section, calculate a value proportional to the total mass of each emission. Divide each proportional value by a value that is similarly proportional to total work.

(1) *Total mass.* To determine a value proportional to the total mass of an emission, determine total mass as described in paragraph (b) of this section, except substitute for the molar flow rate, $\dot{n}$, or the total flow, n, with a signal that is linearly proportional to molar flow rate, $\bar{\dot{n}}$, or linearly proportional to total flow, $\tilde{n}$, as follows:

$$\tilde{\dot{m}}_{fueli} = \frac{1}{w_{fuel}} \cdot \frac{M_C \cdot \tilde{\dot{n}}_i \cdot x_{Cproddryi}}{1 + x_{H2Oi}} \qquad \text{Eq. 1065.650-14}$$

(2) *Total work*. To calculate a value proportional to total work over a test interval, integrate a value that is proportional to power. Use information about the brake-specific fuel consumption of your engine, $e_{fuel}$, to convert a signal proportional to fuel flow rate to a signal proportional to power. To determine a signal proportional to fuel flow rate, divide a signal that is proportional to the mass rate of carbon products by the fraction of carbon in your fuel, $w_c$. For your fuel, you may use a measured $w_c$ or you may use the default values in Table 1 of § 1065.655. Calculate the mass rate of carbon from the amount of carbon and water in the exhaust, which you determine with a chemical balance of fuel, intake air, and exhaust as described in § 1065.655. In the chemical balance, you must use concentrations from the flow that generated the signal proportional to molar flow rate, $\bar{n}$, in paragraph (e)(1) of this section. Calculate a value proportional to total work as follows:

$$\tilde{W} = \sum_{i=1}^{N} \tilde{P}_i \cdot \Delta t \qquad \text{Eq. 1065.650-15}$$

Where:

$$\tilde{P}_i = \frac{\tilde{\dot{m}}_{fueli}}{e_{fuel}} \qquad \text{Eq. 1065.650-16}$$

(3) Divide the value proportional to total mass by the value proportional to total work to determine brake-specific emissions, as described in paragraph (a)(3) of this section.

(4) The following example shows how to calculate mass of emissions using proportional values:

$N = 3000$

$f_{record} = 5$ Hz

$e_{fuel} = 285$ g/(kW·hr)

$w_{fuel} = 0.869$ g/g

$M_c = 12.0107$ g/mol

$\dot{n}_1 = 3.922$ ~mol/s = 14119.2 mol/hr

$x_{Cproddry1} = 91.634$ mmol/mol = 0.091634 mol/mol

$x_{H2O1} = 27.21$ mmol/mol = 0.02721 mol/mol

Using 1065.650–5,

$\Delta t = 0.2$ s

$$\tilde{W} = \frac{12.0107 \cdot \left[ \frac{3.922 \cdot 0.091634}{1 + 0.02721} + \frac{\tilde{\dot{n}}_2 \cdot x_{Cproddry2}}{1 + x_{H202}} + \ldots + \frac{\tilde{\dot{n}}_{3000} \cdot x_{Cpdry3000}}{1 + x_{H2On3000}} \right] \cdot 0.2}{285 \cdot 0.869}$$

$\tilde{W} = 5.09$ ~ (kW·hr)

(f) *Rounding*. Round emission values only after all calculations are complete and the result is in g/(kW·hr) or units equivalent to the units of the standard, such as g/(hp·hr). See the definition of ''Round'' in § 1065.1001.

**§ 1065.655 Chemical balances of fuel, intake air, and exhaust.**

(a) *General*. Chemical balances of fuel, intake air, and exhaust may be used to calculate flows, the amount of water in their flows, and the wet concentration of constituents in their flows. With one flow rate of either fuel, intake air, or exhaust, you may use chemical balances to determine the flows of the other two. For example, you may use chemical balances along with either intake air or fuel flow to determine raw exhaust flow.

(b) *Procedures that require chemical balances*. We require chemical balances when you determine the following:

(1) A value proportional to total work, $\tilde{W}$, when you choose to determine brake-specific emissions as described in § 1065.650(e).

(2) The amount of water in a raw or diluted exhaust flow, $x_{H2O}$, when you do not measure the amount of water to correct for the amount of water removed by a sampling system. Correct for removed water according to § 1065.659(c)(2).

(3) The flow-weighted mean fraction of dilution air in diluted exhaust $\bar{x}_{dil}$, when you do not measure dilution air flow to correct for background emissions as described in § 1065.667(c). Note that if you use chemical balances for this purpose, you are assuming that your exhaust is stoichiometric, even if it is not.

(c) *Chemical balance procedure*. The calculations for a chemical balance involve a system of equations that require iteration. We recommend using a computer to solve this system of equations. You must guess the initial values of up to three quantities: the amount of water in the measured flow, $x_{H2O}$, fraction of dilution air in diluted exhaust, $x_{dil}$, and the amount of products on a $C_1$ basis per dry mole of dry measured flow, $x_{Cproddry}$. For each emission concentration, x, and amount of water $x_{H2O}$, you must determine their completely dry concentrations. $x_{dry}$ and $x_{H2Odry}$. You must also use your fuel's atomic hydrogen-to-carbon ratio, α, and oxygen-to-carbon ratio, β. For your fuel, you may measure α and β or you may use the default values in Table 1 of § 1065.650. Use the following steps to complete a chemical balance:

(1) Convert your measured concentrations such as, $x_{CO2meas}$, $x_{NOmeas}$, and $x_{H2Oint}$, to dry concentrations by dividing them by one minus the amount of water present during their respective measurements; for example: $x_{H2OxCO2}$, $x_{H2OxNO}$, and $x_{H2Oint}$. If the amount of water present during a ''wet'' measurement is the same as the unknown amount of water in the exhaust flow, $x_{H2O}$, iteratively solve for that value in the system of equations. If you measure only total $NO_X$ and not NO and $NO_2$ separately, use good engineering judgement to estimate a split in your total $NO_X$ concentration between NO and $NO_2$ for the chemical balances. For example, if you measure emissions from a stoichiometric spark-ignition engine, you may assume all $NO_X$ is NO. For a compression-ignition engine, you may assume that your molar concentration of $NO_X$, $x_{NOX}$, is 75% NO and 25% $NO_2$ For $NO_2$ storage aftertreatment systems, you may assume $x_{NOX}$ is 25% NO and 75% $NO_2$. Note that for calculating the mass of $NO_X$ emissions, you must use the molar mass of $NO_2$ for the effective molar mass of all $NO_X$ species, regardless of the actual $NO_2$ fraction of $NO_X$.

(2) Enter the equations in paragraph (c)(4) of this section into a computer program to iteratively solve for $x_{H2O}$ and $x_{Cproddry}$. If you measure raw exhaust flow, set $x_{dil}$ equal to zero. If you measure diluted exhaust flow, iteratively solve for $x_{dil}$. Use good engineering judgment to guess initial values for $x_{H2O}$, $x_{Cproddry}$, and $x_{dil}$. We

recommend guessing an initial amount of water that is about twice the amount of water in your intake or dilution air. We recommend guessing an initial value of $x_{Cproddry}$ as the sum of your measured $CO_2$, CO, and THC values. If you measure diluted exhaust, we also recommend guessing an initial $x_{dil}$ between 0.75 and 0.95, such as 0.8. Iterate values in the system of equations until the most recently updated guesses are all within ±1% of their respective most recently calculated values.

(3) Use the following symbols and subscripts in the equations for this paragraph (c):

$x_{H2O}$ = Amount of water in measured flow.

$x_{H2Odry}$ = Amount of water per dry mole of measured flow.

$x_{Cproddry}$ = Amount of carbon products on a $C_1$ basis per dry mole of measured flow.

$x_{dil}$ = Fraction of dilution air in measured flow, assuming stoichiometric exhaust; or $x_{dil}$ = excess air for raw exhaust.

$x_{prod/intdry}$ = Amount of dry stoichiometric products per dry mole of intake air.

$x_{O2proddry}$ = Amount of oxygen products on an $O_2$ basis per dry mole of measured flow.

$x_{[emission]dry}$ = Amount of emission per dry mole of measured flow.

$x_{[emission]meas}$ = Amount of emission in measured flow.

$x_{H2O[emission]meas}$ = Amount of water at emission-detection location. Measure or estimate these values according to § 1065.145(d)(2).

$x_{H2Oint}$ = Amount of water in the intake air, based on a humidity measurement of intake air.

$x_{H2Odil}$ = Amount of water in dilution air, based on a humidity measurement of intake air.

$x_{O2airdry}$ = Amount of oxygen per dry mole of air. Use $x_{O2airdry}$= 0.209445 mol/mol.

$x_{CO2airdry}$ = Amount of carbon dioxide per dry mole of air. Use $x_{CO2airdry}$ = 375 mol/mol.

α = Atomic hydrogen-to-carbon ratio in fuel.

β = Atomic oxygen-to-carbon ratio in fuel.

(4) Use the following equations to iteratively solve for $x_{H2O}$ and $x_{Cproddry}$:

$$x_{H2O} = \frac{x_{H2Odry}}{1 + x_{H2Odry}} \qquad \text{Eq. 1065.655-1}$$

$$x_{H2Odry} = \frac{\alpha}{2} \cdot x_{Cproddry} + \left(1 - x_{dil}\right) \cdot \frac{x_{H2Ointdry}}{x_{prod/intdry}} + x_{dil} \cdot x_{H2Odildry} \qquad \text{Eq. 1065.655-2}$$

$$x_{Cproddry} = x_{CO2dry} + x_{COdry} + x_{THCdry} \qquad \text{Eq. 1065.655-3}$$

$$x_{dil} = 1 - \frac{x_{O2proddry} \cdot x_{prod/intdry}}{x_{O2airdry}} \cdot \left(1 + x_{H2Ointdry}\right) \qquad \text{Eq. 1065.655-4}$$

$$x_{prod/intdry} = \frac{1}{1 - \frac{1}{1 - x_{dil}} \cdot \frac{1}{2} \cdot \left(x_{COdry} - \frac{\alpha}{2} \cdot x_{Cproddry} - x_{NO2dry}\right)} \qquad \text{Eq. 1065.655-5}$$

$$x_{O2proddry} = x_{CO2dry} + \frac{1}{2} \cdot \left(x_{COdry} + \frac{\alpha}{2} \cdot x_{Cproddry} + x_{NOdry}\right) + x_{NO2dry} - \beta \cdot x_{Cproddry} \qquad \text{Eq. 1065.655-6}$$

$$x_{CO2dry} = \frac{x_{CO2meas}}{1 - x_{H2OCO2meas}} - \frac{x_{CO2airdry}}{1 - \frac{1}{2} \cdot \left(x_{COdry} - \frac{\alpha}{2} \cdot x_{Cproddry} - x_{NO2dry}\right)} \qquad \text{Eq. 1065.655-7}$$

$$x_{COdry} = \frac{x_{COmeas}}{1 - x_{H2OxCOmeas}} \qquad \text{Eq. 1065.655-8}$$

$$x_{THCdry} = \frac{x_{THCmeas}}{1 - x_{H2OxTHCmeas}} \qquad \text{Eq. 1065.655-9}$$

$$x_{H2Ointdry} = \frac{x_{H2Oint}}{1 - x_{H2Oint}} \qquad \text{Eq. 1065.655-10}$$

$$x_{H2Odildry} = \frac{x_{H2Odil}}{1 - x_{H2Odil}} \qquad \text{Eq. 1065.655-11}$$

$$x_{NO2dry} = \frac{x_{NO2meas}}{1 - x_{H2OxNO2meas}} \qquad \text{Eq. 1065.655-12}$$

$$x_{NOdry} = \frac{x_{NOmeas}}{1 - x_{H2OxNOmeas}} \qquad \text{Eq. 1065.655-13}$$

(5) The following example is a solution for $x_{H2O}$ and $x_{Cproddry}$ using the equations in paragraph (c)(4) of this section:

$$x_{H2O} = \frac{35.24}{1 + \frac{35.24}{1000}} = 34.04 \text{ mmol/mol}$$

$$x_{H2Odry} = \frac{1.8}{2} \cdot 24.69 + (1 - 0.843) \cdot \frac{17.22}{0.9338} + 0.843 \cdot 12.01 = 35.24 \text{ mmol/mol}$$

$$x_{Cproddry} = 24.614 + \frac{29.3}{1000} + \frac{47.6}{1000} = 24.69 \text{ mmol/mol}$$

$$x_{dil} = 1 - \frac{\frac{34.54}{1000} \cdot 0.9338}{0.209445} \cdot \left(1 + \frac{17.22}{1000}\right) = 0.843$$

$$x_{prod/intdry} = \frac{1}{1 - \frac{1}{1 - 0.843} \cdot \frac{1}{2} \cdot \left(\frac{29.3}{1000000} - \frac{1.8}{2} \cdot \frac{24.69}{1000} - \frac{12.1}{1000000}\right)} = 0.9338 \text{ mol/mol}$$

$$x_{O2prod/intdry} = 24.614 + \frac{1}{2} \cdot \left(\frac{29.3}{1000} + \frac{1.8}{2} \cdot 24.69 + \frac{50.4}{1000}\right) + \frac{12.1}{1000} - 0.05 \cdot 24.69 = 34.54 \text{ mol/mol}$$

$$x_{CO2dry} = \frac{24.770}{1 - \frac{8.601}{1000}} - \frac{\frac{375}{1000}}{1 - \frac{1}{2} \cdot \left(\frac{29.3}{1000000} - \frac{1.8}{2} \cdot \frac{24.69}{1000} - \frac{12.1}{1000000}\right)} = 24.614 \text{ mmol/mol}$$

$$x_{COdry} = \frac{29.0}{1 - \frac{8.601}{1000}} = 29.3\ \mu mol/mol$$

$$x_{H2Ointdry} = \frac{16.93}{1 - \frac{16.93}{1000}} = 17.22\ mmol/mol$$

$$x_{NO2dry} = \frac{12.0}{1 - \frac{8.601}{1000}} = 12.1\ \mu mol/mol$$

$$x_{THCdry} = \frac{46}{1 - \frac{34.04}{1000}} = 47.6\ \mu mol/mol$$

$$x_{H2Odildry} = \frac{11.87}{1 - \frac{11.87}{1000}} = 12.01\ mmol/mol$$

$$x_{NOdry} = \frac{50.0}{1 - \frac{8.601}{1000}} = 50.4\ \mu mol/mol$$

$x_{O2airdry}$ = 0.209445 mol/mol
$x_{CO2airdry}$ = 375 mol/mol
$\alpha$ = 1.8
$\beta$ = 0.05

TABLE 1 OF § 1065.655.—DEFAULT VALUES OF ATOMIC HYDROGEN-TO-CARBON RATIO, $\alpha$, ATOMIC OXYGEN-TO-CARBON RATIO, $\beta$ AND CARBON MASS FRACTION OF FUEL, $W_C$, FOR VARIOUS FUELS

| Fuel | Atomic hydrogen and oxygen-to-carbon ratios $CH\alpha\ O\beta$ | Carbon mass concentration, $w_C$ g/g |
|---|---|---|
| Gasoline | $CH_{1.85}O_0$ | 0.866 |
| #2 Diesel | $CH_{1.80}O_0$ | 0.869 |
| #1 Diesel | $CH_{1.93}O_0$ | 0.861 |
| Liquified Petroleum Gas | $CH_{2.64}O_0$ | 0.819 |
| Natural gas | $CH_{3.78}O_{0.016}$ | 0.747 |
| Ethanol | $CH_3O_{0.5}$ | 0.521 |
| Methanol | $CH_4O_1$ | 0.375 |

(d) *Calculated raw exhaust molar flow rate from measured intake air molar flow rate or fuel mass flow rate.* You may calculate the raw exhaust molar flow rate from which you sampled emissions, $\dot{n}_{exh}$, based on the measured intake air molarflow rate, $\dot{n}_{int}$, or the measured fuel mass flow rate, $\dot{m}_{fuel}$, and the values calculated using the chemical balance in paragraph (c) of this section. Solve for the chemical balance in paragraph (c) of this section at the same frequency that you update and record $\dot{n}_{int}$ or $\dot{m}_{fuel}$.

(1) *Crankcase flow rate.* You may calculate raw exhaust flow based on $\dot{n}_{int}$ or $\dot{m}_{fuel}$ only if at least one of the following is true about your crankcase emission flow rate:

(i) Your test engine has a production emission-control system with a closed crankcase that routes crankcase flow back to the intake air, downstream of your intake air flow meter.

(ii) During emission testing you route open crankcase flow to the exhaust according to § 1065.130(g).

(iii) You measure open crankcase emissions and flow, and you add the masses of crankcase emissions to your brake-specific emission calculations.

(iv) Using emission data or an engineering analysis, you can show that neglecting the flow rate of open crankcase emissions does not adversely affect your ability to demonstrate compliance with the applicable standards.

(2) *Intake air molar flow rate calculation.* Based on $\dot{n}_{int}$, calculate $\dot{n}_{exh}$ as follows:

$$\dot{n}_{exh} = \left[\dot{n}_{int} \cdot \left(1 - x_{H20\,int}\right) \cdot x_{prod/intdry} \cdot \left(1 + x_{H20dry}\right)\right] \cdot \left[1 + \frac{x_{dil}}{1 - x_{dil}}\right] \qquad \text{Eq. } 1065.655-14$$

Where:
$\dot{n}_{exh}$ = raw exhaust molar flow rate from which you measured emissions.
$\dot{n}_{int}$ = intake air molar flow rate including humidity in intake air.

Example:

$\dot{n}_{int}$ = 3.780 mol/s

$x_{H20int}$ = 16.930 mmol/mol = 0.016930 mol/mol

$x_{prod/intdry}$ = 0.93382 mol/mol

$x_{H20dry}$ = 130.16 mmol/mol = 0.13016 mol/mol

$x_{dil}$ = 0.20278 mol/mol

$$\dot{n}_{exh} = \left[3.780 \cdot (1 - 0.016930) \cdot 0.93382 \cdot (1 + 0.13016)\right] \cdot \left[1 + \frac{0.20278}{1 - 0.20278}\right]$$

$\dot{n}_{exh}$ =4.919 mol/s

(3) *Fuel mass flow rate calculation.* Based on $\dot{m}_{fuel}$, calculate $\dot{n}_{exh}$ as follows:

$$\dot{n}_{exh} = \frac{\dot{m}_{fuel} \cdot w_c}{M_c \cdot x_{Cproddry}} \cdot \left(1 + x_{H20dry}\right) \cdot \left[1 + \frac{x_{dil}}{1 - x_{dil}}\right] \quad \text{Eq. } 1065.655-15$$

Where:

$\dot{n}_{exh}$= raw exhaust molar flow rate from which you measured emissions.

$\dot{m}_{fuel}$= intake air molar flow rate including humidity in intake air.

Example:

$\dot{m}_{fuel}$= 6.023 g/s

$w_C$ = 0.869 g/g

$M_C$ = 12.0107 g/mol

$x_{Cproddry}$ = 125.58 mmol/mol = 0.12558 mol/mol

$x_{H20dry}$ = 130.16 mmol/mol = 0.13016 mol/mol

$x_{dil}$ = 0.20278 mol/mol

$$\dot{n}_{exh} = \frac{6.0233 \cdot 0.869}{12.0107 \cdot 0.12558} \cdot (1 + 0.13016) \cdot \left[1 + \frac{0.20278}{1 - 0.20278}\right]$$

$\dot{n}_{exh}$ = 4.919 mol/s

**§ 1065.659 Removed water correction.**

(a) If you remove water upstream of a concentration measurement, x, or upstream of a flow measurement, n, correct for the removed water. Perform this correction based on the amount of water at the concentration measurement, $x_{H2O[emission]meas}$, and at the flow meter, $x_{H2O}$, whose flow is used to determine the concentration's total mass over a test interval.

(b) Downstream of where you removed water, you may determine the amount of water remaining by any of the following:

(1) Measure the dewpoint and absolute pressure downstream of the water removal location and calculate the amount of water remaining as described in § 1065.645.

(2) When saturated water vapor conditions exist at a given location, you may use the measured temperature at that location as the dewpoint for the downstream flow. If we ask, you must demonstrate how you know that saturated water vapor conditions exist. Use good engineering judgment to measure the temperature at the appropriate location to accurately reflect the dewpoint of the flow.

(3) You may also use a nominal value of absolute pressure based on an alarm setpoint, a pressure regulator setpoint, or good engineering judgment.

(c) For a corresponding concentration or flow measurement where you did not remove water, you may determine the amount of initial water by any of the following:

(1) Use any of the techniques described in paragraph (b) of this section.

(2) If the measurement comes from raw exhaust, you may determine the amount of water based on intake-air humidity, plus a chemical balance of fuel, intake air and exhaust as described in § 1065.655.

(3) If the measurement comes from diluted exhaust, you may determine the amount of water based on intake-air humidity, dilution air humidity, and a chemical balance of fuel, intake air, and exhaust as described in § 1065.655.

(d) Perform a removed water correction to the concentration measurement using the following equation:

$$x = x_{[emission]meas} \cdot \left[\frac{1 - x_{H2O}}{1 - x_{H2O[emission]meas}}\right] \quad \text{Eq. } 1065.659\text{-}1$$

*Example:*

$x_{COmeas}$ = 29.0 µmol/mol

$x_{H2OxCOmeas}$ = 8.601 mmol/mol = 0.008601 mol/mol

$x_{H2O}$ = 34.04 mmol/mol = 0.03404 mol/mol

$$x_{CO} = 29.0 \cdot \left[\frac{1 - 0.03404}{1 - 0.008601}\right]$$

$x_{CO}$ = 28.3 µmol/mol

**§ 1065.660 THC and NMHC determination.**

(a) *THC determination.* If we require you to determine THC emissions, calculate $x_{THC}$ using the initial THC contamination concentration $x_{THCinit}$ from § 1065.520 as follows:

$$x_{THCcor} = x_{THCuncor} - x_{THCinit} \quad \text{Eq. } 1065.660\text{-}1$$

*Example:*

$x_{THCuncor}$ = 150.3 µmol/mol

$x_{THCinit}$ = 1.1 µmol/mol

$x_{THCcor}$ = 150.3 − 1.1

$x_{THCcor}$ = 149.2 µmol/mol

(b) *NMHC determination.* Use one of the following to determine NMHC emissions, $x_{NMHC}$.

(1) Report $x_{NMHC}$ as 0.98 • $x_{THC}$ if you did not measure $CH_4$, or if the result of paragraph (b)(2) or (3) of this section is greater than the result using this paragraph (b)(1).

(2) For nonmethane cutters, calculate $x_{NMHC}$ using the nonmethane cutter's penetration fractions (PF) of $CH_4$ and $C_2H_6$ from § 1065.365, and using the initial NMHC contamination concentration $x_{NMHCinit}$ from § 1065.520 as follows:

$$x_{NMHC} = \frac{PF_{CH4} \cdot x_{THC} - RF_{CH4} \cdot x_{CH4}}{PF_{CH4} - PF_{C2H6}} - x_{NMHCinit} \qquad \text{Eq. 1065.660-2}$$

Where:

$x_{NMHC}$ = concentration of NMHC.

$PF_{CH4}$ = nonmethane cutter $CH_4$ penetration fraction, according to § 1065.365.

$x_{THC}$ = concentration of THC, as measured by the THC FID.

$RF_{CH4}$ = response factor of THC FID to $CH_4$, according to § 1065.360.

$x_{CH4}$ = concentration of methane, as measured downstream of the nonmethane cutter.

$PF_{C2H6}$ = nonmethane cutter $CH_4$ penetration fraction, according to § 1065.365.

$x_{NMHCinit}$ = initial NMHC contamination concentration, according to § 1065.520.

*Example:*

$PF_{CH4}$ = 0.990

$x_{THC}$ = 150.3 μmol/mol

$RF_{CH4}$ = 1.05

$x_{CH4}$ = 20.5 μmol/mol

$PF_{C2H6}$ = 0.020

$x_{NMHCinit}$ = 1.1 μmol/mol

$$x_{NMHC} = \frac{0.990 \cdot 150.3 - 1.05 \cdot 20.5}{0.990 - 0.020} - 1.1$$

$x_{NMHC}$ = 130.1 μmol/mol

(3) For a gas chromatograph, calculate $x_{NMHC}$ using the THC analyzer's response factor (RF) for $CH_4$, from § 1065.360, and using the initial NMHC contamination concentration $x_{NMHCinit}$ from § 1065.520 as follows:

$$x_{NMHC} = x_{THC} - RF_{CH4} \cdot x_{CH4} - x_{NMHCinit} \qquad \text{Eq. 1065.660-3}$$

*Example:*

$x_{THC}$ = 145.6 μmol/mol

$RF_{CH4}$ = 0.970

$x_{CH4}$ = 18.9 μmol/mol

$x_{NMHCinit}$ = 1.1 μmol/mol

$x_{NMHC}$ = 145.6 − 0.970 · 18.9 − 1.1

$x_{NMHC}$ = 126.2 μmol/mol

**§ 1065.665 THCE and NMHCE determination.**

(a) If you measured an oxygenated hydrocarbon's mass concentration (per mole of exhaust), first calculate its molar concentration by dividing its mass concentration by the effective molar mass of the oxygenated hydrocarbon, then multiply each oxygenated hydrocarbon's molar concentration by its respective number of carbon atoms per molecule. Add these $C_1$-equivalent molar concentrations to the molar concentration of NOTHC. The result is the molar concentration of THCE. Calculate THCE concentration using the following equations:

$$x_{THCE} = x_{NOTHC} + \sum_{i=1}^{N} x_{OHC_i} - x_{THCEinit} \qquad \text{Eq. 1065.665-1}$$

$$x_{NOTHC} = x_{THC} - \sum_{i=1}^{N} \left( x_{OHCi} \cdot RF_{OHCi} \cdot C^{\#} \right) \qquad \text{Eq. 1065.665-2}$$

$$x_{OHCi} = \frac{M_{exhOHCi} \cdot m_{dexhOHC}}{M_{OHCi} \cdot m_{dexh}} = \frac{n_{dexhOHC}}{n_{dexh}} \qquad \text{Eq. 1065.665-3}$$

Where:

$x_{OHCi}$ = The $C_1$-equivalent concentration of oxygenated species i in diluted exhaust.

$x_{THC}$ = The $C_1$-equivalent FID response to NOTHC and all OHC in diluted exhaust.

$RF_{OHCi}$ = The response factor of the FID to species i relative to propane on a $C_1$-equivalent basis.

$C^{\#}$ = the mean number of carbon atoms in the particular compound.

(b) If we require you to determine NMHCE, use the following equation:

$$x_{NMHCE} = x_{THCE} - x_{CH4} \cdot RF_{CH4} \qquad \text{Eq. 1065.665-4}$$

(c) The following example shows how to determine NMHCE emissions based on ethanol ($C_2H_5OH$) and methanol ($CH_3OH$) molar concentrations, and acetaldehyde ($C_2H_4O$) and formaldehyde (HCHO) as mass concentrations:

$x_{NMHC}$ = 127.3 μmol/mol

$x_{C2H5OH}$ = 100.8 μmol/mol

$x_{CH3OH}$ = 25.5 μmol/mol

$M_{exhC2H4O}$ = 0.841 mg/mol

$M_{exhHCHO}$ = 39.0 μg/mol

$M_{C2H4O}$ = 44.05256 g/mol

$M_{HCHO}$ = 30.02598 g/mol

$x_{C2H4O}$ = 0.841/44.05256 · 1000

$x_{C2H4O}$ = 19.1 μmol/mol

$x_{HCHO}$ = 39/30.02598

$x_{HCHO}$ = 1.3 μmol/mol

$x_{NMHCE}$ = 127.3 + 2 · 100.8 + 25.5 + 2 · 19.1 + 1.3

$x_{NMHCE}$ = 393.9 μmol/mol

**§ 1065.667 Dilution air background emission correction.**

(a) To determine the mass of background emissions to subtract from a diluted exhaust sample, first determine the total flow of dilution air, $n_{dil}$, over the test interval. This may be a measured quantity or a quantity calculated from the diluted exhaust flow and the flow-weighted mean fraction of

dilution air in diluted exhaust, $\bar{x}_{dil}$. Multiply the total flow of dilution air by the mean concentration of a background emission. This may be a time-weighted mean or a flow-weighted mean (*e.g.*, a proportionally sampled background). The product of $n_{dil}$ and the mean concentration of a background emission is the total amount of a background emission. If this is a molar quantity, convert it to a mass by multiplying it by its molar mass, M. The result is the mass of the background emission, m. In the case of PM, where the mean PM concentration is already in units of mass per mole of sample, $\bar{M}_{PM}$, multiply it by the total amount of dilution air, and the result is the total background mass of PM, $m_{PM}$. Subtract total background masses from total mass to correct for background emissions.

(b) You may determine the total flow of dilution air by a direct flow measurement. In this case, calculate the total mass of background as described in § 1065.650(b), using the dilution air flow, $n_{dil}$ . Subtract the background mass from the total mass. Use the result in brake-specific emission calculations.

(c) You may determine the total flow of dilution air from the total flow of diluted exhaust and a chemical balance of the fuel, intake air, and exhaust as described in § 1065.655. In this case, calculate the total mass of background as described in § 1065.650(b), using the total flow of diluted exhaust, $n_{dexh}$, then multiply this result by the flow-weighted mean fraction of dilution air in diluted exhaust, $\bar{x}_{dil}$. Calculate $\bar{x}_{dil}$ using flow-weighted mean concentrations of emissions in the chemical balance, as described in § 1065.655. You may assume that your engine operates stoichiometrically, even if it is a lean-burn engine, such as a compression-ignition engine. Note that for lean-burn engines this assumption could result in an error in emission calculations. This error could occur because the chemical balances in § 1065.655 correct excess air passing through a lean-burn engine as if it was dilution air. If an emission concentration expected at the standard is about 100 times its dilution air background concentration, this error is negligible. However, if an emission concentration expected at the standard is similar to its background concentration, this error could be significant. If this error might affect your ability to show that your engines comply with applicable standards, we recommend that you remove background emissions from dilution air by HEPA filtration, chemical adsorption, or catalytic scrubbing. You might also consider using a partial-flow dilution technique such as a bag mini-diluter, which uses purified air as the dilution air.

(d) The following is an example of using the flow-weighted mean fraction of dilution air in diluted exhaust, $\bar{x}_{dil}$, and the total mass of background emissions calculated using the total flow of diluted exhaust, $n_{dexh}$, as described in § 1065.650(b) :

$$m_{bkgnd} = \bar{x}_{dil} \cdot m_{bkgnddexh} \qquad \text{Eq. 1065.667-1}$$

$$m_{bkgnddexh} = M \cdot \bar{x}_{bkgnd} \cdot n_{dexh} \qquad \text{Eq. 1065.667-2}$$

*Example:*

$M_{NOx}$ = 46.0055 g/mol

$\bar{x}_{bkgnd}$ = 0.05 μmol/mol = $0.05 \cdot 10^{-6}$ mol/mol

$n_{dexh}$ = 23280.5 mol

$\bar{x}_{dil}$ = 0.843

$m_{bkgndNOxdexh} = 46.0055 \cdot 0.05 \cdot 10^{-6} \cdot 23280.5$

$m_{bkgndNOxdexh}$ = 0.0536 g

$m_{bkgndNOx} = 0.843 \cdot 0.0536$

$m_{bkgndNOx}$ = 0.0452 g

**§ 1065.670 $NO_X$ intake-air humidity and temperature corrections.**

See the standard-setting part to determine if you may correct $NO_X$ emissions for the effects of intake-air humidity or temperature. Use the $NO_X$ intake-air humidity andtemperature corrections specified in the standard-setting part instead of the $NO_X$ intake-air humidity correction specified in this part 1065. If the standard-setting part allows correcting $NO_X$ emissions for intake-air humidity according to this part 1065, first apply any $NO_X$ corrections for background emissions and water removal from the exhaust sample, then correct $NO_X$ concentrations for intake-air humidity using one of the following approaches:

(a) Correct for intake-air humidity using the following equation:

$$x_{NOxcor} = x_{NOxuncor} \cdot (9.953 \cdot x_{H2O} + 0.832) \qquad \text{Eq. 1065.670-1}$$

*Example:*

$x_{NOxuncor}$ = 700.5 μmol/mol

$x_{H2O}$ = 0.022 mol/mol

$x_{NOxcor} = 700.5 \cdot (9.953 \cdot 0.022 + 0.832)$

$x_{NOxcor}$ = 736.2 μmol/mol

(b) Develop your own correction, based on good engineering judgment.

**§ 1065.672 Drift correction.**

(a) *Scope and frequency.* Perform the calculations in this section to determine if gas analyzer drift invalidates the results of a test interval. If drift does not invalidate the results of a test interval, correct that test interval's gas analyzer responses for drift according to this section. Use the drift-corrected gas analyzer responses in all subsequent emission calculations. Note that the acceptable threshold for gas analyzer drift over a test interval is specified in § 1065.550 for both laboratory testing and field testing.

(b) *Correction principles.* The calculations in this section utilize a gas analyzer's responses to reference zero and span concentrations of analytical gases, as determined sometime before and after a test interval. The calculations correct the gas analyzer's responses that were recorded during a test interval. The correction is based on an analyzer's mean responses to reference zero and span gases, and it is based on the reference concentrations of the zero and span gases themselves. Validate and correct for drift as follows:

(c) *Drift validation.* After applying all the other corrections–except drift correction–to all the gas analyzer signals, calculate brake-specific emissions according to § 1065.650. Then correct all gas analyzer signals for drift according to this section. Recalculate brake-specific emissions using all of the drift-corrected gas analyzer signals. Validate and report the brake-specific

emission results before and after drift correction according to § 1065.550.

(d) *Drift correction.* Correct all gas analyzer signals as follows:

(1) Correct each recorded concentration, $x_i$, for continuous sampling or for batch sampling, $\bar{x}$.

(2) Correct for drift using the following equation:

$$x_{idrift\ corrected} = x_{refzero} + \frac{2 \cdot x_{refspan}}{x_{prespan} + x_{postspan}} \cdot \left( x_i - \frac{x_{prezero} + x_{postzero}}{2} \right) \qquad \text{Eq. 1065.672-1}$$

Where:

$x_{idriftcorrected}$ = concentration corrected for drift.

$x_{refzero}$ = reference concentration of the zero gas, which is usually zero unless known to be otherwise.

$x_{refspan}$ = reference concentration of the span gas.

$x_{prespan}$ = pre-test interval gas analyzer response to the span gas concentration.

$x_{postspan}$ = post-test interval gas analyzer response to the span gas concentration.

$x_i$ or $\bar{x}$ = concentration recorded during test, before drift correction.

$x_{prezero}$ = pre-test interval gas analyzer response to the zero gas concentration.

$x_{postzero}$ = post-test interval gas analyzer response to the zero gas concentration.

*Example:*

$x_{refzero}$ = 0 µmol/mol

$x_{refspan}$ = 1800.0 µmol/mol

$x_{prespan}$ = 1800.5 µmol/mol

$x_{postspan}$ = 1695.8 µmol/mol

$x_i$ or $\bar{x}$ = 435.5 µmol/mol

$x_{prezero}$ = 0.6 µmol/mol

$x_{postzero}$ = −5.2 µmol/mol

$$x_{idrift\ corrected} = 0 + \frac{2 \cdot 1800.0}{1800.5 + 1695.8} \cdot \left( 435.5 - \frac{0.6 + (-5.2)}{2} \right)$$

$x_{idriftcorrected}$ = 450.8 µmol/mol

(3) For any pre-test interval concentrations, use concentrations determined most recently before the test interval. For some test intervals, the most recent pre-zero or pre-span might have occurred before one or more previous test intervals.

(4) For any post-test interval concentrations, use concentrations determined most recently after the test interval. For some test intervals, the most recent post-zero or post-span might have occurred after one or more subsequent test intervals.

(5) If you do not record any pre-test interval analyzer response to the span gas concentration, $x_{prespan}$, set $x_{prespan}$ equal to the reference concentration of the span gas:

$x_{prespan} = x_{refspan}$.

(6) If you do not record any pre-test interval analyzer response to the zero gas concentration, $x_{prezero}$, set $x_{prezero}$ equal to the reference concentration of the zero gas:

$x_{prezero} = x_{refzero}$.

(7) Usually the reference concentration of the zero gas, $x_{refzero}$, is zero: $x_{refzero}$ = 0 µmol/mol. However, in some cases you might you know that $x_{refzero}$ has a non-zero concentration. For example, if you zero a $CO_2$ analyzer using ambient air, you may use the default ambient air concentration of $CO_2$, which is 375 µmol/mol. In this case, $x_{refzero}$ = 375 µmol/mol. Note that when you zero an analyzer using a non-zero $x_{refzero}$, you must set the analyzer to output the actual $x_{refzero}$ concentration. For example, if $x_{refzero}$ = 375 µmol/mol, set the analyzer to output a value of 375 µmol/mol when the zero gas is flowing to the analyzer.

**§ 1065.675 CLD quench verification calculations.**

Perform CLD quench-check calculations as follows:

(a) Calculate the amount of water in the span gas, $x_{H2Ospan}$, assuming complete saturation at the span-gas temperature.

(b) Estimate the expected amount of water and $CO_2$ in the exhaust you sample, $x_{H2Oexp}$ and $x_{CO2exp}$, respectively, by considering the maximum expected amounts of water in combustion air, fuel combustion products, and dilution air concentrations (if applicable).

(c) Calculate water quench as follows:

$$quench = \left( \frac{x_{NOwet} / (1 - x_{H2Omeas})}{x_{NOdry}} - 1 \right) \cdot \frac{x_{H2Oexp}}{x_{H2Omeas}} + \frac{x_{NO,CO2} - x_{NO,N2}}{x_{NO,N2}} \cdot \frac{x_{CO2exp}}{x_{CO2meas}} \qquad \text{Eq. 1065.672-1}$$

Where:

quench = amount of CLD quench.

$x_{NOdry}$ = measured concentration of NO upstream of a bubbler, according to § 1065.370.

$x_{NOwet}$ = measured concentration of NO downstream of a bubbler, according to § 1065.370.

$x_{H2Oexp}$ = expected maximum amount of water entering the CLD sample port during emission testing.

$x_{H2Omeas}$ = measured amount of water entering the CLD sample port during the quench verification specified in § 1065.370.

$x_{NO,CO2}$ = measured concentration of NO when NO span gas is blended with

$CO_2$ span gas, according to § 1065.370.

$x_{NO,N2}$ = measured concentration of NO when NO span gas is blended with N2 span gas, according to § 1065.370.

$x_{CO2exp}$ = expected maximum amount of $CO_2$ entering the CLD sample port during emission testing.

$x_{CO2meas}$ = measured amount of $CO_2$ entering the CLD sample port during the quench verification specified in § 1065.370.

*Example:*

$x_{NOdry}$ = 1800.0 μmol/mol
$x_{NOwet}$ = 1760.5 μmol/mol
$x_{H2Oexp}$ = 0.030 mol/mol
$x_{H2Omeas}$ = 0.017 mol/mol
$x_{NO,CO2}$ = 1480.2 μmol/mol
$x_{NO,N2}$ = 1500.8 μmol/mol
$x_{CO2exp}$ = 2.00%
$x_{CO2meas}$ = 3.00%

$$\text{quench} = \left(\frac{1760.5/(1-0.017)}{1800.0} - 1\right) \cdot \frac{0.030}{0.017} + \frac{1480.2 - 1500.8}{1500.8} \cdot \frac{200}{300}$$

quench = −0.00888 − 0.00915 = −1.80%

**§ 1065.690 Buoyancy correction for PM sample media.**

(a) *General.* Correct PM sample media for their buoyancy in air if you weigh them on a balance. The buoyancy correction depends on the sample media density, the density of air, and the density of the calibration weight used to calibrate the balance. The buoyancy correction does not account for the buoyancy of the PM itself, because the mass of PM typically accounts for only (0.01 to 0.10)% of the total weight. A correction to this small fraction of mass would be at the most 0.010%.

(b) *PM sample media density.* Different PM sample media have different densities. Use the known density of your sample media, or use one of the densities for some common sampling media, as follows:

(1) For PTFE-coated borosilicate glass, use a sample media density of 2300 kg/m³.

(2) For PTFE membrane (film) media with an integral support ring of polymethylpentene that accounts for 95% of the media mass, use a sample media density of 920 kg/m³.

(3) For PTFE membrane (film) media with an integral support ring of PTFE, use a sample media density of 2144 kg/m³.

(c) *Air density.* Because a PM balance environment must be tightly controlled to an ambient temperature of (22 ±1) °C and a dewpoint of (9.5 ±1) °C, air density is primarily function of atmospheric pressure. We therefore specify a buoyancy correction that is only a function of atmospheric pressure. Using good engineering judgment, you may develop and use your own buoyancy correction that includes the effects of temperature and dewpoint on density in addition to the effect of atmospheric pressure.

(d) *Calibration weight density.* Use the stated density of the material of your metal calibration weight. The example calculation in this section uses a density of 8000 kg/m³, but you should know the density of your weight from the calibration weight supplier or the balance manufacturer if it is an internal weight.

(e) *Correction calculation.* Correct the PM sample media for buoyancy using the following equations:

$$m_{cor} = m_{uncor} \cdot \left(\frac{1 - \frac{\rho_{air}}{\rho_{weight}}}{1 - \frac{\rho_{air}}{\rho_{media}}}\right) \qquad \text{Eq. 1065.690-1}$$

Where:
$m_{cor}$ = PM mass corrected for buoyancy.
$m_{uncor}$ = PM mass uncorrected for buoyance.
$\rho_{air}$ = density of air in balance environment.
$p_{weight}$ = density of calibration weight used to span balance.
$p_{media}$ = density of PM sample media, such as a filter.

$$\rho_{air} = \frac{\rho_{abs} \cdot M_{mix}}{R \cdot T_{amb}} \qquad \text{Eq. 1065.690-2}$$

Where:
$p_{abs}$ = absolute pressure in balance environment.
$M_{mix}$ = molar mass of air in balance environment.
R = molar gas constant.
$T_{amb}$ = absolute ambient temperature of balance environment.

*Example:*
$p_{abs}$ = 99.980 kPa
$T_{sat} = T_{dew}$ = 9.5 °C
Using Eq. 1065.645 − 2,
$p_{H20}$ = 1.1866 kPa
Using Eq. 1065.645 − 3,
$x_{H2O}$ = 0.011868 mol/mol
Using Eq. 1065.640 − 8,
$M_{mix}$ = 28.83563 g/mol
R = 8.314472 J/(mol·K)
$T_{amb}$ = 20 °C

$$\rho_{air} \frac{99.980 \cdot 28.83563}{8.314472 \cdot 293.15}$$

$p_{air}$ = 1.18282 kg/m³
$m_{uncorr}$ = 100.0000 mg
$p_{weight}$ = 8000 kg/m³
$p_{media}$ = 920 kg/m³

$$m_{cor} = 100.000 \cdot \left[\frac{1 - \frac{1.18282}{8000}}{1 - \frac{1.18282}{920}}\right]$$

$m_{cor}$ = 100.1139 mg

**§ 1065.695 Data requirements.**

(a) To determine the information we require from engine tests, refer to the standard-setting part and request from your Designated Compliance Officer the format used to apply for certification or demonstrate compliance. We may require different information for different purposes, such as for certification applications, approval requests for alternate procedures, selective enforcement audits, laboratory audits, production-line test reports, and field-test reports.

(b) See the standard-setting part and § 1065.25 regarding recordkeeping.

(c) We may ask you the following about your testing, and we may ask you for other information as allowed under the Act:

(1) What approved alternate procedures did you use? For example:
(i) Partial-flow dilution for proportional PM.
(ii) CARB test procedures.
(iii) ISO test procedures.
(2) What laboratory equipment did you use? For example, the make, model, and description of the following:
(i) Engine dynamometer and operator demand.
(ii) Probes, dilution, transfer lines, and sample preconditioning components.
(iii) Batch storage media (such as the bag material or PM filter material).
(3) What measurement instruments did you use? For example, the make, model, and description of the following:
(i) Speed and torque instruments.
(ii) Flow meters.
(iii) Gas analyzers.
(iv) PM balance.
(4) When did you conduct calibrations and performance checks and what were the results? For example, the dates and results of the following:
(i) Linearity checks.
(ii) Interference checks.
(iii) Response checks.
(iv) Leak checks.
(v) Flow meter checks.
(5) What engine did you test? For example, the following:
(i) Manufacturer.
(ii) Family name on engine label.
(iii) Model.
(iv) Model year.
(v) Identification number.
(6) How did you prepare and configure your engine for testing? Consider the following examples:
(i) Dates, hours, duty cycle and fuel used for service accumulation.
(ii) Dates and description of scheduled and unscheduled maintenance.
(iii) Allowable pressure range of intake restriction.
(iv) Allowable pressure range of exhaust restriction.
(v) Charge air cooler volume.
(vi) Charge air cooler outlet temperature, specified engine conditions and location of temperature measurement.
(vii) Fuel temperature and location of measurement.
(viii) Any aftertreatment system configuration and description.
(ix) Any crankcase ventilation configuration and description (e.g., open, closed, PCV, crankcase scavenged).
(7) How did you test your engine? For example:
(i) Constant speed or variable speed.
(ii) Mapping procedure (step or sweep).
(iii) Continuous or batch sampling for each emission.
(iv) Raw or dilute sampling; any dilution-air background sampling.
(v) Duty cycle and test intervals.
(vi) Cold-start, hot-start, warmed-up running.
(vii) Absolute pressure, temperature, and dewpoint of intake and dilution air.
(viii) Simulated engine loads, curb idle transmission torque value.
(ix) Warm-idle speed value and any enhanced-idle speed value.
(x) Simulated vehicle signals applied during testing.
(xi) Bypassed governor controls during testing.
(xii) Date, time, and location of test (*e.g.*, dynamometer laboratory identification).
(xiii) Cooling medium for engine and charge air.
(xiv) Operating temperatures of coolant, head, and block.
(xv) Natural or forced cool-down and cool-down time.
(xvi) Canister loading.
(8) How did you validate your testing? For example, results from the following:
(i) Duty cycle regression statistics for each test interval.
(ii) Proportional sampling.
(iii) Drift.
(iv) Reference PM sample media in PM-stabilization environment.
(9) How did you calculate results? For example, results from the following:
(i) Drift correction.
(ii) Noise correction.
(iii) ''Dry-to-wet'' correction.
(iv) NMHC, $CH_4$, and contamination correction.
(v) $NO_X$ humidity correction.
(vi) Brake-specific emission formulation—total mass divided by total work, mass rate divided by power, or ratio of mass to work.
(vii) Rounding emission results.
(10) What were the results of your testing? For example:
(i) Maximum mapped power and speed at maximum power.
(ii) Maximum mapped torque and speed at maximum torque.
(iii) For constant-speed engines: no-load governed speed.
(iv) For constant-speed engines: test torque.
(v) For variable-speed engines: maximum test speed.
(vi) Speed versus torque map.
(vii) Speed versus power map.
(viii) Brake-specific emissions over the duty cycle and each test interval.
(ix) Brake-specific fuel consumption.
(11) What fuel did you use? For example:
(i) Fuel that met specifications of subpart H of this part.
(ii) Alternate fuel.
(iii) Oxygenated fuel.
(12) How did you field test your engine? For example:
(i) Data from paragraphs (c)(1), (3), (4), (5), and (9) of this section.
(ii) Probes, dilution, transfer lines, and sample preconditioning components.
(iii) Batch storage media (such as the bag material or PM filter material).
(iv) Continuous or batch sampling for each emission.
(v) Raw or dilute sampling; any dilution air background sampling.
(vi) Cold-start, hot-start, warmed-up running.
(vii) Intake and dilution air absolute pressure, temperature, dewpoint.
(viii) Curb idle transmission torque value.
(ix) Warm idle speed value, any enhanced idle speed value.
(x) Date, time, and location of test (*e.g.*, identify the testing laboratory).
(xi) Proportional sampling validation.
(xii) Drift validation.
(xiii) Operating temperatures of coolant, head, and block.
(xiv) Vehicle make, model, model year, identification number.

## Subpart H—Engine Fluids, Test Fuels, Analytical Gases and Other Calibration Standards

### § 1065.701 General requirements for test fuels.

(a) *General.* For all emission measurements, use test fuels that meet the specifications in this subpart, unless the standard-setting part directs otherwise. Section 1065.10(c)(1) does not apply with respect to test fuels. Note that the standard-setting parts generally require that you design your emission controls to function properly when using commercially available fuels, even if they differ from the test fuel.

(b) *Fuels meeting alternate specifications.* We may allow you to use a different test fuel (such as California Phase 2 gasoline) if you show us that using it does not affect your ability to comply with all applicable emission standards using commercially available fuels.

(c) *Fuels not specified in this subpart.* If you produce engines that run on a type of fuel (or mixture of fuels) that we do not specify in this subpart, you must get our written approval to establish the appropriate test fuel. You must show us all the following things before we can specify a different test fuel for your engines:
(1) Show that this type of fuel is commercially available.
(2) Show that your engines will use only the designated fuel in service.

(3) Show that operating the engines on the fuel we specify would unrepresentatively increase emissions or decrease durability.

(d) *Fuel specifications.* The fuel parameters specified in this subpart depend on measurement procedures that are incorporated by reference. For any of these procedures, you may instead rely upon the procedures identified in 40 CFR part 80 for measuring the same parameter. For example, we may identify different reference procedures for measuring gasoline parameters in 40 CFR 80.46.

(e) *Service accumulation and field testing fuels.* If we do not specify a service-accumulation or field-testing fuel in the standard-setting part, use an appropriate commercially available fuel such as those meeting minimum ASTM specifications from the following table:

TABLE 1 OF § 1065.701.—SPECIFICATIONS FOR SERVICE-ACCUMULATION AND FIELD-TESTING FUELS

| Fuel type | Subcategory | ASTM specification [1] |
|---|---|---|
| Diesel | Light distillate and light blends with residual | D975–04c |
| | Middle distillate | D6751–03a |
| | Biodiesel (B100) | D6985–04a |
| Gasoline | Motor vehicle and minor oxygenate blends | D4814–04b |
| | Ethanol (Ed75–85) | D5798–99 |
| | Methanol (M70–M85) | D5797–96 |
| Aviation fuel | Aviation gasoline | D910–04a |
| | Gas turbine | D1655–04a |
| | Jet B wide cut | D6615–04a |
| Gas turbine fuel | General | D2880–03 |

[1] All ASTM specifications are incorporated by reference in § 1065.1010.

**§ 1065.703 Distillate diesel fuel.**

(a) Distillate diesel fuels for testing must be clean and bright, with pour and cloud points adequate for proper engine operation.

(b) There are three grades of #2 diesel fuel specified for use as a test fuel. See the standard-setting part to determine which grade to use. If the standard-setting part does not specify which grade to use, use good engineering judgment to select the grade that represents the fuel on which the engines will operate in use. The three grades are specified in Table 1 of this section.

(c) You may use the following nonmetallic additives with distillate diesel fuels:

(1) Cetane improver.
(2) Metal deactivator.
(3) Antioxidant, dehazer.
(4) Rust inhibitor.
(5) Pour depressant.
(6) Dye.
(7) Dispersant.
(8) Biocide.

TABLE 1 OF § 1065.703—TEST FUEL SPECIFICATIONS FOR DISTILLATE DIESEL FUEL

| Item | Units | Ultra low sulfur | Low sulfur | High sulfur | Reference procedure [1] |
|---|---|---|---|---|---|
| Cetane Number | | 40–50 | 40–50 | 40–50 | ASTM D 613–03b |
| Distillation range: | | | | | |
| Initial boiling point | °C | 171–204 | 171–204 | 171–204 | ASTM D 86–04b |
| 10 pct. point | | 204–238 | 204–238 | 204–238 | |
| 50 pct. point | 243–282 | 243–282 | 243–282 | | |
| 90 pct. point | 293–332 | 293–332 | 293–332 | | |
| Endpoint | 321–366 | 321–366 | 321–366 | | |
| Gravity | °API | 32–37 | 32–37 | 32–37 | ASTM D 287–92 |
| Total sulfur | mg/kg | 7–15 | 300–500 | 2000–4000 | ASTM D 2622–03 |
| Aromatics, minimum. (Remainder shall be paraffins, naphthalenes, and olefins). | g/kg | 100 | 100 | 100 | ASTM D 5186–03 |
| Flashpoint, min | °C | 54 | 54 | 54 | ASTM D 93–02a |
| Viscosity | cSt | 2.0–3.2 | 2.0–3.2 | 2.0–3.2 | ASTM D 445–04 |

[1] All ASTM procedures are incorporated by reference in § 1065.1010. See § 1065.701(d) for other allowed procedures.

**§ 1065.705 Residual fuel [Reserved]**

**§ 1065.710 Gasoline.**

(a) Gasoline for testing must have octane values that represent commercially available fuels for the appropriate application.

(b) There are two grades of gasoline specified for use as a test fuel. If the standard-setting part requires testing with fuel appropriate for low temperatures, use the test fuel specified for low-temperature testing. Otherwise, use the test fuel specified for general testing. The two grades are specified in Table 1 of this section.

TABLE 1 OF § 1065.710.—TEST FUEL SPECIFICATIONS FOR GASOLINE

| Item | Units | General testing | Low-temperature testing | Reference procedure [1] |
|---|---|---|---|---|
| Distillation Range: | | | | |
| Initial boiling point | °C | 24–35 [2] | 24–36 | ASTM D 86–04b |
| 10% point | do | 49–57 | 37–48. | |
| 50% point | do | 93–110 | 82–101. | |
| 90% point | do | 149–163 | 158–174. | |
| End point | do | Maximum, 213 | Maximum, 212. | |
| Hydrocarbon composition: | | | | |
| 1. Olefins | $mm^3/m^3$ | Maximum, 100,000 | Maximum, 175,000 | ASTM D 1319–03 |
| 2. Aromatics | do | Maximum, 350,000 | Maximum, 304,000. | |
| 3. Saturates | do | Remainder | Remainder. | |
| Lead (organic) | g/liter | Maximum, 0.013 | Maximum, 0.013 | ASTM D 3237–02 |
| Phosphorous | g/liter | Maximum, 0.0013 | Maximum, 0.005 | ASTM D 3231–02 |
| Total sulfur | mg/kg | Maximum, 80 | Maximum, 80 | ASTM D 1266–98 |
| Volatility (Reid Vapor Pressure) | kPa | 60.0–63.4 [2 3] | 77.2–81.4 | ASTM D 323–99a |

[1] All ASTM procedures are incorporated by reference in § 1065.1010. See § 1065.701(d) for other allowed procedures.
[2] For testing at altitudes above 1 219 m, the specified volatility range is (52 to 55) kPa and the specified initial boiling point range is (23.9 to 40.6) °C.
[3] For testing unrelated to evaporative emissions, the specified range is (55 to 63) kPa.

**§ 1065.715 Natural gas.**

(a) Natural gas for testing must meet the specifications in the following table:

TABLE 1 OF § 1065.715.—TEST FUEL SPECIFICATIONS FOR NATURAL GAS

| Item | Value[1] |
|---|---|
| 1. Methane, $CH_4$ | Minimum, 0.87 mol/mol. |
| 2. Ethane, $C_2H_6$ | Maximum, 0.055 mol/mol. |
| 3. Propane, $C_3H_8$ | Maximum, 0.012 mol/mol. |
| 4. Butane, $C_4H_{10}$ | Maximum, 0.0035 mol/mol. |
| 5. Pentane, $C_5H_{12}$ | Maximum, 0.0013 mol/mol. |
| 6. $C_6$ and higher | Maximum, 0.001 mol/mol. |
| 7. Oxygen | Maximum, 0.001 mol/mol. |
| 8. Inert gases (sum of $CO_2$ and $N_2$) | Maximum, 0.051 mol/mol. |

[1] All parameters are based on the reference procedures in ASTM D 1945–03 (incorporated by reference in §1065.1010). See §1065.701(d) for other allowed procedures.

(b) At ambient conditions, natural gas must have a distinctive odor detectable down to a concentration in air not more than one-fifth the lower flammable limit.

**§ 1065.720 Liquefied petroleum gas.**

(a) Liquefied petroleum gas for testing must meet the specifications in the following table:

TABLE 1 OF § 1065.720.—TEST FUEL SPECIFICATIONS FOR LIQUEFIED PETROLEUM GAS

| Item | Value | Reference Procedure[1] |
|---|---|---|
| 1. Propane, $C_3H_8$ | Minimum, 0.85 $m^3/m^3$ | ASTM D 2163–91 |
| 2. Vapor pressure at 38 °C | Maximum, 1400 kPa | ASTM D 1267–02 or 2598–02 [2] |
| 3. Volatility residue evaporated temperature, 35 °C) | Maximum, −38 °C | ASTM D 1837–02a |
| 4. Butanes | Maximum, 0.05 $m^3/m^3$ | ASTM D 2163–91 |
| 5. Butenes | Maximum, 0.02 $m^3/m^3$ | ASTM D 2163–91 |
| 6. Pentenes and heavier | Maximum, 0.005 $m^3/m^3$ | ASTM D 2163–91 |
| 7. Propene | Maximum, 0.1 $m^3/m^3$ | ASTM D 2163–91 |
| 8. Residual matter(residue on evap. of 100) ml oil stain observ.). | Maximum, 0.05 ml pass [3] | ASTM D 2158–04 |
| 9. Corrosion, copper strip | Maximum, No. 1 | ASTM D 1838–03 |
| 10. Sulfur | Maximum, 80 mg/kg | ASTM D 2784–98 |
| 11. Moisture content | pass | ASTM D 2713–91 |

[1] All ASTM procedures are incorporated by reference in § 1065.1010. See § 1065.701(d) for other allowed procedures.
[2] If these two test methods yield different results, use the results from ASTM D 1267–02.
[3] The test fuel must not yield a persistent oil ring when you add 0.3 ml of solvent residue mixture to a filter paper in 0.1 ml increments and examine it in daylight after two minutes.

(b) At ambient conditions, liquefied petroleum gas must have a distinctive odor detectable down to a concentration in air not more than one-fifth the lower flammable limit.

**§ 1065.740 Lubricants.**

(a) Use commercially available lubricating oil that represents the oil that will be used in your engine in use.

(b) You may use lubrication additives, up to the levels that the additive manufacturer recommends.

**§ 1065.745 Coolants.**

(a) You may use commercially available antifreeze mixtures or other coolants that will be used in your engine in use.

(b) For laboratory testing of liquid-cooled engines, you may use water with or without rust inhibitors.

(c) For coolants allowed in paragraphs (a) and (b) of this section, you may use rust inhibitors and additives required for lubricity, up to the levels that the additive manufacturer recommends.

**§ 1065.750 Analytical gases.**

Analytical gases must meet the accuracy and purity specifications of this section, unless you can show that other specifications would not affect your ability to show that your engines comply with all applicable emission standards.

(a) Subparts C, D, F, and J of this part refer to the following gas specifications:

(1) Use purified gases to zero measurement instruments and to blend with calibration gases. Use gases with contamination no higher than the highest of the following values in the gas cylinder or at the outlet of a zero-gas generator:

(i) 2% contamination, measured relative to the flow-weighted mean concentration expected at the standard. For example, if you would expect a flow-weighted CO concentration of 100.0 mmol/mol, then you would be allowed to use a zero gas with CO contamination less than or equal to 2.000 mmol/mol.

(ii) Contamination as specified in the following table:

TABLE 1 OF § 1065.750.—GENERAL SPECIFICATIONS FOR PURIFIED GASES

| Constituent | Purified air [1] | Purified $N_2$ [1] |
|---|---|---|
| THC ($C_1$ equivalent) | <0.05 µmol/mol | < 0.05 µmol/mol |
| CO | <1 µmol/mol | < 1 µmol/mol |
| $CO_2$ | < 10 µmol/mol | < 10 µmol/mol |
| $O_2$ | 0.205 to 0.215 mol/mol | < 2 µmol/mol |
| $NO_X$ | < 0.02 µmol/mol | < 0.02 µmol/mol |

[1] We do not require these levels of purity to be NIST-traceable.

(2) Use the following gases with a FID analyzer:

(i) *FID fuel.* Use FID fuel with an $H_2$ concentration of (0.400 ± 0.004) mol/mol, balance He. Make sure the mixture contains no more than 0.05 µmol/mol THC.

(ii) *FID burner air.* Use FID burner air that meets the specifications of purified air in paragraph (a)(1) of this section. For field testing, you may use ambient air.

(iii) *FID zero gas.* Zero flame-ionization detectors with purified gas that meets the specifications in paragraph (a)(1) of this section, except that the purified gas $O_2$ concentration may be any value. Note that FID zero balance gases may be any combination of purified air and purified nitrogen. We recommend FID analyzer zero gases that contain approximately the flow-weighted mean concentration of $O_2$ expected during testing.

(iv) *FID propane span gas.* Span and calibrate THC FID with span concentrations of propane, $C_3H_8$. Calibrate on a carbon number basis of one ($C_1$). For example, if you use a $C_3H_8$ span gas of concentration 200 µmol/mol, span a FID to respond with a value of 600 µmol/mol. Note that FID span balance gases may be any combination of purified air and purified nitrogen. We recommend FID analyzer span gases that contain approximately the flow-weighted mean concentration of $O_2$ expected during testing.

(v) *FID methane span gas.* If you always span and calibrate a $CH_4$ FID with a nonmethane cutter, then span and calibrate the FID with span concentrations of methane, $CH_4$. Calibrate on a carbon number basis of one ($C_1$). For example, if you use a $CH_4$ span gas of concentration 200 µmol/mol, span a FID to respond with a value of 200 µmol/mol. Note that FID span balance gases may be any combination of purified air and purified nitrogen. We recommend FID analyzer span gases that contain approximately the flow-weighted mean concentration of $O_2$ expected during testing.

(3) Use the following gas mixtures, with gases traceable within ± 1.0% of the NIST true value or other gas standards we approve:

(i) $CH_4$, balance purified synthetic air and/or $N_2$ (as applicable).

(ii) $C_2H_6$, balance purified synthetic air and/or $N_2$ (as applicable).

(iii) $C_3H_8$, balance purified synthetic air and/or $N_2$ (as applicable).

(iv) CO, balance purified $N_2$.

(v) $CO_2$, balance purified $N_2$.

(vi) NO, balance purified $N_2$.

(vii) $NO_2$, balance purified $N_2$.

(viii) $O_2$, balance purified $N_2$.

(ix) $C_3H_8$, CO, $CO_2$, NO, balance purified $N_2$.

(x) $C_3H_8$, $CH_4$, CO, $CO_2$, NO, balance purified $N_2$.

(4) You may use gases for species other than those listed in paragraph (a)(3) of thissection (such as methanol in air, which you may use to determine response factors), as long as they are traceable to within ±1.0 % of the NIST true value or other similar standards we approve, and meet the stability requirements of paragraph (b) of this section.

(5) You may generate your own calibration gases using a precision blending device, such as a gas divider, to dilute gases with purified N2 or purified synthetic air. If your gas dividers meet the specifications in § 1065.248, and the gases being blended meet the requirements of paragraphs (a)(1) and (3) of this section, the resulting blends are considered to meet the requirements of this paragraph (a).

(b) Record the concentration of any calibration gas standard and its expiration date specified by the gas supplier.

(1) Do not use any calibration gas standard after its expiration date, except as allowed by paragraph (b)(2) of this section.

(2) Calibration gases may be relabeled and used after their expiration date as follows:

(i) Alcohol/carbonyl calibration gases used to determine response factors according to subpart I of this part may be relabeled as specified in subpart I of this part.

(ii) Other gases may be relabeled and used after the expiration date only if we approve it in advance.

(c) Transfer gases from their source to analyzers using components that are dedicated to controlling and transferring only those gases. For example, do not use a regulator, valve, or transfer line for zero gas if those components were previously used to transfer a different gas mixture. We recommend that you label regulators, valves, and transfer lines to prevent contamination. Note that even small traces of a gas mixture in the dead volume of a regulator, valve, or transfer line can diffuse upstream into a high-pressure volume of gas, which would contaminate the entire high-pressure gas source, such as a compressed-gas cylinder.

(d) To maintain stability and purity of gas standards, use good engineering judgment and follow the gas standard supplier's recommendations for storing and handling zero, span, and calibration gases. For example, it may be necessary to store bottles of condensable gases in a heated environment.

**§ 1065.790 Mass standards.**

(a) *PM balance calibration weights.* Use PM balance calibration weights that are certified as NIST-traceable within 0.1 % uncertainty. Calibration weights may be certified by any calibration lab that maintains NIST-traceability. Make sure your lowest calibration weight has no greater than ten times the mass of an unused PM-sample medium.

(b) *Dynamometer calibration weights.* [Reserved]

## Subpart I—Testing With Oxygenated Fuels

**§ 1065.801 Applicability.**

(a) This subpart applies for testing with oxygenated fuels. Unless the standard-setting part specifies otherwise, the requirements of this subpart do not apply for fuels that contain less than 25% oxygenated compounds by volume. For example, you generally do not need to follow the requirements of this subpart for tests performed using a fuel containing 10% ethanol and 90% gasoline, but you must follow these requirements for tests performed using a fuel containing 85% ethanol and 15% gasoline.

(b) Section 1065.805 applies for all other testing that requires measurement of any alcohols or carbonyls.

(c) This subpart specifies sampling procedures and calculations that are different than those used for non-oxygenated fuels. All other test procedures of this part 1065 apply for testing with oxygenated fuels.

**§ 1065.805 Sampling system.**

(a) Proportionally dilute engine exhaust, and use batch sampling collect flow-weighted dilute samples of the applicable alcohols and carbonyls at a constant flow rate. You may not use raw sampling for alcohols and carbonyls.

(b) You may collect background samples for correcting dilution air for background concentrations of alcohols and carbonyls.

(c) Maintain sample temperatures within the dilution tunnel, probes, and sample lines less than 121 °C but high enough to prevent aqueous condensation up to the point where a sample is collected. The maximum temperature limit is intended to prevent chemical reaction of the alcohols and carbonyls. The lower temperature limit is intended to prevent loss of the alcohols and carbonyls by dissolution in condensed water. Use good engineering judgment to minimize the amount of time that the undiluted exhaust is outside this temperature range to the extent practical. We recommend that you minimize the length of exhaust tubing before dilution. Extended lengths of exhaust tubing may require preheating, insulation, and cooling fans to limit excursions outside this temperature range.

(d) You may bubble a sample of the exhaust through water to collect alcohols for later analysis. You may also use a photo-acoustic analyzer to quantify ethanol and methanol in an exhaust sample.

(e) Sample the exhaust through cartridges impregnated with 2,4-dinitrophenylhydrazine to collect carbonyls for later analysis. If the standard-setting part specifies a duty cycle that has multiple test intervals (such as multiple engine starts or an engine-off soak phase), you may proportionally collect a single carbonyl sample for the entire duty cycle.For example, if the standard-setting part specifies a six-to-one weighting of hot-start to cold-start emissions, you may collect a single carbonyl sample for the entire duty cycle by using a hot-start sample flow rate that is six times the cold-start sample flow rate.

(f) You may sample alcohols or carbonyls using ''California Non-Methane Organic Gas Test Procedures'' (incorporated by reference in § 1065.1010). If you use this method, follow its calculations to determine the mass of the alcohol/carbonyl in the exhaust sample, but follow subpart G of this part for all other calculations.

(g) Use good engineering judgment to sample other oxygenated hydrocarbon compounds in the exhaust.

**§ 1065.845 Response factor determination.**

Since FID analyzers generally have an incomplete response to alcohols and carbonyls, determine each FID analyzer's alcohol/carbonyl response factor (such as $RF_{MeOH}$) after FID optimization. Formaldehyde response is assumed to be zero and does not need to be determined. Use the most recent alcohol/carbonyl response factors to compensate for alcohol/carbonyl response.

(a) Determine the alcohol/carbonyl response factors as follows:

(1) Select a $C_3H_8$ span gas that meets the specifications of § 1065.750. Note that FID zero and span balance gases may be any combination of purified air or purified nitrogen that meets the specifications of § 1065.750. We recommend FID analyzer zero and span gases that contain approximately the flow-weighted mean concentration of $O_2$ expected during testing. Record the $C_3H_8$ concentration of the gas.

(2) Select or prepare an alcohol/carbonyl calibration gas that meets the specifications of § 1065.750 and has a concentration typical of the peak concentration expected at the hydrocarbon standard. Record the calibration concentration of the gas.

(3) Start and operate the FID analyzer according to the manufacturer's instructions.

(4) Confirm that the FID analyzer has been calibrated using $C_3H_8$. Calibrate on a carbon number basis of one ($C_1$). For example, if you use a $C_3H_8$ span gas of concentration 200 μmol/mol, span the FID to respond with a value of 600 μmol/mol.

(5) Zero the FID. Note that FID zero and span balance gases may be any combination of purified air or purified nitrogen that meets the specifications of § 1065.750. We recommend FID analyzer zero and span gases that contain approximately the flow-weighted mean concentration of $O_2$ expected during testing.

(6) Span the FID with the $C_3H_8$ span gas that you selected under paragraph (a)(1) of this section.

(7) Introduce at the inlet of the FID analyzer the alcohol/carbonyl calibration gas that you selected under paragraph (a)(2) of this section.

(8) Allow time for the analyzer response to stabilize. Stabilization time may include time to purge the analyzer and to account for its response.

(9) While the analyzer measures the alcohol/carbonyl concentration, record 30 seconds of sampled data. Calculate the arithmetic mean of these values.

(10) Divide the mean measured concentration by the recorded span concentration of the alcohol/carbonyl calibration gas. The result is the FID analyzer's response factor for alcohol/carbonyl, $RF_{MeOH}$.

(b) Alcohol/carbonyl calibration gases must remain within ±2% of the labeled concentration. You must demonstrate the stability based on a quarterly measurement procedure with a precision of ±2% percent or another method that we approve. Your measurement procedure may incorporate multiple measurements. If the true concentration of the gas changes deviates by more than ±2%, but less than ±10%, the gas may be relabeled with the new concentration.

### § 1065.850 Calculations.

Use the calculations specified in § 1065.665 to determine THCE or NMHCE.

## Subpart J—Field Testing and Portable Emission Measurement Systems

### § 1065.901 Applicability.

(a) *Field testing.* This subpart specifies procedures for field-testing engines to determine brake-specific emissions using portable emission measurement systems (PEMS). These procedures are designed primarily for in-field measurements of engines that remain installed in vehicles or equipment in the field. Field-test procedures apply to your engines only as specified in the standard-setting part.

(b) *Laboratory testing.* You may optionally use PEMS for any laboratory testing, as long as the standard-setting part does not prohibit it for certain types of laboratory testing, subject to the following provisions:

(1) Follow the laboratory test procedures specified in this part 1065, according to § 1065.905(e).

(2) Do not apply any PEMS-related field-testing adjustments or ''measurement allowances'' to laboratory emission results or standards.

(3) Do not use PEMS for laboratory measurements if it prevents you from demonstrating compliance with the applicable standards. Some of the PEMS requirements in this part 1065 are less stringent than the corresponding laboratory requirements. Depending on actual PEMS performance, you might therefore need to account for some additional measurement uncertainty when using PEMS for laboratory testing. If we ask, you must show us by engineering analysis that any additional measurement uncertainty due to your use of PEMS for laboratory testing is offset by the extent to which your engine's emissions are below the applicable standards. For example, you might show that PEMS versus laboratory uncertainty represents 5% of the standard, but your engine's deteriorated emissions are at least 20% below the standard for each pollutant.

### § 1065.905 General provisions.

(a) *General.* Unless the standard-setting part specifies deviations from the provisions of this subpart, field testing and laboratory testing with PEMS must conform to the provisions of this subpart.

(b) *Field-testing scope.* Field testing conducted under this subpart may include any normal in-use operation of an engine.

(c) *Field testing and the standard-setting part.* This subpart J specifies procedures for field-testing various categories of engines. See the standard-setting part for specific provisions for a particular type of engine. Before using this subpart's procedures for field testing, read the standard-setting part to answer at least the following questions:

(1) How many engines must I test in the field?

(2) How many times must I repeat a field test on an individual engine?

(3) How do I select vehicles for field testing?

(4) What maintenance steps may I take before or between tests?

(5) What data are needed for a single field test on an individual engine?

(6) What are the limits on ambient conditions for field testing? Note that the ambient condition limits in § 1065.520 do not apply for field testing.

(7) Which exhaust constituents do I need to measure?

(8) How do I account for crankcase emissions?

(9) Which engine and ambient parameters do I need to measure?

(10) How do I process the data recorded during field testing to determine if my engine meets field-testing standards? How do I determine individual test intervals? Note that ''test interval'' is defined in subpart K of this part 1065.

(11) Should I warm up the test engine before measuring emissions, or do I need to measure cold-start emissions during a warm-up segment of in-use operation?

(12) Do any unique specifications apply for test fuels?

(13) Do any special conditions invalidate parts of a field test or all of a field test?

(14) Does any special ''measurement allowance'' apply to field-test emission results or standards, based on using PEMS for field-testing versus using laboratory equipment and instruments for laboratory testing?

(15) Do results of initial field testing trigger any requirement for additional field testing or laboratory testing?

(16) How do I report field-testing results?

(d) *Field testing and this part 1065.* Use the following specifications for field testing:

(1) Use the applicability and general provisions of subpart A of this part.

(2) Use equipment specifications in § 1065.101 and in the sections from § 1065.140 to the end of subpart B of this part. Section 1065.910 specifies additional equipment specific to field testing.

(3) Use measurement instruments in subpart C of this part, except as specified in § 1065.915.

(4) Use calibrations and verifications in subpart D of this part, except as specified in § 1065.920. Section 1065.920 also specifies additional calibrations and verifications for field testing.

(5) Use the provisions of the standard-setting part for selecting and maintaining engines in the field instead of the specifications in subpart E of this part.

(6) Use the procedures in §§ 1065.930 and 1065.935 to start and run a field test. If you use a gravimetric balance for PM, weigh PM samples according to §§ 1065.590 and 1065.595.

(7) Use the calculations in subpart G of this part to calculate emissions over each test interval. Note that ''test interval'' is defined in subpart K of this part 1065, and that the standard setting part indicates how to determine test intervals for your engine.

Section 1065.940 specifies additional calculations for field testing. Use any calculations specified in the standard-setting part to determine if your engines meet the field-testing standards. The standard-setting part may also contain additional calculations that determine when further field testing is required.

(8) Use a typical in-use fuel meeting the specifications of § 1065.701(d).

(9) Use the lubricant and coolant specifications in § 1065.740 and § 1065.745.

(10) Use the analytical gases and other calibration standards in § 1065.750 and § 1065.790.

(11) If you are testing with oxygenated fuels, use the procedures specified for testing with oxygenated fuels in subpart I of this part.

(12) Apply the definitions and reference materials in subpart K of this part.

(e) *Laboratory testing using PEMS.* Use the following specifications when using PEMS for laboratory testing:

(1) Use the applicability and general provisions of subpart A of this part.

(2) Use equipment specifications in subpart B of this part. Section 1065.910

specifies additional equipment specific to testing with PEMS.

(3) Use measurement instruments in subpart C of this part, except as specified in § 1065.915.

(4) Use calibrations and verifications in subpart D of this part, except as specified in § 1065.920. Section 1065.920 also specifies additional calibration and verifications for PEMS.

(5) Use the provisions of § 1065.401 for selecting engines for testing. Use the provisions of subpart E of this part for maintaining engines, except as specified in the standard-setting part.

(6) Use the procedures in subpart F of this part and in the standard-setting part to start and run a laboratory test.

(7) Use the calculations in subpart G of this part to calculate emissions over the applicable duty cycle. Section 1065.940 specifies additional calculations for testing with PEMS.

(8) Use a fuel meeting the specifications of subpart H of this part, as specified in the standard-setting part.

(9) Use the lubricant and coolant specifications in § 1065.740 and § 1065.745.

(10) Use the analytical gases and other calibration standards in § 1065.750 and § 1065.790.

(11) If you are testing with oxygenated fuels, use the procedures specified for testing with oxygenated fuels in subpart I of this part.

(12) Apply the definitions and reference materials in subpart K of this part.

(f) *Summary.* The following table summarizes the requirements of paragraphs (d) and (e) of this section:

TABLE 1 OF § 1065.905.—SUMMARY OF TESTING REQUIREMENTS THAT ARE SPECIFIED OUTSIDE OF THIS SUBPART J [1]

| Subpart | Applicability for field testing | Applicability for laboratory testing with PEMS |
|---|---|---|
| A: Applicability and general provisions | Use all | Use all. |
| B: Equipment for testing | Use § 1065.101 and § 1065.140 through the end of subpart B. § 1065.910 specifies equipment specific to field testing. | Use all. § 1065.910 specifies equipment specific to laboratory testing with PEMS. |
| C: Measurement instruments | Use all | Use all. |
| | § 1065.915 allows deviations | § 1065.915 allows deviations. |
| D: Calibrations and verifications | Use all | Use all. |
| | § 1065.920 allows deviations, but also has additional specifications. | § 1065.920 allows deviations, but also has additional specifications. |
| E: Test engine selection, maintenance, and durability. | Do not use | Use all. |
| | Use standard-setting part | |
| F: Running an emission test in the laboratory | Use §§ 1065.590 and 1065.595 for PM | Use all. |
| | § 1065.930 and § 1065.935 to start and run a field test. | |
| G: Calculations and data requirements | Use all | Use all. |
| | Use standard-setting part | Use standard-setting part. |
| | § 1065.940 has additional calculation instructions. | § 1065.940 has additional calculation instructions. |
| H: Fuels, engine fluids, analytical gases, and other calibration materials. | Use fuels specified in § 1065.701(d) | Use fuels from subpart H of this part as specified in standard-setting part. |
| | Use lubricant and coolant specifications in § 1065.740 and § 1065.745. | Use lubricant and coolant specifications in subpart H of this part. |
| | Use analytical gas specifications and other calibration standards in § 1065.750 and § 1065.790. | Use analytical gas specifications and other calibration standards in § 1065.750 and § 1065.790. |
| I: Testing with oxygenated fuels | Use all | Use all. |
| K: Definitions and reference materials | Use all | Use all. |

[1] Refer to paragraphs (d) and (e) of this section for complete specifications.

**§ 1065.910 PEMS auxiliary equipment for field testing.**

For field testing you may use various types of auxiliary equipment to attach PEMS to a vehicle or engine and to power PEMS.

(a) When you use PEMS, you will likely route engine exhaust to a raw-exhaust flow meter and sample probes. Route the engine exhaust as follows:

(1) *Flexible connections.* Use short flexible connectors at the end of the engine's exhaust pipe.

(i) You may use flexible connectors to enlarge or reduce the exhaust-pipe diameter to match that of your test equipment.

(ii) Use flexible connectors that do not exceed a length of three times their largest inside diameter.

(iii) Use four-ply silicone-fiberglass fabric with a temperature rating of at least 315 °C for flexible connectors. You may use connectors with a spring-steel wire helix for support and you may use Nomex™ coverings or linings for durability. You may also use any other material with equivalent permeation-resistance and durability, as long as it seals tightly around tailpipes and does not react with exhaust.

(iv) Use stainless-steel hose clamps to seal flexible connectors to the outside diameter of tailpipes, or use clamps that seal equivalently.

(v) You may use additional flexible connectors to connect to flow meters and sample probe locations.

(2) *Raw exhaust tubing.* Use rigid 300 series stainless steel tubing to connect between flexible connectors. Tubing may be straight or bent to accommodate vehicle geometry. You may use ''T'' or ''Y'' fittings made of 300 series stainless steel tubingto join exhaust from multiple tailpipes, or you may cap or plug redundant tailpipes if the engine manufacturer recommends it.

(3) *Exhaust back pressure.* Use connectors and tubing that do not increase back pressure so much that it exceeds the manufacturer's maximum specified exhaust restriction. You may verify this at the maximum exhaust flow rate by measuring back pressure at the manufacturer-specified location with your system connected. You may also perform an engineering analysis to verify proper back pressure, taking into account the maximum exhaust flow rate expected, the field test system's flexible connectors, and the tubing's characteristics for pressure drops versus flow.

(b) For vehicles or other motive equipment, we recommend installing PEMS in the same location where passenger might sit. Follow PEMS manufacturer instructions for installing PEMS in vehicle cargo spaces, vehicle trailers, or externally such that PEMS is directly exposed to the outside environment. Locate PEMS where it will be subject to minimal sources of the following parameters:

(1) Ambient temperature changes.

(2) Ambient pressure changes.

(3) Electromagnetic radiation.

(4) Mechanical shock and vibration.

(5) Ambient hydrocarbons—if using a FID analyzer that uses ambient air as FID burner air.

(c) *Mounting hardware.* Use mounting hardware as required for securing flexible connectors, exhaust tubing, ambient sensors, and other equipment. Use structurally sound mounting points such as vehicle frames, trailer hitch receivers, and payload tie-down fittings. We recommend mounting hardware such as clamps, suction cups, and magnets that are specifically designed for vehicle applications. We also recommend considering mounting hardware such as commercially available bicycle racks, trailer hitches, and luggage racks.

(d) *Electrical power.* Field testing may require portable electrical power to run your test equipment. Power your equipment, as follows:

(1) You may use electrical power from the vehicle, up to the highest power level, such that all the following are true:

(i) The vehicle power system is capable of safely supplying your power, such that your demand does not overload the vehicle's power system.

(ii) The engine emissions do not change significantly when you use vehicle power.

(iii) The power you demand does not increase output from the engine by morethan 1% of its maximum power.

(2) You may install your own portable power supply. For example, you may use batteries, fuel cells, a portable generator, or any other power supply to supplement or replace your use of vehicle power. However, you must not supply power to the vehicle's power system under any circumstances.

**§ 1065.915 PEMS instruments.**

(a) *Instrument specifications.* We recommend that you use PEMS that meet the specifications of subpart C of this part. For field testing of for laboratory testing with PEMS, the specifications in the following table apply instead of the specifications in Table 1 of § 1065.205.

TABLE 1 OF § 1065.915.—RECOMMENDED MINIMUM PEMS MEASUREMENT INSTRUMENT PERFORMANCE

| Measurement | Measured quantity symbol | Rise time and fall time | Recording update frequency | Accuracy [1] | Repeatability [1] | Noise [1] |
|---|---|---|---|---|---|---|
| Engine speed transducer | fn | 1 s | 1 Hz means | 5.0% of pt. or 1.0% of max. | 2.0% of pt. or 1.0% of max. | 0.5% of max. |
| Engine torque estimator, BSFC (This is a signal from an engine's ECM). | T or BSFC | 1 s | 1 Hz means | 8.0% of pt. or 5% of max. | 2.0% of pt. or 1.0% of max. | 1.0% of max. |
| General pressure transducer (not a part of another instrument). | p | 5 s | 1 Hz | 5.0% of pt. or 5.0% of max. | 2.0% of pt. or 0.5% of max. | 1.0% of max. |
| Atmospheric pressure meter | patmos | 50 s | 0.1 Hz | 250 Pa | 200 Pa | 100 Pa. |
| General temperature sensor (not a part of another instrument). | T | 5 s | 1 Hz | 1.0% of pt. K or 5 K. | 0.5% of pt. K or 2 K. | 0.5% of max 0.5 K. |
| General dewpoint sensor | Tdew | 50 s | 0.1 Hz | 3 K | 1 K | 1 K. |
| Exhaust flow meter | $\dot{n}$ | 1 s | 1 Hz means | 5.0% of pt. or 3.0% of max. | 2.0% of pt | 2.0% of max. |
| Dilution air, inlet air, exhaust, and sample flow meters. | $\dot{n}$ | 1 s | 1 Hz means | 2.5% of pt. or 1.5% of max. | 1.25% of pt. or 0.75% of max. | 1.0% of max. |
| Continuous gas analyzer | X | 5 s | 1 Hz | 4.0% of pt. or 4.0% of meas. | 2.0% of pt. or 2.0% of meas. | 1.0% of max. |
| Gravimetric PM balance | $m_{PM}$ | N/A | N/A | *See* § 1065.790 | 0.5 μg | N/A |
| Inertial PM balance | $m_{PM}$ | 5 s | 1 Hz | 4.0% of pt. or 4.0% of meas. | 2.0% of pt. or 2.0% of meas. | 1.0% of max. |

[1] Accuracy, repeatability, and noise are all determined with the same collected data, as described in § 1065.305, and based on absolute values. "pt." refers to the overall flow-weighted mean value expected at the standard; "max." refers to the peak value expected at the standard over any test interval, not the maximum of the instrument's range; "meas" refers to the actual flow-weighted mean measured over any test interval.

(b) *Redundant measurements.* For all PEMS described in this subpart, you may use data from multiple instruments to calculate test results for a single test. If you use redundant systems, use good engineering judgment to use multiple measured values in calculations or to disregard individual measurements. Note that you must keep your results from all measurements, as described in § 1065.25. This requirement applies whether or not you actually use the measurements in your calculations.

(c) *Field-testing ambient effects on PEMS.* PEMS must be only minimally affected by ambient conditions such as temperature, pressure, humidity, physical orientation, mechanical shock and vibration, electromagnetic radiation, and ambient hydrocarbons. Follow the PEMS manufacturer's instructions for proper installation to isolate PEMS from ambient conditions that affect their performance. If a PEMS is inherently affected by ambient conditions that you cannot control, you must monitor those conditions and adjust the PEMS signals to compensate for the ambient effect. The standard-setting part may also specify the use of one or more field-testing adjustments or "measurement allowances" that you apply to results or standards to account for ambient effects on PEMS.

(d) *ECM signals.* You may use signals from the engine's electronic control module (ECM) in place of values measured by individual instruments within a PEMS, subject to the following provisions:

(1) *Recording ECM signals.* If your ECM updates a broadcast signal more frequently than 1 Hz, take one of the following steps:

(i) Use PEMS to sample and record the signal's value more frequently—up

to 5 Hz maximum. Calculate and record the 1 Hz mean of the more frequently updated data.

(ii) Use PEMS to electronically filter the ECM signals to meet the rise time and fall time specifications in Table 1 of this section. Record the filtered signal at 1 Hz.

(2) *Omitting ECM signals.* Replace any discontinuous or irrational ECM data with linearly interpolated values from adjacent data.

(3) *Aligning ECM signals with other data.* You must perform time-alignment and dispersion of ECM signals, according to PEMS manufacturer instructions and using good engineering judgment.

(4) *ECM signals for determining test intervals.* You may use any combination of ECM signals, with or without other measurements, to determine the start-time and end-time of a test interval.

(5) *ECM signals for determining brake-specific emissions.* You may use any combination of ECM signals, with or without other measurements, to estimate engine speed, torque, and brake-specific fuel consumption (BSFC, in units of mass of fuel per kW-hr) for use in brake-specific emission calculations. We recommend that the overall performance of any speed, torque, or BSFC estimator should meet the performance specifications in Table 1 of this section. We recommend using one of the following methods:

(i) *Speed.* Use the engine speed signal directly from the ECM. This signal is generally accurate and precise. You may develop your own speed algorithm based on other ECM signals.

(ii) *Torque.* Use one of the following:

(A) *ECM torque.* Use the engine-torque signal directly from the ECM, if broadcast. Determine if this signal is proportional to indicated torque or brake torque. If it is proportional to indicated torque, subtract friction torque from indicated torque and record the result as brake torque. Friction torque may be a separate signal broadcast from the ECM or you may have to determine it from laboratory data as a function of engine speed.

(B) *ECM %-load.* Use the %-load signal directly from the ECM, if broadcast. Determine if this signal is proportional to indicated torque or brake torque. If it is proportional to indicated torque, subtract the minimum %-load value from the %-load signal. Multiply this result by the maximum brake torque at the corresponding engine speed. Maximum brake torque versus speed information is commonly published by the engine manufacturer.

(C) *Your algorithms.* You may develop and use your own combination of ECM signals to determine torque.

(iii) *BSFC.* Use one of the following:

(A) Use ECM engine speed and ECM fuel flow signals to interpolate brake-specific fuel consumption data, which might be available from an engine laboratory as a function of ECM engine speed and ECM fuel signals.

(B) Use a single BSFC value that approximates the BSFC value over a test interval (as defined in subpart K of this part). This value may be a nominal BSFC value for all engine operation determined over one or more laboratory duty cycles, or it may be any other BSFC that we approve. If you use a nominal BSFC, we recommend that you select a value based on the BSFC measured over laboratory duty cycles that best represent the range of engine operation that defines a test interval for field-testing.

(C) You may develop and use your own combination of ECM signals to determine BSFC.

(iv) *Other ECM signals.* You may ask to use other ECM signals for determining brake-specific emissions, such as ECM fuel flow or ECM air flow. We must approve the use of such signals in advance.

(6) *Permissible deviations.* ECM signals may deviate from the specifications of this part 1065, but the expected deviation must not prevent you from demonstrating that you meet the applicable standards. For example, your emission results may be sufficiently below an applicable standard, such that the deviation would not significantly change the result. As another example, a very low engine-coolant temperature may define a logical statement that determines when a test interval may start. In this case, even if the ECM's sensor for detecting coolant temperature was not very accurate or repeatable, its output would never deviate so far as to significantly affect when a test interval may start.

**§ 1065.920 PEMS Calibrations and verifications.**

(a) *Subsystem calibrations and verifications.* Use all the applicable calibrations and verifications in subpart D of this part, including the linearity verifications in § 1065.307, to calibrate and verify PEMS. Note that a PEMS does not have to meet the system-response specifications of § 1065.308 if it meets the overall verification described in paragraph (b) of this section.

(b) *Overall verification.* We require only that you maintain a record showing that the particular make, model, and configuration of your PEMS meets this verification. We recommend that you generate your own record to show that your specific PEMS meets this verification, but you may also rely on data and other information from the PEMS manufacturer. If you upgrade or change the configuration of your PEMS, your record must show that your new configuration meets this verification. The verification consists of operating an engine over a duty cycle in the laboratory and statistically comparing data generated and recorded by the PEMS with data simultaneously generated and recorded by laboratory equipment as follows:

(1) Mount an engine on a dynamometer for laboratory testing. Prepare the laboratory and PEMS for emission testing, as described in this part, to get simultaneous measurements. We recommend selecting an engine with emission levels close to the applicable duty-cycle standards, if possible.

(2) Select or create a duty cycle that has all the following characteristics:

(i) Engine operation that represents normal in-use speeds, loads, and degree of transient activity. Consider using data from previous field tests to generate a cycle.

(ii) A duration of (20 to 40) min.

(iii) At least 50% of engine operating time must include at least 10 valid test intervals for calculating emission levels for field testing. For example, for highway compression-ignition engines, select a duty cycle in which at least 50% of the engine operating time can be used to calculate valid NTE events.

(3) Starting with a warmed-up engine, run a valid emission test with the duty cycle from paragraph (b)(2) of this section. The laboratory and PEMS must both meet applicable validation requirements, such as drift validation, hydrocarbon contamination validation, and proportional validation.

(4) Determine the brake-specific emissions for each test interval for both laboratory and the PEMS measurements, as follows:

(i) For both laboratory and PEMS measurements, use identical values to determine the beginning and end of each test interval.

(ii) For both laboratory and PEMS measurements, use identical values to determine total work over each test interval.

(iii) Apply any ''measurement allowance'' to the PEMS data. If the measurement allowance is normally added to the standard, subtract the measurement allowance from the PEMS brake-specific emission result.

(iv) Round results to the same number of significant digits as the standard.

(5) Repeat the engine duty cycle and calculations until you have at least 100 valid test intervals.

(6) For each test interval and emission, subtract the lab result from the PEMS result.

(7) If for each constituent, the PEMS passes this verification if any one of the following are true:

(i) 91% or more of the differences are zero or less than zero.

(ii) The entire set of test-interval results passes the 95% confidence alternate-procedure statistics for field testing (t-test and F-test) specified in subpart A of this part.

**§ 1065.925 PEMS preparation for field testing.**

Take the following steps to prepare PEMS for field testing:

(a) Verify that ambient conditions at the start of the test are within the limits specified in the standard-setting part. Continue to monitor these values to determine if ambient conditions exceed the limits during the test.

(b) Install a PEMS and any accessories needed to conduct a field test.

(c) Power the PEMS and allow pressures, temperatures, and flows to stabilize to their operating set points.

(d) Bypass or purge any gaseous sampling PEMS instruments with ambient air until sampling begins to prevent system contamination from excessive cold-start emissions.

(e) Conduct calibrations and verifications.

(f) Operate any PEMS dilution systems at their expected flow rates using a bypass.

(g) If you use a gravimetric balance to determine whether an engine meets an applicable PM standard, follow the procedures for PM sample preconditioning and tare weighing as described in § 1065.590. Operate the PM-sampling system at its expected flow rates using a bypass.

(h) Verify the amount of contamination in the PEMS HC sampling system as follows:

(1) Select the HC analyzers' ranges for measuring the maximum concentration expected at the HC standard.

(2) Zero the HC analyzers using a zero gas introduced at the analyzer port. When zeroing the FIDs, use the FIDs' burner air that would be used for in-use measurements (generally either ambient air or a portable source of burner air).

(3) Span the HC analyzers using span gas introduced at the analyzer port. When spanning the FIDs, use the FIDs' burner air that would be used in-use (for example, use ambient air or a portable source of burner air).

(4) Overflow zero air at the HC probe or into a fitting between the HC probe and the transfer line.

(5) Measure the HC concentration in the sampling system:

(i) For continuous sampling, record the mean HC concentration as overflow zero air flows.

(ii) For batch sampling, fill the sample medium and record its mean concentration.

(6) Record this value as the initial HC concentration, $x_{HCinit}$, and use it to correct measured values as described in § 1065.660.

(7) If the initial HC concentration exceeds the greater of the following values, determine the source of the contamination and take corrective action, such as purging the system or replacing contaminated portions:

(i) 2% of the flow-weighted mean concentration expected at the standard or measured during testing.

(ii) 2 μmol/mol.

(8) If corrective action does not resolve the deficiency, you use a contaminated HC system if it does not prevent you from demonstrating compliance with the applicable emission standards.

**§ 1065.930 Engine starting, restarting, and shutdown.**

Unless the standard-setting part specifies otherwise, start, restart, and shut down the test engine for field testing as follows:

(a) Start or restart the engine as described in the owners manual.

(b) If the engine does not start after 15 seconds of cranking, stop cranking and determine the reason it failed to start. However, you may crank the engine longer than 15 seconds, as long as the owners manual or the service-repair manual describes the longer cranking time as normal.

(c) Respond to engine stalling with the following steps:

(1) If the engine stalls during a required warm-up before emission sampling begins, restart the engine and continue warm-up.

(2) If the engine stalls at any other time after emission sampling begins, restart the engine and continue testing.

(d) Shut down and restart the engine according to the manufacturer's specifications, as needed during normal operation in-use, but continue emission sampling until the field test is complete.

**§ 1065.935 Emission test sequence for field testing.**

(a) Time the start of field testing as follows:

(1) If the standard-setting part requires only hot-stabilized emission measurements, operate the engine in-use until the engine coolant, block, or head absolute temperature is within ±10% of its mean value for the previous 2 min or until an engine thermostat controls engine temperature with coolant or air flow.

(2) If the standard-setting part requires hot-start emission measurements, shut down the engine after at least 2 min at the temperature tolerance specified in paragraph (a)(1) of this section. Start the field test within 20 min of engine shutdown.

(3) If the standard-setting part requires cold-start emission measurements, proceed to the steps specified in paragraph (b) of this section.

(b) Take the following steps before emission sampling begins:

(1) For batch sampling, connect clean storage media, such as evacuated bags or tare-weighed PM sample media.

(2) Operate the PEMS according to the instrument manufacturer's instructions and using good engineering judgment.

(3) Operate PEMS heaters, dilution systems, sample pumps, cooling fans, and the data-collection system.

(4) Pre-heat or pre-cool PEMS heat exchangers in the sampling system to within their tolerances for operating temperatures.

(5) Allow all other PEMS components such as sample lines, filters, and pumps to stabilize at operating temperature.

(6) Verify that no significant vacuum-side leak exists in the PEMS, as described in § 1065.345.

(7) Adjust PEMS flow rates to desired levels, using bypass flow if applicable.

(8) Zero and span all PEMS gas analyzers using NIST-traceable gases that meet the specifications of § 1065.750.

(c) Start testing as follows:

(1) Before the start of the first test interval, zero or re-zero any PEMS electronic integrating devices, as needed.

(2) If the engine is already running and warmed up and starting is not part of field testing, start the field test by simultaneously starting to sample exhaust, record engine and ambient data, and integrate measured values using a PEMS.

(3) If engine starting is part of field testing, start field testing by simultaneously starting to sample from the exhaust system, record engine and ambient data, and integrate measured values using a PEMS. Then start the engine.

(d) Continue the test as follows:

(1) Continue to sample exhaust, record data and integrate measured values throughout normal in-use operation of the engine.

(2) Between each test interval, zero or re-zero any electronic integrating devices, and reset batch storage media, as needed.

(3) The engine may be stopped and started, but continue to sample emissions throughout the entire field test.

(4) Conduct periodic verifications such as zero and span verifications on PEMS gas analyzers, as recommended by the PEMS manufacturer or as indicated by good engineering judgment. Results from these verifications will be used to calculate and correct for drift according to paragraph (g) of this section. Do not include data recorded during verifications in emission calculations.

(5) You may periodically condition and analyze batch samples in-situ, including PM samples; for example you may condition an inertial PM balance substrate if you use an inertial balance to measure PM.

(6) You may have personnel monitoring and adjusting the PEMS during a test, or you may operate the PEMS unattended.

(e) Stop testing as follows

(1) Continue sampling as needed to get an appropriate amount of emission measurement, according to the standard setting part. If the standard-setting part does not describe when to stop sampling, develop a written protocol before you start testing to establish how you will stop sampling. You may not determine when to stop testing based on measured values.

(2) At the end of the field test, allow the sampling systems' response times to elapse and then stop sampling. Stop any integrators and indicate the end of the test cycle on the data-collection medium.

(3) You may shut down the engine before or after you stop sampling.

(f) For any proportional batch sample, such as a bag sample or PM sample, verify for each test interval whether or not proportional sampling was maintained according to § 1065.545. Void the sample for any test interval that did not maintain proportional sampling according to § 1065.545.

(g) Take the following steps after emission sampling is complete:

(1) As soon as practical after the emission sampling, analyze any gaseous batch samples.

(2) If you used dilution air, either analyze background samples or assume that background emissions were zero. Refer to § 1065.140 for dilution-air specifications.

(3) After quantifying all exhaust gases, record mean analyzer values after stabilizing a zero gas to each analyzer, then record mean analyzer values after stabilizing the span gas to the analyzer. Stabilization may include time to purge an analyzer of any sample gas, plus any additional time to account for analyzer response. Use these recorded values to correct for drift as described in § 1065.550.

(4) Invalidate any test intervals that do not meet the range criteria in § 1065.550. Note that it is acceptable that analyzers exceed 100% of their ranges when measuring emissions between test intervals, but not during test intervals. You do not have to retest an engine in the field if the range criteria are not met.

(5) Invalidate any test intervals that do not meet the drift criterion in § 1065.550. For test intervals that do meet the drift criterion, correct those test intervals for drift according to § 1065.672 and use the drift corrected results in emissions calculations.

(6) Unless you weighed PM in-situ, such as by using an inertial PM balance, place any used PM samples into covered or sealed containers and return them to the PM-stabilization environment and weigh them as described in § 1065.595.

### § 1065.940 Emission calculations.

Perform emission calculations as described in § 1065.650 to calculate brake-specific emissions for each test interval using any applicable information and instructions in the standard-setting part.

## Subpart K—Definitions and Other Reference Information

### § 1065.1001 Definitions.

The definitions in this section apply to this part. The definitions apply to all subparts unless we note otherwise. All undefined terms have the meaning the Act gives them. The definitions follow:

*300 series stainless steel* means any stainless steel alloy with a Unified Numbering System for Metals and Alloys number designated from S30100 to S39000. For all instances in this part where we specify 300 series stainless steel, such parts must also have a smooth inner-wall construction. We recommend an average roughness, $R_a$, no greater than 4 μm.

*Accuracy* means the absolute difference between a reference quantity and the arithmetic mean of ten mean measurements of that quantity. Determine instrument accuracy, repeatability, and noise from the same data set. We specify a procedure for determining accuracy in § 1065.305.

*Act* means the Clean Air Act, as amended, 42 U.S.C. 7401–7671q.

*Adjustable parameter* means any device, system, or element of design that someone can adjust (including those which are difficult to access) and that, if adjusted, may affect emissions or engine performance during emission testing or normal in-use operation. This includes, but is not limited to, parameters related to injection timing and fueling rate. In some cases, this may exclude a parameter that is difficult to access if it cannot be adjusted to affect emissions without significantly degrading engine performance, or if it will not be adjusted in a way that affects emissions during in-use operation.

*Aerodynamic diameter* means the diameter of a spherical water droplet that settles at the same constant velocity as the particle being sampled.

*Aftertreatment* means relating to a catalytic converter, particulate filter, or any other system, component, or technology mounted downstream of the exhaust valve (or exhaust port) whose design function is to decrease emissions in the engine exhaust before it is exhausted to the environment. Exhaust-gas recirculation (EGR) and turbochargers are not aftertreatment.

*Allowed procedures* means procedures that we either specify in this part 1065 or in the standard-setting part or approve under § 1065.10.

*Alternate procedures* means procedures allowed under § 1065.10(c)(7).

*Applicable standard* means an emission standard to which an engine is subject; or a family emission limit to which an engine is certified under an emission credit program in the standard-setting part.

*Aqueous condensation* means the precipitation of water-containing constituents from a gas phase to a liquid phase. Aqueous condensation is a function of humidity, pressure, temperature, and concentrations of other constituents such as sulfuric acid. These parameters vary as a function of engine intake-air humidity, dilution-air humidity, engine air-to-fuel ratio, and fuel composition—including the amount of hydrogen and sulfur in the fuel.

*Atmospheric pressure* means the wet, absolute, atmospheric static pressure. Note that if you measure atmospheric pressure in a duct, you must ensure that there are negligible pressure losses between the atmosphere and your measurement location, and you must account for changes in the duct's static pressure resulting from the flow.

*Auto-ranging* means a gas analyzer function that automatically changes the analyzer digital resolution to a larger range of concentrations as the concentration approaches 100% of the analyzer's current range. Auto-ranging

does not mean changing an analog amplifier gain within an analyzer.

*Auxiliary emission-control device* means any element of design that senses temperature, motive speed, engine RPM, transmission gear, or any other parameter for the purpose of activating, modulating, delaying, or deactivating the operation of any part of the emission-control system.

*Brake power* has the meaning given in the standard-setting part. If it is not defined in the standard-setting part, brake power means the usable power output of the engine, not including power required to fuel, lubricate, or heat the engine, circulate coolant to the engine, or to operate aftertreatment devices. If the engine does not power these accessories during a test, subtract the work required to perform these functions from the total work used in brake-specific emission calculations. Subtract engine fan work from total work only for air-cooled engines.

*$C_1$ equivalent (or basis)* means a convention of expressing HC concentrations based on the total number of carbon atoms present, such that the $C_1$ equivalent of a molar HC concentration equals the molar concentration multiplied by the mean number of carbon atoms in each HC molecule. For example, the $C_1$ equivalent of 10 μmol/mol of propane ($C_3H_8$) is 30 μmol/mol. $C_1$ equivalent molar values may be denoted as ''ppmC'' in the standard-setting part.

*Calibration* means the process of setting a measurement system's response so that its output agrees with a range of reference signals. Contrast with ''verification''.

*Certification* means relating to the process of obtaining a certificate of conformity for an engine family that complies with the emission standards and requirements in the standard-setting part.

*Compression-ignition* means relating to a type of reciprocating, internal-combustion engine that is not a spark-ignition engine.

*Confidence interval* means the range associated with a probability that a quantity will be considered statistically equivalent to a reference quantity.

*Constant-speed engine* means an engine whose certification is limited to constant-speed operation. Engines whose constant-speed governor function is removed or disabled are no longer constant-speed engines.

*Constant-speed operation* means engine operation with a governor that automatically controls the operator demand to maintain engine speed, even under changing load. Governors do not always maintain speed exactly constant. Typically speed can decrease (0.1 to 10)% below the speed at zero load, such that the minimum speed occurs near the engine's point of maximum power.

*Coriolis meter* means a flow-measurement instrument that determines the mass flow of a fluid by sensing the vibration and twist of specially designed flow tubes as the flow passes through them. The twisting characteristic is called the Coriolis effect. According to Newton's Second Law of Motion, the amount of sensor tube twist is directly proportional to the mass flow rate of the fluid flowing through the tube. See § 1065.220.

*Designated Compliance Officer* means the Manager, Engine Programs Group (6405–J), U.S. Environmental Protection Agency, 1200 Pennsylvania Ave., NW., Washington, DC 20460.

*Dewpoint* means a measure of humidity stated as the equilibrium temperature at which water condenses under a given pressure from moist air with a given absolute humidity. Dewpoint is specified as a temperature in °C or K, and is valid only for the pressure at which it is measured. See § 1065.645 to determine water vapor mole fractions from dewpoints using the pressure at which the dewpoint is measured.

*Discrete-mode* means relating to a discrete-mode type of steady-state test, as described in the standard-setting part.

*Dispersion* means either:

(1) The broadening and lowering of a signal due to any fluid capacitance, fluid mixing, or electronic filtering in a sampling system. (Note: To adjust a signal so its dispersion matches that of another signal, you may adjust the system's fluid capacitance, fluid mixing, or electronic filtering.)

(2) The mixing of a fluid, especially as a result of fluid mechanical forces or chemical diffusion.

Drift means the difference between a zero or calibration signal and the respective value reported by a measurement instrument immediately after it was used in an emission test, as long as you zeroed and spanned the instrument just before the test.

*Duty cycle* means a series of speed and torque values (or power values) that an engine must follow during a laboratory test. Duty cycles are specified in the standard-setting part. A single duty cycle may consist of one or more test intervals. For example, a duty cycle may be a ramped-modal cycle, which has one test interval; a cold-start plus hot-start transient cycle, which has two test intervals; or a discrete-mode cycle, which has one test interval for each mode.

*Electronic control module* means an engine's electronic device that uses data from engine sensors to control engine parameters.

*Emission-control system* means any device, system, or element of design that controls or reduces the emissions of regulated pollutants from an engine.

*Emission-data engine* means an engine that is tested for certification. This includes engines tested to establish deterioration factors.

*Emission-related maintenance* means maintenance that substantially affects emissions or is likely to substantially affect emission deterioration.

*Engine* means an engine to which this part applies.

*Engine family* means a group of engines with similar emission characteristics throughout the useful life, as specified in the standard-setting part.

*Engine governed speed* means the engine operating speed when it is controlled by the installed governor.

*Exhaust-gas recirculation* means a technology that reduces emissions by routing exhaust gases that had been exhausted from the combustion chamber(s) back into the engine to be mixed with incoming air before or during combustion. The use of valve timing to increase the amount of residual exhaust gas in the combustion chamber(s) that is mixed with incoming air before or during combustion is not considered exhaust-gas recirculation for the purposes of this part.

*Fall time, $t_{90-10}$*, means the time interval of a measurement instrument's response after any step decrease to the input between the following points:

(1) The point at which the response has fallen 10% of the total amount it will fall in response to the step change.

(2) The point at which the response has fallen 90% of the total amount it will fall in response to the step change.

*Flow-weighted mean* means the mean of a quantity after it is weighted proportional to a corresponding flow rate. For example, if a gas concentration is measured continuously from the raw exhaust of an engine, its flow-weighted mean concentration is the sum of the products of each recorded concentration times its respective exhaust flow rate, divided by the sum of the recorded flow rates. As another example, the bag concentration from a CVS system is the same as the flow-weighted mean concentration, because the CVS system itself flow-weights the bag concentration.

*Fuel type* means a general category of fuels such as gasoline or LPG. There can be multiple grades within a single type

of fuel, such as all-season and winter-grade gasoline.

*Good engineering judgment* means judgments made consistent with generally accepted scientific and engineering principles and all available relevant information. See 40 CFR 1068.5 for the administrative process we use to evaluate good engineering judgment.

*HEPA filter* means high-efficiency particulate air filters that are rated to achieve a minimum initial particle-removal efficiency of 99.97% using ASTM F 1471–93 (incorporated by reference in § 1065.1010).

*Hydraulic diameter* means the diameter of a circle whose area is equal to the area of a noncircular cross section of tubing, including its wall thickness. The wall thickness is included only for the purpose of facilitating a simplified and nonintrusive measurement.

*Hydrocarbon* (HC) means THC, THCE, NMHC, or NMHCE, as applicable. Hydrocarbon generally means the hydrocarbon group on which the emission standards are based for each type of fuel and engine.

*Identification number* means a unique specification (for example, a model number/serial number combination) that allows someone to distinguish a particular engine from other similar engines.

*Idle speed* means the lowest engine speed with minimum load (greater than or equal to zero load), where an engine governor function controls engine speed. For engines without a governor function that controls idle speed, idle speed means the manufacturer-declared value for lowest engine speed possible with minimum load. Note that warm idle speed is the idle speed of a warmed-up engine.

*Intermediate test speed* has the meaning given in § 1065.610.

*Linearity* means the degree to which measured values agree with respective reference values. Linearity is quantified using a linear regression of pairs of measured values and reference values over a range of values expected or observed during testing. Perfect linearity would result in an intercept, $a_0$, equal to zero, a slope, $a_1$, of one, a coefficient of determination, $r^2$, of one, and a standard error of the estimate, SEE, of zero. The term ''linearity'' is not used in this part to refer to the shape of a measurement instrument's unprocessed response curve, such as a curve relating emission concentration to voltage output. A properly performing instrument with a nonlinear response curve will meet linearity specifications.

*Manufacturer* has the meaning given in section 216(1) of the Act. In general, this term includes any person who manufactures an engine or vehicle for sale in the United States or otherwise introduces a new nonroad engine into commerce in the United States. This includes importers who import engines or vehicles for resale.

*Maximum test speed* has the meaning given in § 1065.610.

*Maximum test torque* has the meaning given in § 1065.610.

*NIST-traceable* means relating to a standard value that can be related to NIST-stated references through an unbroken chain of comparisons, all having stated uncertainties, as specified in NIST Technical Note 1297 (incorporated by reference in § 1065.1010). Allowable uncertainty limits specified for NIST-traceability refer to the propagated uncertainty specified by NIST. You may ask to use other internationally recognized standards that are equivalent to NIST standards.

*Noise* means the precision of 30 seconds of updated recorded values from a measurement instrument as it quantifies a zero or reference value. Determine instrument noise, repeatability, and accuracy from the same data set. We specify a procedure for determining noise in § 1065.305.

*Nonmethane hydrocarbons (NMHC)* means the sum of all hydrocarbon species except methane. Refer to § 1065.660 for NMHC determination.

*Nonmethane hydrocarbon equivalent (NMHCE)* means the sum of the carbon mass contributions of non-oxygenated nonmethane hydrocarbons, alcohols and aldehydes, or other organic compounds that are measured separately as contained in a gas sample, expressed as exhaust nonmethane hydrocarbon from petroleum-fueled engines. The hydrogen-to-carbon ratio of the equivalent hydrocarbon is 1.85:1.

*Nonroad* means relating to nonroad engines.

*Nonroad engine* has the meaning we give in 40 CFR 1068.30. In general this means all internal-combustion engines except motor vehicle engines, stationary engines, engines used solely for competition, or engines used in aircraft.

*Open crankcase emissions* means any flow from an engine's crankcase that is emitted directly into the environment. Crankcase emissions are not ''open crankcase emissions'' if the engine is designed to always route all crankcase emissions back into the engine (for example, through the intake system or an aftertreatment system) such that all the crankcase emissions, or their products, are emitted into the environment only through the engine exhaust system.

*Operator demand* means an engine operator's input to control engine output. The ''operator'' may be a person (*i.e.*, manual), or a governor (*i.e.*, automatic) that mechanically or electronically signals an input that demands engine output. Input may be from an accelerator pedal or signal, a throttle-control lever or signal, a fuel lever or signal, a speed lever or signal, or a governor setpoint or signal. Output means engine power, P, which is the product of engine speed, $f_n$, and engine torque, T.

*Oxides of nitrogen* means compounds containing only nitrogen and oxygen as measured by the procedures specified in this part, except as specified in the standard-setting part. Oxides of nitrogen are expressed quantitatively as if the NO is in the form of $NO_2$, such that you use an effective molar mass for all oxides of nitrogen equivalent to that of $NO_2$.

*Oxygenated fuels* means fuels composed of oxygen-containing compounds, such as ethanol or methanol. Testing engines that use oxygenated fuels generally requires the use of the sampling methods in subpart I of this part. However, you should read the standard-setting part and subpart I of this part to determine appropriate sampling methods.

*Partial pressure* means the pressure, p, attributable to a single gas in a gas mixture. For an ideal gas, the partial pressure divided by the total pressure is equal to the constituent's molar concentration, x.

*Percent* (%) means a representation of exactly 0.01. Significant digits for the product of % and another value are defined as follows:

(1) Where we specify some percentage of a total value, the calculated value has the same number of significant digits as the total value. For example, 2% is exactly 0.02 and 2% of 101.3302 equals 2.026604.

(2) In other cases, determine the number of significant digits using the same method as you would use for determining the number of significant digits of a fractional value.

*Portable emission measurement system (PEMS)* means a measurement system consisting of portable equipment that can be used to generate brake-specific emission measurements during field testing or laboratory testing.

*Precision* means two times the standard deviation of a set of measured values of a single zero or reference quantity.

*Procedures* means all aspects of engine testing, including the equipment specifications, calibrations, calculations and other protocols and specifications

needed to measure emissions, unless we specify otherwise.

*Proving ring* is a device used to measure static force based on the linear relationship between stress and strain in an elastic material. It is typically a steel alloy ring, and you measure the deflection (strain) of its diameter when a static force (stress) is applied across its diameter.

*PTFE* means polytetrafluoroethylene, commonly known as Teflon™.

*Ramped-modal* means relating to a ramped-modal type of steady-state test, as described in the standard-setting part.

*Regression statistics* means any of the set of statistics specified in § 1065.602(i) through (l).

*Repeatability* means the precision of ten mean measurements of a reference quantity. Determine instrument repeatability, accuracy, and noise from the same data set. We specify a procedure for determining repeatability in § 1065.305.

*Revoke* has the meaning given in 40 CFR 1068.30.

*Rise time,* $t_{10-90}$, means the time interval of a measurement instrument's response after any step increase to the input between the following points:

(1) The point at which the response has risen 10% of the total amount it will rise in response to the step change.

(2) The point at which the response has risen 90% of the total amount it will rise in response to the step change.

*Roughness (or average roughness,* $R_a$*)* means the size of finely distributed vertical surface deviations from a smooth surface, as determined when traversing a surface. It is an integral of the absolute value of the roughness profile measured over an evaluation length.

*Round* means to round numbers according to NIST SP 811 (incorporated by reference in § 1065.1010), unless otherwise specified.

*Scheduled maintenance* means adjusting, repairing, removing, disassembling, cleaning, or replacing components or systems periodically to keep a part or system from failing, malfunctioning, or wearing prematurely. It also may mean actions you expect are necessary to correct an overt indication of failure or malfunction for which periodic maintenance is not appropriate.

*Shared atmospheric pressure meter* means an atmospheric pressure meter whose output is used as the atmospheric pressure for an entire test facility that has more than one dynamometer test cell.

*Shared humidity measurement* means a humidity measurement that is used as the humidity for an entire test facility that has more than one dynamometer test cell.

*Span* means to adjust an instrument so that it gives a proper response to a calibration standard that represents between 75% and 100% of the maximum value in the instrument range or expected range of use.

*Spark-ignition* means relating to a gasoline-fueled engine or any other type of engine with a spark plug (or other sparking device) and with operating characteristics significantly similar to the theoretical Otto combustion cycle. Spark-ignition engines usually use a throttle to regulate intake air flow to control power during normal operation.

*Special procedures* means procedures allowed under § 1065.10(c)(2).

*Specified procedures* means procedures we specify in this part 1065 or the standard-setting part. Other procedures allowed or required by § 1065.10(c) are not specified procedures.

*Standard deviation* has the meaning given in § 1065.602. Note this is the standard deviation for a non-biased sample.

*Standard-setting part* means the part in the Code of Federal Regulations that defines emission standards for a particular engine. See § 1065.1(a).

*Steady-state* means relating to emission tests in which engine speed and load are held at a finite set of nominally constant values. Steady-state tests are either discrete-mode tests or ramped-modal tests.

*Stoichiometric* means relating to the particular ratio of air and fuel such that if the fuel were fully oxidized, there would be no remaining fuel or oxygen. For example, stoichiometric combustion in a gasoline-fueled engine typically occurs at an air-to-fuel mass ratio of about 14.7:1.

*Storage medium* means a particulate filter, sample bag, or any other storage device used for batch sampling.

*Test engine* means an engine in a test sample.

*Test interval* means a duration of time over which you determine brake-specific emissions. For example, the standard-setting part may specify a complete laboratory duty cycle as a cold-start test interval, plus a hot-start test interval. As another example, a standard-setting part may specify a field-test interval, such as a ''not-to-exceed'' (NTE) event, as a duration of time over which an engine operates within a certain range of speed and torque. In cases where multiple test intervals occur over a duty cycle, the standard-setting part may specify additional calculations that weight and combine results to arrive at composite values for comparison against the applicable standards.

*Test sample* means the collection of engines selected from the population of an engine family for emission testing.

*Tolerance* means the interval in which 95% of a set of recorded values of a certain quantity must lie, with the remaining 5% of the recorded values deviating from the tolerance interval only due to measurement variability. Use the specified recording frequencies and time intervals to determine if a quantity is within the applicable tolerance. For parameters not subject to measurement variability, tolerance means an absolute allowable range.

*Total hydrocarbon (THC)* means the combined mass of organic compounds measured by the specified procedure for measuring total hydrocarbon, expressed as a hydrocarbon with a hydrogen-to-carbon mass ratio of 1.85:1.

*Total hydrocarbon equivalent (THCE)* means the sum of the carbon mass contributions of non-oxygenated hydrocarbons, alcohols and aldehydes, or other organic compounds that are measured separately as contained in a gas sample, expressed as exhaust hydrocarbon from petroleum-fueled engines. The hydrogen-to-carbon ratio of the equivalent hydrocarbon is 1.85:1.

*United States* means the States, the District of Columbia, the Commonwealth of Puerto Rico, the Commonwealth of the Northern Mariana Islands, Guam, American Samoa, and the U.S. Virgin Islands.

*Useful life* means the period during which a new engine is required to comply with all applicable emission standards. The standard-setting part defines the specific useful-life periods for individual engines.

*Variable-speed engine* means an engine that is not a constant-speed engine.

*Vehicle* means any vehicle, vessel, or type of equipment using engines to which this part applies. For purposes of this part, the term ''vehicle'' may include nonmotive machines or equipment such as a pump or generator.

*Verification* means to evaluate whether or not a measurement system's outputs agree with a range of applied reference signals to within one or more predetermined thresholds for acceptance. Contrast with ''calibration''.

*We (us, our)* means the Administrator of the Environmental Protection Agency and any authorized representatives.

*Zero* means to adjust an instrument so it gives a zero response to a zero calibration standard, such as purified nitrogen or purified air for measuring concentrations of emission constituents.

*Zero gas* means a gas that yields a zero response in an analyzer. This may either be purified nitrogen, purified air, a combination of purified air and purified nitrogen. For field testing, *zero gas* may include ambient air.

**§ 1065.1005 Symbols, abbreviations, acronyms, and units of measure.**

The procedures in this part generally follow the International System of Units (SI), as detailed in NIST Special Publication 811, 1995 Edition, ''Guide for the Use of the International System, of Units (SI),'' which we incorporate by reference in § 1065.1010. See § 1065.25 for specific provisions related to these conventions. This section summarizes the way we use symbols, units of measure, and other abbreviations.

(a) *Symbols for quantities.* This part uses the following symbols and units of measure for various quantities:

| Symbol | Quantity | Unit | Unit symbol | Base SI units |
|---|---|---|---|---|
| % | percent | 0.01 | % | $10^{-2}$ |
| $\alpha$ | atomic hydrogen to carbon ratio | mole per mole | mol/mol | 1 |
| A | area | square meter | $m^2$ | $m^2$ |
| $a_0$ | intercept of least squares regression. | | | |
| $a_1$ | slope of least squares regression. | | | |
| $\beta$ | ratio of diameters | meter per meter | m/m | 1 |
| $\beta$ | atomic oxygen to carbon ratio | mole per mole | mol/mol | 1 |
| $C^{\#}$ | number of carbon atoms in a molecule. | | | |
| D | diameter | meter | m | m |
| DF | dilution air fraction | mole per mol | mol/mol | 1 |
| $\varepsilon$ | error between a quantity and its reference. | | | |
| e | brake-specific basis | gram per kilowatt hour | g/(kW·h) | $g \cdot 3.6^{-1} \cdot 10^{6} \cdot m^{-2} \cdot kg \cdot s^{2}$ |
| F | F-test statistic. | | | |
| f | frequency | hertz | Hz | $s^{-1}$ |
| $f_n$ | rotational frequency (shaft) | revolutions per minute | rev/min | $2 \cdot pi \cdot 60^{-1} \cdot s^{-1}$ |
| $\gamma$ | ratio of specific heats | (joule per kilogram kelvin) per (joule per kilogram kelvin). | (J/(kg·K))/(J/(kg·K)) | 1 |
| K | correction factor | | | 1 |
| l | length | meter | m | m |
| $\mu$ | viscosity, dynamic | pascal second | Pa·s | $m^{-1} \cdot kg \cdot s^{-1}$ |
| M | molar mass[1] | gram per mole | g/mol | $10^{-3} \cdot kg \cdot mol^{-1}$ |
| m | mass | kilogram | kg | kg |
| $\dot{m}$ | mass rate | kilogram per second | kg/s | $kg \cdot s^{-1}$ |
| $\nu$ | viscosity, kinematic | meter squared per second | $m^2/s$ | $m^2 \cdot s^{-1}$ |
| N | total number in series. | | | |
| n | amount of substance | mole | mol | mol |
| $\dot{n}$ | amount of substance rate | mole per second | mol/s | $mol \cdot s^{-1}$ |
| P | power | kilowatt | kW | $10^3 \cdot m^2 \cdot kg \cdot s^{-3}$ |
| PF | penetration fraction. | | | |
| p | pressure | pascal | Pa | $m^{-1} \cdot kg \cdot s^{-2}$ |
| $\rho$ | mass density | kilogram per cubic meter | $kg/m^3$ | $kg \cdot m^{-3}$ |
| r | ratio of pressures | pascal per pascal | Pa/Pa | 1 |
| $r^2$ | coefficient of determination. | | | |
| $R_a$ | average surface roughness | micrometer | µm | $m^{-6}$ |
| $Re^{\#}$ | Reynolds number. | | | |
| RF | response factor. | | | |
| $\sigma$ | non-biased standard deviation. | | | |
| SEE | standard estimate of error. | | | |
| T | absolute temperature | kelvin | K | K |
| T | Celsius temperature | degree Celsius | °C | K − 273.15 |
| T | torque (moment of force) | newton meter | N·m | $m^2 \cdot kg \cdot s^{-2}$ |
| t | time | second | s | s |
| $\Delta t$ | time interval, period, 1/frequency | second | s | s |
| V | volume | cubic meter | $m^3$ | $m^3$ |
| $\dot{V}$ | volume rate | cubic meter per second | $m^3/s$ | $m^3 \cdot s^{-1}$ |
| W | work | kilowatt hour | kW·h | $3.6 \cdot 10^{-6} \cdot m^2 \cdot kg \cdot s^{-2}$ |
| x | amount of substance mole fraction[2] | mole per mole | mol/mol | 1 |
| $\bar{X}$ | flow-weighted mean concentration | mole per mole | mol/mol | 1 |
| y | generic variable. | | | |

[1] See paragraph (f)(2) of this section for the values to use for molar masses. Note that in the cases of $NO_X$ and HC, the regulations specify effective molar masses based on assumed speciation rather than actual speciation.

[2] Note that mole fractions for THC, THCE, NMHC, NMHCE, and NOTHC are expressed on a $C_1$ equivalent basis.

(b) *Symbols for chemical species.* This part uses the following symbols for chemical species and exhaust constituents:

| Symbol | Species |
|---|---|
| Ar | argon. |
| C | carbon. |
| $CH_4$ | methane. |
| $C_2H_6$ | ethane. |
| $C_3H_8$ | propane. |
| $C_4H_{10}$ | butane |
| $C_5H_{12}$ | pentane. |
| CO | carbon monoxide. |
| $CO_2$ | carbon dioxide. |
| H | atomic hydrogen |
| $H_2$ | molecular hydrogen. |
| $H_2O$ | water. |
| He | helium. |

| Symbol | Species |
|---|---|
| $^{85}Kr$ | krypton 85. |
| $N_2$ | molecular nitrogen. |
| NMHC | nonmethane hydrocarbon. |
| NMHCE | nonmethane hydrocarbon equivalent. |
| NO | nitric oxide. |
| $NO_2$ | nitrogen dioxide. |
| $NO_X$ | oxides of nitrogen. |
| NOTHC | nonoxygenated hydrocarbon. |
| $O_2$ | molecular oxygen. |
| OHC | oxygenated hydrocarbon. |
| $^{210}Po$ | polonium 210. |
| PM | particulate mass. |
| S | sulfur. |
| THC | total hydrocarbon. |
| $ZrO_2$ | zirconium dioxide. |

(c) *Prefixes.* This part uses the following prefixes to define a quantity:

| Symbol | Quantity | Value |
|---|---|---|
| μ | micro | $10^{-6}$ |
| m | milli | $10^{-3}$ |
| c | centi | $10^{-2}$ |
| k | kilo | $10^{3}$ |
| M | mega | $10^{6}$ |

(d) *Superscripts.* This part uses the following superscripts to define a quantity:

| Superscript | Quantity |
|---|---|
| overbar (such as $\bar{y}$). | arithmetic mean. |
| overdot (such as $\bar{y}$). | quantity per unit time. |

(e) *Subscripts.* This part uses the following subscripts to define a quantity:

| Subscript | Quantity |
|---|---|
| abs | absolute quantity. |
| act | actual condition. |
| air | air, dry |
| atmos | atmospheric. |
| cal | calibration quantity. |
| CFV | critical flow venturi. |
| cor | corrected quantity. |
| dil | dilution air. |
| dexh | diluted exhaust. |
| exh | raw exhaust. |
| exp | expected quantity. |
| i | an individual of a series. |
| idle | condition at idle. |
| in | quantity in. |
| init | initial quantity, typically before an emission test. |
| j | an individual of a series. |
| max | the maximum (i.e., peak) value expected at the standard over a test interval; not the maximum of an instrument range. |
| meas | measured quantity. |
| out | quantity out. |
| part | partial quantity. |
| PDP | positive-displacement pump. |
| ref | reference quantity. |
| rev | revolution. |
| sat | saturated condition. |
| slip | PDP slip. |
| span | span quantity. |
| SSV | subsonic venturi. |
| std | standard condition. |
| test | test quantity. |
| uncor | uncorrected quantity. |
| zero | zero quantity. |

(f) *Constants.* (1) This part uses the following constants for the composition of dry air:

| Symbol | Quantity | Mol/mol |
|---|---|---|
| $x_{Arair}$ | amount of argon in dry air. | 0.00934 |
| $x_{CO2air}$ | amount of carbon dioxide in dry air. | 0.000375 |
| $x_{N2air}$ | amount of nitrogen in dry air. | 0.78084 |
| $x_{O2air}$ | amount of oxygen in dry air. | 0.209445 |

(2) This part uses the following molar masses or effective molar masses of chemical species:

| Symbol | Quantity | g/mol ($10^{-3}$·kg·mol$^{-1}$) |
|---|---|---|
| $M_{air}$ | molar mass of dry air [1]. | 28.96559 |
| $M_{Ar}$ | molar mass of argon. | 39.948 |
| $M_C$ | molar mass of carbon. | 12.0107 |
| $M_{CO}$ | molar mass of carbon monoxide. | 28.0101 |
| $M_{CO2}$ | molar mass of carbon dioxide. | 44.0095 |
| $M_H$ | molar mass of atomic hydrogen. | 1.00794 |
| $M_{H2}$ | molar mass of molecular hydrogen. | 2.01588 |
| $M_{H2O}$ | molar mass of water. | 18.01528 |
| $M_{He}$ | molar mass of helium. | 4.002602 |
| $M_N$ | molar mass of atomic nitrogen. | 14.0067 |
| $M_{N2}$ | molar mass of molecular nitrogen. | 28.0134 |
| $M_{NMHC}$ | effective molar mass of nonmethane hydrocarbon [2]. | 13.875389 |
| $M_{NMHCE}$ | effective molar mass of nonmethane equivalent hydrocarbon [2]. | 13.875389 |
| $M_{NOX}$ | effective molar mass of oxides of nitrogen [3]. | 46.0055 |
| $M_O$ | molar mass of atomic oxygen. | 15.9994 |
| $M_{O2}$ | molar mass of molecular oxygen. | 31.9988 |
| $M_{C3H8}$ | molar mass of propane. | 44.09562 |
| $M_S$ | molar mass of sulfur. | 32.065 |
| $M_{THC}$ | effective molar mass of total hydrocarbon [2]. | 13.875389 |
| $M_{THCE}$ | effective molar mass of total hydrocarbon equivalent [2]. | 13.875389 |

[1] See paragraph (f)(1) of this section for the composition of dry air.

[2] The effective molar masses of THC, THCE, NMHC, and NMHCE are defined by an atomic hydrogen-to-carbon ratio, α, of 1.85.

[3] The effective molar mass of $NO_X$ is defined by the molar mass of nitrogen dioxide, $NO_2$.

(3) This part uses the following molar gas constant for ideal gases:

| Symbol | Quantity | J/(mol) · K) $(10)^{-3}$ ($m^2$·kg·$S^{-2}$ $mol^{-1}$· $K^{-1}$ |
|---|---|---|
| *R* | molar gas constant | 8.314472 |

(4) This part uses the following ratios of specific heats for dilution air and diluted exhaust:

| Symbol | Quantity | [J/(kg·K)]/[J/(kg·K)] |
|---|---|---|
| γair | ratio of specific heats for intake air or dilution air. | 1.399 |
| γdil | ratio of specific heats for diluted exhaust. | 1.399 |

| Symbol | Quantity | [J/(kg·K)]/[J/(kg·K)] |
|---|---|---|
| $\gamma_{exh}$ ..... | ratio of specific heats for raw exhaust. | 1.385 |

(g) *Other acronyms and abbreviations.* This part uses the following additional abbreviations and acronyms:

| | |
|---|---|
| ASTM | American Society for Testing and Materials. |
| BMD ... | bag mini-diluter. |
| BSFC .. | brake-specific fuel consumption. |
| CARB | California Air Resources Board. |
| CFR .... | Code of Federal Regulations. |
| CFV .... | critical-flow venturi. |
| CI ..... | compression-ignition. |
| CLD .... | chemiluminescent detector. |
| CVS .... | constant-volume sampler. |
| DF ..... | deterioration factor. |
| ECM ... | electronic control module. |
| EFC .... | electronic flow control. |
| EGR ... | exhaust gas recirculation. |
| EPA .... | Environmental Protection Agency. |
| FID ..... | flame-ionization detector. |
| IBP ..... | initial boiling point. |
| ISO ..... | International Organization for Standardization. |
| LPG .... | liquefied petroleum gas. |
| NDIR .. | nondispersive infrared. |
| NDUV | nondispersive ultraviolet. |
| NIST ... | National Institute for Standards and Technology. |
| PDP .... | positive-displacement pump. |
| PEMS | portable emission measurement system. |
| PFD .... | partial-flow dilution. |
| PMP ... | Polymethylpentene. |
| pt. ..... | a single point at the mean value expected at the standard. |
| PTFE .. | polytetrafluoroethylene (commonly known as Teflon™). |
| RE ..... | rounding error. |
| RMC ... | ramped-modal cycle. |
| RMS ... | root-mean square. |
| RTD .... | resistive temperature detector. |
| SSV .... | subsonic venturi. |
| SI ..... | spark-ignition. |
| UCL .... | upper confidence limit. |
| UFM ... | ultrasonic flow meter. |
| U.S.C. | United States Code. |

**§ 1065.1010 Reference materials.**

Documents listed in this section have been incorporated by reference into this part. The Director of the Federal Register approved the incorporation by reference as prescribed in 5 U.S.C. 552(a) and 1 CFR part 51. Anyone may inspect copies at the U.S. EPA, Air and Radiation Docket and Information Center, 1301 Constitution Ave., NW., Room B102, EPA West Building, Washington, DC 20460 or at the National Archives and Records Administration (NARA). For information on the availability of this material at NARA, call 202–741–6030, or go to: *http://www.archives.gov/federal_register/code_of_federal_regulations/ibr_locations.html.*

(a) *ASTM material.* Table 1 of this section lists material from the American Society for Testing and Materials that we have incorporated by reference. The first column lists the number and name of the material. The second column lists the sections of this part where we reference it. Anyone may purchase copies of these materials from the American Society for Testing and Materials, 100 Barr Harbor Dr., P.O. Box C700, West Conshohocken, PA 19428 or *www.astm.com.* Table 1 follows:

TABLE 1 OF § 1065.1010.—ASTM MATERIALS

| Document number and name | Part 1065 reference |
|---|---|
| ASTM D 86–04b, Standard Test Method for Distillation of Petroleum Products at Atmospheric Pressure | 1065.703, 1065.710 |
| ASTM D 93–02a, Standard Test Methods for Flash Point by Pensky-Martens Closed Cup Tester | 1065.703 |
| ASTM D 287 92 (Reapproved 2000), Standard Test Method for API Gravity of Crude Petroleum and Petroleum Products (Hydrometer Method) | 1065.703 |
| ASTM D 323–99a, Standard Test Method for Vapor Pressure of Petroleum Products (Reid Method) | 1065.710 |
| ASTM D 445–04, Standard Test Method for Kinematic Viscosity of Transparent and Opaque Liquids (and the Calculation of Dynamic Viscosity) | 1065.703 |
| ASTM D 613–03b, Standard Test Method for Cetane Number of Diesel Fuel Oil | 1065.703 |
| ASTM D 910–04a, Standard Specification for Aviation Gasolines | 1065.701 |
| ASTM D 975–04c, Standard Specification for Diesel Fuel Oils | 1065.701 |
| ASTM D 1266–98 (Reapproved 2003), Standard Test Method for Sulfur in Petroleum Products (Lamp Method) | 1065.710 |
| ASTM D 1267–02, Standard Test Method for Gage Vapor Pressure of Liquefied Petroleum (LP) Gases (LP-Gas Method) | 1065.720 |
| ASTM D 1319–03, Standard Test Method for Hydrocarbon Types in Liquid Petroleum Products by Fluorescent Indicator Adsorption | 1065.710 |
| ASTM D 1655–04a, Standard Specification for Aviation Turbine Fuels | 1065.701 |
| ASTM D 1837–02a, Standard Test Method for Volatility of Liquefied Petroleum (LP) Gases | 1065.720 |
| ASTM D 1838–03, Standard Test Method for Copper Strip Corrosion by Liquefied Petroleum (LP) Gases | 1065.720 |
| ASTM D 1945–03, Standard Test Method for Analysis of Natural Gas by Gas Chromatography | 1065.715 |
| ASTM D 2158–04, Standard Test Method for Residues in Liquefied Petroleum (LP) Gases | 1065.720 |
| ASTM D 2163–91 (Reapproved 1996), Standard Test Method for Analysis of Liquefied Petroleum (LP) Gases and Propene Concentrates by Gas Chromatography | 1065.720 |
| ASTM D 2598–02, Standard Practice for Calculation of Certain Physical Properties of Liquefied Petroleum (LP) Gases from Compositional Analysis | 1065.720 |
| ASTM D 2622–03, Standard Test Method for Sulfur in Petroleum Products by Wavelength Dispersive X-ray Fluorescence Spectrometry | 1065.703 |
| ASTM D 2713–91 (Reapproved 2001), Standard Test Method for Dryness of Propane (Valve Freeze Method) | 1065.720 |
| ASTM D 2784–98 (Reapproved 2003), Standard Test Method for Sulfur in Liquefied Petroleum Gases (Oxy-Hydrogen Burner or Lamp) | 1065.720 |
| ASTM D 2880–03, Standard Specification for Gas Turbine Fuel Oils | 1065.701 |
| ASTM D 2986–95a (Reapproved 1999), Standard Practice for Evaluation of Air Assay Media by the Monodisperse DOP (Dioctyl Phthalate) Smoke Test | 1065.170 |
| ASTM D 3231–02, Standard Test Method for Phosphorus in Gasoline | 1065.710 |
| ASTM D 3237–02, Standard Test Method for Lead in Gasoline By Atomic Absorption Spectroscopy | 1065.710 |
| ASTM D 4814–04b, Standard Specification for Automotive Spark-Ignition Engine Fuel | 1065.701 |
| ASTM D 5186–03, Standard Test Method for Determination of the Aromatic Content and Polynuclear Aromatic Content of Diesel Fuels and Aviation Turbine Fuels By Supercritical Fluid Chromatography | 1065.703 |
| ASTM D 5797–96 (Reapproved 2001), Standard Specification for Fuel Methanol (M70–M85) for Automotive Spark-Ignition Engines | 1065.701 |

TABLE 1 OF § 1065.1010.—ASTM MATERIALS—Continued

| Document number and name | Part 1065 reference |
|---|---|
| ASTM D 5798–99 (Reapproved 2004), Standard Specification for Fuel Ethanol (Ed75–Ed85) for Automotive Spark-Ignition Engines | 1065.701 |
| ASTM D 6615–04a, Standard Specification for Jet B Wide-Cut Aviation Turbine Fuel | 1065.701 |
| ASTM D 6751–03a, Standard Specification for Biodiesel Fuel Blend Stock (B100) for Middle Distillate Fuels | 1065.701 |
| ASTM D 6985–04a, Standard Specification for Middle Distillate Fuel Oil Military Marine Applications | 1065.701 |
| ASTM F 1471–93 (Reapproved 2001), Standard Test Method for Air Cleaning Performance of a High-Efficiency Particulate Air Filter System | 1065.1001 |

(b) *ISO material.* Table 2 of this section lists material from the International Organization for Standardization that we have incorporated by reference. The first column lists the number and name of the material. The second column lists the section of this part where we reference it. Anyone may purchase copies of these materials from the International Organization for Standardization, Case Postale 56, CH–1211 Geneva 20, Switzerland or *www.iso.org.* Table 2 follows:

TABLE 2 OF § 1065.1010.—ISO MATERIALS

| Document number and name | Part 1065 reference |
|---|---|
| ISO 14644–1, Cleanrooms and associated controlled environments | 1065.190 |

(c) *NIST material.* Table 3 of this section lists material from the National Institute of Standards and Technology that we have incorporated by reference. The first column lists the number and name of the material. The second column lists the section of this part where we reference it. Anyone may purchase copies of these materials from the Government Printing Office, Washington, DC 20402 or download them free from the Internet at *www.nist.gov.* Table 3 follows:

TABLE 3 OF § 1065.1010. NIST MATERIALS

| Document number and name | Part 1065 reference |
|---|---|
| NIST Special Publication 811, 1995 Edition, Guide for the Use of the International System of Units (SI), Barry N. Taylor, Physics Laboratory | 1065.20, 1065.1001, 1065.1005 |
| NIST Technical Note 1297, 1994 Edition, Guidelines for Evaluating and Expressing the Uncertainty of NIST Measurement Results, Barry N. Taylor and Chris E. Kuyatt | 1065.1001 |

(d) *SAE material.* Table 4 of this section lists material from the Society of Automotive Engineering that we have incorporated by reference. The first column lists the number and name of the material. The second column lists the sections of this part where we reference it. Anyone may purchase copies of these materials from the Society of Automotive Engineers, 400 Commonwealth Drive, Warrendale, PA 15096 or *www.sae.org.* Table 4 follows:

TABLE 4 OF § 1065.1010. SAE MATERIALS

| Document number and name | Part 1065 reference |
|---|---|
| "Optimization of Flame Ionization Detector for Determination of Hydrocarbon in Diluted Automotive Exhausts," Reschke Glen D., SAE 770141 | 1065.360 |
| "Relationships Between Instantaneous and Measured Emissions in Heavy Duty Applications," Ganesan B. and Clark N. N., West Virginia University, SAE 2001–01–3536 | 1065.309 |

(e) *California Air Resources Board material.* Table 5 of this section lists material from the California Air Resources Board that we have incorporated by reference. The first column lists the number and name of the material. The second column lists the sections of this part where we reference it. Anyone may get copies of these materials from the California Air Resources Board 9528 Telstar Ave., El Monte, California 91731. Table 5 follows:

TABLE 5 OF § 1065.1010. CALIFORNIA AIR RESOURCES BOARD MATERIALS

| Document number and name | Part 1065 reference |
|---|---|
| "California Non-Methane Organic Gas Test Procedures," Amended July 30, 2002, Mobile Source Division, California Air Resources Board | 1065.805 |

[FR Doc. 05–11534 Filed 7–12–05; 8:45 am]

**BILLING CODE 6560–50–U**