(202) 366–2992 and by fax at (202) 366–3820.

You may send mail to both of these officials at the National Highway Traffic Safety Administration, 400 Seventh St., SW., Washington, DC 20590.

SUPPLEMENTARY INFORMATION: On May 19, 2005, the agency published in the **Federal Register** a notice of proposed rulemaking (NPRM) to amend Federal Motor Vehicle Safety Standard (FMVSS) No. 208, *Occupant crash protection* (70 FR 28878). We proposed test procedures applicable to vehicles that have a child restraint anchorage system, commonly referred to as a ''LATCH'' system, in a front passenger seating position and that comply with advanced air bag requirements through the use of a suppression system. Beginning September 1, 2006, these vehicles must suppress the air bag in the presence of a child restraint system that is attached to the vehicle's LATCH system. The procedures proposed in the NPRM specify a repeatable, reproducible, and realistic method of attaching child restraints to the LATCH system for the suppression test.

The proposed procedure was developed by NHTSA to replicate real-world CRS installations in vehicles by experienced installers, particularly with respect to the appropriate load vector to be applied and the amount of load relief when LATCH belts are manually tightened. The procedure was developed using four installers working with three vehicles and four CRSs. The agency prepared a technical report detailing this development. The NPRM was published May 19, 2005, and open for a 60-day comment period. However, public availability of the technical report was delayed until after the comment period had started.

On June 20, 2005, we received a letter from the Alliance of Automobile Manufacturers (Alliance) [1] requesting an extension of the comment period. The Alliance stated that because of the delay it is not able to adequately review the technical report and prepare comments by the close of comment period. Further, the Alliance stated that some of the illustrations in the technical report were not legible. The Alliance therefore requested a short extension of the comment period.

As stated in the NPRM, the proposed procedure is for child restraint systems to which vehicles must certify under the suppression requirements, beginning September 1, 2006. Consequently, we believe the 30-day extension of the comment period will not adversely affect safety. Further, we believe that providing additional time for review of the technical report will result in more helpful comments. We note that the technical report has been resubmitted to the docket with legible illustrations.

Privacy Act: Anyone is able to search the electronic form of all submissions received into any of our dockets by the name of the individual submitting the comment or petition (or signing the comment or petition, if submitted on behalf of an association, business, labor union, etc.). You may review DOT's complete Privacy Act Statement in the **Federal Register** published on April 11, 2000 (volume 65, number 70; pages 19477–78), or you may visit *http://dms.dot.gov.*

Authority: 49 U.S.C. 322, 30111, 30115, 30117, and 30166; delegation of authority at 49 CFR 1.50.

Issued on July 8, 2005.

Stephen R. Kratzke,

Associate Administrator for Rulemaking.

[FR Doc. 05–13760 Filed 7–12–05; 8:45 am]

BILLING CODE 4910–59–P

[1] The Alliance is a trade association of nine automobile manufacturers, including BMW Group, DaimlerChrysler, Ford Motor Company, General Motors, Mazda, Mitsubishi Motors, Porsche, Toyota, and Volkswagen.

DEPARTMENT OF TRANSPORTATION

National Highway Traffic Safety Administration

49 CFR Part 572

[Docket No. NHTSA–2004–21247]

RIN 2127–AJ49

Anthropomorphic Test Devices; Hybrid III–10 Year Old Child Test Dummy

AGENCY: National Highway Traffic Safety Administration (NHTSA), Department of Transportation (DOT).

ACTION: Notice of proposed rulemaking (NPRM).

SUMMARY: Today's NPRM proposes specifications and qualification requirements for the new test dummy that is representative of a 10-year-old child. NHTSA plans to use the new 10-year-old child test dummy to test child restraints under Federal Motor Vehicle Safety Standard No. 213 and in other applications. The dummy has the capability to be placed in a slouched posture, which allows the evaluation of vehicle belt systems under real world occupant conditions.

DATES: You should submit your comments early enough to ensure that Docket Management receives them not later than September 12, 2005.

ADDRESSES: You may submit comments (identified by the DOT DMS Docket Number) by any of the following methods:

- Web Site: *http://dms.dot.gov.* Follow the instructions for submitting comments on the DOT electronic docket site.
- Fax: 1–202–493–2251.
- Mail: Docket Management Facility; U.S. Department of Transportation, 400 Seventh Street, SW, Nassif Building, Room PL–401, Washington, DC 20590–001.
- Hand Delivery: Room PL–401 on the plaza level of the Nassif Building, 400 Seventh Street, SW., Washington, DC, between 9 am and 5 pm, Monday through Friday, except Federal Holidays.
- Federal eRulemaking Portal: Go to *http://www.regulations.gov.* Follow the online instructions for submitting comments.

Instructions: All submissions must include the agency name and docket number or Regulatory Identification Number (RIN) for this rulemaking. For detailed instructions on submitting comments and additional information on the rulemaking process, see the Public Participation heading of the **SUPPLEMENTARY INFORMATION** section of this document. Note that all comments received will be posted without change to *http://dms.dot.gov,* including any personal information provided. Please see the Privacy Act discussion under the Public Participation heading.

Docket: For access to the docket to read background documents or comments received, go to *http://dms.dot.gov* at any time or to Room PL–401 on the plaza level of the Nassif Building, 400 Seventh Street, SW., Washington, DC, between 9 am and 5 pm, Monday through Friday, except Federal Holidays.

FOR FURTHER INFORMATION CONTACT: For non-legal issues, you may call Stan Backaitis, NHTSA Office of Crashworthiness Standards (telephone 202–366–4912). For legal issues, you may call Chris Calamita, NHTSA Office of Chief Counsel (telephone 202–366–2992). You may send mail to these officials at the National Highway Traffic Safety Administration, 400 Seventh St., SW., Washington, DC 20590.

SUPPLEMENTARY INFORMATION:

Table of Contents

I. Anton's Law
II. Overview
III. Background
  A. Need for the dummy
  B. Evolution of the dummy
IV. General Description

A. Biofidelic consistency of the HIII 10-year-old dummy with the Hybrid III 50th percentile component responses
B. Repeatability and reproducibility
C. Component tests
D. Sled tests
V. The Dummy's Response Sensitivity and Structural Durability
A. Sensitivity of responses to booster seat design
B. Sensitivity of response to dummy's posture
C. Sensitivity of the dummy in three point belt applications
D. Sensitivity of dummy response and durability in NCAP pulse and different restraint systems
E. Dummy performance in OOP Environment
1. Test Set-Up
2. General Observations
3. Neck Durability
4. Response Differences Due to Dummy Makes
5. Dummy Positioning
VI. Proposed Calibration Tests
A. Head drop specification
B. Neck pendulum test
C. Knee impact
D. Thorax impact
E. Torso flexion
VII. Benefits and Costs
VIII. Public Participation
IX. Rulemaking Analyses and Notices

I. Anton's Law

On December 4, 2002, the President signed Pub. L. 107–318, ''Anton's Law,'' in order ''to provide for the improvement of the safety of child restraints in passenger motor vehicles, and other purposes.'' Section 4 of Anton's Law directed that:

(a) Not later than 24 months after the date of the enactment of this Act, the Secretary [of Transportation] shall develop and evaluate an anthropomorphic test device that simulates a 10-year-old child for use in testing child restraints used in passenger motor vehicles;

(b) Within 1 year following the development and evaluation carried out under subsection (a), the Secretary shall initiate a rulemaking proceeding for the adoption of anthropomorphic test device as developed under subsection (a).

In September 2004, the agency completed evaluation of the HIII–10C and tentatively determined that it is suitable for use in testing child restraints.

II. Overview

Today's NPRM proposing to adopt specifications and performance criteria for the HIII–10C into 49 CFR Part 572 initiates the rulemaking referenced in Section 4(b) of Anton's Law. The test dummy is based on recent growth charts for U.S. children and scaled measurements from the Hybrid III family of dummies. The Hybrid III 10-year-old test dummy (referred to as the ''HIII–10C'') has a seated height of 2 feet 5 inches, a standing height of 4 feet 3 inches, and weighs 77.6 pounds (35 kilograms). By seated height and weight it very closely approximates the average 10-year-old child in the U.S. Additionally, the HIII–10C has been designed to more closely replicate the posture of older children than current Hybrid III test dummies, which can enable the dummy to more closely replicate older children interacting with seat belt systems. The HIII–10C has an adjustable lumbar spine that allows the dummy to slouch and a shoulder construction that provides a more representative interaction of the shoulder and shoulder belt.

Consideration is underway at NHTSA on using the HIII–10C in compliance tests of child restraints under Federal Motor Vehicle Safety Standard (FMVSS) No. 213, ''Child restraint systems'' (49 CFR 571.213). The agency is proposing to expand the applicability of the standard to restraints recommended for children weighing up to 80 pounds (36 kilograms). The proposed amendment to FMVSS No. 213 is intended to ensure that all child restraint systems, including booster seats, are robustly assessed to make sure that they would perform soundly in a 30 mile per hour (mph) crash when used by children at the upper limit of their recommended weight range (*e.g.*, up to 80 lb). The agency tentatively believes that the dummy is a sound test device that will provide valuable data in assessing the potential for injury of child restraint system (CRS) occupants that weigh more than 50 lb in a 30 mph crash.

III. Background

A. Need for the Dummy

The agency has long recognized the need for a test dummy representative of a child larger than that currently represented by the Hybrid III 6-year-old test dummy (HIII–6YO). Some child restraint manufacturers began offering child restraints for children weighing 50 lb and greater. The agency has wanted to expand the applicability of FMVSS No. 213 to increase the likelihood that child restraints will provide robust protection for a wider array of children. This interest goes hand-in-hand with efforts to increase booster seat use among children who have outgrown their harness-equipped child safety seat, but who cannot adequately fit a vehicle's lap and shoulder belt system. (The agency advises that children between the ages of 4-to 8-years of age should remain in a belt-positioning booster seat and secured with a vehicle's lap/shoulder belt, unless they are a minimum 4 feet and 9 inches tall.)

Agency reports have indicated that older children do not fit properly into vehicle safety belt systems without the use of a child restraint system (*e.g.*, a belt-positioning booster seat). This poor fit is due to the fact that children have highly sloped shoulders and tend to sit slouched in vehicle seats because their legs are too short to maintain an upright seat posture. In a crash, slouched child show a tendency to ''submarine;'' *i.e.*, the child may slide under the lap belt, which in most cases causes the lap belt to load the abdomen, while the shoulder belt may migrate into the child's upper neck area. In such an event a child would be exposed to forces that could result in serious abdomen, lumbar and cervical spine injuries.

Use of a belt-positioning booster seat improves the fit of a vehicle's lap/shoulder belt system for children 10 years of age and younger. In conjunction with a vehicle's lap/shoulder belt, a belt-positioning booster provides a 5-to 8-year-old child with the same level of safety as a 9-to 14-year-old child receives from use of a lap/shoulder belt only. When used in conjunction with a booster seat, the effectiveness of a lap/shoulder belt for a child between the ages of 5 and 8 years improves from 48 percent to 54 percent.[1]

Adding a new child test dummy to the array of devices used to test child restraints will enhance child passenger safety. Currently, the oldest child represented by an instrumented dummy in FMVSS No. 213 is a 6-year-old child. The agency has tentatively determined that the HIII–10C will permit a useful evaluation of booster seats that are recommended for children weighing up to 80 lb (36 kg), and help ensure that these restraints meet the dynamic test requirements of FMVSS No. 213.

B. Evolution of the Dummy

In 1994, the agency began to investigate if the introduction of a test dummy larger than the 6-year-old test dummy would benefit the development of safety improvements in occupant restraint systems. Initially, the agency considered the P10 test dummy, which is part of the P series of test dummies used primarily in Europe. The P10 was intended to replicate the size and weight of a 10-year-old child. However, the agency had concerns with the

[1] *See*, ''Effectiveness of Lap/Shoulder Belts in the Back Outboard Seating Positions,'' Evaluation Division, Plans and Policy, NHTSA. Washington, DC, June 1999. DOT HS 808 945.

stability and predictability of the P10's kinematic structure, its limited instrumentation capabilities, and the fact that it weighs 10 lbs. less than the average 10-year-old child. As a result of these concerns, the agency decided against using the P10.

The agency initiated discussions in 1999 with the Hybrid III Dummy Family Task Group (DFTG) at the Society of Automotive Engineers (SAE) on the need to develop a child type test dummy approximating the average 10-year-old. DFTG noted that such a dummy would be useful in the evaluation of booster seats and the injury causing potential of passenger side air bags, and agreed to develop a Hybrid III 10-year-old dummy.[2] By the spring of 2001 the first prototype was constructed under a collaborative effort between dummy manufacturers First Technology Safety Systems (FTSS) and Denton ATD (Denton).[3] After preliminary testing and minor modifications, the agency was furnished a production prototype of the DFTG-approved dummy for its initial assessment. Subsequently, the agency bought two dummies for more rigorous testing and evaluation.

During the development of the 10-year-old dummy, the Transportation Recall Enhancement, Accountability, and Documentation (TREAD) Act (Pub. L. 106–414, November 1, 2000) was signed. The TREAD Act in part directed that the agency determine whether the safety of children would be improved if additional anthropomorphic test devices were used, including a test dummy representative of a 10-year-old dummy. NHTSA updated Federal Motor Vehicle Safety Standard (FMVSS) No. 213 in response to the TREAD Act (68 FR 37620; June 24, 2003; Docket No. 15351), but the 10-year-old dummy was not sufficiently developed for inclusion in that rulemaking.

IV. General Description

The HIII–10C was targeted to represent a 10-year-old child as defined by the National Center for Health Statistics for the Center for Disease Control (NCHS–CDC) growth charts published in December 2000 for children between 2 and 20 years of age and has the same general construction as the adult dummies of the Hybrid III dummy family. The HIII–10C has a seated height of 2 feet 5 inches, a weight of 77.6 pounds, and a standing height of 4 feet 3 inches. Table I below compares the major characteristics of the dummy with the U.S. growth charts.

TABLE I.—COMPARISON OF TEST DUMMIES AND PEOPLE

	Seated Height**, **** (feet & inches)		H–III	Weight (lb)*, ****		Standing Height (feet & inches)*, ***, ****
	H–III	People (min/ave/max)		People (min/ave/max)	H–III	People (min/ave/max)
5th Percentile Female	2′7″	(2′4″/2′7″/2′9″)	108	(101/106/117)	4′11″	(4′8″4′11″/5′1″)
10-year-old	2′5″	(2′2″/2′4″/2′6″)	77.6	(57.7/79.3/120.2)	4′3″	(4′4″/4′8″/5′1″)
6-year-old	2′1″	(1′10″/2′0″/2′2″)	51.6	(37.2/47.2/75.5)	3′9″	(3′7″/3′11″/4′3″)

* Data from CDC Growth Charts (1988–1994), U.S. Department of Health and Human Services, Centers for Disease Control and Prevention, December 4, 2000.
** Anthropometry of U.S. Infants and Children, SAE SP–394, 1975 SAE Automotive Engineering Congress and Exhibition, Detroit, MI, 1975. ′
*** Erect posture; calculated, rounded to the nearest whole number (dummies are built in seated posture).
**** Average of male and female.

Table I demonstrates that the HIII–10C fits reasonably well between the 6-year-old and 5th percentile adult female test dummies. (A 5th percentile adult female is about the size of a 12-year-old.)

Additional anthropomorphic dimensions and masses of the HII–10C were based on scaling those specifications from the HIII 50th percentile adult male dummy rather than the 5th percentile female dummy. The decision to scale down from the male dummy was based on the fact that the 50th percentile male dummy was supported by a well established biomechanical database, while all other Hybrid III dummies were scaled down versions from the 50th percentile male dummy. Accordingly, there was no advantage to scale down from another dummy.

Information on the HIII–10C key exterior dimensions and weights for the major body sections are included in the drawing package, which is included in the docket for this notice.

Similar to the construction of adult dummies in the Hybrid III family, the 10-year-old dummy consists of an articulated, damped steel ''skeleton'' that is covered by foam and plastic simulating human flesh and skin. However, the lumbar spine is constructed of a butyl rubber cylinder with an adjusting bracket located between the lumbar spine and pelvis bone. This adjusting bracket allows for upper torso orientation adjustment of approximately 24 degrees relative to the lower torso to simulate a range of normal and ''slouched'' seating positions. Slouch is a critical design feature, because children not in booster seats tend to slouch to keep the underside of their knees from interfering with the front edge of a vehicle seat as their legs bend over the edge of the seat. As explained above, this slouched posture has the potential to result in abdominal and neck injuries from a vehicle's lap and shoulder belt in a crash. The slouched position would allow the HIII–10C to provide data on the interaction of a vehicle belt system and older children seated in this posture.

The specifications for the HIII–10C would consist of: (a) A drawing package containing all of the technical details of the dummy; (b) a parts list; and (c) a user manual containing instructions for inspection, assembly, disassembly, use, and adjustments of dummy components (PADI). These drawings and specifications would ensure that the dummies would be the same in their design, construction, and kinematics. In addition, three-dimensional engineering aids are available from the NHTSA website for complex dummy part dimensions. While these aids are not part of this specification, they can be used by the public for reference purposes. The performance calibration

[2] H.J. Mertz, *et al.*, ''The Hybrid III 10-Year-Old Dummy,'' #2001–22–0014, Proceedings, Stapp Car Crash Conference, Vol. 45, November 2001, The Stapp Association.

[3] FTSS manufactured the head, neck, upper extremities, and upper torso of the prototype. Denton manufactured the lower half of the dummy, including the pelvis and lower extremities. Subsequently, the manufacturers have exchanged drawings allowing each one to manufacture a complete dummy.

tests proposed in this NPRM would serve to assure that the HIII–10C responses are within the established biomechanical corridors and further assure the uniformity of dummy assembly, structural integrity, consistency of response and adequacy of instrumentation. As a result, the repeatability of the dummy's impact response would be ensured.

Drawings and specifications for the HIII–10C are available for examination in the NHTSA docket section. Copies of those materials and the user manual may also be obtained from Leet-Melbrook, Division of New RT, 18810 Woodfield Road, Gaithersburg, MD 20879, tel. (301) 670–0090.

A technical report and other materials describing the HIII–10C in detail have been placed in the docket for today's NPRM.

A. Biofidelic Consistency of the HIII 10-Year-Old Dummy With the Hybrid III 50th Percentile Component Responses

An important characteristic of a dummy for use as a test tool is how well it simulates a human undergoing impact, a property otherwise known as biofidelity. For adult sized dummies such as the Hybrid III 50th percentile male, the component responses can be compared directly to post-mortem human subject (PMHS) response data to assess biofidelity. Due to the scarcity of biomechanical data for children, response corridors for child dummies have to be constructed by scaling adult PMHS data, using geometric factors such as mass and length. Given the current lack of pediatric data, if it is accepted that the HIII 50th percentile male dummy has adequate biofidelity,[4] the biofidelity of the HIII–10C can be assessed by comparing the child dummy responses to response specification data (certification data) scaled from the adult dummy.

Following this approach, the SAE DFTG examined the response of the HIII–10C head, neck, thorax and knee and determined that prototype HIII–10C components displayed an acceptable level of biofidelity with respect to the scaled corridors.[5] Scaling relationships developed by Irwin and Mertz[6] were used by NHTSA to define the biomechanical response corridors of the HIII–10C as compared to the HIII 50th percentile male data. Following the International Standard Organization (ISO) TR 9790 biofidelity scaling procedure,[7] the head and knee of the dummy could be given a rating of 10, and the neck and thorax a rating of 5, indicating that no components have unacceptable biofidelity. This methodology yields an overall biofidelity assessment of ''excellent'' which is in agreement with the DFTG assessment.

The NHTSA Bio Rank System[8] was applied to HIII–10C dummy component peak responses from testing at VRTC[9] for the head, neck, thorax, and knees to quantify how well they fit within their respective certification corridors derived from scaling. The dummy's cumulative variance (DCV) was calculated as the absolute value of the difference between the mean dummy peak response and mean value from the scaled certification corridor for each individual measurement. The cadaver cumulative variance (CCV), normally the accumulated standard deviation of a sample of human data, was modified to be one-fourth of the tolerance presented in the scaled 50th certification corridor. This assumes that the certification corridor is the mean plus or minus two standard deviations:[10]

$$\frac{DCV}{CCV} = \frac{\left|m_{dummy} - m_{scaled50th}\right|}{s_{scaled50th}}$$

A DCV/CCV value of 2.0 or below indicates that particular HIII–10C component response is within two standard deviations of the HIII–50th scaled data. In other words, the next HIII–10C component can be considered to respond as much like the scaled data as a HIII–50th component would match the corresponding adult corridor. Table II summarizes the DCV/CCV values for each component measurement.

TABLE II.—DCV/CCV VALUES FOR HIII–10C COMPONENT RESPONSES IN VRTC TESTS

Component	Dummy data (N=2)		Scaled corridor		DCV/CCV
	Mean	Std dev	Mean	Std dev	
Head:					
Resultant (g)	277	6	267.5	13.75	0.69
Neck Flexion:					
Moment (Nm)	54.8	1.9	58	3.5	0.91
Rotation (deg)	81.7	2	81	3.5	0.20
Neck Extension:					
Moment (Nm)	41.5	1.9	41	3	0.17
Rotation (deg)	107.7	2.7	106.3	3.7	0.36
Thorax:					
Deflection (mm)	45.8	1	43	2	1.40
Force (N)	2202	107	2080	25	0.98
Hysteresis (%)	74.2	1.5	75	5	0.40
Knee:					
Force (N)	2819	106	2850	145	0.21

As seen in Table II, all nine of the HIII–10C component responses based on two dummies had DCV/CCV values below 2.0 (in fact, all but the thorax had values less than 1.0), indicating that each response is within 2 standard

[4] Foster, *et al.* (1977). ''Hybrid III—A Biomechanically-Based Crash Test Dummy,'' Proc. Twenty-First Stapp Car Crash Conference, SAE 770938. Society of Automotive Engineers, Warrendale, PA.

[5] Mertz, *et al.*, (2001). ''The Hybrid III 10-Year-Old Dummy,'' Proc. Forty-Fifth Stapp Car Crash Conference, Paper 2001–22–0014.

[6] Irwin and Mertz (1997), ''Biomechanical Bases for the CRABI and Hybrid III Child Dummies,'' Proceedings, 41st Stapp Car Crash Conference, SAE 973317, SAE, Warrendale, PA.

[7] Scherer *et al.*, Proceedings, 42nd Stapp Car Crash Conference, SAE 983151, SAE, Warrendale, PA.

[8] Rhule, *et al.*, (2002). ''Development of a New Biofidelity Ranking System for Anthropomorphic Test Devices,'' Proc. 46th Stapp Car Crash Conference, Paper 2002–22–0024.

[9] Stammen, J. ''Technical Evaluation of the Hybrid III Ten Year Old Dummy (HIII–10C),'' September 2004.

[10] Rhule, ibid.

deviations of the mean of the HIII–10C scaled corridors. As noted earlier, there is no human pediatric data for direct HIII–10C dummy biofidelity evaluation. However, because the HIII–10C components are consistent with the HIII–50th components and Foster (*id.*) showed that the HIII–50th components were consistent with human component response data, NHTSA believes that the components of this dummy have acceptable biofidelity.[11]

B. Repeatability and Reproducibility

A dummy's repeatability[12] and reproducibility[13] are typically based on the performance of the most critical body segments, as components and as a complete dummy system. A dummy and its components must respond within boundaries that relate to biomechanical corridors. In the tests for repeatability and reproducibility, impact input as well as the test equipment are carefully controlled to minimize external effects on a dummy's response. Component tests are typically better controlled and thus produce more reliable estimates of the dummy's repeatability and reproducibility than is possible in sled and vehicle tests. Component tests identify whether a component will respond properly in impact tests. Sled tests, on the other hand, offer a method of efficiently evaluating a dummy as a complete system in an environment much like a vehicle test. Sled tests establish the consistency of the dummy's kinematics, its impact response as an assembly, and the integrity of a dummy's structure and instrumentation under controlled and crash-representative test conditions.

The repeatability and reproducibility of dummy responses are assessed by coefficient of variation (cv) values of impact responses (coefficient of variation = standard deviation divided by the mean). This approach was introduced for automotive dummy assessment in 1974 at the Third International Conference of Occupant Protection (154 FR 369, August 9, 1975) as a means of evaluating dummy repeatability. The repeatability assessment specifies that the dummy's response must fall within specified performance limits and that it does not exceed a CV value of 10% in repeated identical impact exposures. Reproducibility is a statistical assessment of compiled responses of multiple dummies in a duplicated impact environment. Multiple dummies produce a wider dispersion of response measurement than in testing a single dummy for repeatability. Accordingly, a CV of 15% for reproducibility is being proposed as a practical limit for maximum allowable variance in repeated tests of multiple dummies, as long as any single dummy within that set conforms to the 10% repeatability requirement.

C. Component Tests

The critical body segments were evaluated by conducting certification tests on the head, neck, thorax, torso, and knee. These tests were conducted in accordance with the procedure specified in the most recent version of the DFTG's user manual developed for the HIII–10C. Components from a dummy manufactured by FTSS and those from a dummy manufactured by Denton were tested prior to and after a series of sled tests. The CV values used to assess the quality of repeatability and reproducibility are provided in Table III.

TABLE III.—DUMMY RATING SCORES FOR REPEATABILITY AND REPRODUCIBILITY

Repeatability % CV	Reproducibility % CV	Rating
0–5	0–6	Excellent.
>5–8	>6–11	Good.
>8–10	>11–15	Marginal.
>10	>15	Poor.

For each of the dummies, the head, neck, knee and thorax all responded with a rating of excellent in the repeatability and the reproducibility evaluations.

The repeatability values from the torso evaluation were acceptable with CV values below 10 percent, except that data in one channel from the reproducibility evaluation narrowly missed an ''acceptable'' value. Torso flexion tests were conducted on both dummies before and after the sled test series per the procedure defined in CFR Part 572, Subpart O (Hybrid III 5th Percentile Female Dummy), except that the resistance force was measured at 35 degrees of torso flexion instead of 45 degrees. The smaller size of the HIII–10C and the pelvis angle required for slouching prohibited the test dummy from achieving an angle of 45 degrees. The reproducibility value for the resistance force at 35 degrees of torso flexion was in the excellent range (CV=4.5%), and the CV for the initial mean angle value of the torso was in the acceptable range (CV=14.2%). However, the return angle of the torso after the flexion test produced a CV value of 16.7 percent, which is above the 15% limit for acceptability. Inasmuch as the torso return angle average of 5.67 degrees is well below the maximum allowable 8 degree limit, the slightly higher repeatability CV value than the maximum allowable is of little concern in this case. Evidence of a specific return angle is indicative of the torso mid-section having certain elastic, more human-like properties. A return within the 8 degree limit indicates that the forces of restitution are intact. No return, or an indefinite return, would indicate a substantial change within the internal mechanisms of the mid-torso structure, such as failure of the lumbar spine, abdomen, or a substantial shift between interfacing body segments within the abdominal cavity. Although the dummies' responses were just outside the acceptable range for repeatability, each response demonstrated elastic properties and no structural failures.

D. Sled tests

To assess the repeatability and reproducibility of the HIII–10C as a complete dummy, the agency conducted two sets of FMVSS No. 213 type sled tests with the dummy placed in a booster seat and with test environment variables minimized. A more repeatable test environment was constructed in the form of a rigid bench seat, as opposed to a cushioned seat, to minimize seat cushion related variables and facilitate consistent dummy positioning

[11] Foster, ibid.

[12] Repeatability is defined as a similarity of responses of a single dummy measured under identical repeated test conditions.

[13] Reproducibility is defined as response similarity between different dummies of the same design under identical test conditions.

throughout the test series. The seat was built to permit vertical adjustment of its base to either allow proper belt restraint placement on the elevated dummy or to accommodate a booster seat to the same sitting height on the lowered base. The seat base was carpeted (¼″ thick, 0.5 lb/square foot weight carpet) to prevent excessive sliding of the booster seat. Again, repeatability and reproducibility of the dummies in systems tests are assessed using the ISO developed CV scale discussed above.

In the first set of sled tests, the two dummies were set-up on the existing rigid bench seat specified in FMVSS No. 213. The features of the bench seat were not modified as specified by a June 24, 2003 final rule amending FMVSS No. 213 (68 FR 37620; Docket No. NHTSA–2003–15351).[14] Because of the possibility of the rigid seat causing the dummies to absorb more of the impact energy, a softer 20 g, 27 mph pulse was applied in the two dummies test series. This pulse represents 19 percent reduced energy from the FMVSS No. 213 sled pulse. A good belt fit on the dummies' shoulders and pelvis was achieved by raising the seat to the equivalent height of a booster seat cushion. None of the dummy responses from this series of tests resulted in CV values that were in the unacceptable range, which demonstrates that the HIII–10C has good repeatability and reproducibility as a complete system.

Test data from the repeatability and reproducibility tests in the reduced energy environment are shown in Table IV, below. Data for repeatability display averages of five responses for each dummy, their respective standard deviations, and the corresponding CV values. The data for reproducibility combine the measurements of both dummies and provide averages, standard deviations, and CV values for each data channel. The responses on the whole are reasonably similar between the two dummies. Table V displays the distribution of the measured CV values of the major body segments from Table IV that fell into each of the repeatability and reproducibility rating categories listed in Table III. The only channel that failed to meet the ''good'' or ''excellent'' categories was the upper neck X force in Dummy #1, which received an ''acceptable'' rating.

TABLE IV.—RESPONSE ANALYSIS OF THE HIII–10C IN SIMULATED BOOSTER HEIGHT

Channel	Repeatability				Reproducibility	
	Dummy #1 (n=5)		Dummy #2 (n=5)		Both test dummies (n=10)	
	AVG	CV (percent)	AVG	CV (percent)	AVG	CV (percent)
Head X (g)	39	5.0	37	2.6	38	4.2
Head Z (g)	47	7.1	40	4.0	44	10.3
Head Resultant (g)	51	7.7	43	3.9	47	10.1
HIC 36	355	7.1	317	5.2	336	8.5
Upper Neck X Force (N)	820	9.6	695	2.2	758	11.2
Upper Neck Z Force (N)	1728	5.0	1525	4.5	1627	8.0
Upper Neck Y Moment (N-m)	34	4.1	38	3.1	36	7.1
Chest X (g)	40	4.7	39	2.4	40	4.1
Chest Z (g)	9	6.0	10	8.0	10	6.9
Chest Resultant (g)	41	4.4	39	1.6	40	3.7
Chest Clip (g)	40	3.2	38	2.2	39	3.5
Chest Deflection (mm)	31	5.4	26	5.4	28	10.6
Pelvis Resultant (g)	39	5.0	39	1.8	39	4.0

TABLE V.—DISTRIBUTION OF THE MEASURED CV VALUES OF THE MAJOR BODY SEGMENTS BY THE REPEATABILITY AND REPRODUCIBILITY RATING SCALES BY FREQUENCY COUNT

[Ref. Table IV, *supra*]

Rating	Repeatability		Reproducibility both dummies
	Test dummy #1	Test dummy #2	
Excellent	7	11	5
Good	5	2	7
Acceptable	1	0	1
Unacceptable	0	0	0
% Acceptable	100	100	100

The second set of sled tests to evaluate repeatability and reproducibility was conducted with three HIII–10C dummies. The third dummy was constructed with the upper half manufactured by Denton ATD and the lower half manufactured by FTSS (combination dummy). Testing of the combination dummy was to determine if the drawing specifications would produce interchangeable parts irrespective of the manufacturer, and if a combination test dummy would provide the same repeatability, reproducibility, and durability as a test dummy manufactured by a single company. The three dummies were seated side by side at booster seat height

[14] The June 24, 2003 final rule increased the test bench's seat cushion angle from 8 degrees off horizontal to 15 degrees; increased the test bench's seat back angle from 15 degrees off vertical to 22 degrees; increased the spacing between the anchors of the lap belt from 222 mm to 400 mm in the center seating position and from 356 mm to 472 mm in the outboard seating positions; and specified a rigid seat back as opposed to a flexible back.

on the updated FMVSS No. 213 bench seat specified in the June 2003 final rule. (The bench seat was slightly modified to provide a lap/shoulder belt for the center seating position.) Testing all three dummies side-by-side permitted a comparison of the test dummies' kinematics in the same crash environment. As in the first set of tests, the seat foam was removed and replaced by carpeting material to minimize possible bench seat interaction effects on the dummies' responses. The three dummies were set up in identical upright postures and restrained by three-point belts representative of vehicle lap and shoulder belts. The full FMVSS No. 213 sled pulse (24 g and 30 mph) was used in these tests. Four repeat tests with the three dummies yielded a total of 12 sets of data. Results are shown in Table VI and summarized in Table VII by how well the dummies fit within the repeatability and reproducibility rating categories.

TABLE VI.—SUMMARY OF SELECTED THREE HIII–10C DUMMIES REPEATABILITY AND REPRODUCIBILITY TEST RESPONSES

[Full FMVSS No. 213 Sled Pulse]

Channel	Dummy # 1 (n=4)		Dummy #2 (n=4)		Combination test dummy (n=4)		All test dummies (n=12)	
	AVG	CV (percent)	AVG	CV (percent)	AVG	CV (percent)	AVG	CV (percent)
Head X (g)	34	10.7	37	9.2	29	.....	33	13.9
Head Z (g)	55	3.6	48	2.0	49	2.0	51	6.8
Head Resultant (g)	60	3.0	51	1.2	53	1.9	55	7.4
HIC 36	545	4.6	464	3.3	483	5.8	498	8.4
Upper Neck X Force (N)	841	6.5	885	8.3	720	5.6	815	11.0
Upper Neck Z Force (N)	1923	4.0	1713	3.8	1757	1.9	1797	6.1
Upper Neck Y Moment (N-m)	41	7.0	38	5.3	39	3.3	39	6.4
Chest X (g)	37	5.1	37	4.5	38	2.9	37	4.0
Chest Z (g)	16	3.0	14	8.0	16	10.2	15	9.5
Chest Resultant (g) 3	38	5.1	39	3.9	40	3.6	39	4.8
Chest Clip (g)	32	7.0	31	6.9	33	6.3	32	6.6
Chest Deflection (mm)	37	4.1	38	3.8	39	4.4	38	4.6
Pelvis Resultant (g)	41	4.3	48	3.4	47	4.2	45	7.5

TABLE VII.—DISTRIBUTION OF THE MEASURED CV VALUES OF THE MAJOR BODY SEGMENTS BY THE REPEATABILITY AND REPRODUCIBILITY RATING SCALE BY FREQUENCY COUNT

[Ref. Table VI, *supra*]

Rating	Repeatability			Reproducibility
	Test dummy #1	Test dummy #2	Combination test dummy	Dummies
Excellent	7	8	8	3
Good	5	3	3	9
Acceptable	0	2	2	1
Unacceptable	1	0	0	0
% Acceptable	93	100	100	100

Test dummy #2 and the combination of test dummy responses demonstrated 100 percent acceptability for repeatability and reproducibility. Test dummy #1 demonstrated approximately 93 percent acceptability for repeatability and 100 percent acceptability for reproducibility. We believe the 93 percent value can be accepted as repeatable. Test dummy #1 was prevented from achieving 100 percent acceptability by a head ''X'' acceleration CV rating of 10.7 percent, which is only 0.7 percent above the acceptability limit. The dummy still demonstrated an acceptable repeatability CV value for the HIC $_{36}$ measurement.

Based on the above, the agency tentatively concludes that the HIII–10C provides sufficient repeatability and reproducibility at both the component level and the system level.

V. The Dummy's Response Sensitivity and Structural Durability

A variety of sled tests were conducted to substantiate the functionality of the HIII–10C dummy's sensitivity in differentiating the effects of substantially different but repeatable restraint configurations in several environments. Durability of the dummy's structure was also assessed in each of these test environments. These sled tests evaluated the dummy's sensitivity to the following variables:

- Booster seat design
- Posture
- Three-point belt application
- Applied pulse
- Vehicle seat
- Airbag interaction.

As discussed below, based on these tests, we tentatively conclude that the HIII–10C is capable of differentiating between restraint systems and incremental improvements in restraint configurations. It also displayed sufficient durability in all environments.

A. Sensitivity of Responses to Booster Seat Design

Tests were conducted with both dummies in the FMVSS No. 213 configuration with two different makes of booster seats, the Graco Grand Cargo and the Century Breverra. These booster seats were chosen because they appeared similar in design and appeared to result in similar dummy postures in the pretest set-up.

In sled tests, the dummies in each type of booster seat showed similar torso kinematics, except for some outboard rotation of the legs in the Century mode. Test results indicate that both HIII–10C dummies were capable of similar differentiation between booster seat models through response measurements. In the Graco Grand Cargo booster seat, both dummies exhibited very similar impact responses. In the Century Breverra seat, similarities in impact responses between the dummies were somewhat less strong. It appears that relatively good consistency of the response by both dummies in the Graco Grand Cargo booster seat and somewhat less consistency by the same dummies in the Century Breverra seat were due to differences in the containment characteristics of the two booster seats during the test rather than differences between the dummies themselves.

B. Sensitivity of Response to Dummy's Posture

As explained previously, the HIII–10C dummy is capable of being seated in a ''slouched'' position, similar to adolescent children sitting in adult seats. The slouched position permits the lower portion of the dummy to be brought forward so that the knees can bend and orient the lower legs downwards at the front of a seat. This forward positioning of the legs puts the slouched dummy's upper torso in a reclined orientation approximately 12 degrees from the normal upright torso orientation.[15] In testing, the slouched dummies ''submarined'' under the lap belt, demonstrating that the HIII–10C is suitable for detecting and assessing submarining tendencies within belt restraint-seat systems that are not built to prevent such an event.

C. Sensitivity of Response of the Dummy in Three-Point Belt Applications

This series of tests was to determine if the dummy could differentiate between properly and improperly used shoulder belts when a booster seat is not utilized, and also to evaluate impact responses between dummies in three-point belt systems and booster seats. The tests compared the effects of belt placement on the impact kinematics and response of the HIII–10C dummy. Each dummy was seated on the FMVSS No. 213 type bench seat in two repeated frontal impact tests. To represent incorrect three-point belt application (misuse), adult belt restraints were applied on the upright-seated HIII–10C torso in the normal manner, except that the shoulder belt, instead of being routed over the shoulder, was routed under the seated dummy's arm.

Each dummy placed in the misuse configuration exhibited distinctly different kinematics from when it was properly restrained. The upper torso, while pitching forward, forced the shoulder belt to slide down the torso towards the abdomen to become like a lap belt. At extreme flexion, the upper torso jack-knifed over the belt restraint far enough to allow the head to impact the knees. However, during the upper torso jack-knifing motion, the head movement relative to the upper torso was relatively small.

Comparison of test data indicate that the HIII–10C dummy is suitable for detecting and assessing misuse of the shoulder belt on the child's upper torso. Misalignment of the shoulder belt produces not only a very large chest deflection, but also can damage the chest deflection measuring system. However, since compliance test conditions do not typically include belt misuse evaluations, mechanical failure of the deflection measuring system in this test set-up is of little concern. Nonetheless, the deflection measuring system would be able to detect whether a shoulder slid off the dummy's shoulder.

Dummies restrained in booster seats indicate fairly sizable impact response reductions over dummies restrained in three-point belt systems, except for relatively minor differences in chest deflections. Chest deflections of dummies in booster seats were on the average about 5 percent higher than in three-point belt systems at comparable sled impact speeds.

D. Sensitivity of Dummy Response and Durability in NCAP Pulse and Different Restraint Systems

Subsequent to completion of the FMVSS No. 213 type tests, the FTSS and Denton dummies were evaluated in a vehicle environment at NCAP speed on the HYGE sled. The objectives were: (1) To evaluate the dummy's durability under severe loading conditions; (2) to compare the dummy's responses in booster seat versus non-booster in normal seating configurations, including the slouch posture; and (3) to measure differences in kinematic excursions of the head and knees in the different test configurations. This sled was set up for this test series to represent the vehicle environment of a 2000 Ford Expedition XLT. The sled pulse was based on the NCAP 35 mph vehicle to barrier crash acceleration profile.

For the dummies in booster seats and in normal upright and slouched set-ups, the belt was positioned correctly by adjusting the D-ring position. A D-ring is the anchorage for a shoulder belt and its position can be adjusted to enhance the correctness of shoulder belt fit. For the slouch tests, the D-ring was kept in the same position as for the normal upright posture, resulting in incorrect belt fit on the dummy (shoulder belt medial to the clavicle, and lap belt top surface superior to the pelvis lip). As expected, the dummies seated in booster seats yielded significantly lower response levels than three-point belted dummies in upright and in slouched postures.[16]

While no durability problems were encountered in component certification and FMVSS No. 213 type sled tests, one type of problem emerged during the NCAP test series. Some ribs from both dummies experienced delamination of the damping material. Upon investigation, this was found to be an anomalous initial manufacturing problem, because replacement ribsets used in subsequent dummy tests survived well over 30 relatively severe sled impact exposures and numerous certification tests without indication of any structural or functional failures. Accordingly, NHTSA believes that the ribs raise neither fatigue nor durability issues.

VI. Dummy Performance in OOP Environment

The HIII–10C was evaluated for its usefulness and robustness in the static out-of-position (OOP) airbag compliance test of FMVSS No. 208, *Occupant crash protection.* Under the requirements of FMVSS No. 208, vehicle manufacturers may comply with an OOP air bag requirement which, in part, tests the interaction of an air bag and a child occupant under two ''worst-case'' scenarios. In those, the air bag is deployed with the child's head on the vehicle's instrument panel (head-to-IP), and the air bag is deployed with the child's chest on the instrument panel (chest-to-IP). In testing the HIII–10C

[15] Normal upright orientation means the upper torso midsagittal backline is essentially parallel to the seat back incline plan.

[16] While no durability problems were encountered in component certification and FMVSS No. 213 type sled tests, one type of a problem emerged during the NCAP test series. Some ribs from both dummies experienced delamination of the damping material. Upon investigation, we preliminarily determined that this problem is most likely related to either the manufacturing process or adhesive selection, rather than a flaw in design. This was confirmed in subsequent testing in which new ribsets of the same design mounted in the two dummies survived well over 30 sled tests and numerous certification tests without indication of any structural or functional failures. Accordingly, the agency believes that the ribs pose neither fatigue nor durability issues.

under the OOP conditions, three objectives were of primary interest:

- Evaluate the neck's durability;
- Establish the capacity and performance of the head/neck and thorax instrumentation;
- Determine ease of dummy positioning for OOP testing.

1. Test Set-Up

In the head-to-IP tests, the neck angle was set at 16 degrees flexion relative to the perpendicular to the neck base mounting plateau so that the chin of the dummy was level with the centerline of the airbag flap. For the chest-to-IP position, the neck angle was changed to 0 degrees so that the head was not touching the windshield. The seat back was reclined fully. The doorsill, striker face, and windshield were used as measurement references to position the dummy.

2. General Observations

Video analysis of the dummies' kinematics exhibited minimal torso twisting around the superior-inferior axis during the forward and backward translation while in contact with the airbag. Chalk transfer to the airbag, in addition to video analysis, did not show the airbag entering the cavity between the chin and neck.

3. Neck Durability

The neck structure exhibited no visible damage during the OOP tests. Dummy calibration tests following the OOP test series indicated that both FTSS test dummy neck and Denton ATD test dummy neck continued to pass the calibration response requirement in both flexion and extension. Except for minor abrasions and mini-tears to the chin area of the head skin due to airbag membrane interaction, no other failures were encountered.

4. Response Differences Due to Dummy Makes

With the exception of HIC values, the average response values for each dummy appear to be consistent with each another. The FTSS test dummy experienced HIC values of 91 and 169 for the head-to-IP and chest-to-IP configurations, respectively. The Denton test dummy experienced HIC values of 179 and 589 for the head-to-IP and chest-to-IP configurations, respectively. However, the small number of tests prevents drawing definitive conclusions on differences between the two dummies.

5. Dummy Positioning

The IP positions for the Hybrid III 6-year-old (HIII–6C) found in S24.4 of FMVSS No. 208 were used as reference. One modification to the procedure was required to better position the HIII–10C. In the chest IP position, the lower legs below the femur were removed to allow mid-chest contact with the IP without wedging the head against the windshield.

VI. Proposed Calibration Tests

The agency proposes the following calibration test specifications and procedures for the HIII–10C dummy. Performance certification specifications would test response requirements for components of the dummy (the head; neck; thorax; and knees), and a semi-static flexion test of the upper torso with respect to the lower torso of a fully assembled seated dummy.

A. Head Drop Specification

Since the HIII–10C head is the same as the Hybrid III small female head, we are proposing the same head drop specification for the HIII–10C as that of the 49 CFR Part 572, Subpart O, Hybrid III 5th Percentile Female Test Dummy, Alpha Version. Under Subpart O the head is dropped from a 376 mm height targeting the forehead to impact at the midsagittal plane a flat, rigid surface. When the dummy head is dropped in accordance with the above test, the agency proposes the following certification specifications:

1. The peak resultant acceleration must not be less than 250 g and not more than 300 g;
2. The resultant acceleration vs. time history curve shall be unimodal; oscillations occurring after the main pulse must be less than 10 percent of the peak resultant acceleration; and
3. The lateral acceleration shall not exceed 15 g (zero to peak).

B. Neck Pendulum Test

The proposed test procedure for the neck pendulum test corresponds to the calibration test specified for the Hybrid III series of test dummies. Under the proposed procedure the head-neck assembly would be mounted on the pendulum described in Figure 22 of 49 CFR part 572 so that the leading edge of the lower neck bracket coincides with the leading edge of the pendulum. The pendulum would then be released from a height to achieve an impact velocity of 6.1 ± 0.12 m/s (20.0 ± 0.4 ft/s) for flexion tests and 5.03 ± 0.12 m/s (16.50 ± 0.4. ft/s) for extension tests. The pendulum would then be stopped from the initial velocity with an acceleration vs. time pulse that meets the velocity change as specified below. When the HIII–10C neck is tested in accordance with the proposed test procedure, the following specifications would have to be met:

1. Flexion

(a) The plane D (*i.e.*, an imaginary plane perpendicular to the skull cap/skull interface) shall rotate upon arrest of the pendulum motion in the direction of pre-impact flight with respect to the pendulum's longitudinal centerline between 74 and 88 degrees.

(b) During the time interval while rotation is within the specified corridor, the peak moment about the occipital condyles must not be less than 50 N-m (36.9 ft-lbf) and not more than 62 N-m (45.7 ft-lbf).

(c) The positive moment shall decay for the first time to 10 N-m (7.4 ft-lbf) between 85 ms and 105 ms after time zero.

2. Extension

(a) The plane D (*i.e.*, an imaginary plane perpendicular to the skull cap/skull interface) shall rotate upon arrest of the pendulum motion in the direction of pre-impact flight with respect to the pendulum's longitudinal centerline between 99 and 114 degrees.

(b) During the time interval while rotation is within the specified corridor, the peak moment about the occipital condyles must not be less than −35 N-m (−25.8 ft-lbf) and not more than −47 N-m (−34.7 ft-lbf).

(c) The positive moment shall decay for the first time to −10 N-m (−7.4 ft-lbf) between 100 ms and 120 ms after time zero.

C. Knee impact

This calibration test would be performed on a knee assembly, which consists of the lower upper leg assembly, the knee and the distal portion of the femur including the femur load transducer or its structural replacement. When impacted by the test pendulum at 2.1 m/s, the peak knee response force would be required to be between 2560 N and 3140 N.

D. Thorax impact

The thorax impact calibration test would be performed on a fully assembled, seated dummy. The dummy set-up and impact procedures would be similar to that in 59 CFR Part 572, Subpart O. Under the proposed calibration requirement, when the test probe impacts the test dummy at the chest midsagittal plane below the number three rib, the following specifications must be met:

(1) The chest in pendulum impact at 6.0 m/s develops a resistance force between 1830 N and 2330 N at peak sternum deflection between 40.5 mm and 48.5 mm, and

(2) The force deflection plot is to have an internal hysteresis between the loading and unloading portions of the curve between 69 percent and 85 percent.

E. Torso flexion

As with the thorax impact calibration test, the torso flexion calibration test would be performed on a fully assembled, seated dummy. The test procedure would determine the combined stiffness of the molded lumbar assembly, abdominal insert, and chest flesh assembly resisting articulation between the upper torso assembly and the lower torso assembly. The resistance to flexion of the upper torso relative the lower torso at 35 deg. of upper torso rotation would be required to be between 190 N and 240 N. Upon removal of the force, the torso would be required to return to within 8 degrees of it initial position.

VII. Benefits and Costs

Direct safety benefits to the public by the issuance of this regulation are not quantifiable. However, the availability of this dummy in a regulated format will have indirect safety benefits since it will provide a more suitable, stabilized, and objective test tool to the safety community for use in research and development of improved after market and/or integrated restraint systems. In addition, incorporation of the test dummy will permit CRS manufacturers to begin offering new CRS systems commercially with certification that they have been proof tested with an appropriately used and certified test dummy.

The cost of an uninstrumented HIII–10C dummy is approximately $32,700. The cost for a minimum set of instruments for compliance type testing, which may include 3 accelerometers each for the head, thorax, and the pelvis, a chest deflection potentiometer, a force and moment transducer for the upper neck and the lumbar spine, and single axis force transducer for each femur would add approximately $46,200. A full set of instrumentation as shown below would add approximately $71,900 to the cost of an uninstrumented dummy.

TABLE VIII.—INSTRUMENTATION AVAILABLE FOR THE HIII–10C DUMMY

Location	Measurement	Number of channels
Head C.G.*	Acceleration	3
Head Tilt Sensor	Acceleration	1 (optional)
Upper Neck Load Cell*	Forces & Moments	6
Lower Neck Load Cell	Forces & Moments	6 (optional)
Thorax C.G.*	Acceleration	3
Shoulder*	Force	2
Sternum*	Displacement	1
Sternum	Displacement (IR–TRACC)	2 (optional)
Sternum	Acceleration	2 (optional)
Spine	Acceleration	2 (optional)
Lumbar Spine*	Forces and Moments	3
Pelvis C.G.*	Acceleration	3
A–P Iliac Spine*	Forces	4
Femur*	Force	1 each rt&lt (optional)
Femur	Forces and Moments	6 each rt&lt (optional)
Mid-shaft Tibia	Force	1 each rt&lt (optional)
Mid-shaft Tibia	Forces and Moments	6 each rt&lt (optional)

*Instruments intended to be used in NHTSA FMVSS No. 213 type testing.

IX. Public Participation

How Do I Prepare and Submit Comments?

Your comments must be written and in English. To ensure that your comments are correctly filed in the Docket, please include the docket number of this document in your comments.

Your comments must not be more than 15 pages long. (49 CFR 553.21). NHTSA established this limit to encourage you to write your primary comments in a concise fashion. However, you may attach necessary additional documents to your comments. There is no limit on the length of the attachments.

Please submit two copies of your comments, including the attachments, to Docket Management at the address given above under **ADDRESSES**.

You may also submit your comments to the docket electronically by logging onto the Dockets Management System Web site at *http://dms.dot.gov.* Click on ''Help & Information'' or ''Help/Info'' to obtain instructions for filing the document electronically.

How Can I Be Sure That My Comments Were Received?

If you wish Docket Management to notify you upon its receipt of your comments, enclose a self-addressed, stamped postcard in the envelope containing your comments. Upon receiving your comments, Docket Management will return the postcard by mail.

How Do I Submit Confidential Business Information?

If you wish to submit any information under a claim of confidentiality, you should submit three copies of your complete submission, including the information you claim to be confidential business information, to the Chief Counsel, NHTSA, at the address given above under **FOR FURTHER INFORMATION CONTACT**. In addition, you should submit two copies, from which you have deleted the claimed confidential business information, to Docket Management at the address given above under **ADDRESSES**. When you send a comment containing information claimed to be confidential business information, you should include a cover letter setting forth the information specified in our confidential business information regulation. (49 CFR Part 512.)

Will the Agency Consider Late Comments?

NHTSA will consider all comments that Docket Management receives before the close of business on the comment

closing date indicated above under **DATES**. To the extent possible, the agency will also consider comments that Docket Management receives after that date. If Docket Management receives a comment too late for the agency to consider it in developing a final rule (assuming that one is issued), the agency will consider that comment as an informal suggestion for future rulemaking action.

How Can I Read the Comments Submitted By Other People?

You may read the comments received by Docket Management at the address given above under **ADDRESSES**. The hours of the Docket are indicated above in the same location.

You may also see the comments on the Internet. To read the comments on the Internet, take the following steps:

1. Go to the Docket Management System (DMS) Web page of the Department of Transportation (*http://dms.dot.gov/).*

2. On that page, click on ''search.''

3. On the next page (*http://dms.dot.gov/search/),* type in the four-digit docket number shown at the beginning of this document. Example: If the docket number were ''NHTSA–1998–1234,'' you would type ''1234.'' After typing the docket number, click on ''search.''

4. On the next page, which contains docket summary information for the docket you selected, click on the desired comments. You may download the comments. Although the comments are imaged documents, instead of word processing documents, the ''pdf'' versions of the documents are word searchable.

Please note that even after the comment closing date, NHTSA will continue to file relevant information in the Docket as it becomes available. Further, some people may submit late comments. Accordingly, the agency recommends that you periodically check the Docket for new material.

Anyone is able to search the electronic form of all comments received into any of our dockets by the name of the individual submitting the comment (or signing the comment, if submitted on behalf of an association, business, labor union, etc.). You may review DOT's complete Privacy Act Statement in the **Federal Register** published on April 11, 2000 (Volume 65, Number 70; Pages 19477–78) or you may visit *http://dms.dot.gov.*

X. Rulemaking Analyses and Notices

Executive Order 12866 and DOT Regulatory Policies and Procedures

Executive Order 12866, ''Regulatory Planning and Review'' (58 FR 51735, October 4, 1993), provides for making determinations whether a regulatory action is ''significant'' and therefore subject to Office of Management and Budget (OMB) review and to the requirements of the Executive Order. This rulemaking action was not considered a significant regulatory action under Executive Order 12866. This rulemaking action was also determined not to be significant under the Department of Transportation's (DOT's) regulatory policies and procedures (44 FR 11034, February 26, 1979). The cost of an uninstrumented HIII–10C is approximately $32,700. Instrumentation would add approximately $46,200 for minimum requirements and approximately $71,900 for maximum instrumentation to the cost of the dummy.

This document proposes to amend 49 CFR Part 572 by adding design and performance specifications for a test dummy representative of a ten-year-old child that the agency may use in research and in compliance tests of the Federal child restraint system safety standards. If this proposed Part 572 rule becomes final, it would not impose any requirements on anyone. Businesses would be affected only if they choose to manufacture or test with the dummy. Because the economic impacts of this proposal are minimal, no further regulatory evaluation is necessary.

Regulatory Flexibility Act

Pursuant to the Regulatory Flexibility Act (5 U.S.C. 601 *et seq.*, as amended by the Small Business Regulatory Enforcement Fairness Act (SBREFA) of 1996), whenever an agency is required to publish a proposed or final rule, it must prepare and make available for public comment a regulatory flexibility analysis that describes the effect of the rule on small entities (*i.e.*, small businesses, small organizations, and small governmental jurisdictions), unless the head of the agency certifies the rule will not have a significant economic impact on a substantial number of small entities. The Small Business Administration's regulations at 13 CFR Part 121 define a small business, in part, as a business entity ''which operates primarily within the United States.'' (13 CFR 121.105(a)).

We have considered the effects of this rulemaking under the Regulatory Flexibility Act. I hereby certify that the proposed rulemaking action would not have a significant economic impact on a substantial number of small entities. This action would not have a significant economic impact on a substantial number of small entities because the addition of the test dummy to Part 572 would not impose any requirements on anyone. NHTSA would not require anyone to manufacture the dummy or to test motor vehicles or motor vehicle equipment with it.

National Environmental Policy Act

NHTSA has analyzed this proposal for the purposes of the National Environmental Policy Act and determined that it will not have any significant impact on the quality of the human environment.

Executive Order 13045

Executive Order 13045 (62 FR 19885, April 23, 1997) applies to any rule that: (1) is determined to be ''economically significant'' as defined under E.O. 12866, and (2) concerns an environmental, health, or safety risk that NHTSA has reason to believe may have a disproportionate effect on children. If the regulatory action meets both criteria, we must evaluate the environmental health or safety effects of the planned rule on children, and explain why the planned regulation is preferable to other potentially effective and reasonably feasible alternatives considered by us.

This proposed rule is not subject to the Executive Order because it is not economically significant as defined in E.O. 12866.

Executive Order 13132 (Federalism)

Executive Order 13132 requires agencies to develop an accountable process to ensure ''meaningful and timely input by State and local officials in the development of regulatory policies that have federalism implications.'' ''Policies that have federalism implications'' is defined in the Executive Order to include regulations that have ''substantial direct effects on the States, on the relationship between the national government and the States, or on the distribution of power and responsibilities among the various levels of government.''

NHTSA has analyzed this proposed amendment in accordance with the principles and criteria set forth in Executive Order 13132. The agency has determined that this proposal does not have sufficient federalism implications to warrant consultation and the preparation of a Federalism Assessment.

Civil Justice Reform

This proposed rule would not have any retroactive effect. Under 49 U.S.C.

30103, whenever a Federal motor vehicle safety standard is in effect, a State may not adopt or maintain a safety standard applicable to the same aspect of performance which is not identical to the Federal standard, except to the extent that the state requirement imposes a higher level of performance and applies only to vehicles procured for the State's use. 49 U.S.C. 30161 sets forth a procedure for judicial review of final rules establishing, amending, or revoking Federal motor vehicle safety standards. That section does not require submission of a petition for reconsideration or other administrative proceedings before parties may file suit in court.

Paperwork Reduction Act

Under the Paperwork Reduction Act of 1995, a person is not required to respond to a collection of information by a Federal agency unless the collection displays a valid control number from the Office of Management and Budget (OMB). This proposed rule would not have any requirements that are considered to be information collection requirements as defined by the OMB in 5 CFR Part 1320.

National Technology Transfer and Advancement Act

Section 12(d) of the National Technology Transfer and Advancement Act of 1995 (NTTAA), Public Law 104–113, section 12(d) (15 U.S.C. 272) directs NHTSA to use voluntary consensus standards in its regulatory activities unless doing so would be inconsistent with applicable law or otherwise impractical. Voluntary consensus standards are technical standards (*e.g.*, materials specifications, test methods, sampling procedures, and business practices) that are developed or adopted by voluntary consensus standards bodies. The NTTAA directs NHTSA to provide Congress, through OMB, explanations when the agency decides not to use available and applicable voluntary consensus standards. The proposed test dummy and certification requirements have been based on the work of the SAE DFTG. Differences between the DFTG recommendations and this proposal are minor and are based on additional research performed by the agency.

Unfunded Mandates Reform Act

Section 202 of the Unfunded Mandates Reform Act of 1995 (UMRA), Public Law 104–4, requires Federal agencies to prepare a written assessment of the costs, benefits, and other effects of proposed or final rules that include a Federal mandate likely to result in the expenditure by State, local, or tribal governments, in the aggregate, or by the private sector, of more than $100 million annually (adjusted for inflation with base year of 1995). Before promulgating an NHTSA rule for which a written statement is needed, section 205 of the UMRA generally requires the agency to identify and consider a reasonable number of regulatory alternatives and adopt the least costly, most cost-effective, or least burdensome alternative that achieves the objectives of the rule.

This proposed rule would not impose any unfunded mandates under the UMRA. This proposed rule would not meet the definition of a Federal mandate because it would not impose requirements on anyone. It would amend 49 CFR Part 572 by adding design and performance specifications for a 10-year-old test dummy that the agency may use in the Federal motor vehicle safety standards. If this proposed rule becomes final, it would affect only those businesses that choose to manufacture or test with the dummy. It would not result in costs of $100 million or more to either State, local, or tribal governments, in the aggregate, or to the private sector.

Plain Language

Executive Order 12866 requires each agency to write all rules in plain language. Application of the principles of plain language includes consideration of the following questions:

—Has the agency organized the material to suit the public's needs?
—Are the requirements in the rule clearly stated?
—Does the rule contain technical language or jargon that is not clear?
—Would a different format (grouping and order of sections, use of headings, paragraphing) make the rule easier to understand?
—Would more (but shorter) sections be better?
—Could the agency improve clarity by adding tables, lists, or diagrams?
—What else could the agency do to make this rulemaking easier to understand?

If you have any responses to these questions, please include them in your comments on this NPRM.

Regulation Identifier Number

The Department of Transportation assigns a regulation identifier number (RIN) to each regulatory action listed in the Unified Agenda of Federal Regulations. The Regulatory Information Service Center publishes the Unified Agenda in April and October of each year. You may use the RIN contained in the heading at the beginning of this document to find this action in the Unified Agenda.

List of Subjects in 49 CFR Part 572

Motor vehicle safety, Incorporation by reference.

In consideration of the foregoing, NHTSA is proposing to amend 49 CFR Part 572 as follows:

PART 572—ANTHROPOMORPHIC TEST DUMMIES

1. The authority citation for Part 572 would continue to read as follows:

Authority: 49 U.S.C. 322, 30111, 30115, 30117 and 30166; delegation of authority at 49 CFR 1.50.

2. 49 CFR part 572 would be amended by adding a new subpart T to read as follows:

Subpart T—Hybrid III 10-Year-Old Child Test Dummy (HIII–10C)

Sec.
572.170 Incorporation by reference.
572.171 General description.
572.172 Head assembly and test procedure.
572.173 Neck assembly and test procedure.
572.174 Thorax assembly and test procedure.
572.175 Upper and lower torso assemblies and torso flexion test procedure.
572.176 Knees and knee impact test procedure.
572.177 Test conditions and instrumentation.
Appendix—Figures to Subpart T of Part 572

§ 572.170 Incorporation by reference.

(a) The following materials are hereby incorporated into this Subpart by reference:

(1) A drawings and inspection package entitled ''Drawings and Specifications for the ''Hybrid III 10-year-old Child Test Dummy (HIII–10C), April 2005, consisting of:

(i) Drawing No. 420–0000, Complete Assembly HIII 10-year-old, incorporated by reference in § 572.171 and § 572.177.

(ii) Drawing No. 420–100, Head Assembly, incorporated by reference in § 572.171, § 572.172, § 572.173, and § 572.177.

(iii) Drawing No. 420–2000, Neck Assembly, incorporated by reference in § 572.171, § 572.173, and § 572.177.

(iv) Drawing No. 420–3000, Upper Torso Assembly, incorporated by reference in § 572.171, § 572.174, § 572.175, and § 572.177.

(v) Drawing No. 420–4000, Lower Torso Assembly, incorporated by reference in § 572.171, § 572.175, and § 572.177.

(vi) Drawing No. 420–5000–1, Complete Leg Assembly—left, incorporated by reference in § 572.171, § 572.176, and § 572.177.

(vii) Drawing No. 420–5000–2, Complete Leg Assembly—right, incorporated by reference in § 572.171, § 572.176, and § 572.177.

(viii) Drawing No. 420–7000–1, Complete Arm Assembly—left, and

(ix) Drawing No. 420–7000–2, Complete Arm Assembly—right.

(2) A procedures manual entitled ''Procedures for Assembly, Disassembly and Inspection (PADI) of the Hybrid III 10-year-old Child Test Dummy (HIII–10C), April 2005'';

(3) SAE Recommended Practice J211, Rev. Mar 95 ''Instrumentation for Impact Tests ''Part 1—Electronic Instrumentation'';

(4) SAE J1733 of 1994–12 ''Sign Convention for Vehicle Crash Testing''.

(b) The Director of the Federal Register approved the materials incorporated by reference in accordance with 5 U.S.C. 552(a) and 1 CFR part 51. Copies of the materials may be inspected at NHTSA's Technical Reference Library, 400 Seventh Street S.W., room 5109, Washington, DC, or at the Office of the Federal Register, 800 North Capitol Street, NW., Suite 700, Washington, DC.

(c) The incorporated materials are available as follows:

(1) The Drawings and Specifications for the Hybrid III 10-year-old Child Test Dummy (HIII–10C), April 2005, referred to in paragraph (a)(1) of this section and the Procedures for Assembly, Disassembly and Inspection (PADI) of the Hybrid III 10-year-old Child Test Dummy (HIII–10C), April 2005, referred to in paragraph (a)(2) of this section, are available through the DOT Docket Management System Docket No. 7659, dms.dot.gov. They are also available from Leet-Melbrook, Division of New RT, 1881 Woodfield Rd., Gaithersburg, Md. 20879, (301) 670–0090.

(2) The SAE materials referred to in paragraphs (a)(3) and (a)(4) of this section are available from the Society of Automotive Engineers, Inc., 400 Commonwealth Drive, Warrendale, Pa. 15096.

§ 572.171 General description.

(a) Hybrid III 10-year-old Child Crash Test Dummy (HIII–10C) is defined by drawings and specifications containing the following materials:

(1) Technical drawings and specifications package P/N 420–0000, the titles of which are listed in Table A;

(2) Procedures for Assembly, Disassembly and Inspection (PADI) of the Hybrid III 10-year-old Child Test Dummy (HIII–10C), (April 2005).

TABLE A

Component assembly	Drawing number
Head Assembly	420–100
Neck Assembly	420–2000
Upper Torso Assembly	420–3000
Lower Torso Assembly	420–4000
Complete Leg Assembly—left	420–5000–1
Complete Leg Assembly—right	420–5000–2
Complete Arm Assembly—left	420–7000–1
Complete Arm Assembly—right	420–7000–2

(b) Adjacent segments are joined in a manner such that, except for contacts existing under static conditions, there is no contact between metallic elements throughout the range of motion or under simulated crash impact conditions.

(c) The structural properties of the dummy are such that the dummy conforms to this Subpart in every respect before use in any test similar to those specified in Standard 213, Child Restraint Systems, and Standard 208, Occupant Crash Protection.

§ 572.172 Head assembly and test procedure.

(a) The head assembly for this test consists of the complete head (drawing 420–100), a six-axis neck transducer (drawing SA572–S11) or its structural replacement (drawing 78051–383X), and 3 accelerometers (drawing SA572–S4).

(b) When the head assembly is dropped from a height of 376.0 ± 1.0 mm (14.8 ± 0.04 in) in accordance with paragraph (c) of this section, the peak resultant acceleration at the location of the accelerometers at the head CG may not be less than 250 G or more than 300 G. The resultant acceleration vs. time history curve shall be unimodal; oscillations occurring after the main pulse must be less than 10 percent of the peak resultant acceleration. The lateral acceleration shall not exceed 15 G (zero to peak).

(c) Head test procedure. The test procedure for the head is as follows:

(1) Soak the head assembly in a controlled environment at any temperature between 18.9 and 25.6 °C (66 and 78 °F) and a relative humidity from 10 to 70 percent for at least four hours prior to a test.

(2) Prior to the test, clean the impact surface of the skin and the impact plate surface with isopropyl alcohol, trichloroethane, or an equivalent. The skin of the head must be clean and dry for testing.

(3) Suspend and orient the head assembly as shown in Figure T1. The lowest point on the forehead must be 376.0 ± 1.0 mm (14.8 ± 0.04 in) from the impact surface. The 1.57 mm (0.062 in) diameter holes located on either side of the dummy's head shall be used to ensure that the head is level with respect to the impact surface.

(4) Drop the head assembly from the specified height by means that ensure a smooth, instant release onto a rigidly supported flat horizontal steel plate which is 50.8 mm (2 in) thick and 610 mm (24 in) square. The impact surface shall be clean, dry and have a micro finish of not less than 203.2×10^{-6} mm (8 micro inches) (RMS) and not more than 2032.0×10^{-6} mm (80 micro inches) (RMS).

(5) Allow at least 2 hours between successive tests on the same head.

§ 572.173 Neck assembly and test procedure.

(a) The neck assembly for the purposes of this test consists of the assembly of components shown in drawing 420–2000.

(b) When the head-neck assembly consisting of the head (drawing 420–100), neck (drawing 420–2000), six-channel neck transducer (SA572–S11), lower neck bracket assembly (420–2070), and either three uniaxial accelerometers (drawing SA572–S4) or their mass equivalent installed in the head assembly as specified in drawing 420–100, is tested according to the test procedure in paragraph (c) of this section, it shall have the following characteristics:

(1) *Flexion.* (i) Plane D, referenced in Figure T2, shall rotate in the direction of preimpact flight with respect to the pendulum's longitudinal centerline between 74 degrees and 88 degrees. During the time interval while the rotation is within the specified corridor, the peak moment, measured by the neck transducer (drawing SA572–S11), about the occipital condyles may not be less than 50 N-m (36.9 ft-lbf) and not more than 62 N-m (45.7 ft-lbf). The positive moment shall decay for the first time to 10 N-m (7.4 ft-lbf) between 85 ms and 105 ms after time zero.

(ii) The moment shall be calculated by the following formula: Moment (N-m) = $M_y - (0.01778m) \times (F_x)$.

(iii) M_y is the moment about the y-axis, F_x is the shear force measured by the neck transducer (drawing SA572–S11), and 0.01778m is the distance from the shear force to the occipital condyle.

(2) *Extension.* (i) Plane D, referenced in Figure T3, shall rotate in the direction of preimpact flight with respect to the pendulum's longitudinal centerline between 99 degrees and 114 degrees. During the time interval while the rotation is within the specified

corridor, the peak moment, measured by the neck transducer (drawing SA572–S11), about the occipital condyles may not be more than −35 N-m (−25.8 ft-lbf) and not less than −47 N-m (−34.7 ft-lbf). The positive moment shall decay for the first time to −10 N-m (−7.4 ft-lbf) between 100 ms and 120 ms after time zero.

(ii) The moment shall be calculated by the following formula: Moment (N-m) = $M_y - (0.01778m) \times (F_x)$.

(iii) M_y is the moment about the y-axis, F_x is the shear force measured by the neck transducer (drawing SA572–S11), and 0.01778m is the distance from the shear force to the occipital condyle.

(3) Time zero is defined as the time of initial contact between the pendulum striker plate and the honeycomb material. All data channels shall be at the zero level at this time.

(c) *Test Procedure.* The test procedure for the neck assembly is as follows:

(1) Soak the neck assembly in a controlled environment at any temperature between 20.6 and 22.2 °C (69 and 72 °F) and a relative humidity between 10 and 70 percent for at least four hours prior to a test.

(2) Torque the hex nut (drawing 9000130) on the neck cable (drawing 420–2060) to 0.9 ± 0.2 N-m (8 ± 2 in-lbf) before each test on the same neck.

(3) Mount the head-neck assembly, defined in subsection (b) of this section, on the pendulum described in Figure 22 of 49 CFR 572 so that the leading edge of the lower neck bracket coincides with the leading edge of the pendulum as shown in Figure T2 for flexion tests and Figure T3 for extension tests.

(4)(i) Release the pendulum and allow it to fall freely from a height to achieve an impact velocity of 6.1 ± 0.12 m/s (20.0 ± 0.4 ft/s) for flexion tests and 5.03 ± 0.12 m/s (16.50 ± 0.40 ft/s) for extension tests, measured by an accelerometer mounted on the pendulum as shown in Figure T2 at the instant of contact with the honeycomb.

(ii) Stop the pendulum from the initial velocity with an acceleration vs. time pulse that meets the velocity change as specified below. Integrate the pendulum acceleration data channel to obtain the velocity vs. time curve:

TABLE B.—PENDULUM PULSE

Time (ms)	Flexion		Extension	
	m/s	ft/s	m/s	ft/s
10	1.64–2.04	5.38–6.69	1.59–1.89	4.89–6.20
20	3.04–4.04	9.97–13.25	2.88–3.68	9.45–12.07
30	4.45–5.65	14.60–18.53	4.20–5.20	13.78–17.06

§ 572.174 Thorax assembly and test procedure.

(a) The thorax consists of the part of the torso assembly designated as the upper torso (drawing 420–3000).

(b) When the anterior surface of the thorax of a completely assembled dummy (drawing 420–0000) is impacted by a test probe conforming to section 572.177 at 6.00 ± 0.12 m/s (22.0 ± 0.4 ft/s) according to the test procedure in paragraph (c) of this section:

(1) Maximum sternum displacement (compression) relative to the spine, measured with chest deflection transducer (drawing SA572–T4), must be not less than 40.5 mm (1.59 in) and not more than 48.5 mm (1.91 in). Within this specified compression corridor, the peak force, measured by the impact probe as defined in section 572.177 and calculated in accordance with paragraph (b)(3) of this section, shall not be less than 1830 N (411 lbf) and not more than 2330 N (524 lbf). The peak force after 20 mm (0.79 in) of sternum displacement but before reaching the minimum required 40.5 mm (1.59 in) sternum displacement limit shall not exceed 2330 N (524 lbf).

(2) The internal hysteresis of the ribcage in each impact as determined by the plot of force vs. deflection in paragraph (a)(1) of this section shall be not less than 69 percent but not more than 85 percent. The hysteresis shall be calculated by determining the ratio of the area between the loading (from time zero to maximum deflection) and unloading portions (from maximum deflection to zero force) of the force deflection curve to the area under the loading portion of the curve.

(3) The force shall be calculated by the product of the impactor mass and its measured deceleration.

(b) *Test Procedure.* The test procedure for the thorax assembly is as follows:

(1) The dummy is clothed in a form fitting cotton stretch above-the-elbow sleeved shirt and above-the-knees pants. The weight of the shirt and pants shall not exceed 0.14 kg (0.30 lb) each.

(2) Torque the lumbar cable (drawing 420–4130) to 0.9 ± 0.2 N-m (8 ± 2 in-lbf) and set the lumbar adjustment angle to 12 degrees. Set the neck angle to 16 degrees.

(3) Soak the dummy in a controlled environment at any temperature between 20.6 and 22.2 °C (69 and 72 °F) and a relative humidity between 10 and 70 percent for at least four hours prior to a test.

(4) Seat and orient the dummy on a seating surface without back support as shown in Figure T4, with the limbs extended horizontally and forward, parallel to the midsagittal plane, the midsagittal plane vertical within ± 1 degree and the ribs level in the anterior-posterior and lateral directions within ± 0.5 degrees.

(5) Establish the impact point at the chest midsagittal plane so that the impact point of the longitudinal centerline of the probe coincides with the midsagittal plane of the dummy within ± 2.5 mm (0.1 in) and is 12.7 ± 1.1 mm (0.5 ± 0.04 in) below the horizontal-peripheral centerline of the No. 3 rib and is within 0.5 degrees of a horizontal line in the dummy's midsagittal plane.

(6) Impact the thorax with the test probe so that at the moment of contact the probe's longitudinal centerline falls within 2 degrees of a horizontal line in the dummy's midsagittal plane.

(7) Guide the test probe during impact so that there is no significant lateral, vertical, or rotational movement.

(8) No suspension hardware, suspension cables, or any other attachments to the probe, including the velocity vane, shall make contact with the dummy during the test.

§ 572.175 Upper and lower torso assemblies and torso flexion test procedure.

(a) The test objective is to determine the stiffness of the molded lumbar assembly (drawing 420–4100), abdominal insert (drawing 420–4300), and chest flesh assembly (drawing 420–3560) on resistance to articulation between the upper torso assembly (drawing 420–3000) and lower torso assembly (drawing 420–4000).

(b) When the upper torso assembly of a seated dummy is subjected to a force continuously applied at the head to neck pivot pin level through a rigidly attached adaptor bracket as shown in

Figure T5 according to the test procedure set out in paragraph (c) of this section:

(1) The lumbar spine-abdomen-chest flesh assembly shall flex by an amount that permits the upper torso assembly to translate in angular motion relative to the vertical transverse plane 35 ± 0.5 degrees at which time the force applied must be not less than 190 N (42.7 lbf) and not more than 240 N (54.0 lbf).

(2) Upon removal of the force, the torso assembly must return to within 8 degrees of its initial position.

(c) *Test Procedure.* The test procedure for the upper/lower torso assembly is as follows:

(1) Torque the lumbar cable (drawing 420–4130) to 0.9 ± 0.2 N-m (8 ± 2 in-lbf) and set the lumbar adjustment angle to 12 degrees. Set the neck angle to 16 degrees.

(2) Soak the dummy in a controlled environment at any temperature between 20.6 and 22.2 °C (69 and 72 °F) and a relative humidity between 10 and 70 percent for at least four hours prior to a test.

(3) Assemble the complete dummy (with or without the legs below the femurs) and attach to the fixture in a seated posture as shown in Figure T5.

(4) Secure the pelvis to the fixture at the pelvis instrument cavity rear face by threading four ¼ inch cap screws into the available threaded attachment holes. Tighten the mountings so that the test material is rigidly affixed to the test fixture and the pelvic-lumbar joining surface is 18 degrees from horizontal and the legs are parallel with the test fixture.

(5) Attach the loading adaptor bracket to the spine of the dummy as shown in Figure T5.

(6) Inspect and adjust, if necessary, the seating of the abdominal insert within the pelvis cavity and with respect to the chest flesh, assuring that the chest flesh provides uniform fit and overlap with respect to the outside surface of the pelvis flesh.

(7) Flex the dummy's upper torso three times between the vertical and until the torso reference frame, as shown in Figure T5, reaches 30 degrees from the vertical transverse plane. Bring the torso to vertical orientation and wait for 30 minutes before conducting the test. During the 30-minute waiting period, the dummy's upper torso shall be externally supported at or near its vertical orientation to prevent it from drooping.

(8) Remove all external support and wait two minutes. Measure the initial orientation angle of the torso reference plane of the seated, unsupported dummy as shown in Figure T5. The initial orientation angle may not exceed 20 degrees.

(9) Attach the pull cable and the load cell as shown in Figure T5.

(10) Apply a tension force in the midsagittal plane to the pull cable as shown in Figure T5 at any upper torso deflection rate between 0.5 and 1.5 degrees per second, until the angle reference plane is at 35 ± 0.5 degrees of flexion relative to the vertical transverse plane.

(11) Continue to apply a force sufficient to maintain 35 ± 0.5 degrees of flexion for 10 seconds, and record the highest applied force during the 10-second period.

(12) Release all force at the attachment bracket as rapidly as possible, and measure the return angle with respect to the initial angle reference plane as defined in paragraph (c)(7) of this section three minutes after the release.

§ 572.176 Knees and knee impact test procedure.

(a) The knee assembly for the purpose of this test is the part of the leg assembly shown in drawing 420–5000.

(b) When the knee assembly, consisting of lower upper leg assembly (420–5200), femur load transducer (SA572–S10) or its structural replacement (127–4007), lower leg assembly (420–5300), ankle assembly (420–5400), and foot molded assembly (420–5500) is tested according to the test procedure in paragraph (c) of this section:

(1) The peak resistance force as measured with the test probe-mounted accelerometer must not be less than 2560 N (576 lbf) and not more than 3140 N (706 lbf).

(2) The force shall be calculated by the product of the impactor mass and its deceleration.

(c) *Test Procedure.* The test procedure for the knee assembly is as follows:

(1) Soak the knee assembly in a controlled environment at any temperature between 20.6 and 22.2 °C (69 and 72 °F) and a relative humidity between 10 and 70 percent for at least four hours prior to a test.

(2) Mount the test material and secure it to a rigid test fixture as shown in Figure T6. No part of the foot or tibia may contact any exterior surface.

(3) Align the test probe so that throughout its stroke and at contact with the knee it is within 2 degrees of horizontal and collinear with the longitudinal centerline of the femur.

(4) Guide the pendulum so that there is no significant lateral, vertical, or rotational movement at the time of initial contact between the impactor and the knee.

(5) The test probe velocity at the time of contact shall be 2.1 ± 0.03 m/s (6.9 ± 0.1 ft/s).

(6) No suspension hardware, suspension cables, or any other attachments to the probe, including the velocity vane, shall make contact with the dummy during the test.

§ 572.177 Test conditions and instrumentation.

(a) The test probe for thoracic impacts shall be of rigid metallic construction, concentric in shape, and symmetric about its longitudinal axis. It shall have a mass of 6.89 ± 0.012 kg (15.2 ± 0.05 lbs) and a minimum mass moment of inertia of 2040 kg-cm^2 (1.69 lbf-in-sec^2) in yaw and pitch about the CG. One-third (⅓) of the weight of the suspension cables and their attachments to the impact probe must be included in the calculation of mass, and such components may not exceed five percent of the total weight of the test probe. The impacting end of the probe, perpendicular to and concentric with the longitudinal axis, must be at least 25.4 mm (1.0 in) long, and have a flat, continuous, and non-deformable 121 ± 0.25 mm (4.76 ± 0.01 in) diameter face with a maximum edge radius of 12.7 mm (0.5 in). The probe's end opposite to the impact face must have provisions for mounting of an accelerometer with its sensitive axis collinear with the longitudinal axis of the probe. No concentric portions of the impact probe may exceed the diameter of the impact face. The impact probe shall have a free air resonant frequency of not less than 1000 Hz, which may be determined using the procedure listed in Docket No. NHTSA–7659–6.

(b) The test probe for knee impacts shall be of rigid metallic construction, concentric in shape, and symmetric about its longitudinal axis. It shall have a mass of 1.91 ± 0.01 kg (4.21 ± 0.02 lbs) and a minimum mass moment of inertia of 140 kg-cm^2 (0.12 lbf-in-sec^2) in yaw and pitch about the CG. One third (⅓) of the weight of the suspension cables and their attachments to the impact probe may be included in the calculation of mass, and such components may not exceed five percent of the total weight of the test probe. The impacting end of the probe, perpendicular to and concentric with the longitudinal axis, must be at least 12.5 mm (0.5 in) long, and have a flat, continuous, and non-deformable 76.2 ± 0.2 mm (3.00 ± 0.01 in) diameter face with a maximum edge radius of 12.7 mm (0.5 in). The probe's end opposite to the impact face must have provisions for mounting an accelerometer with its sensitive axis collinear with the

longitudinal axis of the probe. No concentric portions of the impact probe may exceed the diameter of the impact face. The impact probe must have a free air resonant frequency of not less than 1000 Hz, which may be determined using the procedure listed in Docket No. NHTSA–7659–6.

(c) Head accelerometers shall have dimensions, response characteristics, and sensitive mass locations specified in drawing SA572–S4 and be mounted in the head as shown in drawing 420–0000, sheet 2 of 6.

(d) The upper neck force/moment transducer shall have the dimensions, response characteristics, and sensitive axis locations specified in drawing SA572-S11 and be mounted in the head-neck assembly as shown in drawing 420–0000, sheet 2 of 6.

(e) The thorax accelerometers shall have the dimensions, response characteristics, and sensitive mass locations specified in drawing SA572–S4 and be mounted in the torso assembly in a triaxial configuration within the spine box instrumentation cavity.

(f) The lumbar spine force-moment transducer shall have the dimensions, response characteristics, and sensitive axis locations specified in drawing SA572–S12 and be mounted in the lower torso assembly as shown in drawing 420–4000.

(g) The iliac spine force transducers shall have the dimensions and response characteristics specified in drawing SA572–S13 L&R and be mounted in the lower torso assembly as shown in drawing 420–4000.

(h) The pelvis accelerometers shall have the dimensions, response characteristics, and sensitive mass locations specified in drawing SA572–S4 and be mounted in the torso assembly in triaxial configuration in the pelvis bone as shown in drawing 420–0000, sheet 2 of 6.

(i) The single axis femur force transducer (SA572–S10) shall have the dimensions, response characteristics, and sensitive axis locations specified in the appropriate drawing and be mounted in the upper leg assembly, replacing the femur load cell simulator (drawing 127–4007) s shown in drawing 420–5100.

(j) The chest deflection transducer shall have the dimensions and response characteristics specified in drawing SA572–S50 and be mounted to the upper torso assembly as shown in drawing 420–3000, sheet 2 of 6.

(k) The following instrumentation is available for installation in the dummy for research purposes but is not to be used for calibration and/or compliance certification:

(1) The thorax accelerometers have the dimensions, response characteristics, and sensitive mass locations specified in drawing SA572–S4 and be mounted in the torso assembly in uniaxial fore-and-aft oriented configuration arranged as corresponding pairs in two locations each on the sternum and at the spine box of the upper torso assembly as shown in drawing 420–0000, sheet 2 of 6.

(2) The optional IR–Tracc chest deflection system transducer has the dimensions and response characteristics specified in drawing SA572–S43 and is mounted to the spine box assembly as shown in drawing 420–8000.

(3) The lower neck force/moment transducer has the dimensions, response characteristics, and sensitive axis locations specified in drawing SA572–S40 and is mounted to the neck assembly by replacing the lower neck mounting bracket 420–2070 as shown in drawing 420–2000.

(4) The tilt sensor has the dimensions and response characteristics specified in drawing SA572–S42 and is mounted to the head and pelvis accelerometer assemblies as shown in drawing 420–0000, sheet 2 of 6.

(5) The clavicle force/moment transducer shall have the dimensions, response characteristics, and sensitive axis locations specified in drawing SA572–S41 and is mounted in the shoulder assembly as shown in drawing 420–3800.

(l) The outputs of acceleration and force-sensing devices installed in the dummy and in the test apparatus specified by this part shall be recorded in individual data channels that conform to SAE Recommended Practice J211, Rev. Mar95, ''Instrumentation for Impact Tests,'' except as noted, with channel classes as follows:

(1) Head acceleration—Class 1000

(2) Neck:

(i) Forces—Class 1000

(ii) Moments—Class 600

(iii) Pendulum acceleration—Class 180

(3) Thorax:

(i) Rib acceleration—Class 1000

(ii) Spine and pendulum accelerations—Class 180

(iii) Sternum deflection—Class 180

(iv) Forces—Class 1000

(v) Moments—Class 600

(vi) Shoulder forces—Class 180

(4) Lumbar:

(i) Forces—Class 1000

(ii) Moments—Class 600

(iii) Torso flexion pulling force—Class 60 if data channel is used

(5) Pelvis:

(i) Accelerations—Class 1000

(ii) Iliac forces—Class 180

(6) Femur forces—Class 600

(m) Coordinate signs for instrumentation polarity shall conform to the Sign Convention For Vehicle Crash Testing, Surface Vehicle Information Report, SAE J1733, 1994–12.

(n) The mountings for sensing devices shall have no resonant frequency less than 3 times the frequency range of the applicable channel class.

(o) Limb joints must be set at one G, barely restraining the weight of the limb when it is extended horizontally. The force needed to move a limb segment shall not exceed 2G throughout the range of limb motion.

(p) Performance tests of the same component, segment, assembly, or fully assembled dummy shall be separated in time by not less than 30 minutes unless otherwise noted.

(q) Surfaces of dummy components may not be painted except as specified in this subpart or in drawings subtended by this subpart.

BILLING CODE 4910–59–P

Appendix—Figures to Subpart T of Part 572

FIGURE T1

HEAD DROP TEST SET-UP SPECIFICATIONS

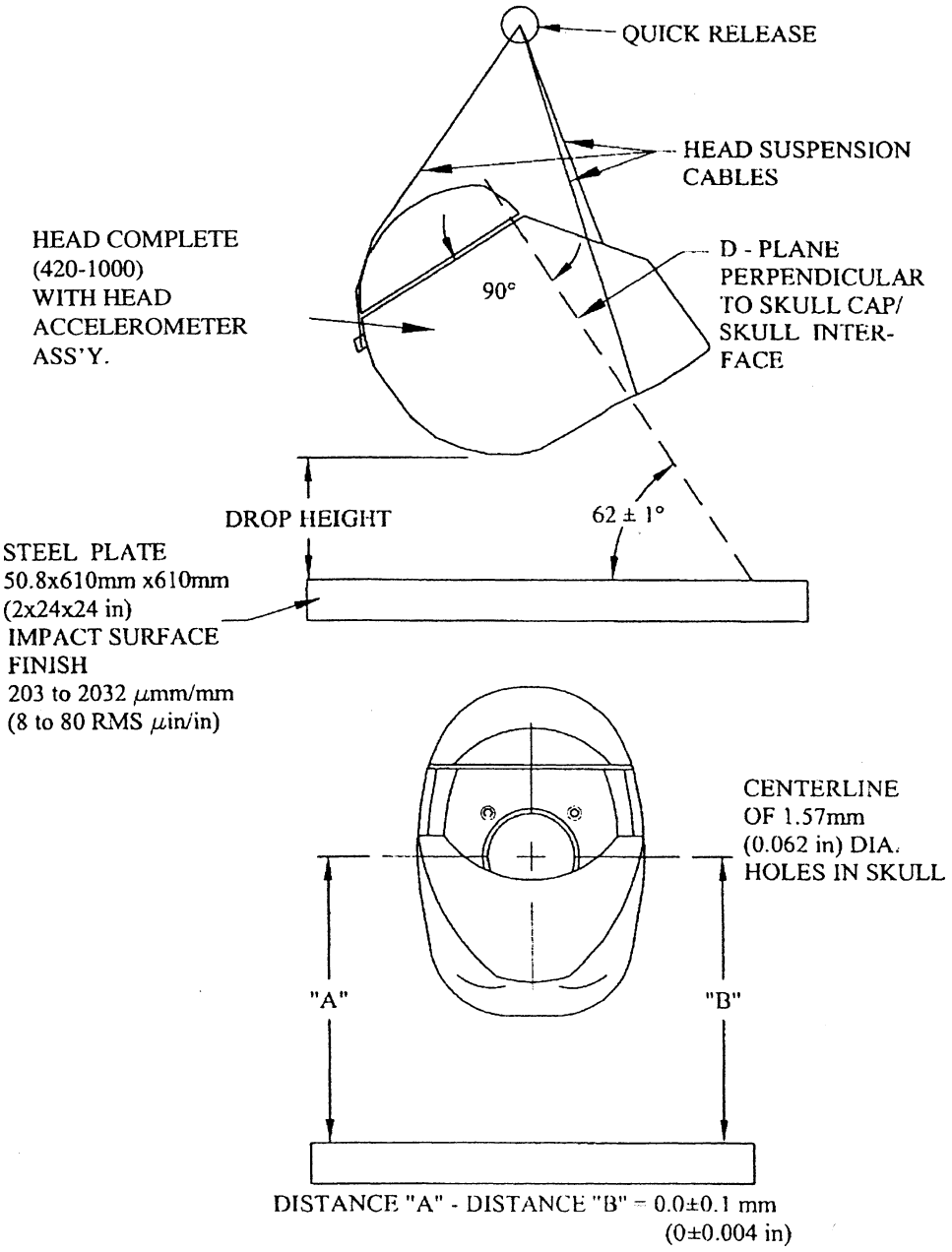

FIGURE T2
NECK FLEXION TEST SETUP SPECIFICATIONS

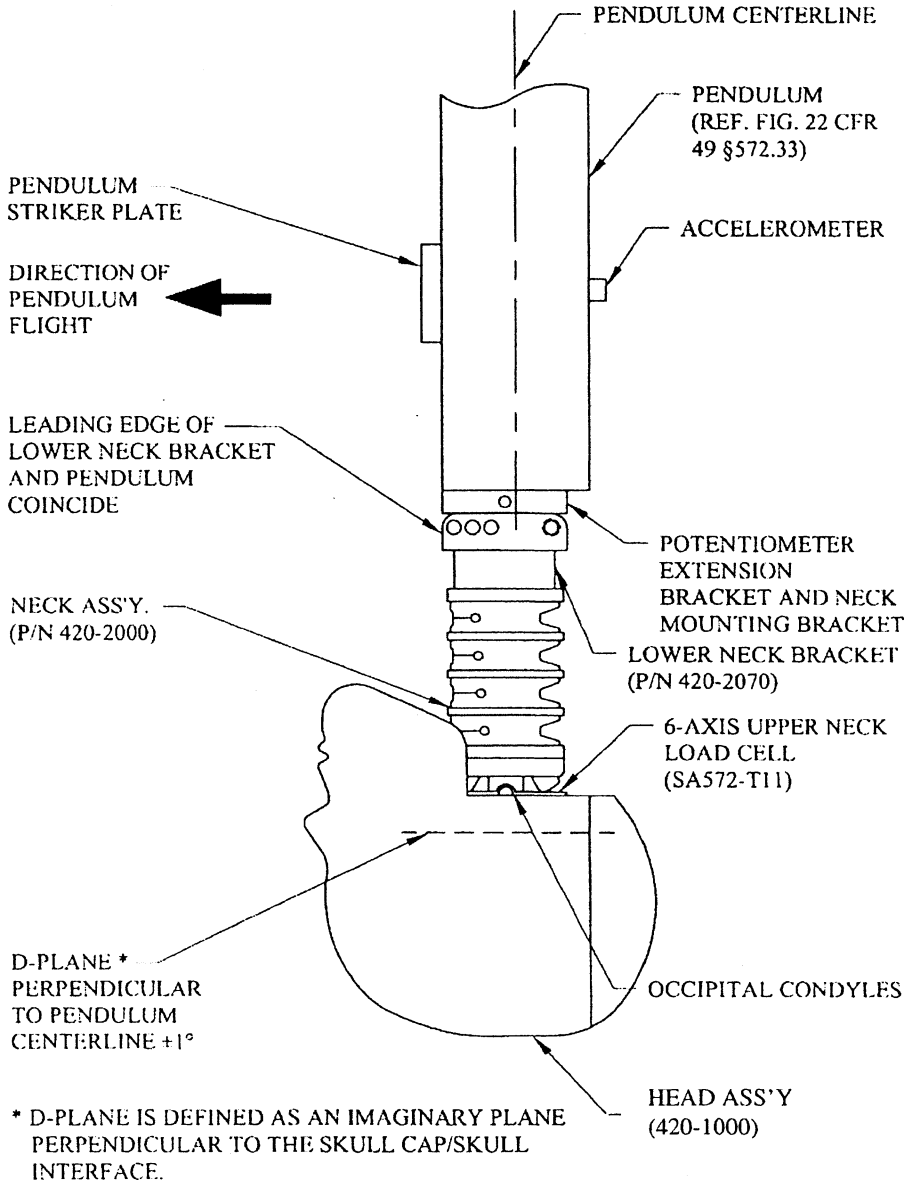

FIGURE T3
NECK EXTENSION TEST SETUP SPECIFICATIONS

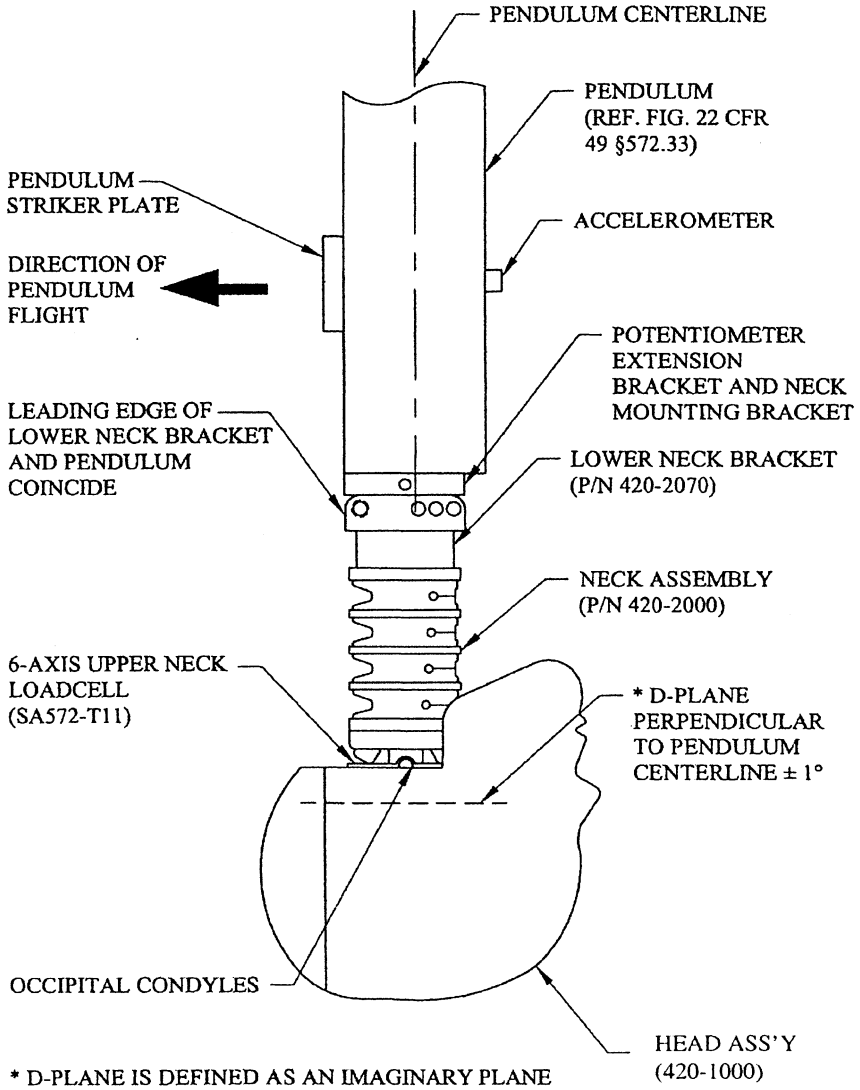

* D-PLANE IS DEFINED AS AN IMAGINARY PLANE PERPENDICULAR TO THE SKULL CAP/SKULL INTERFACE.

FIGURE T4
THORAX IMPACT TEST SETUP SPECIFICATIONS

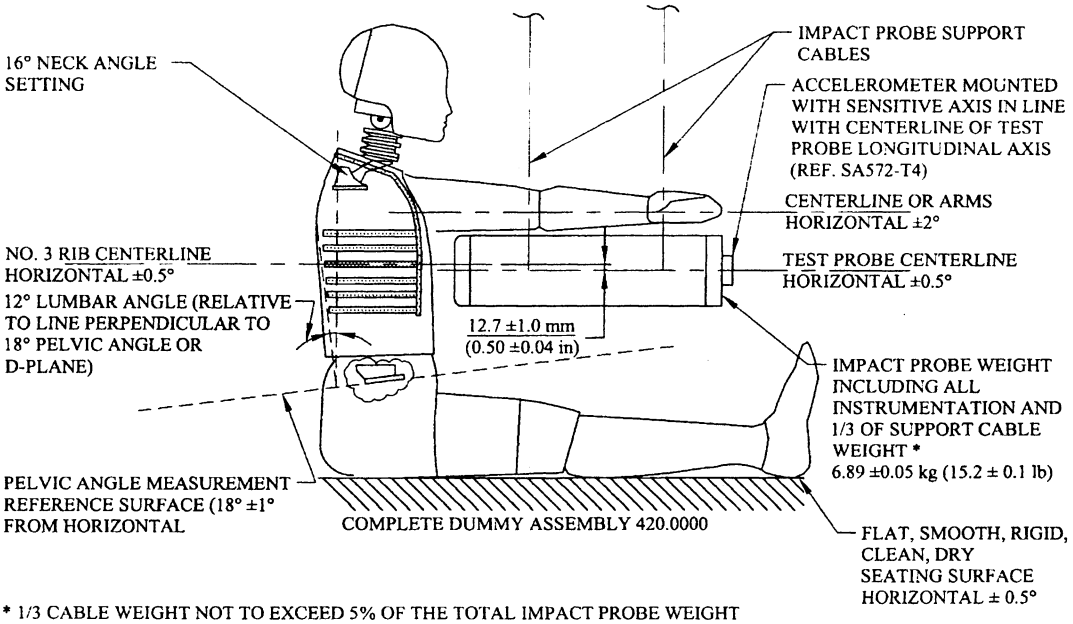

* 1/3 CABLE WEIGHT NOT TO EXCEED 5% OF THE TOTAL IMPACT PROBE WEIGHT

FIGURE T5
TORSO FLEXION TEST SET UP SPECIFICATIONS

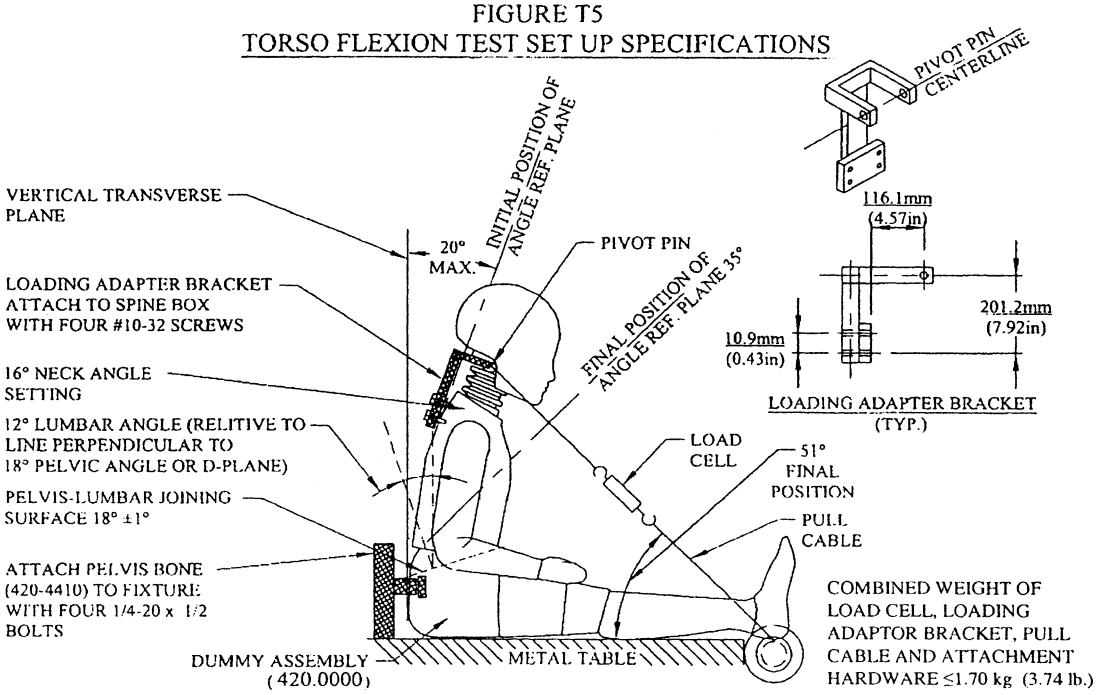

FIGURE T6
KNEE IMPACT TEST SETUP SPECIFICATIONS

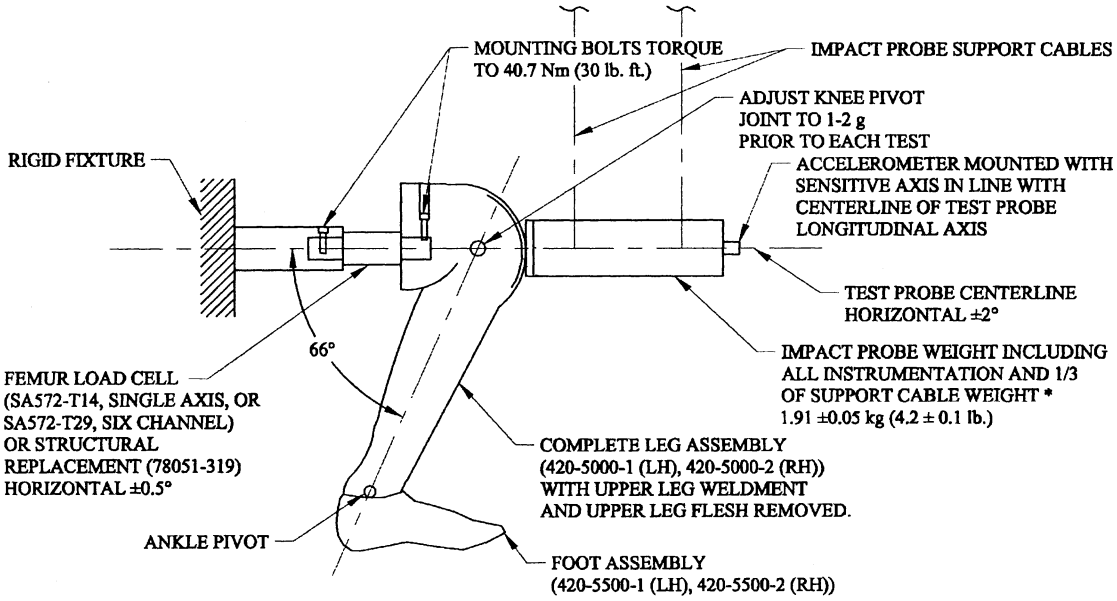

Issued: June 28, 2005.

Stephen R. Kratzke,

Associate Administrator for Rulemaking.

[FR Doc. 05–13659 Filed 7–12–05; 8:45 am]

BILLING CODE 4910–59–C

DEPARTMENT OF COMMERCE

National Oceanic and Atmospheric Administration

50 CFR Part 229

[Docket No. 050127019–5178–02; I.D. 120304D]

RIN 0648–AS01

Taking of Marine Mammals Incidental to Commercial Fishing Operations; Atlantic Large Whale Take Reduction Plan Regulations

AGENCY: National Marine Fisheries Service (NMFS), National Oceanic and Atmospheric Administration (NOAA), Commerce.

ACTION: Proposed rule; extension of public comment period.

SUMMARY: On June 21, 2005, a proposed rule to amend the regulations implementing the Atlantic Large Whale Take Reduction Plan (ALWTRP) was published in the **Federal Register**. NMFS is extending the comment period on this proposed rule by 30 days to August 22, 2005, to allow the public a full 60 days to submit comments.

DATES: Comments on the proposed rule must be received by 5 p.m. EST on August 22, 2005.

ADDRESSES: Comments may be submitted on this proposed rule, identified by RIN 0648–AS01, by any one of the following methods:

(1) NMFS/Northeast Region website: *http://www.nero.noaa.gov/nero/regs/com.html*. Follow the instructions on the website for submitting comments.

(2) Federal eRulemaking Portal: *http://www.regulations.gov*. Follow the instruction on the website for submitting comments.

(3) E-mail: *whalerule.comments@noaa.gov*. Please include the RIN 0648–AS01 in the subject line of the message.

(4) Mail: Mary Colligan, Assistant Regional Administrator for Protected Resources, NMFS, Northeast Region, 1 Blackburn Dr., Gloucester, MA 01930, ATTN: ALWTRP Proposed Rule.

(5) Facsimile (fax) to: 978–281–9394, ATTN: ALWTRP Proposed Rule.

Copies of the Draft Environmental Impact Statement/Regulatory Impact Review for this action can be obtained from the ALWTRP website listed under the Electronic Access portion of this document. Atlantic Large Whale Take Reduction Team (ALWTRT) meeting summaries, and progress reports on implementation of the ALWTRP may be obtained by writing Diane Borggaard, NMFS, Northeast Region, 1 Blackburn Dr., Gloucester, MA 01930 or Juan Levesque, NMFS, Southeast Region, 9721 Executive Center Dr., St.Petersburg, FL 33702–2432. For additional **ADDRESSES** and web sites for document availability see **SUPPLEMENTARY INFORMATION**.

FOR FURTHER INFORMATION CONTACT: Diane Borggaard, NMFS, Northeast Region, 978–281–9300 Ext. 6503, *diane.borggaard@noaa.gov*; Kristy Long, NMFS, Office of Protected Resources, 301–713–2322, *kristy.long@noaa.gov*; or Barb Zoodsma, NMFS, Southeast Region, 904–321–2806, *barb.zoodsma@noaa.gov*.

SUPPLEMENTARY INFORMATION:

Electronic Access

Several of the background documents for the ALWTRP and the take reduction planning process can be downloaded from the ALWTRP web site at *http://www.nero.noaa.gov/whaletrp/*. Copies of the most recent marine mammal stock assessment reports may be obtained by writing to Richard Merrick, NMFS, 166 Water St., Woods Hole, MA 02543 or can be downloaded from the Internet at *http://www.nefsc.noaa.gov/psb/assesspdfs.htm*. In addition, copies of the documents entitled ''Defining Triggers for Temporary Area Closures to Protect Right Whales from Entanglements: Issues and Options'' and ''Identification of Seasonal Area Management Zones for North Atlantic Right Whale Conservation'' are available by writing to Diane Borggaard, NMFS, Northeast Region, 1 Blackburn Dr., Gloucester, MA 01930 or can be downloaded from the ALWTRP website at *http://www.nero.noaa.gov/whaletrp/*. The complete text of the regulations