Federal Register

8–15–05 Monday
Vol. 70 No. 156 Aug. 15, 2005

Pages 47711–48056

The **FEDERAL REGISTER** (ISSN 0097–6326) is published daily, Monday through Friday, except official holidays, by the Office of the Federal Register, National Archives and Records Administration, Washington, DC 20408, under the Federal Register Act (44 U.S.C. Ch. 15) and the regulations of the Administrative Committee of the Federal Register (1 CFR Ch. I). The Superintendent of Documents, U.S. Government Printing Office, Washington, DC 20402 is the exclusive distributor of the official edition. Periodicals postage is paid at Washington, DC.

The **FEDERAL REGISTER** provides a uniform system for making available to the public regulations and legal notices issued by Federal agencies. These include Presidential proclamations and Executive Orders, Federal agency documents having general applicability and legal effect, documents required to be published by act of Congress, and other Federal agency documents of public interest.

Documents are on file for public inspection in the Office of the Federal Register the day before they are published, unless the issuing agency requests earlier filing. For a list of documents currently on file for public inspection, see *www.archives.gov.*

The seal of the National Archives and Records Administration authenticates the Federal Register as the official serial publication established under the Federal Register Act. Under 44 U.S.C. 1507, the contents of the **Federal Register** shall be judicially noticed.

The **Federal Register** is published in paper and on 24x microfiche. It is also available online at no charge as one of the databases on GPO Access, a service of the U.S. Government Printing Office.

The online edition of the **Federal Register** *www.gpoaccess.gov/nara,* available through GPO Access, is issued under the authority of the Administrative Committee of the Federal Register as the official legal equivalent of the paper and microfiche editions (44 U.S.C. 4101 and 1 CFR 5.10). It is updated by 6 a.m. each day the **Federal Register** is published and includes both text and graphics from Volume 59, Number 1 (January 2, 1994) forward.

For more information about GPO Access, contact the GPO Access User Support Team, call toll free 1-888-293-6498; DC area 202-512-1530; fax at 202-512-1262; or via e-mail at *gpoaccess@gpo.gov.* The Support Team is available between 7:00 a.m. and 9:00 p.m. Eastern Time, Monday–Friday, except official holidays.

The annual subscription price for the **Federal Register** paper edition is $749 plus postage, or $808, plus postage, for a combined **Federal Register, Federal Register** Index and List of CFR Sections Affected (LSA) subscription; the microfiche edition of the **Federal Register** including the **Federal Register** Index and LSA is $165, plus postage. Six month subscriptions are available for one-half the annual rate. The prevailing postal rates will be applied to orders according to the delivery method requested. The price of a single copy of the daily **Federal Register,** including postage, is based on the number of pages: $11 for an issue containing less than 200 pages; $22 for an issue containing 200 to 400 pages; and $33 for an issue containing more than 400 pages. Single issues of the microfiche edition may be purchased for $3 per copy, including postage. Remit check or money order, made payable to the Superintendent of Documents, or charge to your GPO Deposit Account, VISA, MasterCard, American Express, or Discover. Mail to: New Orders, Superintendent of Documents, P.O. Box 371954, Pittsburgh, PA 15250-7954; or call toll free 1-866-512-1800, DC area 202-512-1800; or go to the U.S. Government Online Bookstore site, see *bookstore.gpo.gov.*

There are no restrictions on the republication of material appearing in the **Federal Register.**

How To Cite This Publication: Use the volume number and the page number. Example: 70 FR 12345.

Postmaster: Send address changes to the Superintendent of Documents, Federal Register, U.S. Government Printing Office, Washington DC 20402, along with the entire mailing label from the last issue received.

SUBSCRIPTIONS AND COPIES

PUBLIC

Subscriptions:

Paper or fiche	**202–512–1800**
Assistance with public subscriptions	**202–512–1806**

General online information **202–512–1530; 1–888–293–6498**

Single copies/back copies:

Paper or fiche	**202–512–1800**
Assistance with public single copies	**1–866–512–1800 (Toll-Free)**

FEDERAL AGENCIES

Subscriptions:

Paper or fiche	**202–741–6005**
Assistance with Federal agency subscriptions	**202–741–6005**

FEDERAL REGISTER WORKSHOP

THE FEDERAL REGISTER: WHAT IT IS AND HOW TO USE IT

FOR: Any person who uses the Federal Register and Code of Federal Regulations.

WHO: Sponsored by the Office of the Federal Register.

WHAT: Free public briefings (approximately 3 hours) to present:

1. The regulatory process, with a focus on the Federal Register system and the public's role in the development of regulations.

2. The relationship between the Federal Register and Code of Federal Regulations.

3. The important elements of typical Federal Register documents.

4. An introduction to the finding aids of the FR/CFR system.

WHY: To provide the public with access to information necessary to research Federal agency regulations which directly affect them. There will be no discussion of specific agency regulations.

WHEN: Tuesday, August 16, 2005
9:00 a.m.–Noon

WHERE: Office of the Federal Register
Conference Room, Suite 700
800 North Capitol Street, NW.
Washington, DC 20002

RESERVATIONS: (202) 741–6008

Printed on recycled paper.

Contents

Federal Register

Vol. 70, No. 156

Monday, August 15, 2005

Agriculture Department
See Animal and Plant Health Inspection Service
See Farm Service Agency
See Forest Service

Alcohol and Tobacco Tax and Trade Bureau
PROPOSED RULES
Alcohol; viticultural area designations:
Alta Mesa et al., Sacramento and San Joaquin Counties, CA, 47740–47754
NOTICES
Agency information collection activities; proposals, submissions, and approvals, 47876–47877

Animal and Plant Health Inspection Service
NOTICES
Agency information collection activities; proposals, submissions, and approvals, 47784–47785

Army Department
See Engineers Corps

Arts and Humanities, National Foundation
See National Foundation on the Arts and the Humanities

Centers for Medicare & Medicaid Services
RULES
Medicare:
Inpatient rehabilitation facility prospective payment system (2006 FY); update, 47880–48006
PROPOSED RULES
Medicare and Medicaid:
Long term care facilities; immunization standard; participation condition, 47759–47771

Commerce Department
See International Trade Administration
See National Oceanic and Atmospheric Administration
RULES
Disclosure of Government information; change in designated official, 47725

Copyright Office, Library of Congress
NOTICES
Reports and guidance documents; availability, etc.:
Satellite Home Viewer Extension and Reauthorization Act; first report to Congress; information request; comment extension, 47857

Defense Department
See Engineers Corps

Education Department
NOTICES
Agency information collection activities; proposals, submissions, and approvals, 47815–47816
Grant and cooperative agreement awards:
Elementary and secondary education—Striving readers, 47816–47821
Meetings:
Student Financial Advisory Committee, 47821–47822

Energy Department
See Federal Energy Regulatory Commission
See Western Area Power Administration
NOTICES
Grants and cooperative agreements; availability, etc.:
Superconductivity partnerships with industry projects; correction, 47822

Engineers Corps
NOTICES
Environmental statements; notice of intent:
Itasca County, MN; construction and operation of taconite mine, et al., 47814–47815

Environmental Protection Agency
PROPOSED RULES
Air quality implementation plans; approval and promulgation; various States:
Maryland, 47757–47759
NOTICES
Agency information collection activities; proposals, submissions, and approvals, 47836–47838
Air pollution control:
Citizen suits; proposed settlements—
Interstate Natural Gas Association of America, 47838–47839

Farm Service Agency
PROPOSED RULES
Loan and purchase programs:
Preferred Lender Program lenders; status and interest payment accrued during bankruptcy and redemption rights periods, 47730–47733

Federal Aviation Administration
RULES
Airworthiness directives:
Gulfstream, 47720–47725
Pilatus Aircraft Ltd., 47716–47720

Federal Energy Regulatory Commission
NOTICES
Applications, hearings, determinations, etc.:
Calpine Energy Services, L.P., 47822
Forest Investment Group, LLC, 47823
Wisconsin Public Service Corp., 47823

Federal Motor Carrier Safety Administration
RULES
Motor carrier safety standards:
Parts and accessories necessary for safe operation—General amendments, 48008–48055

Federal Reserve System
NOTICES
Banks and bank holding companies:
Change in bank control, 47839
Formations, acquisitions, and mergers, 47839–47840

Federal Trade Commission
PROPOSED RULES
Premerger notification; reporting and waiting period requirements, 47733–47737

Fish and Wildlife Service
NOTICES
Agency information collection activities; proposals, submissions, and approvals, 47845–47846
Environmental statements; notice of intent:
Pribilof Islands, AK; M/V Citrus oil discharge damage assessment; restoration planning, 47846–47848
Meetings:
Trinity Adaptive Management Working Group, 47848
Natural resource damage assessment plans; availability, etc.:
Carbon, Lehigh, Monroe and Northhampton counties, PA; Palmerton Natural Resource assessment, 47848–47849

Forest Service
NOTICES
Environmental statements; notice of intent:
Ochoco National Forest, OR, 47785–47787
Meetings:
Resource Advisory Committees—
Lincoln County, 47787

Health and Human Services Department
See Centers for Medicare & Medicaid Services
See National Institutes of Health
See Substance Abuse and Mental Health Services Administration

Interior Department
See Fish and Wildlife Service
See Land Management Bureau
See National Park Service

International Trade Administration
PROPOSED RULES
Antidumping and countervailing duties:
Sunset review procedures, 47738–47740
NOTICES
Antidumping:
Corrosion-resistant carbon steel flat products from—
Japan, 47787–47792

Labor Department
See Mine Safety and Health Administration

Land Management Bureau
NOTICES
Coal leases, exploration licenses, etc.:
Oklahoma, 47849–47851
Environmental statements; notice of intent:
South National Petroleum Reserve-Alaska Integrated Activity Plan, 47851
Meetings:
Canyons of the Ancients National Monument Advisory Committee, 47851–47852
Survey plat filings:
Nebraska, 47852

Library of Congress
See Copyright Office, Library of Congress

Maritime Administration
PROPOSED RULES
Determination of Availability of Coastwise-Qualified Launch Barges, 47771–47774
NOTICES
Agency information collection activities; proposals, submissions, and approvals, 47875–47876
Coastwise trade laws; administrative waivers:
CHESAPEAKE BAY, et al., 47876

Mine Safety and Health Administration
NOTICES
Agency information collection activities; proposals, submissions, and approvals, 47856–47857

National Foundation on the Arts and the Humanities
NOTICES
Meetings:
Arts Advisory Panel, 47858

National Institutes of Health
NOTICES
Agency information collection activities; proposals, submissions, and approvals, 47840
Inventions, Government-owned; availability for licensing, 47840–47845

National Oceanic and Atmospheric Administration
RULES
Fishery conservation and management:
Alaska; fisheries of Exclusive Economic Zone—
Bering Sea and Aleutian Islands pollock and chinook salmon, 47728–47729
West Coast States and Western Pacific fisheries—
Salmon and coho; recreational fishery adjustments, 47727–47728
PROPOSED RULES
Fishery conservation and management:
Magnuson-Stevens Act provisions—
National standard guidelines; comment extension, 47777
West Coast States and Western Pacific fisheries—
Domestic purse seine and Pelagic longline fisheries exclusive economic zone control date, 47782–47783
Pelagic fisheries non-longline exclusive economic zone control date, 47781–47782
Sea turtles; mitigation measures, 47777–47781
International fisheries regulations:
Pacific tuna—
Eastern tropical Pacific Ocean; purse seine and longline fisheries restrictions, 47774–47776
NOTICES
Marine mammals:
Incidental taking—
University of Alaska, AK; Arctic Ocean marine seismic survey; marine mammals, 47792–47809
Meetings:
Pacific Fishery Management Council, 47809
Permits:
Marine mammals, 47809–47813
Scientific research, 47813–47814

National Park Service
NOTICES
Environmental statements; availability, etc.:
Cape Fear River, NC and St John's River, FL; Low Country Gullah Culture Special Resource Study, 47852
Castillo de San Marcos National Monument, FL; general management plan, 47852–47853
Great Falls Park, VA, 47853
Environmental statements; record of decision:
Big South Fork National River and Recreation Area, KY and TN, 47854–47855

Merced Wild and Scenic River, Yosemite National Park, CA; comprehensive management plan, 47855
Meetings:
Cedar Creek and Belle Grove National History Park Advisory Commission, 47855
National Park System Advisory Board, 47855–47856

National Science Foundation
NOTICES
Committees; establishment, renewal, termination, etc.:
Cyberinfrastructure Advisory Committee, 47858

Pension Benefit Guaranty Corporation
RULES
Single-employer plans:
Allocation of assets—
Interest assumptions for valuing and paying benefits, 47725–47727
NOTICES
Multi-employer plans:
Interest rates and assumptions, 47858–47859

Personnel Management Office
RULES
E-Government Act of 2002; implementation:
Information Technology Exchange Program, 47711–47716
NOTICES
Agency information collection activities; proposals, submissions, and approvals, 47859

Postal Service
PROPOSED RULES
Domestic Mail Manual:
Periodicals mail prepared in sacks; new standards, 47754–47757

Railroad Retirement Board
NOTICES
Agency information collection activities; proposals, submissions, and approvals, 47859–47860

Securities and Exchange Commission
NOTICES
Public Utility Holding Company Act of 1935 filings, 47860–47873
Self-regulatory organizations; proposed rule changes:
National Stock Exchange, 47873–47874

Small Business Administration
NOTICES
Surety Bond Guarantee Program; participating surety companies; fee increase, 47874

State Department
NOTICES
Culturally significant objects imported for exhibition:
Drawn Together: Two Albums of Renaissance Drawings by Girolamo da Carpi, 47875
Meetings:
International Telecommunication Advisory Committee, 47875

Substance Abuse and Mental Health Services Administration
NOTICES
Meetings:
Substance Abuse Treatment Center National Advisory Council, 47845

Transportation Department
See Federal Aviation Administration
See Federal Motor Carrier Safety Administration
See Maritime Administration

Treasury Department
See Alcohol and Tobacco Tax and Trade Bureau

Western Area Power Administration
NOTICES
Power rates:
Salt Lake City Area Integrated Projects, 47823–47836

Separate Parts In This Issue

Part II
Health and Human Services Department, Centers for Medicare & Medicaid Services, 47880–48006

Part III
Transportation Department, Federal Motor Carrier Safety Administration, 48008–48055

Reader Aids

Consult the Reader Aids section at the end of this issue for phone numbers, online resources, finding aids, reminders, and notice of recently enacted public laws.

To subscribe to the Federal Register Table of Contents LISTSERV electronic mailing list, go to http://listserv.access.gpo.gov and select Online mailing list archives, FEDREGTOC-L, Join or leave the list (or change settings); then follow the instructions.

CFR PARTS AFFECTED IN THIS ISSUE

A cumulative list of the parts affected this month can be found in the Reader Aids section at the end of this issue.

5 CFR
370.....47711

7 CFR
Proposed Rules:
762.....47730

14 CFR
39 (3 documents) 47716, 47720, 47722

15 CFR
4.....47725

16 CFR
Proposed Rules:
803.....47733

19 CFR
Proposed Rules:
351.....47738

27 CFR
Proposed Rules:
9.....47740

29 CFR
4022.....47725
4044.....47725

36 CFR
Proposed Rules:
111.....47754

40 CFR
Proposed Rules:
52.....47757

42 CFR
412.....47880
Proposed Rules:
483.....47759

46 CFR
Proposed Rules:
389.....47771

49 CFR
390.....48008
392.....48008
393.....48008

50 CFR
660.....47727
679.....47728
Proposed Rules:
300.....47774
600.....47777
660 (3 documents) 47777, 47781, 47782

Rules and Regulations

Federal Register
Vol. 70, No. 156
Monday, August 15, 2005

This section of the FEDERAL REGISTER contains regulatory documents having general applicability and legal effect, most of which are keyed to and codified in the Code of Federal Regulations, which is published under 50 titles pursuant to 44 U.S.C. 1510.

The Code of Federal Regulations is sold by the Superintendent of Documents. Prices of new books are listed in the first FEDERAL REGISTER issue of each week.

OFFICE OF PERSONNEL MANAGEMENT

5 CFR PART 370

RIN 3206–AJ91

Information Technology Exchange Program

AGENCY: Office of Personnel Management.

ACTION: Final rule.

SUMMARY: The Office of Personnel Management (OPM) is issuing final regulations to implement provisions contained in the E-Government Act of 2002. This law authorizes the temporary detail of employees in the field of information technology (IT) management from the Federal Government to private sector organizations. It also authorizes Federal agencies to accept private sector employees detailed under this program. This program is envisioned to promote the interchange of Federal and private sector workers to enhance skills and competencies.

DATES: Effective September 14, 2005.

FOR FURTHER INFORMATION CONTACT: Hakeem Basheerud-Deen at (202) 606–1434 or by e-mail at *hakeem.basheerud-deen@opm.gov*. Hakeem Basheerud-Deen may also be contacted by TTY at (202) 418–3134, or by fax at (202) 606–2329.

SUPPLEMENTARY INFORMATION: On January 15, 2004, OPM issued proposed regulations at 69 FR 2308–2310 to implement the Federal Information Technology Exchange Program (hereafter referred to as the Program), as authorized by the E-Government Act of 2002 (Act), Public Law 107–347, and requested comments by March 15, 2004. That part of the Act authorizes a Federal agency to detail an exceptional information technology employee to a private sector organization for purposes of training and development. It also gives Federal agencies the authority to accept comparable information technology employees detailed from the private sector. The Program is codified in a new chapter 37 in title 5, United States Code (U.S.C.), and this regulation adds a corresponding part 370, Information Technology Exchange Program, to title 5 of the Code of Federal Regulations (CFR) in accordance with 5 U.S.C. 3707.

Comments

OPM received comments from 8 Federal agencies, 1 professional organization, 1 labor organization, and 22 individuals. Those comments are addressed below according to the corresponding sections of the regulations.

Purpose

One agency commented the Program would be more beneficial if it required a reciprocal exchange of employees, *i.e.*, a temporary exchange of a Federal employee with a private sector employee. OPM did not adopt this suggestion because requiring reciprocity would reduce agency flexibility in designing its Program. Under the final regulations, Federal agencies may detail their employees to the private sector with or without reciprocity.

One agency suggested the phrase, ''to meet the personal interests of employees'' be deleted from the last sentence of paragraph (b) of section 370.101 because any approved details should meet the needs of the agency as well as the employee. We agree and have modified the regulations to state, ''Approved details must meet the strategic program goals of the agency. The benefits to the Federal agency and the private sector organization are the primary considerations in initiating details; not the desires or personal needs of an individual employee'' in section 370.101(b).

One agency recommended the regulations provide more detail about the specific role of the Chief Information Officers (CIO) Council in administering the Program. We note the Act provides for assistance from the CIO Council, but we believe it is inappropriate to prescribe that role in regulations. Doing so would limit the flexibility of the CIO Council in providing assistance.

One labor organization suggested the regulations require agencies to develop procedures for identifying which IT positions are designated for the Program through analyses or studies to determine the needs in those positions. We are not adopting this suggestion because the Act specifically refers to employees and not positions. The Program is intended to enhance the skills and competencies of an agency's IT employees. The regulations require agencies to establish estimated numbers of candidates needed to address IT workforce needs within the agency in accordance with section 370.109(b), and employee selection procedures in accordance with section 370.109(c).

A labor organization noted the proposed regulations fail to discuss the impact of the Program on Government employees who are not detailed. The regulations do not discuss this because the Program's impact on employees not detailed is beyond the scope of these regulations but falls under the agency's overall responsibility to manage its workforce.

Three agencies, one labor organization, and one individual commented the regulations should address performance measurement, feedback, and performance appraisals for detailees. We do not agree this is necessary because these areas are covered already under 5 CFR part 430, section 430.205(b), *Agency Performance Appraisal Programs*, which states, in part, ''an agency program shall establish criteria and procedures to address employee performance for employees who are on detail * * *.''

Two individuals suggested the Program be used for inter-agency exchanges in addition to private sector exchanges. OPM did not adopt this suggestion because inter-agency exchanges are not addressed in the Act.

Definitions

One agency stated OPM did not define ''private sector organization'' and asked if private sector organizations include academic institutions, non-profit organizations, and organizations covered by the Intergovernmental Personnel Act. OPM agrees that clarification is needed. We have added a definition of ''private sector organization'' as a profit-making business entity registered in the Central Contractor Registration (CCR) Database (*http://www.ccr.gov*). The CCR is an accepted standard that ensures private sector organizations meet established

requirements to conduct business with the Government. Details to non-profit and academic organizations are already covered under the Intergovernmental Personnel Act Program and are therefore not considered private sector organizations for the purposes of this program.

Two agencies, one labor organization, and one individual recommended the requirement in section 370.103 that a detailee be an ''exceptional employee'' is subjective and should be clearly defined. We agree and have added a definition of ''exceptional employee'' to mean ''an employee who is rated at the highest levels of the applicable performance appraisal system or, in the case of an employee under an appraisal system that does not have a summary rating level above 'fully successful' or equivalent, is rated at the highest summary level used by the performance appraisal system and demonstrates sustained quality performance significantly above that expected in the type of position involved, as determined under performance related criteria established by the agency.''

In order to ensure consistency across Government, OPM has clarified the definition of information technology management to mean ''the planning, organizing, staffing, directing, integrating, or controlling of information technology as defined by Office of Management and Budget Circular A–130.

Eligibility

Two agencies and one individual requested employees in grades below GS–11 be allowed to participate. We are not implementing this request because the Act established the GS–11 level (or equivalent) as the minimum eligible grade.

One agency suggested the eligibility criteria include a requirement that an employee work in his or her position for a minimum of 1 year prior to participation in the Program to ensure the employee is well grounded in the organization before being allowed to represent the organization on a detail. We do not agree with this suggestion for Governmentwide implementation because such a requirement would overly restrict the ability of agencies to select employees for detail. However, individual agencies may impose such a requirement in their agency plan.

Two agencies commented section 370.103(a)(3) may imply a detail is a reward or career-enhancing detail and, upon returning to the agency, may result in advancement or promotion. These agencies suggested we add language to indicate an employee's eligibility for the Program is not limited to the expectation of assuming increased responsibilities of IT in the future or that advancement or promotion will be a result of the detail. OPM disagrees the proposed language implies a detail is a reward or necessarily career-enhancing. In addition, we are not adopting this suggestion because the Act specifically states that individuals eligible to be detailed under this part are expected to assume increased responsibilities in IT management.

One agency recommended the final regulations be amended to clarify whether non-career Senior Executive Service (SES) members are eligible to serve on a detail. We agree clarification is needed concerning SES members and have amended the language in section 370.103 to state ''only career members of the SES are eligible to be detailed under this part.'' We have excluded non-career SES employees because the Act stipulates eligible employees must be serving under a career or career-conditional appointment.

An individual questioned the appropriateness of allowing employees who are in specifically designated development programs, such as the Presidential Management Fellows Program, the Federal Career Intern Program, or the Student Career Experience Program, to participate. We share this concern and have excluded employees in specifically designated development programs by limiting the eligibility of excepted service employees in section 370.103(b) to those individuals on permanent appointments. Our rationale is we believe it is appropriate for these individuals to gain the full value of their participation in these developmental programs, which oftentimes is their initial Federal appointment, prior to participation in the IT Exchange Program.

A labor organization commented the regulations do not require private sector employers to send top performers into the Program, thereby creating a disparity relative to Federal employers, who are required to do so. OPM disagrees, noting section 370.103(a)(2) states to be eligible for a detail under this part, an individual must be considered an exceptional employee by the individual's current employer. This applies to both Federal and private sector employers.

One agency suggested the regulations permit participation by private sector candidates from companies not based in the U.S. OPM did not fully adopt this suggestion; however, we clarified this section by adding paragraph (c) to section 370.103 which states, ''To be eligible to participate in the Information Technology Exchange Program, a private sector organization must be registered in the Central Contractor Registration Database located at *http://www.ccr.gov*, or fall within one of the exceptions specified in section 4.1102 of the Federal Acquisition Regulation.'' This Governmentwide requirement pertains to both U.S. and foreign private sector organizations seeking to conduct business with the Government. As previously noted, the CCR is an accepted standard that ensures private sector organizations meet established requirements to conduct business with the Government. In addition, as a necessary measure against potential security risks we have amended section 370.103 to require private sector individuals detailed under this part to meet citizenship requirements for Federal employment. Even though these individuals will be on detail, they will be performing work similar to, and along side, Federal employees (oftentimes in secure IT environments) who are subject to these provisions.

Written Agreements

One individual commented employees detailed under this Program may have difficulty returning to their previous positions and Federal agencies may have difficulty reincorporating these persons back into their respective agencies. OPM believes the regulations, as proposed, adequately address any such concerns. The regulations address these situations in two separate sections: Section 370.105, *Written agreements*, generally requires a Federal employee to return to his or her employing agency upon completion of the detail for a period of time equal to the length of that detail; and section 370.109, *Agency plans*, requires agency plans to include return rights and continuing service requirements for Federal employees returning from details.

One agency and one labor organization recommended the written agreement describe the duties of the detailed employee and/or the developmental objectives of the assignment (*e.g.*, projects, programs, systems). We agree, and have modified section 370.105 to require a description of the duties to be performed, a specification of the duration of the detail and the terms under which extensions to the detail may be granted, and individual development plans describing the core IT and other competencies the detailee is expected to acquire. However, the agency has the authority and flexibility to require additional information in the written

agreements and/or tailor agreements to the detail. In addition, we have added language to section 370.102, *Definitions*, that defines core IT competencies as those competencies identified by the Federal CIO Council. These competencies serve as a baseline for Federal agencies in meeting the Clinger-Cohen Act's requirement to determine the training and development needs of the Federal IT workforce.

One individual suggested the service agreement be pro-rated based on the employee's grade (*i.e.*, employees in higher grades have longer service commitments than employees in lower grades). OPM is not adopting this suggestion because the statutory requirement, as stated in 5 U.S.C. 3702, specifies the service requirements which cannot be changed by regulation.

Terms and Conditions

A labor organization expressed concerns about the protection of employees' rights when detailed to the private sector. This organization also stated there is an accountability gap between the agency and private sector organization if there is no requirement for an agreement between the agency and private sector organization. OPM notes section 370.106 states Federal employees will lose none of their rights while on detail. However, we agree there must be accountability between all parties, and have added language to section 370.105 *Written Agreements* which states, ''The written agreement must be a three-party agreement between the Federal agency (agency head or designee), the individual (private or Federal), and the private sector organization.''

Three agencies, one professional organization, and several individuals recommended OPM clarify how, and by whom, costs associated with this Program will be paid. OPM notes section 370.105(e) states the responsibilities and obligations, including as to costs, of all parties to a detail must be addressed in the written agreement. OPM will provide a sample written agreement and a set of frequently asked questions and answers guidance that will be posted on our Web site at *http://www.opm.gov*.

One agency asked if procedures for getting into the Program are negotiable with the union and, if so, how that affects a private sector organization that has no union.

Additionally, they suggested OPM address bargaining unit employees in the final regulations. Management selection of employees for this Program is not negotiable. However, selection procedures, to the extent consistent with applicable laws and Governmentwide rules and regulations, may be negotiable. Bargaining unit employees detailed under this Program are not part of the bargaining unit while on detail. OPM does not agree there is a need to address the impact of this Program on bargaining unit employees in the final regulations because the rules for bargaining unit employees detailed under this Program are not different from other details.

Two agencies recommended OPM clarify whether Federal employees who serve with private sector organizations do so without loss of Federal equal employment opportunity (EEO) rights and private sector individuals retain their EEO protections while on detail to the Federal Government. OPM believes it would be inappropriate to address these issues in regulation because EEO rights are conferred by the relevant EEO statutes and regulations.

Two agencies requested the final regulations include general guidelines outlining reasons for which these details may be terminated by the Federal agency, the private sector organization, or the employee. The Act includes such guidelines and we have added section 370.106(e) which states, ''Details may be terminated by the agency (agency head or designee) or private sector organization for any reason at any time.''

One agency suggested OPM include a clause precluding a private sector company from hiring a detailed Federal employee for a period of 1 year following separation from Federal employment. The agency stated such a clause would block private sector companies that may be able to offer higher salaries and other recruitment benefits from hiring Federal employees without the costs of advertising, interviewing, and obtaining security clearances. We are not adopting this suggestion because the Act does not give OPM the authority to preclude private sector organizations from hiring Federal employees. However, post-employment restrictions for certain Federal employees as well as restrictions for Federal employees seeking other employment exist in current statutes. For instance, post-Federal employment restrictions are in 18 U.S.C. 207; the prohibition on negotiating with certain persons for post-Federal employment while still a Federal employee is in 18 U.S.C. 208. In addition, section 370.105(d) requires Federal employees to return to their employing agencies upon completion of the detail.

One labor organization stated its opposition to the absence of regulatory language governing the behavior of private sector employers participating in this Program. OPM disagrees further clarification is necessary. Section 370.105 *Written Agreements* requires a three-part agreement which includes guidelines for private sector employer behavior and expectations as it relates to the detail. Agencies may add to the guidelines addressed in this section as appropriate.

Several agencies, as well as individuals, questioned the applicability of the legal and ethics provisions in the regulations to Federal and private sector employees. OPM notes the regulations state Federal employees remain subject to all legal and ethics provisions identified in the Act, and private sector employees detailed to Federal agencies under this part are considered Federal employees for the purposes of the legal and ethics provisions cited. Additionally, OPM will address these issues further in Questions and Answers guidance that will be posted on our Web site at *http://www.opm.gov.*

Small Business Concerns

One agency suggested we clarify whether reporting requirements in section 370.107 are based on the calendar or fiscal year. We agree that clarification is needed under the small business concern reporting requirement. Although the reporting requirement was referenced in the proposed regulation, for the convenience of the reader we have added section 370.107(c) which states, ''For the purposes of this section, 'year' refers to the 12-month period beginning on the date of the enactment of the Act, December 17, 2002, and each succeeding 12-month period in which any assignments are made.'' Additionally, we have clarified agencies' semiannual reporting requirements to OPM under section 370.108 *Reporting Requirements.*

Agency Plans

One agency commented OPM requires agencies to have plans in place before details may be approved although the Act does not require this. This agency stated there may be situations where agencies would want to begin details before formal plans are developed. OPM does not share this view, noting agency plans and written implementation standards are critical to the success and evaluation of this Program. Agency plans must be in place before an agency may engage in a detail under this part. OPM has exercised similar authority when implementing other programs such as the Student Loan Repayment and Academic Degree Programs.

A professional organization recommended OPM add a provision to encourage agencies to act expeditiously in drafting and approving a plan. This organization suggested OPM consider requiring agencies to complete their agency plans within a specific time frame, such as 120 days or 180 days. OPM is not adopting this recommendation because use of the Program is discretionary and plans are only needed if the agency chooses to establish a Program under the Act.

One agency suggested section 370.109(b) be re-phrased to read, ''The number of IT Exchange Candidates proposed for the agency,'' stating the phrase used in the proposed regulations could be construed to mean a number equal to an agency's entire IT staff. Another Federal agency suggested the requirement be eliminated from agencies' plans because IT requirements are constantly changing and plans of this nature are not frequently revised and could become outdated. OPM does not share this interpretation or view; agencies should craft and modify their plans based upon a realistic analysis of their IT workforce needs. However, to clarify the intent behind this section we have changed the language to read, ''Estimated number of candidates needed, both private sector and Federal employees, to address IT workforce needs within the agency.''

A labor organization commented on the absence of strategic goals for the Program stating without specific training goals, it will be difficult to determine if the Program has served its purpose. OPM disagrees additional language is needed in the regulation, and notes section 370.101(b) states the Governmentwide strategic goal for the Program. In addition, agency plans will address strategic goals for the Program to support the Governmentwide goal as applicable to individual agencies.

One agency requested we require agencies to compete detail opportunities using merit promotion procedures because details are considered to be career-enhancing. The agency also recommended we explain the types of recruitment methods to be used for attracting people to the Program. While the Act does not require details to be competed, nor is there a guarantee detailees would gain a competitive advantage in future merit promotion, we have modified section 370.109(c) to include provisions which require announcement, nomination, and review of nominations by appropriate selecting officials. Agencies will not be required to publish a formal vacancy announcement; something less formal is allowable. Agencies must publicize these opportunities; but how they do so is left up to the agencies. The modified language is flexible enough to allow agencies to establish their own criteria for announcing details.

Executive Order 12866, Regulatory Review

This final rule has been reviewed by the Office of Management and Budget in accordance with Executive Order 12866.

Regulatory Flexibility Act

I certify these regulations would not have a significant economic impact on a substantial number of small entities (including small businesses, small organizational units, and small governmental jurisdictions) because they would only apply to Federal agencies and employees.

List of Subjects in 5 CFR Part 370

Claims, Government employees, Reporting and recordkeeping requirements.

U.S. Office of Personnel Management.

Linda M. Springer,

Director.

■ Accordingly, OPM is adding part 370 to title 5 of the Code of Federal Regulations, as follows:

PART 370—INFORMATION TECHNOLOGY EXCHANGE PROGRAM

Sec.
370.101 Purpose.
370.102 Definitions.
370.103 Eligibility.
370.104 Length of details.
370.105 Written agreements.
370.106 Terms and conditions.
370.107 Details to small business concerns.
370.108 Reporting requirements.
370.109 Agency plans.

Authority: Pub. L. 107–347, 116 Stat. 2923–2931 (5 U.S.C. 3707).

§ 370.101 Purpose.

(a) The purpose of this part is to implement sections 209(b)(6) and (c) of the E-Government Act of 2002 (Pub. L. 107–347), which authorize the Office of Personnel Management to establish an Information Technology Exchange Program. This statute authorizes the temporary detail of information technology employees between the Federal Government and private sector organizations. The statute also gives Federal agencies the authority to accept private sector information technology employees detailed under the Information Technology Exchange Program.

(b) Agency heads, or their designees, may approve details as a mechanism for improving the Federal workforce's competency in using information technology to deliver Government information and services. Details under this part allow Federal employees to serve with private sector organizations for a limited time period without loss of employee rights and benefits. Agencies may not make details under this part to circumvent personnel ceilings, or as a substitute for other more appropriate personnel decisions or actions. Approved details must meet the strategic program goals of the agency. The benefits to the Federal agency and the private sector organization are the primary considerations in initiating details; not the desires or personal needs of an individual employee.

§ 370.102 Definitions.

In this part: *Agency* means an Executive agency as defined in 5 U.S.C. 105, with the exception of the Government Accountability Office.

Core Competencies are those IT competencies identified by the Federal Chief Information Officer (CIO) Council as a baseline for use by Federal agencies in complying with the Clinger-Cohen Act, Public Law 104–106, to determine the training and development needs of the Federal IT workforce.

Detail means: (1) The assignment or loan of an employee of an agency to a private sector organization without a change of position from the agency that employs the individual (5 U.S.C. 3701(2)(A)), or

(2) The assignment or loan of a private sector organization employee to an agency without a change of position from the private sector organization that employs the individual (5 U.S.C. 3701(2)(B)).

Exceptional employee means an employee who is rated at the highest levels of the applicable performance appraisal system or, in the case of an employee under an appraisal system that does not have a summary rating level above ''fully successful'' or equivalent, is rated at the highest summary level used by the performance appraisal system and demonstrates sustained quality performance significantly above that expected in the type of position involved, as determined under performance-related criteria established by the agency.

Information technology (IT) management means the planning, organizing, staffing, directing, integrating, or controlling of information technology as defined by Office of Management and Budget Circular A–130 which states, the term ''information technology'' means any equipment or interconnected system or subsystem of equipment, that is used in the automatic acquisition, storage, manipulation,

management, movement, control, display, switching, interchange, transmission, or reception of data or information by an executive agency. For purposes of the preceding sentence, equipment is used by an executive agency if the equipment is used by the executive agency directly or is used by a contractor under a contract with the executive agency which requires the use of such equipment, or requires the use, to a significant extent, of such equipment in the performance of a service or the furnishing of a product. The term ''information technology'' includes computers, ancillary equipment, software, firmware and similar procedures, services (including support services), and related resources. The term ''information technology'' does not include any equipment that is acquired by a Federal contractor incidental to a Federal contract. The term ''information technology'' does not include national security systems as defined in the Clinger-Cohen Act of 1996 (40 U.S.C. 1452).

OPM means the Office of Personnel Management.

Private sector organization means a profit-making business entity that is registered in the Central Contractor Registration Database (*http://www.ccr.gov*) as required for the conduct of business with the Government.

Small business concern means a business concern that satisfies the definitions and standards specified by the Administrator of the Small Business Administration (SBA), under section 3(a)(2) of the Small Business Act, codified at 13 CFR 121. Federal agencies can find more information through the ''Frequently Asked Questions'' page on the SBA's Web site at *http://www.sba.gov,* which addresses small business size standards.

§ 370.103 Eligibility.

(a) To be eligible for a detail under this part, an individual must:

(1) Work in the field of information technology management;

(2) Be considered an exceptional employee by the individual's current employer; and

(3) Be expected by the individual's current employer to assume increased information technology management responsibilities in the future.

(b) To be eligible for a detail under this part, a Federal employee, in addition to meeting the requirements of paragraph (a) of this section, must be serving in a position at the GS–11 level or above (or equivalent), under a career or career-conditional appointment or an appointment of equivalent tenure in the excepted service. For purposes of this part, positions of equivalent tenure in the excepted service are limited to permanent appointments. In addition, only career members of the Senior Executive Service are eligible to be detailed under this part.

(c) To be eligible to participate in the Information Technology Exchange Program, a private sector organization must be registered in the Central Contractor Registration Database located at *http://www.ccr.gov,* except as permitted by the Federal Acquisition Regulation (48 CFR 4.1102).

(d) To be eligible for a detail to a Federal agency under this part, a private sector employee, in addition to meeting the requirements of paragraph (a) of this section, must meet citizenship requirements for Federal employment in accordance with 5 CFR 7.3 and 338.101, as well as any other statutory limitation.

§ 370.104 Length of details.

(a) Details may be for a period of between 3 months and 1 year, and may be extended in 3-month increments for a total of not more than 1 additional year, in accordance with 5 U.S.C. 3702(d).

(b) Agencies may not approve or extend details after December 17, 2007. An individual serving on a detail prior to this date may continue to do so as long as the detail began or was extended on or before December 17, 2007.

(c) For the life of the ITEP, a Federal agency may not send on assignment an employee who has served on a detail under this part for more than 6 years during his or her Federal career. OPM may waive this provision upon request of the agency head, or his or her designee.

§ 370.105 Written agreements.

Before the detail begins, the agency and private sector organization must enter into a written agreement with the individual(s) detailed. The written agreement must be a three-party agreement between the Federal agency (agency head or designee), the individual (private sector or Federal), and the private sector organization. The written agreement must include, but is not limited to, the following elements:

(a) The duties to be performed, duration, and terms under which extensions to the detail may be granted;

(b) An individual development plan describing the core IT competencies and technical skills that the detailee will be expected to enhance or acquire;

(c) Whether the individual will be supervised by a Federal or private sector employee; and a description of the supervision;

(d) The requirement for Federal employees to return to their employing agency upon completion of the detail for a period equal to the length of the detail including any extensions; and

(e) The obligations and responsibilities of all parties as described in 5 U.S.C. 3702 through 3704.

§ 370.106 Terms and conditions.

(a) A Federal employee detailed under this part:

(1) Remains a Federal employee without loss of employee rights and benefits attached to that status. These include, but are not limited to:

(i) Consideration for promotion;

(ii) Leave accrual;

(iii) Continuation of retirement benefits and health, life, and long-term care insurance benefits; and

(iv) Pay increases the employee otherwise would have received if he or she had not been detailed;

(2) Remains covered for purposes of the Federal Tort Claims Act, and for purposes of injury compensation as described in 5 U.S.C. chapter 81; and

(3) Is subject to any action that may impact the employee's position while he or she is detailed.

(b) An individual detailed from a private sector organization under this part:

(1) Is deemed to be an employee of the Federal agency for purposes of:

(i) Title 5, United States Code, chapter 73 (Suitability, Security, and Conduct);

(ii) Title 18, United States Code, section 201 (Bribery of Public Officials and Witnesses), section 203 (Compensation to Members of Congress, Officers, and Others in Matters Affecting the Government), section 205 (Activities of Officers and Employees in Claims Against and Other Matters Affecting the Government), section 207 (Restrictions on Former Officers, Employees, and Elected Officials of the Executive and Legislative Branches), section 208 (Acts Affecting a Personal Financial Interest), section 209 (Salary of Government Officials and Employees Payable Only by the United States), section 603 (Making Political Contributions), section 606 (Intimidation to Secure Political Contributions), section 607 (Place of Solicitation), section 643 (Accounting Generally for Public Money), section 654 (Officer or Employee of United States Converting Property of Another), section 1905 (Disclosure of Confidential Information Generally), and section 1913 (Lobbying with Appropriated Moneys);

(iii) Title 31, United States Code, section 1343 (Buying and Leasing Passenger Motor Vehicles and Aircraft),

section 1344 (Passenger Carrier Use), and section 1349(b), (Adverse Personnel Actions);

(iv) The Federal Tort Claims Act and any other Federal tort liability statute;

(v) The Ethics in Government Act of 1978;

(vi) Internal Revenue Code of 1986, section 1043 (Sale of Property to Comply with Conflict-of-Interest Requirements); and

(vii) Title 41, United States Code, section 423 (Prohibition on Former Official's Acceptance of Compensation From Contractor).

(2) Does not have any right or expectation for Federal employment solely on the basis of his or her detail;

(3) May not have access to any trade secrets or to any other nonpublic information which is of commercial value to the private sector organization from which he or she is detailed;

(4) Is subject to such regulations as the President may prescribe; and

(5) Is covered by 5 U.S.C. chapter 81, Compensation for Work Injuries, as provided in 5 U.S.C. 3704(c).

(c) Individuals detailed under this part may be supervised either by Federal or private sector managers. For example, a Federal employee on detail to a private sector organization may be supervised by a private sector manager. Likewise, a private sector employee on detail to an agency may be supervised by a Federal manager.

(d) As provided in 5 U.S.C. 3704(d), a private sector organization may not charge the Federal Government, as direct or indirect costs under a Federal contract, for the costs of pay or benefits paid by that private sector organization to an employee detailed to an agency under this part.

(e) Details may be terminated by the agency (agency head or designee) or private sector organization concerned for any reason at any time.

§ 370.107 Details to small business concerns.

(a) The head of each agency must take such actions as may be necessary to ensure that, of the details made to private sector organizations in each calendar year, at least 20 percent are to small business concerns, in accordance with 5 U.S.C. 3703(e)(1).

(b) Agencies must round up to the nearest whole number when calculating the percentage of details to small business concerns needed to meet the requirements of this section. For example, if an agency detailed 11 individuals to private sector organizations during a given year, to meet the 20 percent requirement, that agency must have made at least 3 (rounded up from 2.2) of these details to small business concerns.

(c) For purposes of this section, ''year'' refers to the 12-month period beginning on date of the enactment of the Act, December 17, 2002, and each succeeding 12-month period in which any assignments are made. Assignments ''made'' in a year are those commencing in such year, in accordance with 5 U.S.C. 3703(e)(2).

(d) Agencies that do not meet the requirements of this section are subject to the reporting requirements in 5 U.S.C. 3703(e)(3).

(e) An agency that makes fewer than five details to private sector organizations in any year is not subject to this section.

§ 370.108 Reporting requirements.

(a) Agencies using this part must prepare and submit to OPM semiannual reports in accordance with 5 U.S.C. 3706 which must include:

(1) The total number of individuals detailed to, and the total number of individuals detailed from, the agency during the report period;

(2) A brief description of each detail reported under paragraph (a)(1) of this section including:

(i) The name of the detailed individual, and the private sector organization and the agency (including the specific bureau or other agency component) to or from which such individual was detailed;

(ii) The respective positions to and from which the individual was detailed, including the duties and responsibilities and the pay grade or level associated with each; and

(iii) The duration and objectives of the individual's detail; and

(3) Such other information as OPM considers appropriate.

(b) Reports are due to OPM no later than April 7 and October 7 of each year for the immediately preceding 6-month periods ending March 31 and September 30, respectively.

(c) Agencies that do not meet the requirements of § 370.107 must prepare and submit annual reports to Congress in accordance with 5 U.S.C. 3703(e)(3), as appropriate.

§ 370.109 Agency plans.

Before detailing agency employees or receiving private sector employees under this part, an agency must establish an Information Technology Exchange Program Plan. The plan must include, but is not limited to, the following elements:

(a) Designation of the agency officials with authority to review and approve details;

(b) Estimated number of candidates needed, both private sector and Federal employees, to address IT workforce needs within the agency;

(c) Criteria for the selection of agency employees for a detail under this part. At a minimum, each agency must:

(1) Announce the detail, including eligibility requirements, to all eligible employees;

(2) Provide for employee nomination by their organization or self-nomination, to include endorsement by their respective supervisor;

(3) Forward nominations to designated agency reviewing and approving official for final selection.

(4) Consider:

(i) The extent to which the employee's current competencies and skills are being utilized in the agency;

(ii) The employee's capability to improve, enhance, or learn skills and acquire competencies needed in the agency; and

(iii) The benefits to the agency which would result from selecting the employee for detail.

(d) Return rights and continuing service requirements for Federal employees returning from a detail; and

(e) Documentation and recordkeeping requirements sufficient to allow reconstruction of each action taken under this part to meet agency reporting requirements under § 370.108(a) and (b).

[FR Doc. 05–16092 Filed 8–12–05; 8:45 am]

BILLING CODE 6325–39–P

DEPARTMENT OF TRANSPORTATION

Federal Aviation Administration

14 CFR Part 39

[Docket No. FAA–2005–20515; Directorate Identifier 2005–CE–09–AD; Amendment 39–14221; AD 2005–17–01]

RIN 2120–AA64

Airworthiness Directives; Pilatus Aircraft Ltd. Models PC–6, PC–6–H1, PC–6–H2, PC–6/350, PC–6/350–H1, PC–6/350–H2, PC–6/A, PC–6/A–H1, PC–6/A–H2, PC–6/B–H2, PC–6/B1–H2, PC–6/B2–H2, PC–6/B2–H4, PC–6/C–H2, and PC–6/C1–H2 Airplanes

AGENCY: Federal Aviation Administration (FAA), DOT.

ACTION: Final rule.

SUMMARY: The FAA adopts a new airworthiness directive (AD) for all Pilatus Aircraft Ltd. (Pilatus) (also identified as Fairchild Republic Company and Fairchild Heli Porter) Model PC–6 airplanes. This AD requires

you to repetitively inspect the stabilizer-trim attachment and structural components for cracks, corrosion, and discrepancies and replace any defective part with a new part. This AD also requires you to replace all Fairchild connecting pieces, part number (P/N) 6232.0026.XX, with a Pilatus connecting piece and requires you to replace fittings without an index after the P/N with an improved part. This AD results from mandatory continuing airworthiness information (MCAI) issued by the airworthiness authority for Switzerland. We are issuing this AD to detect and correct defective stabilizer-trim attachments and surrounding structural components, which could result in failure of the stabilizer-trim attachment. This failure could lead to loss of control of the airplane.

DATES: This AD becomes effective on September 29, 2005.

As of September 29, 2005, the Director of the Federal Register approved the incorporation by reference of certain publications listed in the regulation.

ADDRESSES: To get the service information identified in this AD, contact Pilatus Aircraft Ltd., Customer Liaison Manager, CH–6371 Stans, Switzerland; telephone: +41 41 619 6580; facsimile: +41 41 619 6576.

To view the AD docket, go to the Docket Management Facility; U.S. Department of Transportation, 400 Seventh Street, SW., Nassif Building, Room PL–401, Washington, DC 20590–001 or on the Internet at *http://dms.dot.gov.* The docket number is FAA–2005–20515; Directorate Identifier 2005–CE–09–AD.

FOR FURTHER INFORMATION CONTACT: Doug Rudolph, Aerospace Engineer, FAA, Small Airplane Directorate, 901 Locust, Room 301, Kansas City, Missouri 64106; telephone: (816) 329–4059; facsimile: (816) 329–4090.

SUPPLEMENTARY INFORMATION:

Discussion

What events have caused this AD? The Federal Office for Civil Aviation (FOCA), which is the airworthiness authority for Switzerland, recently notified FAA that an unsafe condition may exist on all Pilatus Model PC–6 airplanes. The FOCA reports that the lower attachment bracket of the horizontal stabilizer actuator broke, which resulted in an emergency landing outside the airport.

The FOCA also reports two other instances of total failure of the stabilizer trim attachment on in-service airplanes.

What is the potential impact if FAA took no action? If not detected and corrected, defects in the stabilizer-trim attachment and surrounding structural components could cause the stabilizer-trim attachment to fail. This failure could lead to loss of control of the airplane.

Has FAA taken any action to this point? We issued a proposal to amend part 39 of the Federal Aviation Regulations (14 CFR part 39) to include an AD that would apply to all Pilatus Model PC–6 airplanes. This proposal was published in the **Federal Register** as a notice of proposed rulemaking (NPRM) on March 24, 2005 (70 FR 15019). The NPRM proposed to require you to:

—Inspect the stabilizer-trim attachment and structural components (the fitting, the connecting piece, the bearing fork, the bearing support assembly, and the auxiliary frame, as applicable) for cracks and corrosion;
—Inspect the diameters of the boltholes on the fittings, auxiliary frame, and connecting piece (as applicable) for discrepancies;
—Replace any cracked, corroded, or defective part with a new part; and
—Replace all Fairchild connecting pieces with a Pilatus connecting piece.

We received comments on the NPRM requesting the following:

—Incorporate revised service to include a procedure for replacing certain fittings with an improved part and to correct the allowable limits of the actuator attachment hole diameters;
—Change the repetitive inspection intervals; and
—Clarify the applicability of the affected airplanes.

As a result of the above comments, we issued a supplemental NPRM that was published in the **Federal Register** on June 14, 2005 (34401). The Supplemental NPRM proposed to require you to:

—Inspect the stabilizer-trim attachment and structural components (the fitting, the connecting piece, the bearing fork, the bearing support assembly, and the auxiliary frame, as applicable) for cracks and corrosion;
—Inspect the diameters of the boltholes on the fittings, auxiliary frame, and connecting piece (as applicable) for discrepancies;
—Replace any cracked part with a new part;
—Repair or replace corroded or defective part;
—Replace all Fairchild connecting pieces, P/N 6232.0026.XX with a Pilatus connecting piece. The Fairchild part has a rivet in the middle that is not on the Pilatus part; and
—Replace all fittings, P/N 116.40.06.033 without an index after the P/N with an improved part, P/N 116.40.06.033 with an index after the P/N or P/N 116.40.06.112.

Comments

Was the public invited to comment? We provided the public the opportunity to participate in developing this AD.

Pilatus Aircraft Ltd. submitted a comment stating that they have no further comments on the Supplemental NPRM.

Comment Issue: Update Reference to the Swiss AD

What is the commenter's concern? FOCA has superseded Swiss AD HB–2005–080, effective date March 2, 2005, with Swiss AD HB–2005–263, effective date June 16, 2005.

The commenter requests that the reference to the Swiss AD be changed to incorporate the new AD number.

What is FAA's response to the concern? We concur with the commenter and will change the final rule AD action.

What is FAA's final determination on this issue? We have carefully reviewed the available data and determined that air safety and the public interest require adopting the AD as proposed except for the changes discussed above and minor editorial corrections. We have determined that these changes and minor corrections:

—Are consistent with the intent that was proposed in the NPRM for correcting the unsafe condition; and
—Do not add any additional burden upon the public than was already proposed in the NPRM.

Docket Information

Where can I go to view the docket information? You may view the AD docket that contains information relating to this subject in person at the DMS Docket Offices between 9 a.m. and 5 p.m. (eastern standard time), Monday through Friday, except Federal holidays. The Docket Office (telephone 1–800–647–5227) is located on the plaza level of the Department of Transportation NASSIF Building at the street address stated in **ADDRESSES.** You may also view the AD docket on the Internet at *http://dms.dot.gov.*

Changes to 14 CFR Part 39—Effect on the AD

How does the revision to 14 CFR part 39 affect this AD? On July 10, 2002, the FAA published a new version of 14 CFR part 39 (67 FR 47997, July 22, 2002),

which governs the FAA's AD system. This regulation now includes material that relates to altered products, special flight permits, and alternative methods of compliance. This material previously was included in each individual AD. Since this material is included in 14 CFR part 39, we will not include it in future AD actions.

Costs of Compliance

How many airplanes does this AD impact? We estimate that this AD affects 41 airplanes in the U.S. registry.

What is the cost impact of this AD on owners/operators of the affected airplanes? We estimate the following costs to do the inspections:

Labor cost	Parts cost	Total cost per airplane	Total cost on U.S. operators
11 work hours × $65 per hour = $715	Not applicable	$715	$715 × 41 = $29,315

We estimate the following costs to do any necessary replacements that will be required based on the results of the inspections. We have no way of determining the number of airplanes that may need these replacements:

Labor cost	Parts cost	Total cost per airplane to replace all parts
10 work hours × $65 = $650	$2,000 to replace all parts	$650 + $2,000 = $2,650

Authority for This Rulemaking

What authority does FAA have for issuing this rulemaking action? Title 49 of the United States Code specifies the FAA's authority to issue rules on aviation safety. Subtitle I, section 106 describes the authority of the FAA Administrator. Subtitle VII, Aviation Programs, describes in more detail the scope of the agency's authority.

We are issuing this rulemaking under the authority described in subtitle VII, part A, subpart III, section 44701, ''General requirements.'' Under that section, Congress charges the FAA with promoting safe flight of civil aircraft in air commerce by prescribing regulations for practices, methods, and procedures the Administrator finds necessary for safety in air commerce. This regulation is within the scope of that authority because it addresses an unsafe condition that is likely to exist or develop on products identified in this AD.

Regulatory Findings

Will this AD impact various entities? We have determined that this AD will not have federalism implications under Executive Order 13132. This AD will not have a substantial direct effect on the States, on the relationship between the national government and the States, or on the distribution of power and responsibilities among the various levels of government.

Will this AD involve a significant rule or regulatory action? For the reasons discussed above, I certify that this AD:

1. Is not a ''significant regulatory action'' under Executive Order 12866;

2. Is not a ''significant rule'' under the DOT Regulatory Policies and Procedures (44 FR 11034, February 26, 1979); and

3. Will not have a significant economic impact, positive or negative, on a substantial number of small entities under the criteria of the Regulatory Flexibility Act.

We prepared a summary of the costs to comply with this AD (and other information as included in the Regulatory Evaluation) and placed it in the AD Docket. You may get a copy of this summary by sending a request to us at the address listed under **ADDRESSES.** Include ''Docket No. FAA–2005–20515; Directorate Identifier 2005–CE–09–AD'' in your request.

List of Subjects in 14 CFR Part 39

Air transportation, Aircraft, Aviation safety, Incorporation by reference, Safety.

Adoption of the Amendment

■ Accordingly, under the authority delegated to me by the Administrator, the Federal Aviation Administration amends part 39 of the Federal Aviation Regulations (14 CFR part 39) as follows:

PART 39—AIRWORTHINESS DIRECTIVES

■ 1. The authority citation for part 39 continues to read as follows:

Authority: 49 U.S.C. 106(g), 40113, 44701.

§ 39.13 [Amended]

■ 2. FAA amends § 39.13 by adding a new AD to read as follows:

2005–17–01 Pilatus Aircraft Ltd.: Amendment 39–14221; Docket No. FAA–2005–20515; Directorate Identifier 2005–CE–09–AD.

When Does This AD Become Effective?

(a) This AD becomes effective on September 29, 2005.

What Other ADs Are Affected By This Action?

(b) None.

What Airplanes Are Affected by This AD?

(c) This AD affects the following airplanes, all manufacturer serial numbers (MSN), that are certificated in any category.

Note 1: These airplanes are also identified as Fairchild Republic Company PC–6 series airplanes and Fairchild Heli Porter PC–6 series airplanes.

Models
(1) PC–6
(2) PC–6–H1
(3) PC–6–H2
(4) PC–6/350
(5) PC–6/350–H1
(6) PC–6/350–H2
(7) PC–6/A
(8) PC–6/A–H1
(9) PC–6/A–H2
(10) PC–6/B–H2
(11) PC–6/B1–H2
(12) PC–6/B2–H2
(13) PC–6/B2–H4
(14) PC–6/C–H2
(15) PC–6/C1–H2

What Is the Unsafe Condition Presented in This AD?

(d) This AD is the result of mandatory continuing airworthiness information (MCAI) issued by the airworthiness authority for Switzerland. We are issuing this AD to detect and correct cracks in the stabilizer-trim attachment and surrounding structural components, which could result in failure of the stabilizer-trim attachment. This failure could lead to loss of control of the airplane.

What Must I Do To Address This Problem?

(e) To address this problem, you must do the following:

Actions	Compliance	Procedures
(1) Inspect the following: (i) the stabilizer-trim attachment and structural components (fitting, connecting piece, bearing fork, bearing support assembly, and auxiliary frame, as applicable) for cracks and corrosion; and. (ii) the diameters of the actuator attachment bolt holes on the fittings, auxiliary frame, and connecting piece (as applicable) for discrepancies.	Within the next 100 hours time-in-service (TIS) after September 29, 2005 (the effective date of this AD). Repetitively inspect thereafter at intervals not-to-exceed 3,500 hours TIS or 7 years, whichever occurs first.	Follow Pilatus PC–6 Service Bulletin No. 53–001, Rev. No. 1, dated June 1, 2005.
(2) If cracks are found during any inspection required in paragraph (e)(1)(i) of this AD, replace the defective part with a new part.	Replace the defective part before further flight after the inspection in which cracks are found. After each replacement, continue with the repetitive inspection requirement in paragraph (e)(1) of this AD.	Follow Pilatus PC–6 Service Bulletin No. 53–001, Rev. No. 1, dated June 1, 2005.
(3) If corrosion or discrepancies are found during any inspection required in paragraphs (e)(1)(i) and (e)(1)(ii) of this AD, do the following: (i) replace the defective part with a new part if the corrosion or discrepancy is beyond the repairable limits stated in the service information; or. (ii) repair the defective part if the corrosion or discrepancy is within the repairable limits stated in the service information.	Replace or repair the defective part before further flight after the inspection in which corrosion or discrepancies are found. After each replacement or repair, continue with the repetitive inspection requirement in paragraph (e)(1) of this AD.	Follow Pilatus PC–6 Service Bulletin No. 53–001, Rev. No. 1, dated June 1, 2005.
(4) Replace the following: (i) all Fairchild connecting pieces, part number (P/N) 6232.0026.XX, with a Pilatus connecting piece, P/N 6232.0026.XX. The Fairchild part has a rivet in the middle that is not on the Pilatus part; and. (ii) all fittings, P/N 116.40.06.033 without an index after the P/N, with an improved part, P/N 116.40.06.033 with an index of "A" or "B" after the P/N or with P/N 116.40.06.112.	Within the next 100 hours TIS after September 29, 2005 (the effective date of this AD). After replacement, repetitively inspect thereafter at intervals not-to-exceed 3,500 hours TIS or 7 years, whichever occurs first. If after the inspection required in paragraph (e)(1) of this AD, you determine that you already have a P/N 116.40.06.033 with an index of "A" or "B" or a P/N 116.40.06.112 installed, repetitively inspect thereafter at intervals not-to-exceed 3,500 hours TIS or 7 years, whichever occurs first after the part was installed.	Follow Pilatus PC–6 Service Bulletin No. 53–001, Rev. No. 1, dated June 1, 2005.
(5) Do not install any of the following: (i) Fairchild connecting piece, P/N 6232.0026.XX (it has a rivet in the middle that is not on the Pilatus part); and. (ii) fitting, P/N 116.40.06.033, without an index after the part number.	As of September 29, 2005 (the effective date of this AD).	Follow Pilatus PC–6 Service Bulletin No. 53–001, Rev. No. 1, dated June 1, 2005.

Note 2: Even though not required in this AD, the FAA recommends that you send all defective parts to Pilatus at the address specified in paragraph (h) of this AD. With the part, include the aircraft serial number, flying hours, and cycles.

May I Request an Alternative Method of Compliance?

(f) You may request a different method of compliance or a different compliance time for this AD by following the procedures in 14 CFR 39.19. Unless FAA authorizes otherwise, send your request to your principal inspector. The principal inspector may add comments and will send your request to the Manager, Standards Office, Small Airplane Directorate, FAA. For information on any already approved alternative methods of compliance, contact Doug Rudolph, Aerospace Engineer, FAA, Small Airplane Directorate, 901 Locust, Room 301, Kansas City, Missouri 64106; telephone: (816) 329–4059; facsimile: (816) 329–4090.

Is There Other Information That Relates to This Subject?

(g) Swiss AD HB–2005–263, effective date June 16, 2005, also addresses the subject of this AD.

Does This AD Incorporate Any Material by Reference?

(h) You must do the actions required by this AD following the instructions in Pilatus PC–6 Service Bulletin No. 53–001, Rev. No. 1, dated June 1, 2005. The Director of the Federal Register approved the incorporation by reference of this service bulletin in accordance with 5 U.S.C. 552(a) and 1 CFR part 51. To get a copy of this service information, contact Pilatus Aircraft Ltd., Customer Liaison Manager, CH–6371 Stans, Switzerland; telephone: +41 41 619 6580; facsimile: +41 41 619 6576. To review copies of this service information, go to the National Archives and Records Administration (NARA). For information on the availability of this material at NARA, go to: *http://www.archives.gov/federal_register/code_of_federal_regulations/ibr_locations.html* or call (202) 741–6030. To view the AD docket, go to the Docket Management Facility; U.S. Department of Transportation, 400 Seventh Street, SW., Nassif Building, Room PL–401, Washington, DC 20590–001 or on the Internet at *http://dms.dot.gov*. The docket number is FAA–2005–20515; Directorate Identifier 2005–CE–09–AD.

Issued in Kansas City, Missouri, on August 8, 2005.

Kim Smith,

Acting Manager, Small Airplane Directorate, Aircraft Certification Service.

[FR Doc. 05–16000 Filed 8–12–05; 8:45 am]

BILLING CODE 4910–13–P

DEPARTMENT OF TRANSPORTATION

Federal Aviation Administration

14 CFR Part 39

[Docket No. FAA–2005–22073; Directorate Identifier 2005–NM–140–AD; Amendment 39–14219; AD 2005–16–13]

RIN 2120–AA64

Airworthiness Directives; Gulfstream Aerospace LP Model Galaxy and Gulfstream 200 Airplanes

AGENCY: Federal Aviation Administration (FAA), Department of Transportation (DOT).

ACTION: Final rule; request for comments.

SUMMARY: The FAA is adopting a new airworthiness directive (AD) for certain Gulfstream Aerospace LP Model Galaxy and Gulfstream 200 airplanes. This AD requires a one-time general visual inspection for any damaged wiring, splice, connector, and pins for the fuel standby feed pumps and replacement of any damaged wiring, splice, connector, or pin. This AD also requires replacement of the power and ground wires for the fuel standby feed pumps. This AD results from reports of evidence of overheating found on the feeder wires of the left and right fuel standby feed pumps. We are issuing this AD to detect and correct damaged wiring for the fuel standby feed pumps, which could result in an ignition source in an area where fuel vapor may be present, and a consequent fire or explosion.

DATES: *Effective Date:* August 30, 2005.

The Director of the Federal Register approved the incorporation by reference of a certain publication listed in the AD as of August 30, 2005.

We must receive comments on this AD by October 14, 2005.

ADDRESSES: Use one of the following addresses to submit comments on this AD.

- DOT Docket Web site: Go to *http://dms.dot.gov* and follow the instructions for sending your comments electronically.
- Government-wide rulemaking Web site: Go to *http://www.regulations.gov* and follow the instructions for sending your comments electronically.
- Mail: Docket Management Facility; U.S. Department of Transportation, 400 Seventh Street SW., Nassif Building, Room PL–401, Washington, DC 20590.
- Fax: (202) 493–2251.
- Hand Delivery: Room PL–401 on the plaza level of the Nassif Building, 400 Seventh Street SW., Washington, DC, between 9 a.m. and 5 p.m., Monday through Friday, except Federal holidays.

Contact Gulfstream Aerospace Corporation, P.O. Box 2206, Mail Station D–25, Savannah, Georgia 31402–2206, for service information identified in this AD.

FOR FURTHER INFORMATION CONTACT: Dan Rodina, Aerospace Engineer, International Branch, ANM–116, FAA, Transport Airplane Directorate, 1601 Lind Avenue, SW., Renton, Washington 98055–4056; telephone (425) 227–2125; fax (425) 227–1149.

SUPPLEMENTARY INFORMATION:

Discussion

The Civil Aviation Administration of Israel (CAAI), which is the airworthiness authority for Israel, notified us that an unsafe condition may exist on certain Gulfstream Aerospace LP Model Galaxy and Gulfstream 200 airplanes. The CAAI advises that, while troubleshooting a fuel quantity indication condition on a Model Gulfstream 200 airplane, technicians found evidence of overheating on the feeder wires splice of the left fuel standby feed pump 3Q1. Subsequent investigation revealed a similar condition in the wiring of the left and right fuel standby feed pumps of four other Model Gulfstream 200 airplanes. This condition, if not corrected, could result in an ignition source in an area where fuel vapor may be present, and a consequent fire or explosion.

The subject fuel standby feed pump wiring on Model Galaxy airplanes is identical to that on the affected Model Gulfstream 200 airplanes. Therefore, both of these models may be subject to the same unsafe condition.

Relevant Service Information

Gulfstream Aerospace LP has issued Alert Service Bulletin 200–28A–261, dated June 7, 2005. The alert service bulletin describes procedures for performing a visual inspection of the wiring, splice, connector, and pins for the left (3Q1) and right (4Q1) fuel standby feed pumps for damage, and for replacing any damaged wiring, splice, connector, or pin with a new wire, splice, connector, or pin, as applicable. Damage includes evidence of overheating and worn or chafed insulation. The alert service bulletin also describes procedures for replacing the power and ground wires for the fuel standby feed pumps with 12-American-Wire-Gauge (AWG) wires. Accomplishing the actions specified in the service information is intended to adequately address the unsafe condition.

The CAAI mandated the alert service bulletin and issued Israeli airworthiness directive 28–05–06–08, dated July 3, 2005, to ensure the continued airworthiness of these airplanes in Israel.

FAA's Determination and Requirements of This AD

These airplane models are manufactured in Israel and are type certificated for operation in the United States under the provisions of section 21.29 of the Federal Aviation Regulations (14 CFR 21.29) and the applicable bilateral airworthiness agreement. Pursuant to this bilateral airworthiness agreement, the CAAI has kept the FAA informed of the situation described above. We have examined the CAAI's findings, evaluated all pertinent information, and determined that we need to issue an AD for products of this type design that are certificated for operation in the United States.

Therefore, we are issuing this AD to detect and correct any damaged wiring, splice, connector, or pin for the fuel standby feed pumps, which could result in an ignition source in an area where fuel vapor may be present, and a consequent fire or explosion. This AD requires accomplishing the actions specified in the service information described previously, except as discussed under ''Differences Between the AD and Alert Service Bulletin''.

Clarification of Inspection in the Israeli Airworthiness Directive

The Israeli airworthiness directive states only to ''inspect'' the wiring; it does not define what type of inspection should be done. We have determined that the inspection in the Israeli airworthiness directive should be described as a ''general visual inspection.'' Note 1 has been included in this AD to define this type of inspection.

Differences Between the AD and Alert Service Bulletin

The Accomplishment Instructions of Gulfstream Alert Service Bulletin 200–28A–261, dated June 7, 2005, instruct operators to inspect the wiring for worn or chafed insulation; however, it gives no repair instructions if any worn or chafed insulation is found. This AD requires operators to replace any wiring

found with worn or chafed insulation with new wiring. This difference has been coordinated with the CAAI.

The Accomplishment Instructions of Gulfstream Alert Service Bulletin 200–28A–261, dated June 7, 2005, instruct operators to complete and return a Service Reply Card to Gulfstream Aerospace LP. This AD does not include that requirement.

FAA's Determination of the Effective Date

An unsafe condition exists that requires the immediate adoption of this AD; therefore, providing notice and opportunity for public comment before the AD is issued is impracticable, and good cause exists to make this AD effective in less than 30 days.

Comments Invited

This AD is a final rule that involves requirements that affect flight safety and was not preceded by notice and an opportunity for public comment; however, we invite you to submit any relevant written data, views, or arguments regarding this AD. Send your comments to the address listed under the **ADDRESSES** section. Include ''Docket No. FAA–2005–22073; Directorate Identifier 2005–NM–140–AD'' at the beginning of your comments. We specifically invite comments on the overall regulatory, economic, environmental, and energy aspects of the AD that might suggest a need to modify it.

We will post all comments we receive, without change, to *http://dms.dot.gov*, including any personal information you provide. We will also post a report summarizing each substantive verbal contact with FAA personnel concerning this AD. Using the search function of that Web site, anyone can find and read the comments in any of our dockets, including the name of the individual who sent the comment (or signed the comment on behalf of an association, business, labor union, etc.). You may review the DOT's complete Privacy Act Statement in the **Federal Register** published on April 11, 2000 (65 FR 19477–78), or you may visit *http://dms.dot.gov.*

Examining the Docket

You may examine the AD docket on the Internet at *http://dms.dot.gov*, or in person at the Docket Management Facility office between 9 a.m. and 5 p.m., Monday through Friday, except Federal holidays. The Docket Management Facility office (telephone (800) 647–5227) is located on the plaza level of the Nassif Building at the DOT street address stated in the **ADDRESSES** section. Comments will be available in the AD docket shortly after the Docket Management System receives them.

Authority for This Rulemaking

Title 49 of the United States Code specifies the FAA's authority to issue rules on aviation safety. Subtitle I, Section 106, describes the authority of the FAA Administrator. Subtitle VII, Aviation Programs, describes in more detail the scope of the Agency's authority.

We are issuing this rulemaking under the authority described in Subtitle VII, Part A, Subpart III, Section 44701, ''General requirements.'' Under that section, Congress charges the FAA with promoting safe flight of civil aircraft in air commerce by prescribing regulations for practices, methods, and procedures the Administrator finds necessary for safety in air commerce. This regulation is within the scope of that authority because it addresses an unsafe condition that is likely to exist or develop on products identified in this rulemaking action.

Regulatory Findings

We have determined that this AD will not have federalism implications under Executive Order 13132. This AD will not have a substantial direct effect on the States, on the relationship between the National Government and the States, or on the distribution of power and responsibilities among the various levels of government.

For the reasons discussed above, I certify that the regulation:

1. Is not a ''significant regulatory action'' under Executive Order 12866;

2. Is not a ''significant rule'' under the DOT Regulatory Policies and Procedures (44 FR 11034, February 26, 1979); and

3. Will not have a significant economic impact, positive or negative, on a substantial number of small entities under the criteria of the Regulatory Flexibility Act.

We prepared a regulatory evaluation of the estimated costs to comply with this AD and placed it in the AD docket. See the **ADDRESSES** section for a location to examine the regulatory evaluation.

List of Subjects in 14 CFR Part 39

Air transportation, Aircraft, Aviation safety, Incorporation by reference, Safety.

Adoption of the Amendment

■ Accordingly, under the authority delegated to me by the Administrator, the FAA amends 14 CFR part 39 as follows:

PART 39—AIRWORTHINESS DIRECTIVES

■ 1. The authority citation for part 39 continues to read as follows:

Authority: 49 U.S.C. 106(g), 40113, 44701.

§ 39.13 [Amended]

■ 2. The Federal Aviation Administration (FAA) amends § 39.13 by adding the following new airworthiness directive (AD):

2005–16–13 Gulfstream Aerospace LP (Formerly Israel Aircraft Industries, Ltd.): Amendment 39–14219; Docket No. FAA–2005–22073; Directorate Identifier 2005–NM–140–AD.

Effective Date

(a) This AD becomes effective August 30, 2005.

Affected ADs

(b) None.

Applicability

(c) This AD applies to Gulfstream Model Galaxy and Gulfstream 200 airplanes, having serial numbers 004 through 113 inclusive, certificated in any category.

Unsafe Condition

(d) This AD results from reports of evidence of overheating found on the feeder wires of the left and right fuel standby feed pumps. We are issuing this AD to detect and correct any damaged wiring, splice, connector, or pin for the fuel standby feed pumps, which could result in an ignition source in an area where fuel vapor may be present, and a consequent fire or explosion.

Compliance

(e) You are responsible for having the actions required by this AD performed within the compliance times specified, unless the actions have already been done.

Service Bulletin Reference

(f) The term ''alert service bulletin,'' as used in this AD, means the Accomplishment Instructions of Gulfstream Alert Service Bulletin 200–28A–261, dated June 7, 2005. Although the alert service bulletin referenced in this AD specifies to submit information to the manufacturer, this AD does not include that requirement.

Inspection of the Wiring for the Fuel Standby Feed Pumps

(g) Within 25 flight hours after the effective date of this AD: Perform a general visual inspection to detect damage of the wiring, splice, connector, or pins of the left and right fuel standby feed pumps, in accordance with the alert service bulletin.

Note 1: For the purposes of this AD, a general visual inspection is: ''A visual examination of an interior or exterior area, installation, or assembly to detect obvious damage, failure, or irregularity. This level of inspection is made from within touching distance unless otherwise specified. A mirror may be necessary to ensure visual access to all surfaces in the inspection area. This level

of inspection is made under normally available lighting conditions such as daylight, hangar lighting, flashlight, or droplight and may require removal or opening of access panels or doors. Stands, ladders, or platforms may be required to gain proximity to the area being checked.''

(1) If no damage is found: No further work is required by this paragraph.

(2) If any damage is found: Before further flight, replace the damaged wiring (including wiring with worn or chafed insulation), splice, connector, or pin with a new wiring, splice, connector or pin, as applicable, in accordance with the alert service bulletin.

Power and Ground Wire Replacement

(h) Within 25 flight hours after the effective date of this AD: Replace the power and ground wires of the left and right fuel standby feed pumps with new, 12-American-Wire-Gauge (AWG) wires, in accordance with the alert service bulletin.

Alternative Methods of Compliance (AMOCs)

(i) The Manager, International Branch, ANM–116, Transport Airplane Directorate, FAA, has the authority to approve AMOCs for this AD, if requested in accordance with the procedures found in 14 CFR 39.19.

Related Information

(j) Israeli airworthiness directive 28–05–06–08, dated July 3, 2005, also addresses the subject of this AD.

Material Incorporated by Reference

(k) You must use Gulfstream Alert Service Bulletin 200–28A–261, dated June 7, 2005, to perform the actions that are required by this AD, unless the AD specifies otherwise. The Director of the Federal Register approved the incorporation by reference of this document in accordance with 5 U.S.C. 552(a) and 1 CFR part 51. Contact Gulfstream Aerospace Corporation, P.O. Box 2206, Mail Station D–25, Savannah, Georgia 31402–2206, for a copy of this service information. You may review copies at the Docket Management Facility, U.S. Department of Transportation, 400 Seventh Street SW., Room PL–401, Nassif Building, Washington, DC; on the Internet at *http://dms.dot.gov*; or at the National Archives and Records Administration (NARA).

For information on the availability of this material at the NARA, call (202) 741–6030, or go to *http://www.archives.gov/ federal_register/ code_of_federal_ regulations/ ibr_locations.html.*

Issued in Renton, Washington, on August 4, 2005.

Kevin M. Mullin,

Acting Manager, Transport Airplane Directorate, Aircraft Certification Service.

[FR Doc. 05–16002 Filed 8–12–05; 8:45 am]

BILLING CODE 4910–13–P

DEPARTMENT OF TRANSPORTATION

Federal Aviation Administration

14 CFR Part 39

[Docket No. FAA–2005–22074; Directorate Identifier 2005–NM–152–AD; Amendment 39–14220; AD 2005–16–14]

RIN 2120–AA64

Airworthiness Directives; Gulfstream Model G–IV, GIV–X, GV, and GV–SP Series Airplanes

AGENCY: Federal Aviation Administration (FAA), Department of Transportation (DOT).

ACTION: Final rule; request for comments.

SUMMARY: The FAA is adopting a new airworthiness directive (AD) for all Gulfstream Model G–IV and GV series airplanes, and certain GIV–X and GV–SP series airplanes. This AD requires a one-time inspection to determine if a certain floor heater pad system is installed, and deactivation of the subject floor heater pad system if it is installed. This AD results from an incident of short-circuiting of the floor heater pads, in which no circuit breakers tripped in response to the short-circuiting. We are issuing this AD to prevent short-circuiting of the floor heater pad system, which could result in a fire in the airplane cabin.

DATES: *Effective Date:* August 30, 2005.

The Director of the Federal Register approved the incorporation by reference of certain publications listed in the AD as of August 30, 2005.

We must receive comments on this AD by October 14, 2005.

ADDRESSES: Use one of the following addresses to submit comments on this AD.

- DOT Docket Web site: Go to *http://dms.dot.gov* and follow the instructions for sending your comments electronically.
- Government-wide rulemaking Web site: Go to *http://www.regulations.gov* and follow the instructions for sending your comments electronically.
- Mail: Docket Management Facility; U.S. Department of Transportation, 400 Seventh Street SW., Nassif Building, Room PL–401, Washington, DC 20590.
- Fax: (202) 493–2251.
- Hand Delivery: Room PL–401 on the plaza level of the Nassif Building, 400 Seventh Street SW., Washington, DC, between 9 a.m. and 5 p.m., Monday through Friday, except Federal holidays.

Contact Gulfstream Aerospace Corporation, Technical Publications Dept., P.O. Box 2206, Savannah, Georgia 31402–2206, for service information identified in this AD.

FOR FURTHER INFORMATION CONTACT: Robert Chupka, Aerospace Engineer, Systems and Equipment Branch, ACE–119A, FAA, Atlanta Aircraft Certification Office, One Crown Center, 1895 Phoenix Boulevard, suite 450, Atlanta, Georgia 30349; telephone (770) 703–6070; fax (770) 703–6097.

SUPPLEMENTARY INFORMATION:

Discussion

We have received a report of an incident in which an Adel Wiggins floor heater pad system short-circuited on a Gulfstream GV–SP series airplane. The short-circuit was discovered after an odor of burning was detected emanating from the floor of the cabin. The short-circuit resulted in localized damage to the floorboard and carpet. No circuit breakers tripped as a result of the short-circuiting. This condition, if not corrected, could result in a fire in the airplane cabin.

The subject Adel Wiggins floor heater pad system may also be installed on all Gulfstream Model G–IV and G–V series airplanes and certain Gulfstream Model GIV–X series airplanes. Therefore, those models may be subject to the unsafe condition revealed on certain Model GV–SP series airplanes.

Relevant Service Information

We have reviewed the service information specified in the table below.

RELEVANT GULFSTREAM SERVICE INFORMATION

For Gulfstream model—	Document title	Date
G–IV	Gulfstream G–IV Alert Customer Bulletin 33	June 13, 2005.
GV	Gulfstream GV Alert Customer Bulletin 22	June 13, 2005.
G–IV (G300)	Gulfstream G300 Alert Customer Bulletin 33	June 13, 2005.
GIV–X (G350)	Gulfstream G350 Alert Customer Bulletin 2	June 13, 2005.
G–IV (G400)	Gulfstream G400 Alert Customer Bulletin 33	June 13, 2005.
GIV–X (G450)	Gulfstream G450 Alert Customer Bulletin 2	June 13, 2005.
GV–SP (G500)	Gulfstream G500 Alert Customer Bulletin 3	June 13, 2005.

RELEVANT GULFSTREAM SERVICE INFORMATION—Continued

For Gulfstream model—	Document title	Date
GV–SP (G550)	Gulfstream G550 Alert Customer Bulletin 3	June 13, 2005.

The customer bulletins specified in the table above describe procedures for deactivating the Adel Wiggins floor heater pad system by capping and stowing all associated electrical wiring at each circuit breaker for the floor heater pads, opening and collaring each associated circuit breaker, and labeling each collared circuit breaker inoperative. Accomplishing the actions specified in the service information is intended to adequately address the unsafe condition.

Each customer bulletin specified in the table above refers to Gulfstream Drawing 1159SB50018 as an additional source of service information for deactivating the Adel Wiggins floor heater pad system. This drawing is included as an attachment to each customer bulletin.

FAA's Determination and Requirements of This AD

The unsafe condition described previously is likely to exist or develop on other airplanes of the same type design. Therefore, we are issuing this AD to prevent short-circuiting of the floor heater pad system, which could result in a fire in the airplane cabin. This AD requires inspecting the airplane to determine if an Adel Wiggins floor heater pad system is installed and, if one is installed, accomplishing the actions specified in the service information described previously, except as discussed under ''Differences Between the AD and Service Information.''

We are allowing a special flight permit to be issued to operate the airplane to a location where the requirements of this AD can be accomplished, provided that circuit breakers for the floor heater pad system are pulled and collared.

Differences Between the AD and Service Information

A note under paragraph 1.A., Effectivity, of Gulfstream G–IV Alert Customer Bulletin 33, Gulfstream GV Alert Customer Bulletin 22, Gulfstream G300 Alert Customer Bulletin 33, and Gulfstream G400 Alert Customer Bulletin 33, specifies contacting Gulfstream for assistance if an airplane with the Adel Wiggins floor heater pad system installed is not listed in the effectivity block of the referenced Gulfstream repair drawing. For any airplane that is found to have an Adel Wiggins floor heater pad system installed but that is not listed in the effectivity block of the referenced Gulfstream repair drawing, paragraph (h) of this AD requires deactivating the system in accordance with a method approved by the FAA.

Also, although the Accomplishment Instructions of the referenced customer bulletins describe procedures for reporting compliance with the customer bulletin to Gulfstream, this AD does not require that action.

These differences have been coordinated with the manufacturer.

FAA's Determination of the Effective Date

Since an unsafe condition exists that requires the immediate adoption of this AD, we have found that notice and opportunity for public comment before issuing this AD are impracticable, and that good cause exists to make this AD effective in less than 30 days.

Comments Invited

This AD is a final rule that involves requirements that affect flight safety and was not preceded by notice and an opportunity for public comment; however, we invite you to submit any relevant written data, views, or arguments regarding this AD. Send your comments to an address listed in the **ADDRESSES** section. Include ''Docket No. FAA–2005–22074; Directorate Identifier 2005–NM–152–AD'' at the beginning of your comments. We specifically invite comments on the overall regulatory, economic, environmental, and energy aspects of the AD that might suggest a need to modify it.

We will post all comments we receive, without change, to *http://dms.dot.gov*, including any personal information you provide. We will also post a report summarizing each substantive verbal contact with FAA personnel concerning this AD. Using the search function of that web site, anyone can find and read the comments in any of our dockets, including the name of the individual who sent the comment (or signed the comment on behalf of an association, business, labor union, etc.). You may review the DOT's complete Privacy Act Statement in the **Federal Register** published on April 11, 2000 (65 FR 19477–78), or you may visit *http://dms.dot.gov*.

Examining the Dockets

You may examine the AD docket on the Internet at *http://dms.dot.gov,* or in person at the Docket Management Facility office between 9 a.m. and 5 p.m., Monday through Friday, except Federal holidays. The Docket Management Facility office (telephone (800) 647–5227) is located on the plaza level of the Nassif Building at the DOT street address stated in the **ADDRESSES** section. Comments will be available in the AD docket shortly after the Docket Management System receives them.

Authority for This Rulemaking

Title 49 of the United States Code specifies the FAA's authority to issue rules on aviation safety. Subtitle I, Section 106, describes the authority of the FAA Administrator. Subtitle VII, Aviation Programs, describes in more detail the scope of the Agency's authority.

We are issuing this rulemaking under the authority described in Subtitle VII, Part A, Subpart III, Section 44701, ''General requirements.'' Under that section, Congress charges the FAA with promoting safe flight of civil aircraft in air commerce by prescribing regulations for practices, methods, and procedures the Administrator finds necessary for safety in air commerce. This regulation is within the scope of that authority because it addresses an unsafe condition that is likely to exist or develop on products identified in this rulemaking action.

Regulatory Findings

We have determined that this AD will not have federalism implications under Executive Order 13132. This AD will not have a substantial direct effect on the States, on the relationship between the National Government and the States, or on the distribution of power and responsibilities among the various levels of government.

For the reasons discussed above, I certify that the regulation:

1. Is not a ''significant regulatory action'' under Executive Order 12866;

2. Is not a ''significant rule'' under the DOT Regulatory Policies and Procedures (44 FR 11034, February 26, 1979); and

3. Will not have a significant economic impact, positive or negative, on a substantial number of small entities under the criteria of the Regulatory

Flexibility Act. We prepared a regulatory evaluation of the estimated costs to comply with this AD and placed it in the AD docket. See the **ADDRESSES** section for a location to examine the regulatory evaluation.

List of Subjects in 14 CFR Part 39

Air transportation, Aircraft, Aviation safety, Incorporation by reference, Safety.

Adoption of the Amendment

■ Accordingly, under the authority delegated to me by the Administrator, the FAA amends 14 CFR part 39 as follows:

PART 39—AIRWORTHINESS DIRECTIVES

■ 1. The authority citation for part 39 continues to read as follows:

Authority: 49 U.S.C. 106(g), 40113, 44701.

§ 39.13 [Amended]

■ 2. The Federal Aviation Administration (FAA) amends § 39.13 by adding the following new airworthiness directive (AD):

2005–16–14 Gulfstream Aerospace Corporation: Amendment 39–14220. Docket No. FAA–2005–22074; Directorate Identifier 2005–NM–152–AD.

Effective Date

(a) This AD becomes effective August 30, 2005.

Affected ADs

(b) None.

Applicability

(c) This AD applies to the airplanes identified in Table 1 of this AD, certificated in any category.

TABLE 1.—APPLICABILITY

Gulfstream model/series	Serial Nos.
G–IV	All.
GIV–X	4001 through 4023 inclusive.
GV	All.
GV–SP	5001 through 5075 inclusive.

Unsafe Condition

(d) This AD results from an incident of short-circuiting of the floor heater pads, in which no circuit breakers tripped in response to the short-circuiting. The FAA is issuing this AD to prevent short-circuiting of the floor heater pad system, which could result in a fire in the airplane cabin.

Compliance

(e) You are responsible for having the actions required by this AD performed within the compliance times specified, unless the actions have already been done.

Inspection To Determine If Subject System Installed

(f) Within 25 flight hours or 30 days after the effective date of this AD, whichever is first: Perform an inspection to determine if an Adel Wiggins floor heater pad system is installed. A review of airplane maintenance records is acceptable in lieu of this inspection if the presence of Adel Wiggins floor heater pads can be conclusively determined from that review.

Deactivation of Adel Wiggins Floor Heater Pad System

(g) If an Adel Wiggins floor heater pad system is found during the inspection required by paragraph (f) of this AD: Within 25 flight hours or 30 days after the effective date of this AD, whichever is first, deactivate the Adel Wiggins floor heater pad system in accordance with the Accomplishment Instructions of the applicable customer bulletin identified in Table 2 of this AD, except as provided by paragraph (h) of this AD. Although the customer bulletins referenced in Table 2 of this AD specify to report compliance to the manufacturer, this AD does not require that action.

TABLE 2.—SERVICE INFORMATION

Gulfstream model	Customer bulletin, including Gulfstream drawing 1159SB50018	Date
G–IV	Gulfstream G–IV Alert Customer Bulletin 33	June 13, 2005.
GV	Gulfstream GV Alert Customer Bulletin 22	June 13, 2005.
G–IV (G300)	Gulfstream G300 Alert Customer Bulletin 33	June 13, 2005.
GIV–X (G350)	Gulfstream G350 Alert Customer Bulletin 2	June 13, 2005.
G–IV (G400)	Gulfstream G400 Alert Customer Bulletin 33	June 13, 2005.
GIV–X (G450)	Gulfstream G450 Alert Customer Bulletin 2	June 13, 2005.
GV–SP (G500)	Gulfstream G500 Alert Customer Bulletin 3	June 13, 2005.
GV–SP (G550)	Gulfstream G550 Alert Customer Bulletin 3 June 13, 2005	June 13, 2005.

Airplanes Not Identified in the Gulfstream Repair Drawing

(h) For any airplane that is found to have an Adel Wiggins floor heater pad system installed but that is not listed in the effectivity block of Gulfstream Drawing 1159SB50018: Within 25 flight hours or 30 days after the effective date of this AD, whichever is first, deactivate the Adel Wiggins floor heater pad system in accordance with a method approved by the Manager, Atlanta Aircraft Certification Office (ACO), FAA.

Special Flight Permit

(i) Special flight permits may be issued in accordance with sections 21.197 and 21.199 of the Federal Aviation Regulations (14 CFR 21.197 and 21.199) to operate the airplane to a location where the requirements of this AD can be accomplished, provided that circuit breakers for the floor heater pad system are pulled and collared.

Alternative Methods of Compliance (AMOCs)

(j) The Manager, Atlanta ACO, has the authority to approve AMOCs for this AD, if requested in accordance with the procedures found in 14 CFR 39.19.

Material Incorporated by Reference

(k) You must use the documents specified in Table 3 of this AD to perform the actions that are required by this AD, unless the AD specifies otherwise. The Director of the Federal Register approves the incorporation by reference of these documents in accordance with 5 U.S.C. 552(a) and 1 CFR part 51. To get copies of the service information, contact Gulfstream Aerospace Corporation, Technical Publications Dept., P.O. Box 2206, Savannah, Georgia 31402–2206. To view the AD docket, go to the Docket Management Facility, U.S. Department of Transportation, 400 Seventh Street SW., room PL–401, Nassif Building, Washington, DC. To review copies of the service information, go to the National Archives and Records Administration (NARA). For information on the availability of this material at the NARA, call (202) 741–6030, or go to *http://www.archives.gov/federal-register/cfr/ibr-locations.html.*

TABLE 3.—MATERIAL INCORPORATED BY REFERENCE

Alert customer bulletin, including Gulfstream drawing 1159SB50018	Date
Gulfstream G–IV Alert Customer Bulletin 33.	June 13, 2005.
Gulfstream GV Alert Customer Bulletin 22.	June 13, 2005.
Gulfstream G300 Alert Customer Bulletin 33.	June 13, 2005.
Gulfstream G350 Alert Customer Bulletin 2.	June 13, 2005.

TABLE 3.—MATERIAL INCORPORATED BY REFERENCE—Continued

Alert customer bulletin, including Gulfstream drawing 1159SB50018	Date
Gulfstream G400 Alert Customer Bulletin 33.	June 13, 2005.
Gulfstream G450 Alert Customer Bulletin 2.	June 13, 2005.
Gulfstream G500 Alert Customer Bulletin 3.	June 13, 2005.
Gulfstream G550 Alert Customer Bulletin 3.	June 13, 2005.

Issued in Renton, Washington, on August 4, 2005.

Kevin M. Mullin,

Acting Manager, Transport Airplane Directorate, Aircraft Certification Service.

[FR Doc. 05–16003 Filed 8–12–05; 8:45 am]

BILLING CODE 4910–13–P

DEPARTMENT OF COMMERCE

Office of the Secretary

15 CFR Part 4

[Docket No. 050715188–5188–01]

RIN: 0605–AA20

Disclosure of Government Information; Change in Designated Official

AGENCY: Department of Commerce.

ACTION: Final rule.

SUMMARY: This rule amends the Department of Commerce's (Department) Freedom of Information Act (FOIA) regulations by changing the official authorized to deny requests for records under the Freedom of Information Act, and requests for correction or amendment under the Privacy Act (PA), for the Bureau of the Census.

DATES: Effective August 15, 2005.

FOR FURTHER INFORMATION CONTACT: Rochelle Wilkie Martinez, Acting Chief, Policy Office, U.S. Census Bureau, 301–763–3461.

SUPPLEMENTARY INFORMATION: Appendix B to 15 CFR part 4 designates the officials authorized to deny requests for records under the FOIA, and requests for records and requests for correction or amendment under the PA. In order to change the designated official for the Bureau of the Census, we are amending the regulations.

Classification

It has been determined that this notice is not significant for purposes of E.O. 12866.

It has been determined that this notice does not contain policies with Federalism implications as that term is defined in EO 13132.

Prior notice and an opportunity for public comment are not required by the Administrative Procedure Act for rules concerning agency organization, procedure, or practice (5 U.S.C. 553(b)(A)). The Department finds good cause to waive the 30-day delay in effectiveness because it is unnecessary. This rule merely changes the name of the official who is authorized to deny requests for records under the Freedom of Information Act, and requests for correction or amendment under the Privacy Act. 5 U.S.C. (d)(3).

Because notice and opportunity for comment are not required pursuant to 5 U.S.C. 553 or any other law, the analytical requirements of the Regulatory Flexibility Act (5 U.S.C. 601 *et seq.*) are inapplicable. Therefore, a regulatory flexibility analysis is not required and has not been prepared.

List of Subjects in 15 CFR Part 4

Freedom of information, Privacy.

■ For the reasons above, amend appendix B to 15 CFR part 4 as follows:

PART 4—DISCLOSURE OF GOVERNMENT INFORMATION

■ 1. The authority citation for part 4 continues to read as follows:

Authority: 5 U.S.C. 301; 5 U.S.C. 552; 5 U.S.C. 552a; 5 U.S.C. 553; 31 U.S.C. 3717; 44 U.S.C. 3101; Reorganization Plan No. 5 of 1950.

Appendix B to Part 4—Officials Authorized To Deny Requests for Records Under the Freedom of Information Act, and Requests for Records and Requests for Correction or Amendment Under the Privacy Act

■ 2. In Appendix B to part 4, under the heading ECONOMICS AND STATISTICS ADMINISTRATION, remove ''Bureau of the Census: Chief, Policy Office'' and add in its place ''Bureau of the Census: Manager, Freedom of Information Act''.

Dated: August 9, 2005.

Brenda Dolan,

Departmental Freedom of Information and Privacy Act Officer.

[FR Doc. 05–16093 Filed 8–12–05; 8:45 am]

BILLING CODE 3510–17–P

PENSION BENEFIT GUARANTY CORPORATION

29 CFR Parts 4022 and 4044

Benefits Payable in Terminated Single-Employer Plans; Allocation of Assets in Single-Employer Plans; Interest Assumptions for Valuing and Paying Benefits

AGENCY: Pension Benefit Guaranty Corporation.

ACTION: Final rule.

SUMMARY: The Pension Benefit Guaranty Corporation's regulations on Benefits Payable in Terminated Single-Employer Plans and Allocation of Assets in Single-Employer Plans prescribe interest assumptions for valuing and paying benefits under terminating single-employer plans. This final rule amends the regulations to adopt interest assumptions for plans with valuation dates in September 2005. Interest assumptions are also published on the PBGC's Web site (*http://www.pbgc.gov*).

DATES: Effective September 1, 2005.

FOR FURTHER INFORMATION CONTACT: Catherine B. Klion, Attorney, Legislative and Regulatory Department, Pension Benefit Guaranty Corporation, 1200 K Street, NW., Washington, DC 20005, 202–326–4024. (TTY/TDD users may call the Federal relay service toll-free at 1–800–877–8339 and ask to be connected to 202–326–4024.)

SUPPLEMENTARY INFORMATION: The PBGC's regulations prescribe actuarial assumptions—including interest assumptions—for valuing and paying plan benefits of terminating single-employer plans covered by title IV of the Employee Retirement Income Security Act of 1974. The interest assumptions are intended to reflect current conditions in the financial and annuity markets.

Three sets of interest assumptions are prescribed: (1) A set for the valuation of benefits for allocation purposes under section 4044 (found in Appendix B to Part 4044), (2) a set for the PBGC to use to determine whether a benefit is payable as a lump sum and to determine lump-sum amounts to be paid by the PBGC (found in Appendix B to Part 4022), and (3) a set for private-sector pension practitioners to refer to if they wish to use lump-sum interest rates determined using the PBGC's historical methodology (found in Appendix C to Part 4022).

Accordingly, this amendment (1) adds to Appendix B to Part 4044 the interest assumptions for valuing benefits for allocation purposes in plans with valuation dates during September 2005,

(2) adds to Appendix B to Part 4022 the interest assumptions for the PBGC to use for its own lump-sum payments in plans with valuation dates during September 2005, and (3) adds to Appendix C to Part 4022 the interest assumptions for private-sector pension practitioners to refer to if they wish to use lump-sum interest rates determined using the PBGC's historical methodology for valuation dates during September 2005.

For valuation of benefits for allocation purposes, the interest assumptions that the PBGC will use (set forth in Appendix B to part 4044) will be 3.60 percent for the first 20 years following the valuation date and 4.75 percent thereafter. These interest assumptions represent an increase (from those in effect for August 2005) of 0.20 percent for the first 20 years following the valuation date and are otherwise unchanged.

The interest assumptions that the PBGC will use for its own lump-sum payments (set forth in Appendix B to part 4022) will be 2.50 percent for the period during which a benefit is in pay status and 4.00 percent during any years preceding the benefit's placement in pay status. These interest assumptions represent an increase (from those in effect for August 2005) of 0.25 percent for the period during which a benefit is in pay status and are otherwise unchanged.

For private-sector payments, the interest assumptions (set forth in Appendix C to part 4022) will be the same as those used by the PBGC for determining and paying lump sums (set forth in Appendix B to part 4022).

The PBGC has determined that notice and public comment on this amendment are impracticable and contrary to the public interest. This finding is based on the need to determine and issue new interest assumptions promptly so that the assumptions can reflect, as accurately as possible, current market conditions.

Because of the need to provide immediate guidance for the valuation and payment of benefits in plans with valuation dates during September 2005, the PBGC finds that good cause exists for making the assumptions set forth in this amendment effective less than 30 days after publication.

The PBGC has determined that this action is not a ''significant regulatory action'' under the criteria set forth in Executive Order 12866.

Because no general notice of proposed rulemaking is required for this amendment, the Regulatory Flexibility Act of 1980 does not apply. See 5 U.S.C. 601(2).

List of Subjects

29 CFR Part 4022

Employee benefit plans, Pension insurance, Pensions, Reporting and recordkeeping requirements.

29 CFR Part 4044

Employee benefit plans, Pension insurance, Pensions.

■ In consideration of the foregoing, 29 CFR parts 4022 and 4044 are amended as follows:

PART 4022—BENEFITS PAYABLE IN TERMINATED SINGLE-EMPLOYER PLANS

■ 1. The authority citation for part 4022 continues to read as follows:

Authority: 29 U.S.C. 1302, 1322, 1322b, 1341(c)(3)(D), and 1344.

■ 2. In appendix B to part 4022, Rate Set 143, as set forth below, is added to the table. (The introductory text of the table is omitted.)

Appendix B to Part 4022—Lump Sum Interest Rates for PBGC Payments

* * * * *

Rate set	For plans with a valuation date		Immediate annuity rate (percent)	Deferred annuities (percent)				
	On or after	Before		i_1	i_2	i_3	n_1	n_2
*	*		*	*	*	*		*
143	9–1–05	10–1–05	2.50	4.00	4.00	4.00	7	8

■ 3. In appendix C to part 4022, Rate Set 143, as set forth below, is added to the table. (The introductory text of the table is omitted.)

Appendix C to Part 4022—Lump Sum Interest Rates for Private-Sector Payments

* * * * *

Rate set	For plans with a valuation date		Immediate annuity rate (percent)	Deferred annuities (percent)				
	On or after	Before		i_1	i_2	i_3	n_1	n_2
*	*		*	*	*	*		*
143	9–1–05	10–1–05	2.50	4.00	4.00	4.00	7	8

PART 4044—ALLOCATION OF ASSETS IN SINGLE-EMPLOYER PLANS

■ 4. The authority citation for part 4044 continues to read as follows:

Authority: 29 U.S.C. 1301(a), 1302(b)(3), 1341, 1344, 1362.

■ 5. In appendix B to part 4044, a new entry, as set forth below, is added to the table. (The introductory text of the table is omitted.)

Appendix B to Part 4044—Interest Rates Used to Value Benefits

* * * * *

For valuation dates occurring in the month—	The values of i_t are:					
	i_t	for t =	i_t	for t =	i_t	for t =
* * *	*		*	*		*
September 2005	.0360	1–20	.0475	>20	N/A	N/A

Issued in Washington, DC, on this 8th day of August 2005.

Vincent K. Snowbarger,

Deputy Executive Director, Pension Benefit Guaranty Corporation.

[FR Doc. 05–16097 Filed 8–12–05; 8:45 am]

BILLING CODE 7708–01–P

DEPARTMENT OF COMMERCE

National Oceanic and Atmospheric Administration

50 CFR Part 660

[Docket No. 050426117–5117–01; I.D. 080805A]

Fisheries Off West Coast States and in the Western Pacific; West Coast Salmon Fisheries; Inseason Action #5 – Adjustments of the Recreational Fishery from Cape Alava, Washington, to Cape Falcon, OR

AGENCY: National Marine Fisheries Service (NMFS), National Oceanic and Atmospheric Administration (NOAA), Commerce.

ACTION: Modification of fishing seasons; request for comments.

SUMMARY: NMFS announces two regulatory modifications in the recreational fishery from Cape Alava, WA, to Cape Falcon, OR. Effective Friday, July 29, 2005, the La Push, Westport, and Columbia River Subarea's will be open seven days per week, with a modified daily bag limit as follows: ''All salmon, two fish per day, and all retained coho must have a healed adipose fin clip.'' All other restrictions remain in effect as announced for 2005 Ocean Salmon Fisheries. This action was necessary to conform to the 2005 management goals, and the intended effect is to allow the fishery to operate within the seasons and quotas specified in the 2005 annual management measures.

DATES: Effective 0001 hours local time (l.t.), Friday, July 29, 2005, until the Chinook quota or coho quota are taken, or 2359 hours l.t., September 30, 2005, which ever is earlier; after which the fisheries will remain closed until opened through an additional inseason action for the west coast salmon fisheries, which will be published in the **Federal Register**, or until the effective date of the next scheduled open period announced in the 2005 annual management measures.

Comments will be accepted through August 30, 2005.

ADDRESSES: Comments on these actions must be mailed to D. Robert Lohn, Regional Administrator, Northwest Region, NMFS, NOAA, 7600 Sand Point Way N.E., Bldg. 1, Seattle, WA 98115–0070; or faxed to 206–526–6376; or Rod McInnis, Regional Administrator, Southwest Region, NMFS, NOAA, 501 W. Ocean Blvd., Suite 4200, Long Beach, CA 90802–4132; or faxed to 562–980–4018. Comments can also be submitted via e-mail at the *2005salmonIA5.nwr@noaa.gov* address, or through the internet at the Federal eRulemaking Portal: *http://www.regulations.gov*. Follow the instructions for submitting comments, and include [050426117–5117–01 and/or I.D. 080805A] in the subject line of the message. Information relevant to this document is available for public review during business hours at the Office of the Regional Administrator, Northwest Region, NMFS.

FOR FURTHER INFORMATION CONTACT: Christopher Wright, 206–526–6140.

SUPPLEMENTARY INFORMATION: The NMFS Regional Administrator (RA) has adjusted the recreational fishery from Cape Alava, WA, to Cape Falcon, OR, with two regulatory modifications. Effective Friday, July 29, 2005, the La Push, Westport, and Columbia River Subarea's will be open seven days per week, with a modified daily bag limit as follows: ''All salmon, two fish per day, and all retained coho must have a healed adipose fin clip.'' All other restrictions remain in effect as announced for 2005 Ocean Salmon Fisheries. On July 25, 2005, the Regional Administrator had determined that the catch was less than anticipated preseason and that provisions designed to slow the catch of Chinook could be modified.

All other restrictions remained in effect as announced for 2005 Ocean Salmon Fisheries. These actions were necessary to conform to the 2005 management goals, and the intended effect is to allow the fishery to operate within the seasons and quotas specified in the 2005 annual management measures. Modification in recreational bag limits and recreational fishing days per calendar week is authorized by regulations at 50 CFR 660.409(b)(1)(iii).

In the 2005 annual management measures for ocean salmon fisheries (70 FR 23054, May 4, 2005), NMFS announced the recreational fisheries: the area from the U.S.-Canada Border to Cape Alava, WA (Neah Bay Subarea) opened July 1 through the earlier of September 18 or a 12,667 marked coho subarea quota with a subarea guideline of 4,300 Chinook; the area from Cape Alava to Queets River, WA (La Push Subarea) opened July 1 through the earlier of September 18 or a 3,067 marked coho subarea quota with a subarea guideline of 1,900 Chinook; the area from Queets River to Leadbetter Point, WA (Westport Subarea) opened June 26 through the earlier of September 18 or a 45,066 marked coho subarea quota with a subarea guideline of 28,750 Chinook; the area from Leadbetter Point, WA to Cape Falcon, OR (Columbia River Subarea) opened July 3 through the earlier of September 30 or a 60,900–marked coho subarea quota with a subarea guideline of 8,200 Chinook. The Neah Bay and La Push Subareas were opened Tuesday through Saturday, and the Westport and Columbia River Subareas were opened Sunday through Thursday. All subareas had a provision that there may be a conference call no later than July 27 to consider opening seven days per week. All subareas were restricted to a Chinook minimum size limit of 24 inches (61.0 cm) total length. In addition, all of the subarea bag limits were for all salmon, two fish per day, no more than one of which may be a Chinook, with all retained coho required to have a healed adipose fin clip.

On July 25, 2005, the RA consulted with representatives of the Pacific Fishery Management Council, Washington Department of Fish and Wildlife, and Oregon Department of Fish and Wildlife by conference call. Information related to catch to date, the Chinook and coho catch rates, and effort data indicated that the catch was less than anticipated preseason and that provisions designed to slow the catch of Chinook could be modified, by relaxing the bag limits and fishing days per

calendar provisions. As a result, on July 25, 2005, the states recommended, and the RA concurred, that effective Friday, July 29, 2005, the La Push, Westport, and Columbia River Subarea's be open seven days per week, with a modified daily bag limit as follows: ''All salmon, two fish per day, and all retained coho must have a healed adipose fin clip.'' All other restrictions remain in effect as announced for 2005 Ocean Salmon Fisheries.

The RA determined that the best available information indicated that the catch and effort data, and projections, supported the above inseason actions recommended by the states. The states manage the fisheries in state waters adjacent to the areas of the U.S. exclusive economic zone in accordance with these Federal actions. As provided by the inseason notice procedures of 50 CFR 660.411, actual notice to fishers of the already described regulatory actions were given, prior to the date the action was effective, by telephone hotline number 206–526–6667 and 800–662–9825, and by U.S. Coast Guard Notice to Mariners broadcasts on Channel 16 VHF-FM and 2182 kHz.

These actions do not apply to other fisheries that may be operating in other areas.

Classification

The Assistant Administrator for Fisheries, NOAA (AA), finds that good cause exists for this notification to be issued without affording prior notice and opportunity for public comment under 5 U.S.C. 553(b)(B) because such notification would be impracticable. As previously noted, actual notice of the regulatory actions were provided to fishers through telephone hotline and radio notification. These actions comply with the requirements of the annual management measures for ocean salmon fisheries (70 FR 23054, May 4, 2005), the West Coast Salmon Plan, and regulations implementing the West Coast Salmon Plan 50 CFR 660.409 and 660.411. Prior notice and opportunity for public comment was impracticable because NMFS and the state agencies had insufficient time to provide for prior notice and the opportunity for public comment between the time the fishery catch and effort data were collected to determine the extent of the fisheries, and the time the fishery modifications had to be implemented in order to allow fishers access to the available fish at the time the fish were available. The AA also finds good cause to waive the 30–day delay in effectiveness required under U.S.C. 553(d)(3), as a delay in effectiveness of these actions would limit fishers appropriately controlled access to available fish during the scheduled fishing season by unnecessarily maintaining two restrictions. The actions increased the fishing days per calendar week from 5 days to 7 days, and allowed fishers to land up to two of any species of salmon, previously only one of the two fish bag limit could be a Chinook salmon.

These actions are authorized by 50 CFR 660.409 and 660.411 and are exempt from review under Executive Order 12866.

Authority: 16 U.S.C. 1801 *et seq.*

Dated: August 9, 2005.

Anne M. Lange,

Acting Director, Office of Sustainable Fisheries, National Marine Fisheries Service.

[FR Doc. 05–16118 Filed 8–12–05; 8:45 am]

BILLING CODE 3510–22–S

DEPARTMENT OF COMMERCE

National Oceanic and Atmospheric Administration

50 CFR Part 679

[Docket No. 041126332–5039–02; I.D. 080805D]

Fisheries of the Exclusive Economic Zone Off Alaska; Non-Community Development Quota Pollock with Trawl Gear in the Chinook Salmon Savings Areas of the Bering Sea and Aleutian Islands Management Area

AGENCY: National Marine Fisheries Service (NMFS), National Oceanic and Atmospheric Administration (NOAA), Commerce.

ACTION: Temporary rule; closure.

SUMMARY: NMFS is prohibiting directed fishing for non-Community Development Quota (CDQ) pollock with trawl gear in the Chinook Salmon Savings Areas of the Bering Sea and Aleutian Islands management area (BSAI). This action is necessary to prevent exceeding the 2005 limit of chinook salmon caught by vessels using trawl gear while directed fishing for non-CDQ pollock in the BSAI.

DATES: Effective 12 noon, Alaska local time (A.l.t.), September 1, 2005, through 12 midnight, A.l.t., December 31, 2005.

FOR FURTHER INFORMATION CONTACT: Mary Furuness, 907–586–7228.

SUPPLEMENTARY INFORMATION: NMFS manages the groundfish fishery in the BSAI exclusive economic zone according to the Fishery Management Plan for Groundfish of the Bering Sea and Aleutian Islands Management Area (FMP) prepared by the North Pacific Fishery Management Council under authority of the Magnuson-Stevens Fishery Conservation and Management Act. Regulations governing fishing by U.S. vessels in accordance with the FMP appear at subpart H of 50 CFR part 600 and 50 CFR part 679.

The 2005 chinook salmon PSC limit for the pollock fishery is set at 29,000 fish (see § 679.21(e)(1)(i) and (vii)). Of that limit, 7.5 percent is allocated to the groundfish CDQ program as prohibited species quota reserve (see § 679.21(e)(1)(i)). Consequently, the 2005 non-CDQ limit of chinook salmon caught by vessels using trawl gear while directed fishing for pollock in the BSAI is 26,825 animals.

In accordance with § 679.21(e)(7)(viii), the Administrator, Alaska Region, NMFS (Regional Administrator), has determined that the 2005 non-CDQ limit of chinook salmon caught by vessels using trawl gear while directed fishing for non-CDQ pollock in the BSAI has been reached. Consequently, the Regional Administrator is prohibiting directed fishing for non-CDQ pollock with trawl gear in the Chinook Salmon Savings Areas defined at Figure 8 to 50 CFR part 679.

After the effective date of this closure the maximum retainable amounts at § 679.20(e) and (f) apply at any time during a trip.

Classification

This action responds to the best available information recently obtained from the fishery. The Assistant Administrator for Fisheries, NOAA, (AA), finds good cause to waive the requirement to provide prior notice and opportunity for public comment pursuant to the authority set forth at 5 U.S.C. 553(b)(B) as such a requirement is impracticable and contrary to the public interest. This requirement is impracticable and contrary to the public interest as it would prevent NMFS from responding to the most recent fisheries data in a timely fashion and would delay the closure of directed fishing for non-CDQ pollock with trawl gear in the Chinook Salmon Savings Areas. NMFS was unable to publish a notice providing time for public comment because the most recent, relevant data only became available as of August 3, 2005.

The AA also finds good cause to waive the 30-day delay in the effective date of this action under 5 U.S.C. 553(d)(3). This finding is based upon the reasons provided above for waiver of prior notice and opportunity for public comment.

This action is required by § 679.21 and is exempt from review under Executive Order 12866.

Authority: 16 U.S.C. 1801 *et seq.*

Dated: August 9, 2005.

Anne M. Lange,

Acting Director, Office of Sustainable Fisheries, National Marine Fisheries Service.

[FR Doc. 05–16120 Filed 8–12–05; 8:45 am]

BILLING CODE 3510–22–S

Proposed Rules

Federal Register
Vol. 70, No. 156
Monday, August 15, 2005

This section of the FEDERAL REGISTER contains notices to the public of the proposed issuance of rules and regulations. The purpose of these notices is to give interested persons an opportunity to participate in the rule making prior to the adoption of the final rules.

DEPARTMENT OF AGRICULTURE

Farm Service Agency

7 CFR Part 762

RIN 0560–AH07

Guaranteed Loans—Retaining PLP Status and Payment of Interest Accrued During Bankruptcy and Redemption Rights Periods

AGENCY: Farm Service Agency, USDA.

ACTION: Proposed rule.

SUMMARY: This action proposes several amendments to the regulations governing the Farm Service Agency (FSA) guaranteed farm loan program. First, this rule proposes to allow Preferred Lender Program (PLP) lenders, under certain conditions, to retain their PLP status for a period not to exceed one year after their loss ratio exceeds the standard established by the Agency, currently set at three percent. Secondly, FSA proposes to pay lenders additional interest on a final loss claim if a bankruptcy prevents the lender from taking liquidation action or a state's mandatory redemption law prevents the lender from disposing of property acquired through foreclosure. The changes proposed are intended to improve the services the Agency provides to its customers.

DATES: Comments concerning this proposed rule must be submitted by October 14, 2005 to be assured of consideration.

ADDRESSES: Interested persons are invited to submit written comments concerning this rule. Comments should reference the volume, date and page number of this issue of the **Federal Register**. Comments may be submitted by any of the following methods:

E-Mail: Send comments to *Joseph.Pruss@usda.gov.*

Fax: Submit comments by facsimile transmission to (202) 690–1196.

Mail: Submit comments to Branch Chief, Guaranteed Loan Servicing and Inventory Property Branch, Loan Servicing and Property Management Division, FSA, USDA, 1400 Independence Avenue, STOP 0523, Washington, DC 20250–0523.

Hand Delivery or Courier: USDA FSA DAFLP LSPMD, Suite 500, 1250 Maryland Avenue, SW., Washington, DC 20024.

Federal eRulemaking Portal: Go to *http://www.regulations.gov.* Follow the online instructions for submitting comments.

FOR FURTHER INFORMATION CONTACT: Joseph Pruss, Senior Loan Officer, Farm Service Agency; telephone: (202) 690–2854; Facsimile: (202) 690–1196; E-mail: *Joseph_Pruss@wdc.usda.gov.*

SUPPLEMENTARY INFORMATION:

Discussion of the Proposed Rule

This rule proposes changes to the FSA guaranteed farm loan program. FSA guaranteed loans provide conventional agricultural lenders with up to a 95 percent guarantee of the principal loan amount, and accrued interest. The lender is responsible for servicing a borrower's account for the life of the loan. All loans must meet certain qualifying criteria to be eligible for guarantees, and FSA has the right and responsibility to monitor the lender's servicing activities. Farmers interested in these loans must apply to a conventional lender, which then arranges for the FSA guarantee. When a farmer does not fully repay the loan from the lender that FSA guaranteed, the lender will submit a formal request to the Agency for payment of the guaranteed percentage of the unpaid debt. This rule proposes changes to provisions that govern such loss claims and related loan servicing issues.

Retaining PLP status

The first change proposed is to amend 7 CFR 762.106(g)(2)(ii) regarding the revocation of PLP status for failure to maintain eligibility, specifically with regard to the maximum loss percentage. The status of ''preferred lender'' is awarded by FSA to lenders with demonstrated expertise in agricultural lending and experience with the FSA Guaranteed Loan Program. This section, in part, requires that PLP lenders maintain eligibility established in 7 CFR 762.106(c)(4) governing the losses that a PLP lender may have incurred, currently three percent for loans made in the previous 7 years. The amendment will allow a PLP lender to maintain its status as a PLP lender for up to one year after its loss ratio exceeds, for reasons explained below which are beyond its control, the maximum allowable PLP loss rate. Lenders would be required to explain the reason their loss rate exceeds the allowable limit, and develop and implement a plan to reduce the loss rate below the allowable limit within the one year period. A lender that does not submit such a request to retain their PLP status for the one-year period, will not retain their status as a PLP lender. The proposed waiver will not apply to Certified Lenders, because their loss criteria is already generous compared to the requirements for PLP lenders.

This amendment also would broaden the conditions under which FSA may grant a waiver to existing PLP lenders for exceeding the maximum loss ratio. Present regulations at 7 CFR 762.106(c)(4) provide that the Agency may waive the maximum PLP loss ratio if the applicable lender's loss rate was substantially affected by a disaster (such as storms, earthquakes, drought, flooding, and freezes) as defined in 7 CFR part 1945, subpart A. This provision only covers natural disasters that are widespread enough to be declared a disaster. Conditions, such as a freeze with only local impact, may not be declared a disaster but may cause excessive losses for one or two lenders in a community. Further, lender loss ratios may be affected by an unforeseeable economic downturn, drops in land value, industry moving into or out of an area, a loss of access to a market, biological or chemical damage, or other circumstances beyond the lender's control. Such one-occasion losses may have an inordinate affect on a lender in that local area, or a lender with a concentration of loans to producers of a commodity suffering localized reduction in production and market prices. The proposal would allow the Agency more flexibility in granting a waiver to an existing PLP lender for exceeding the maximum loss ratio for reasons beyond their control. A lender requesting a 1-year waiver of the maximum loss ratio must provide a satisfactory explanation of why it's losses suddenly increased, and a realistic plan detailing the actions they plan to take to reduce their loss ratio to the requisite level. Whether losses could

have been controlled by the lender and whether a plan for loss reduction is acceptable will be determined in each case by FSA. If the Agency grants a 1-year waiver, and the lender's loss ratio does not meet the maximum PLP loss ratio at the end of the 1-year period, the lender's PLP status will be revoked.

Interest Accrual on Loan Liquidations

FSA also proposes to amend the amount of interest accrual that the Agency will pay lenders on loss claims. Specifically, this rule proposes changes to the way loss claims are handled when liquidation is delayed by a Chapter 7 bankruptcy filing, a Chapter 7 bankruptcy results in a lower estimated loss claim due to an over-estimation of security value, or where a mandatory state right of redemption prevents a lender from disposing of property acquired through foreclosure.

Loss claims in case of a Chapter 7 bankruptcy. This rule proposes to amend 7 CFR 762.148(d)(1) to clarify that, in Chapter 7 bankruptcy cases, the date of the decision to liquidate, for the purposes of calculating total interest due on a final loss claim under § 762.149, is the date the borrower files for Chapter 7 bankruptcy. This will preclude any misunderstanding as to the date beyond which the Agency will not pay accruing interest. Currently, 7 CFR 762.148(d)(1) requires the lender with such a borrower who to proceed under section 762.149 and submit a liquidation plan and estimated loss claim within 30 days of the decision to liquidate, if liquidation is expected to exceed 90 days. That policy exists because collateral or property mortgaged for a debt discharged under Chapter 7 of the Bankruptcy Code is subject to repossession or sale by the secured creditor. Thus, a Chapter 7 discharge of an FSA guaranteed farm loan typically results in sale of the security for the guaranteed loan. Although the decision to liquidate is not actually made by the lender, as is commonly the case where defaults cannot be cured and the borrower does not file for bankruptcy, the bankruptcy petition of the borrower is, in effect, a ''decision to liquidate.''

The Agency also is proposing to amend § 762.149 so that in the case of a Chapter 7 bankruptcy, a lender will not be penalized for submitting an estimated loss claim that later proves to be underestimated, based on the final loss claim. The estimated loss claim submitted with the liquidation plan is calculated based on the remaining principal and interest of the loan, less the estimated value of the remaining security for the loan. In a bankruptcy case, lenders often lack reliable information regarding the value of the remaining collateral, their appraisals are outdated, and the bankruptcy schedules may not yet be available for the lenders to use for a liquidation plan and estimated loss claim. Also, when the borrower files bankruptcy the borrower and lender are often in an adverse relationship and the lender cannot inspect or accurately evaluate the security property. Other problems may cause the estimated claim in a Chapter 7 case to vary from the final claim, such as depreciation, missing security property, or an inaccurate estimate of the time required to complete liquidation. Thus, at the time of the bankruptcy filing and submission of the estimated loss claim, the lender's valuation of its remaining loan security may be far from what the liquidation sale actually brings. Regardless, for purposes of calculating final loss claims, present Agency regulations allow no further interest on the loan after payment of the estimated loss claim. Therefore, this rule proposes that 7 CFR 762.149(d)(2) be amended to provide that a lender receive the guaranteed percentage of the interest that accrued on the amount that had been estimated to be secure, but upon final disposition of collateral was found to be unsecured. Interest will not be paid on the amount estimated to be unsecured, and will not be paid if the lender did not submit an estimated loss claim within the established timeframe. The Agency proposes to pay the additional interest up to a maximum of 45 days after the earlier of the relief from stay, or discharge of the Chapter 7 Bankruptcy. This is a reasonable period of time for a lender to accomplish liquidation after the relief from stay or discharge.

Redemption rights. This rule proposes that lenders will be paid the guaranteed portion of interest that accrues during a redemption period on the additional unsecured debt if the lender submitted an estimated loss claim as required. State right of redemption statutes provide the former owner of the property, and, in some states, parties with any interest in the property such as subordinate lien holders, with a time period, typically six months to one year, during which they may redeem the property by paying the obligations secured by it. Numerous states provide that redemption rights continue after foreclosure proceedings. Therefore, these rights may frustrate creditors, including FSA guaranteed lenders, when they are attempting to enforce their liens on mortgaged property. A creditor who submits successful bids at foreclosure sales cannot get a clear deed to the property until the debtor's redemption period has passed. Such lenders cannot convey clear title to a buyer, and if they do sell it, the final sales price could be depressed because of the uncertainty of the finality of the transaction. Further, any successful bidder at a foreclosure sale in a state with a redemption period cannot take title to the property until the end of the redemption period. A winning bidder who improves the property, such as erecting buildings or fences, risks losing his or her investment if the former owner ''redeems'' it and retains title by paying the redemption amount. This discourages bidding on property and may reduce the amount potential purchasers are willing to bid. For this reason, lenders rarely sell properties prior to the expiration of the redemption period. Many factors beyond the lender's control, such as actions of the former owner, economic conditions, and even the weather may affect the real estate value during the redemption period. Currently, FSA loss claim regulation, 7 CFR 762.149, prohibits paying the lender interest that accrues beyond 90 days from the date of the decision to liquidate. However, borrower redemption rights are circumstances beyond the lender's control, and the Agency has determined that the lender is entitled to the guaranteed portion of the interest that accrues during the redemption period on the additional portion of the loan that is unsecured. The Agency is proposing to pay the additional interest during the time of the redemption period, plus up to an additional 45 days, which is considered sufficient time for the lender to dispose of the property.

There will be some additional cost to the Agency for the above proposed changes, but based on an analysis of losses paid during fiscal years 2002 through 2004, the total costs to the Agency should be minimal. The analysis indicated that the proposals will result in an increase of only one-sixth of one percent of the amount currently paid in loss claims.

Executive Order 12866

This rule has been determined not significant and was not reviewed by the Office of Management and Budget under Executive Order 12866.

Regulatory Flexibility Act

The Agency certifies that this rule will not have a significant economic effect on a substantial number of small entities. This rule does not require any specific actions on the part of the subject program's borrowers or lenders, except for a PLP lender that is

requesting the Agency to grant an exception to the loss rate criteria, to allow them to retain their PLP status for a year while they attempt to reduce their loss ratio to an acceptable level. In the six year period since the Agency has been granting PLP status, an average of less than one lender a year has had their status removed due to their loss ratio exceeding the established standard. When a PLP lender decides to request that their PLP status be maintained for an additional year, the Agency anticipates that request will require minimal submission of information, no more than a page or two of narrative explaining why their loss rate is high, and their plans to bring it down, further justifying the conclusion that a Regulatory Flexibility Analysis is not required. The Agency, therefore, concludes that it is not required to perform a Regulatory Flexibility Analysis as required by the Regulatory Flexibility Act, Public Law 96–534, as amended (5 U.S.C. 601).

Environmental Evaluation

The environmental impacts of this proposed rule have been considered in accordance with the provisions of the National Environmental Policy Act of 1969 (NEPA), 42 U.S.C. 4321 *et seq.,* the regulations of the Council on Environmental Quality (40 CFR Parts 1500–1508), and the FSA regulation for compliance with NEPA, 7 CFR part 1940, subpart G. FSA completed an environmental evaluation and concluded that the rule requires no further environmental review. No extraordinary circumstances or other unforeseeable factors exist which would require preparation of an environmental assessment or environmental impact statement.

Executive Order 12988

This rule has been reviewed in accordance with E.O. 12988, Civil Justice Reform. In accordance with that Executive Order: (1) All State and local laws and regulations that are in conflict with this rule will be preempted; (2) no retroactive effect will be given to this rule except that lender servicing under this rule will apply to loans guaranteed prior to the effective date of the rule to the extent permitted by existing contracts; and (3) administrative proceedings in accordance with 7 CFR part 11 must be exhausted before requesting judicial review.

Executive Order 12372

For reasons contained in the Notice related to 7 CFR part 3015, subpart V (48 FR 29115, June 24, 1983), the programs and activities within this rule are excluded from the scope of Executive Order 12372, which requires intergovernmental consultation with state and local officials.

Unfunded Mandates

This rule contains no Federal mandates, as defined by title II of Unfunded Mandates Reform Act of 1995 (UMRA), Public Law 104–4, for State, local, and tribal governments or the private sector. Therefore, this rule is not subject to the requirements of sections 202 and 205 of UMRA.

Executive Order 13132

The policies contained in this rule do not have any substantial direct effect on states, on the relationship between the national government and the states, or on the distribution of power and responsibilities among the various levels of government. Nor does this rule impose substantial direct compliance costs on state and local governments. Therefore, consultation with the states is not required.

Paperwork Reduction Act

The amendments to 7 CFR part 762 contained in this rule require no revisions to the information collection requirements that were previously approved by OMB under control number 0560–0155.

Federal Assistance Programs

These changes affect the following FSA programs as listed in the Catalog of Federal Domestic Assistance:

10.406—Farm Operating Loans.
10.407—Farm Ownership Loans.

List of Subjects in 7 CFR Part 762

Agriculture, Banks, Credit, Loan programs—agriculture.

Accordingly, 7 CFR part 762 is proposed to be amended as follows:

PART 762—GUARANTEED FARM LOANS

1. The authority citation for part 762 continues to read as follows:

Authority: 5 U.S.C. 301; 7 U.S.C. 1989.

2. Amend § 762.106 by revising paragraph (g)(2)(ii) to read as follows:

§ 762.106 Preferred and certified lender programs.

* * * * *

(g) * * *

(2) * * *

(ii) Failure to maintain PLP or CLP eligibility criteria. The Agency, however, may allow a PLP lender with a loss rate which exceeds the maximum PLP loss rate, as provided by the Agency periodically in a **Federal Register** notice, to retain its PLP status if:

(A) The Agency determines that exceeding the maximum PLP loss rate standard was beyond the control of the lender (Examples include, but are not limited to, a freeze with only local impact, economic downturn in a local area, drop in local land values, industries moving into or out of an area, loss of access to a market, and biological or chemical damage);

(B) The lender documents in writing why the excessive loss rate is beyond their control; and

(C) The lender provides a written plan that will reduce the loss rate to the PLP maximum rate within one year from the date of the plan. PLP status will be revoked if the maximum PLP loss rate is not met at the end of the one year grace period.

* * * * *

3. Amend § 762.148(d)(1) by adding a sentence to the end of the paragraph to read as follows:

§ 762.148 Bankruptcy.

* * * * *

(d) * * *

(1) * * * For purposes of calculating the time frames required under § 762.149 of this part, the date the borrower files for bankruptcy protection under Chapter 7 shall be the date of the decision to liquidate.

* * * * *

4. Amend § 762.149 by revising paragraph (d)(2) to read as follows:

§ 762.149 Liquidation.

* * * * *

(d) * * *

(2) The lender generally will discontinue interest accrual on the defaulted loan at the time the estimated loss claim is paid by the Agency. If the lender estimates that there will be no loss after considering the costs of liquidation, interest accrual will cease 90 days after the decision to liquidate. However, in the case of a Chapter 7 bankruptcy, the Agency will pay the lender interest which accrues during and up to 45 days after the date of discharge on the portion of the debt that was estimated to be secured but was found to be unsecured upon final disposition, in cases where the lender filed an estimated loss claim. The Agency also will pay the lender interest which accrues during and up to 45 days after the time period the lender is unable to dispose of acquired property due to state imposed redemption rights on any unsecured portion of the loan during the redemption period, if an estimated loss claim was timely filed during the liquidation action.

* * * * *

Signed at Washington, DC, on July 22, 2005.

James R. Little,

Administrator, Farm Service Agency.

[FR Doc. 05–16107 Filed 8–12–05; 8:45 am]

BILLING CODE 3410–05–P

FEDERAL TRADE COMMISSION

16 CFR Part 803

Premerger Notification; Reporting and Waiting Period Requirements

AGENCY: Federal Trade Commission.

ACTION: Notice of proposed rulemaking.

SUMMARY: The Commission is proposing amendments to the premerger notification rules (''the rules'') to enable filing parties to provide Internet links to certain documents in lieu of paper copies, and to address ''stale filing'' situations, in which parties make premerger notification filings but then fail to comply with a Request for Additional Information and Documentary Material (''second request''). Section 7A of the Clayton Act (''the Act'') requires the parties to certain mergers and acquisitions to file notification with the Federal Trade Commission (''the Commission'' or ''FTC'') and the Assistant Attorney General in charge of the Antitrust Division of the Department of Justice (''the Assistant Attorney General'' or ''DOJ'') and to wait a specified period of time before consummating such transactions. The reporting and waiting period requirements are intended to enable these enforcement agencies to determine whether a proposed merger or acquisition may violate the antitrust laws if consummated and, when appropriate, to seek a preliminary injunction in Federal court to prevent consummation. If either agency determines during the waiting period that further inquiry is necessary, it can issue a second request, which extends the waiting period for a specified period after all parties have complied with the request (or, in the case of a tender offer or a bankruptcy sale, after the acquiring person complies). The Commission is proposing a change to relieve the burden of complying with Items 4(a) and (b) of the Notification and Report Form (''the Form''). Currently, paper copies of annual reports, annual audit reports and regularly prepared balance sheets and copies of certain documents, such as 10Ks filed with the Securities and Exchange Commission (''SEC''), must be provided in response to these Items. The proposed modification would allow filing persons to provide an Internet address linking directly to the documents required by Items 4(a) and (b) in lieu of providing paper copies. The Commission is also proposing an amendment to the rules to specify that an acquiring person's notification, and an acquired person's notification in certain types of transactions, shall expire after eighteen months if a second request to them remains outstanding.

DATES: Comments must be received on or before October 14, 2005.

ADDRESSES: Interested parties are invited to submit written comments. Comments should refer to ''HSR Proposed Rulemaking, Project No. P989316,'' to facilitate the organization of comments. A comment filed in paper form should include this reference both in the text and on the envelope, and should be mailed or delivered, with two complete copies, to the following address: Federal Trade Commission/ Office of the Secretary, Room 135–H, 600 Pennsylvania Avenue, NW., Washington, DC 20580. Because paper mail in the Washington area and at the Agency is subject to delay, please consider submitting your comments in electronic form, as prescribed below. Comments containing confidential material, however, must be filed in paper form, must be clearly labeled ''Confidential,'' and must comply with Commission Rule 4.9(c).[1] The FTC is requesting that any comment filed in paper form be sent by courier or overnight service, if possible.

Comments filed in electronic form should be submitted by clicking on the following Weblink: *https://secure.commentworks.com/ftc-hsrexpirationofnotification* and following the instructions on the Web-based form. To ensure that the Commission considers an electronic comment, you must file it on the Web-based form at the *https://secure.commentworks.com/ftc-hsrexpirationofnotification* Weblink. You also may visit *http://www.regulations.gov* to read this request for comment, and may file an electronic comment through that Web site. The Commission will consider all comments that regulations.gov forwards to it.

The FTC Act and other laws the Commission administers permit the collection of public comments to consider and use in this proceeding as appropriate. All timely and responsive public comments, whether filed in paper or electronic form, will be considered by the Commission, and will be available to the public on the FTC Web site, to the extent practicable, at *http://www.ftc.gov.* As a matter of discretion, the FTC makes every effort to remove home contact information for individuals from the public comments it receives before placing those comments on the FTC Web site. More information, including routine uses permitted by the Privacy Act, may be found in the FTC's privacy policy, at *http://www.ftc.gov/ftc/privacy.htm.*

FOR FURTHER INFORMATION CONTACT: Marian R. Bruno, Assistant Director, or B. Michael Verne, Compliance Specialist, Premerger Notification Office, Bureau of Competition, Room 303, Federal Trade Commission, Washington, DC 20580. Telephone: (202) 326–3100.

SUPPLEMENTARY INFORMATION:

Section 803.2 Instructions Applicable to Notification and Report Form

In response to Items 4(a) and (b) of the Form, filing parties currently must provide paper copies of annual reports, annual audit reports and regularly prepared balance sheets and copies of certain documents, such as 10K's, filed with the SEC. Many of these documents are routinely submitted in electronic form to the SEC and are available on the SEC's Electronic Data Gathering, Analysis, and Retrieval (''EDGAR'') system, or via the Internet on company Web sites. Responses to these Items may often be voluminous and can account for the bulk of documents submitted with the Form.

In view of the ease with which the antitrust agencies can access these documents via the Internet, the proposed modification of paragraph 803.2(e) and Instructions to the Form would allow filing parties to provide an Internet address linking directly to the documents required by Items 4(a) and 4(b) in lieu of providing paper copies. Incorporating documents by reference to Internet Web pages would only apply to Items 4(a) and 4(b) and would not be available for responding to other items on the Form.

It would remain the filer's duty to ensure that the filing is accurate and complete, as attested by the filer's certification signature. Accordingly, it is proposed that Section 803.2 be further amended to provide that if an Internet link submitted is, or becomes, inoperative or the document that is linked to is incomplete, such that the

[1] The comment must be accompanied by an explicit request for confidential treatment, including the factual and legal basis for the request, and must identify the specific portions of the comment to be withheld from the public record. The request will be granted or denied by the Commission's General Counsel, consistent with applicable law and the public interest. *See* Commission Rule 4.9(c), 16 CFR 4.9(c).

documents required by Items 4(a) or 4(b) are not available for review by the FTC and DOJ, the filer shall make the document(s) available by referencing operative Internet link(s) or provide paper copies of the relevant document(s) by 5 p.m. on the business day following any request by the FTC or the Assistant Attorney General. Failure to provide requested documents by the close of the next business day would result in notice of a deficient filing under Section 803.10(c)(2). Given the ability to incorporate such documents by linking, the previous option to cite the date and place of filing if copies are not readily available would no longer be necessary, and it is proposed that it be deleted from the Instructions.

Section 803.7 Expiration of Notification

The Commission and the DOJ have encountered instances in which, after parties make premerger notification filings and after second requests are issued, the parties make no effort to comply with the second requests. Generally this occurs when the parties have decided not to go forward with the proposed acquisition, either because of the issuance of second requests or for business reasons unrelated to the government's antitrust investigation. In nearly all of these instances, the parties have voluntarily withdrawn their premerger notification filings. The agency is then able to close its investigation, as there no longer is a transaction pending with a waiting period.

In some instances, however, the parties have refused to withdraw their notification even though they lack a present intention to undertake the acquisition. In such instances, the agency's investigation remains open indefinitely because the waiting period is suspended, and would only begin to run for the final 30 days if and when there was compliance with the second requests.

The information contained in the parties' notifications becomes stale with the passage of time. In order to conduct the meaningful review contemplated by the Act, the agencies require information pertaining to the competitive implications of transactions. Indeed, since the rules' inception in 1978, Section 803.7 of the Rules has provided that notification with respect to an acquisition shall expire one year following expiration of the waiting period. As the Statement of Basis and Purpose (''SBP'') states, ''If the acquisition is to be consummated after that time, the possibility of changed circumstances warrants a fresh review by the enforcement agencies.''43 FR 33450 , 33512 (July 31, 1978). Fresh review of a proposed acquisition cannot be assured when the information contained in the parties' notification has become outdated. Further, both Section 803.7 and the requirement in Section 803.5 of an affidavit attesting to a good faith intention to make the acquisition are intended in part to ensure that the parties intend to consummate the acquisition, so that the agencies are not forced to waste resources investigating hypothetical transactions. *See* 43 FR 33450, 33510–12 (July 31, 1978).

Parties should already be on notice, by virtue of Section 803.21, that they cannot toll their HSR waiting period indefinitely by failing to comply with a second request. Section 803.21 requires that all additional information or documentary material sought via a second request (or partial submission accompanied by a Section 803.3 statement of reasons for noncompliance) ''be supplied within a reasonable time.'' Although the SBP accompanying the promulgation of Section 803.21 states that the rule was ''designed primarily to prevent an acquired person in a transaction subject to Section 801.30 from frustrating the acquisition[,]'' [2] the wording of the rule itself is not limited to certain types of transactions or persons.

While Section 803.21 requires compliance with all second requests ''within a reasonable time[,]'' it does not define ''a reasonable time'' and does not expressly provide the consequences for noncompliance. The Commission believes that there would come a point when the agency would have sound legal basis under Section 803.21 for disregarding, rejecting or deeming withdrawn or expired a notification where the party had failed to comply with a second request.

The Commission believes, however, that it is preferable and would improve the certainty of the premerger notification process to clearly identify the specific time at which an acquiring person's Notification (or an acquired person's notification in a non-Section 801.30 transaction) will expire when a second request remains outstanding to that person. The Commission proposes that such date be 18 months from the date of the initial notification (which typically would be approximately 17 months from the issuance of the second request). We are not aware of second request compliance ever having taken that long. Even in instances where the parties may have reason to delay their second request response for some period of time,[3] eighteen months should provide them ample time. Beyond that time, the Commission believes that a more up-to-date Notification should be provided, triggering a new waiting period.

The Commission proposes specifying this 18-month requirement in Section 803.7, entitled ''Expiration of Notification''. Section 803.7 would be split into two parts: one (the current provision) addressing expiration of notification when the waiting period has expired; the other (new language) addressing expiration of the waiting period due to failure to comply with a second request. The current text of Section 803.7 would thus be redesignated ''*(a) Waiting period expired.*'' A new paragraph (b) would be added, along with a new example:

(b) *Failure to comply with request for additional information.* An acquiring person's notification and, in the case of an acquisition to which section 801.30 does not apply, an acquired person's notification shall expire eighteen months following the date of receipt of such person's notification if a request for additional information or documentary material remains outstanding to such person (or entities included therein, officers, directors, partners, agents or employees thereof), without a certification as required by section 803.6(b), on such date. If either person's notification expires pursuant to this paragraph, both parties must file a new notification and observe the waiting period in order to carry out the transaction.

Example: A files notification on January 15 of Year 1 to acquire voting securities of B. On February 15 of Year 1, prior to expiration of the waiting period, requests for additional information or documentary material are

[2] 43 FR 33450, 33516 (July 31, 1978). The SBP goes on to state that absent Section 803.21, ''an uncooperative acquired person could delay the expiration of the waiting period indefinitely by not responding'' to a second request. Section 801.30 transactions are essentially non-consensual transactions, including tender offers, purchases from third parties, and open market purchases. While the Act addresses this problem in the context of tender offers by providing that a second request to an acquired person in a tender offer does not extend the waiting period, the problem existed for other types of non-consensual, Section 801.30 transactions without Section 803.21. ''Rather than extend [tender offer] treatment to all other Section 801.30 transactions, the Commission opted to impose a general obligation on all recipients to respond within a reasonable time.'' *Id.*

[3] For example, the transaction may be subject to approval by a regulatory agency, which might take longer than HSR review. In that situation, the parties may not want their notification to expire before the expected regulatory agency approval is received. In such an extreme instance, the parties could also help themselves by delaying making their HSR filings to coincide more closely with the regulatory agency approval.

issued to A and B. Before A supplies the information and documentary material requested, business conditions change and A and B decide not to go forward with the transaction. A does not withdraw its filing and takes the position that it will comply with the request for additional information and documentary material if and when the proposed transaction is ever revived. A's notification expires July 15 of Year 2, eighteen months following the date of receipt of its notification. If A and B wish to revive their transaction, both parties must file a new notification and observe the waiting period in order to carry out the transaction.

The Commission is proposing the modification to Section 803.7 rather than Section 803.21 because the ''stale filings'' situations that the agencies have encountered are separate and distinct from the problem, addressed by the ''reasonable time'' requirement of Section 803.21, of an acquired person in a Section 801.30 transaction trying to frustrate the acquisition. Indeed, the proposed rule is drafted to exclude acquired persons in Section 801.30 transactions so as not to recreate the problem that Section 803.21 was designed to address. The new rule also fits well within the caption of Section 803.7, because it deals with expiration of notification.

The Commission anticipates that if the proposed new rule is adopted, it will apply upon its adoption to pending transactions. Thus, for example, if there are any pending transactions in which the acquiring person (or the acquired person in a non-Section 801.30 transaction) has failed to comply with a second request within 18 months of that person's notification, that notification will expire upon adoption of the rule.

Request for Public Comment

All comments should be filed as prescribed in the **ADDRESSES** section above, and must be received on or before October 14, 2005.

Communications by Outside Parties to Commissioners and Their Advisors

Written communications and summaries or transcripts of oral communications respecting the merits of this proceeding from any outside party to any Commissioner or Commissioner's advisor will be placed on the public record. 16 CFR 1.26(b)(5).

Regulatory Flexibility Act

The Regulatory Flexibility Act, 5 U.S.C. 601–612, requires that the agency conduct an initial and final regulatory analysis of the anticipated economic impact of the proposed amendments on small businesses, except where the Commission certifies that the regulatory action will not have a significant economic impact on a substantial number of small entities. 5 U.S.C. 605.

Because of the size of the transactions necessary to invoke a Hart-Scott-Rodino filing, the premerger notification rules rarely, if ever, affect small businesses. Indeed, the 2000 amendments to the Act were intended to reduce the burden of the premerger notification program by exempting all transactions valued at $50 million or less[4]. Further, none of the proposed rule amendments expands the coverage of the premerger notification rules in a way that would affect small business. Accordingly, the Commission certifies that these proposed rules will not have a significant economic impact on a substantial number of small entities. This document serves as the required notice of this certification to the Small Business Administration.

Paperwork Reduction Act

The Paperwork Reduction Act, 44 U.S.C. 3501–3518, requires agencies to submit ''collections of information'' to the Office of Management and Budget (''OMB'') and obtain clearance before instituting them. Such collections of information include reporting, recordkeeping, or disclosure requirements contained in regulations. The information collection requirements in the HSR rules and Form have been reviewed and approved by OMB under OMB Control No. 3084–0005. The current clearance expires on May 31, 2007.

The Commission's proposed revisions to the Form and rules do not ''substantive [ly] or material[ly] modify'' the existing terms of the currently approved collection of information (OMB Control Number 3084–0005) to necessitate OMB's further review and approval. *See* 44 U.S.C. 3507(h)(3); 5 CFR 1320.5(g). It is highly unlikely that a Notification which expires under the proposed rule change would need to be re-filed by the parties because the rule changes are intended to apply to situations in which the parties have already abandoned the transaction.

List of Subjects in 16 CFR Part 803

Antitrust.

For the reasons stated in the preamble, the Federal Trade Commission proposes to amend 16 CFR part 803 as set forth below:

PART 803—TRANSMITTAL RULES

1. The authority citation for part 803 continues to read as follows:

Authority: 15 U.S.C. 18a(d).

[4] That figure is now $53.1 million, adjusted for the change in the Gross Domestic Product, and will be adjusted annually.

2. Amend § 803.2 by revising paragraph (e) to read as follows:

§ 803.2 Instructions applicable to Notification and Report Form.

* * * * *

(e) A person filing notification may incorporate by reference:

(1) To a previous filing, only documentary materials required to be filed in response to items 4(a) and 4(b) of the Notification and Report Form, which were previously filed by the same person and which are the most recent versions available; except that when the same parties file for a higher threshold no more than 90 days after having made filings with respect to a lower threshold, each party may incorporate by reference in the subsequent filing any documents or information in its earlier filing provided that the documents and information are the most recent available;

(2) To an Internet address directly linking to the document, only documents required to be filed in response to item 4(a) of the Notification and Report Form and in response to item 4(b). If an Internet address is inoperative or becomes inoperative during the waiting period, or the document that is linked to is incomplete, upon notification by the Commission or Assistant Attorney General, the parties must make these documents available to the agencies by either referencing an operative Internet address or by providing paper copies to the agencies as provided in § 803.10(c)(1) by 5 p.m. on the next regular business day. Failure to make the documents available, by the Internet or by providing paper copies, by 5 p.m. on the next regular business day will result in notice of a deficient filing pursuant to § 803.10(c)(2).

3. Revise § 803.7 to read as follows:

§ 803.7 Expiration of notification.

(a) *Waiting period expired.* Notification with respect to an acquisition shall expire 1 year following the expiration of the waiting period. If the acquiring person's holdings do not, within such time period, meet or exceed the notification threshold with respect to which the notification was filed, the requirements of the act must thereafter be observed with respect to any notification threshold not met or exceeded.

Example: ''A'' files notification that in excess of $100 million (as adjusted) of the voting securities of corporation B are to be acquired. One year after the expiration of the waiting period, ''A'' has acquired less than $100 million (as adjusted) of B's voting securities. Although § 802.21 will permit ''A''

to purchase any amount of B's voting securities short of $100 million (as adjusted) within 5 years from the expiration of the waiting period, A's holdings may not meet or exceed the $100 million (as adjusted) notification threshold without ''A'' and ''B'' again filing notification and observing a waiting period.

(b) *Failure to comply with request for additional information.* An acquiring person's notification and, in the case of an acquisition to which § 801.30 does not apply, an acquired person's notification shall expire eighteen months following the date of receipt of such person's notification if a request for additional information or documentary material remains outstanding to such person (or entities included therein, officers, directors, partners, agents or employees thereof), without a certification as required by § 803.6(b), on such date. If either person's notification expires pursuant to this paragraph, both parties must file a new notification in order to carry out the transaction.

Example: A files notification on January 15 of Year 1 to acquire voting securities of B. On February 15 of Year 1, prior to expiration of the waiting period, requests for additional information or documentary material are issued to A and B. Before A supplies the information and documentary material requested, business conditions change, and A and B decide not to go forward with the transaction. A does not withdraw its filing and takes the position that it will comply with the request for additional information and documentary material if and when the proposed transaction is ever revived. A's notification expires July 15 of Year 2, eighteen months following the date of receipt of its notification. If A and B wish to revive their transaction, both parties must file a new notification and observe the waiting period in order to carry out the transaction.

4. Revise page IV of the Instructions in the Appendix to part 803 to read as follows:

Appendix to Part 803

* * * * *

BILLING CODE 6750–01–P

Item 3(c)(i)-List each class of voting securities (including convertible voting securities) which will be outstanding after the acquisition has been completed. If there is more than one class of voting securities, include a description of the voting rights of each class. Also list each class of non-voting securities which will be acquired in the acquisition;

Item 3(c)(ii)-Total number of shares of each class of securities listed which will be outstanding after the acquisition has been completed;

Item 3(c)(iii)-Total number of shares of each class of securities listed which will be acquired in this acquisition. If there is more than one acquiring person for any class of securities, show data separately for each acquiring person;

Item 3(c)(iv)-Identity of each person acquiring any securities of any class listed. If there is more than one acquiring person for any class of securities, show data separately for each acquiring person;

Item 3(c)(v)-Dollar value of securities of each class listed to be acquired in this transaction (see § 801.10). If there is more than one acquiring person of any class of securities, show data separately for each acquiring person (If the exact dollar value cannot be determined at the time of filing, provide an estimated value and indicate the basis on which the estimate was made);

Item 3(c)(vi)-Total number of each class of securities listed which will be held by acquiring person(s) after the acquisition has been accomplished. If there is more than one acquiring person for any class of securities, show data separately for each acquiring person;

Item 3(d)-Furnish copies of final or most recent versions of all documents which constitute the agreement among the acquiring person(s) and the person(s) whose voting securities or assets are to be acquired. (Do not attach these documents to the Answer Sheets.)

ITEM 4

Furnish one copy of each of the following documents. For each entity included within the person filing notification which has prepared its own such documents different from those prepared by the person filing notification, furnish, in addition, one copy of each document from each such other entity. Furnish copies of:

Item 4(a)-all of the following documents which have been filed with the United States Securities and Exchange Commission (or are to be filed contemporaneously in connection with this acquisition); the most recent proxy statement and Form 10-K, each dated not more than three years prior to the date of this Notification and Report Form; all Forms 10-Q and 8-K filed since the end of the period reflected by the Form 10-K being supplied; any registration statement filed in connection with the transaction for which notification is being filed; if the acquisition is a tender offer, Schedule TO. Alternatively, the person filing notification may incorporate a document by reference to an internet address directly linking to the documents (see § 803.2(e)(2));

NOTE: In response to Item 4(a), the person filing notification may incorporate by reference documents submitted with an earlier filing as explained in the staff formal interpretations dated April 10, 1979, and April 7, 1981, and in § 803.2(e).

Item 4(b)-the most recent annual reports and most recent annual audit reports (of person filing notification and of each unconsolidated United States issuer included within such person) and, if different, the most recently regularly prepared balance sheet of the person filing notification and of each unconsolidated United States issuer included within such person. The person filing notification may incorporate a document by reference to an internet address directly linking to the documents (see § 803.2(e)(2));

Item 4(c)-all studies, surveys, analyses and reports which were prepared by or for any officer(s) or director(s) (or, in the case of unincorporated entities, individuals exercising similar functions) for the purpose of evaluating or analyzing the acquisition with respect to market shares, competition, competitors, markets, potential for sales growth or expansion into product or geographic markets, and indicate (if not contained in the document itself) the date of preparation, and the name and title of each individual who prepared each such document.

Persons filing notification may provide an optional index of documents called for by Item 4 of the Answer Sheets.

NOTE: If the person filing notification withholds any documents called for by Item 4(c) based on a claim of privilege, the person must provide a statement of reasons for such noncompliance as specified in the staff formal interpretation dated September 13, 1979, and § 803.3(d).

ITEMS 5 through 8

NOTE: For Items 5 through 8, the acquired person should limit its response in the case of an acquisition of assets, to the assets to be sold, in the case of an acquisition of non-corporate interests, to the unincorporated entity being acquired, and in the case of an acquisition of voting securities, to the issuer(s) whose voting securities are being acquired and all entities controlled by such issuer. A person filing as both acquiring and acquired may be required to provide a separate response to these items in each capacity so that it can properly limit its response as an acquired person. (See § 803.2(b) and (c).)

Items 5(a)-5(c): These items request information regarding dollar revenues and lines of commerce at three NAICS levels with respect to operations conducted within the United States. (See § 803.2(c)(1).) All persons must submit certain data at the 6-digit NAICS industry code level. To the extent that dollar revenues are derived from manufacturing operations (NAICS Sectors 31-33), data must also be submitted at the 7-digit product class level and 10-digit product code level (NAICS-based codes). Where certain published NAICS industry codes contain only 5 digits, the filing person should add a zero (0) after the fifth (5th) digit.

NOTE: See "References" listed in the General Instructions to the Form. Refer to the *1997 NAICS Manual* for the 6-digit industry codes and the *1997 Numerical List of Manufactured and Mineral Products (1997 Numerical List)* for the 7-digit product classes and 10-digit product codes. Report revenues for the 7-digit NAICS product classes and 10-digit NAICS product codes using the codes in the columns labeled "Product code" in the *1997 Numerical List.*

Nondepository credit intermediation (NAICS Industry Group Code 5222); securities, commodity contracts, and other financial investments (NAICS Subsector 523); funds, trusts, and other financial vehicles (NAICS Subsector 525); real estate (NAICS Subsector 531); lessors of nonfinancial intangible assets, except copyright works (NAICS Subsector 533); and management of companies and enterprises (NAICS Subsector 551) should identify or explain the revenues reported (e.g. dollar sales receipts).

Instructions to FTC Form **C4** (rev. 04/07/05)

* * * * *

By direction of the Commission.

Donald S. Clark,

Secretary.

[FR Doc. 05–16087 Filed 8–12–05; 8:45 am]

BILLING CODE 6750–01–P

DEPARTMENT OF COMMERCE

International Trade Administration

19 CFR Part 351

[Docket No. 050803215–5215–01]

RIN 0625–AA69

Procedures for Conducting Five–year (''Sunset'') Reviews of Antidumping and Countervailing Duty Orders

AGENCY: Import Administration, International Trade Administration, Department of Commerce.

ACTION: Proposed rule; request for comments.

SUMMARY: The Department of Commerce (''the Department'') proposes to amend its regulations related to sunset reviews to conform the existing regulation to the United States' obligations under Articles 6.1, 6.2, and 11.3 of the Agreement on the Implementation of Article VI of the General Agreement on Tariffs and Trade 1994 (''Antidumping Agreement''). The proposed regulations, if adopted, would amend the ''waiver'' provisions which govern treatment of interested parties who do not provide a substantive response to the Department's notice of initiation of a sunset review and clarify the basis for parties' participation in a public hearing in an expedited sunset review.

DATES: To be assured of consideration, written comments must be received not later than September 14, 2005.

ADDRESSES: A signed original and two copies of each set of comments, including reasons for any recommendation, should be submitted to Joseph A. Spetrini, Acting Assistant Secretary for Import Administration, Central Records Unit, room 1870, U.S. Department of Commerce, Pennsylvania Avenue and 14th Street, NW, Washington, DC, 20230; attention: Proposed Amendments to Sunset Procedural Regulations.

FOR FURTHER INFORMATION CONTACT: Stacy J. Ettinger or Patrick V. Gallagher, Office of the Chief Counsel for Import Administration, room 3622, U.S. Department of Commerce, Pennsylvania Avenue and 14th Street NW, Washington, DC, 20230; telephone: (202)482–4618 or (202)482–5053, respectively.

SUPPLEMENTARY INFORMATION:

Background

On March 20, 1998, the Department published regulations addressing the procedures for participation in, and conduct of, sunset reviews. See 63 Fed. Reg. 13516. On December 17, 2004, the Dispute Settlement Body (DSB) of the World Trade Organization (WTO) adopted the reports of the Appellate Body (''AB'') and the dispute settlement panel in *United States—Sunset Reviews of Anti–dumping Measures on Oil Country Tubular Goods from Argentina*, WT/DS268/AB/R (November 29, 2004) and WT/DS268/R (July 16, 2004), respectively. The AB/panel found that the waiver provisions of section 751(c)(4)(B) of the Tariff Act of 1930 and section 351.218(d)(2)(iii) of Commerce's sunset regulations are inconsistent with Articles 6.1, 6.2, and 11.3 of the Antidumping Agreement.

Section 123 of the Uruguay Round Agreements Act (''URAA'') governs the process for changes to the Department's regulations where a dispute settlement panel and/or the Appellate Body finds a regulatory provision to be inconsistent with any of the WTO agreements. Consistent with section 123(g)(1)(C), the Department is publishing proposed amendments to its regulations related to sunset reviews to conform the existing regulations to the United States' obligations under Articles 6.1, 6.2, and 11.3 of the Antidumping Agreement. The proposed regulations, if adopted, would amend the ''waiver'' provisions which govern treatment of interested parties who do not provide a complete substantive response to the Department's Notice of Initiation of a sunset review and clarify the basis for parties' participation in a public hearing in an expedited sunset review.

Explanation of Proposed Amendments

Section 351.218

Section 751(c)(4)(B) of the Tariff Act provides that where an interested party ''waives'' its participation in a sunset review, the Department ''shall conclude that revocation of the order ... would be likely to lead to continuation or recurrence of dumping or a countervailable subsidy (as the case may be) with respect to that interested party.'' Paragraph (d)(2) of 19 CFR 351.218 deals with the procedure for waiving participation in a sunset review before the Department. Specifically, paragraph (d)(2)(i) provides for filing a ''statement of waiver'' for parties electing not to participate in the Department's sunset review (so–called ''affirmative waiver''), and paragraph (d)(2)(iii) provides that failure to file a complete substantive response to a notice of initiation also will be treated as a waiver of participation (so–called ''deemed waiver''). The panel and Appellate Body found that the operation of the statutory and regulatory waiver provisions was inconsistent with the obligation under Article 11.3 to arrive at a ''reasoned conclusion'' because the Department's order–wide likelihood determination would be based, at least in part, on statutorily–mandated ''assumptions'' about a company's likelihood of dumping. The AB/panel also found that the operation of paragraph (d)(2)(iii) was inconsistent with ''due process rights'' of Articles 6.1 and 6.2, because the Department could *assume* likelihood with respect to a particular company even though that party had filed a substantive response to the notice of initiation, albeit an ''incomplete'' response.

To implement the AB/panel findings with respect to the operation of the waiver provisions, we propose to modify the Department's regulations to eliminate the possibility that the Department's order–wide likelihood determinations would be based on *assumptions* about likelihood of continuation or recurrence of dumping or a countervailable subsidy due to interested parties' waiver of participation in sunset reviews. Thus, we propose the following three modifications to paragraph (d)(2) of 19 CFR 351.218. First, with respect to so–called ''affirmative waivers'' set forth in paragraph (d)(2)(i) which provides that a party may elect not to participate in the Department's sunset review by filing a ''statement of waiver'' within 30 days of initiation of the sunset review we propose to amend the contents of a ''statement of waiver'' which are set forth in paragraph (d)(2)(ii). Specifically, we proposed to amend paragraph (d)(2)(ii) to require that a party filing a Statement of Waiver include a statement that it is likely to dump or benefit from a countervailable subsidy (as the case may be) or, in the case of a foreign government in a CVD sunset review, provide a countervailable subsidy, if the order is revoked or the investigation is terminated. Second, we propose to eliminate paragraph (d)(2)(iii) which provides that an interested party is ''deemed'' to have waived participation in the sunset review by failing to file a complete substantive response to a notice of initiation. Thus, the Department will no longer make company–specific likelihood findings for companies that fail to file a statement of waiver and fail to file a substantive response to the notice of initiation. Finally, we propose to modify paragraphs (d)(2)(iv)(C) and (e)(1)(ii)(B)(3) which address waiver of participation by a foreign government in a CVD sunset review to eliminate cross–references to paragraph (d)(2)(iii) and to

eliminate certain language that might suggest the possibility that the Department's order–wide likelihood determination in a CVD sunset review would be based on assumptions about likelihood of continuation or recurrence of a countervailable subsidy. In sum, these three modifications to the waiver provisions of the Department's sunset regulations will ensure that there is no longer the possibility that the Department's order–wide likelihood determinations might be based on *assumptions* about likelihood of continuation or recurrence of dumping or a countervailable subsidy. The Department will make its order–wide likelihood determinations on the basis of the facts and information available on the record of the sunset review.

Section 351.309

The Appellate Body upheld the panel's finding that the operation of paragraph (d)(2)(iii) of 19 CFR 351.218 was inconsistent with Article 6.2 in that it allegedly denies an interested party that is deemed to have waived its right to participate in a sunset review by submitting an incomplete substantive response the right to participate in a hearing. Paragraph (d)(2)(iii) does not explicitly address the issue of hearings; nor do the regulations preclude hearings in expedited sunset reviews resulting from the application of the waiver provisions. Nevertheless, in the interest of alleviating any perceived confusion with respect to participation in a hearing in an expedited sunset review, we propose to modify paragraph (c)(1)(iii) of 19 CFR 351.309 to clarify that the Secretary will specify a due date for case briefs in an expedited sunset review. Case briefs provide the basis for parties' affirmative presentations at a hearing. In addition, as discussed above, for other reasons we propose to eliminate paragraph (d)(2)(iii) in its entirety.

Effective Date

Pursuant to section 123(g)(2) of the URAA, the final amended regulation may not become effective until the end of the 60–day period beginning on the date on which the Department and the Office of the U.S. Trade Representative (''USTR'') undertake consultations with the appropriate congressional committees concerning the proposed contents of the final rule. Since the date of consultations has not yet been determined, we are unable to project the possible effective date at this time. If the proposed regulation is adopted, we will publish the effective date in the notice of final rule based upon the date on which USTR and the Department consult with Congress.

Classification

E.O. 12866

This proposed rule has been determined to be not significant under E.O. 12866.

Paperwork Reduction Act

Notwithstanding any other provision of law, no person is required to respond to nor shall a person be subject to a penalty for a failure to comply with a collection of information subject to the requirements of the Paperwork Reduction Act unless that collection of information displays a currently valid Office of Management and Budget (OMB) control number. This proposed rule involves collection–of-information requirements subject to the Paperwork Reduction Act, 44 USC Chapter 35. The requirements have been approved by OMB under control numbers 0625–0148.

E.O. 12612

This proposed rule does not contain federalism implications warranting the preparation of a Federalism Assessment.

Regulatory Flexibility Act

The Chief Counsel for Regulation of the Department of Commerce has certified to the Chief Counsel for Advocacy of the Small Business Administration that these proposed rules, if adopted, would not have a significant impact on a substantial number of small entities. We cannot identify the number of small entities that may be affected by this rule because we do not keep track of that information. The Department's existing regulations contain procedures for the conduct of five–year (''sunset'') reviews in which the Secretary considers whether to revocation of an order is likely to lead to continuation or recurrence of dumping or a countervailable subsidy. The proposed amendments revise the process for interested parties electing not to participate in a sunset review and clarify the basis for parties' participation in a hearing in an expedited sunset review. These actions, in and of themselves, will not have a significant economic impact because they do not impose any new reporting requirements. Therefore, the Chief Counsel concluded that the proposed rules would not have a significant impact on a substantial number of small business entities, and a regulatory flexibility analysis was not prepared.

List of Subjects in 19 CFR Part 351

Administrative practice and procedure, Antidumping duties, Business and industry, Cheese, Confidential business information, Countervailing duties, Investigations, Reporting and record keeping requirements.

Dated: August 5, 2005.

Joseph A. Spetrini,

Acting Assistant Secretary for Import Administration.

For the reasons stated, 19 CFR Part 351 is amended as follows:

PART 351—ANTIDUMPING AND COUNTERVAILING DUTIES

Subpart B—Antidumping and Countervailing Duty Procedures

1. Section 351.218 is amended by revising paragraphs (d)(2)(ii), (d)(2)(iv) introductory text, (d)(2)(iv)(C), (e)(1)(ii)(B) introductory text, and (e)(1)(ii)(B)(3), and removing and reserving paragraph (d)(2)(iii), as follows:

§351.218 Sunset reviews under section 751(c) of the Act.

* * * * *

(d) Participation in sunset review (1) * * *

(2) Waiver of response by a respondent interested party to a notice of initiation (i) * * *

(ii) *Contents of statement of waiver.* Every statement of waiver must include a statement indicating that the respondent interested party waives participation in the sunset review before the Department; a statement that the respondent interested party is likely to dump or benefit from a countervailable subsidy (as the case may be) if the order is revoked or the investigation is terminated; in the case of a foreign government in a CVD sunset review, a statement that the government is likely to provide a countervailable subsidy if the order is revoked or the investigation is terminated; and the following information: * * *

* * * * *

(iii) [*reserved*]

* * * * *

(iv) *Waiver of participation by a foreign government in a CVD sunset review.* Where a foreign government waives participation in a CVD sunset review under paragraph (d)(2)(i) of this section, the Secretary will:

* * * * *

(C) Base the final results of review on the facts available in accordance with § 351.308(f).

* * * * *

(e) *Conduct of sunset review*- (1) * * *

(ii) *Adequacy of response from respondent interested parties*-(A) * * *

(B) *Failure of a foreign government to file a substantive response to a notice of initiation in a CVD sunset review*. If a foreign government fails to file a complete substantive response to a notice of initiation in a CVD sunset review under paragraph (d)(3)(v) of this section or waives participation in a CVD sunset review under paragraph (d)(2)(i) of this section, the Secretary will:

* * * * *

(3) Base the final results of review on the facts available in accordance with § 351.308(f).

* * * * *

Subpart C—Information and Argument

2. Section 351.309(c)(1)(iii) is revised to read as follows:

§351.309 Written argument.

* * * * *

(c) *Case brief*. (1) * * *

(iii) For the final results of an expedited sunset review, expedited antidumping review, Article 8 violation review, Article 4/ Article 7 review, or section 753 review, a date specified by the Secretary.

* * * * *

[FR Doc. 05–16133 Filed 8–12–05; 8:45 am]

BILLING CODE 3510–DS–S

DEPARTMENT OF THE TREASURY

Alcohol and Tobacco Tax and Trade Bureau

27 CFR Part 9

[Notice No. 50]

RIN 1513–AA82 thru 1513–AA88

Proposed Alta Mesa, Borden Ranch, Clements Hills, Cosumnes River, Jahant, Mokelumne River, and Sloughhouse Viticultural Areas

AGENCY: Alcohol and Tobacco Tax and Trade Bureau, Treasury.

ACTION: Notice of proposed rulemaking.

SUMMARY: The Alcohol and Tobacco Tax and Trade Bureau proposes to establish seven new viticultural areas within the boundary of the existing Lodi viticultural area, which lies within southern Sacramento and northern San Joaquin Counties in California. The seven proposed areas are Alta Mesa, Borden Ranch, Clements Hills, Cosumnes River, Jahant, Mokelumne River, and Sloughhouse. We designate viticultural areas to allow vintners to better describe the origin of their wines and to allow consumers to better identify wines they may purchase. We invite comments on these proposed additions to our regulations.

DATES: We must receive written comments on or before October 14, 2005.

ADDRESSES: You may send comments to any of the following addresses:

- Chief, Regulations and Procedures Division, Alcohol and Tobacco Tax and Trade Bureau, Attn: Notice No. 50, P.O. Box 14412, Washington, DC 20044–4412.
- 202–927–8525 (facsimile).
- *nprm@ttb.gov* (e-mail).
- *http://www.ttb.gov/alcohol/rules/index.htm.* An online comment form is posted with this notice on our Web site.
- *http://www.regulations.gov* (Federal e-rulemaking portal; follow instructions for submitting comments).

You may view copies of this notice, the petition, the appropriate maps, and any comments we receive about this proposal by appointment at the TTB Library, 1310 G Street, NW., Washington, DC 20220. To make an appointment, call 202–927–2400. You may also access copies of the notice and comments online at *http://www.ttb.gov/alcohol/rules/index.htm.*

See the Public Participation section of this notice for specific instructions and requirements for submitting comments, and for information on how to request a public hearing.

FOR FURTHER INFORMATION CONTACT: N.A. Sutton, Alcohol and Tobacco Tax and Trade Bureau, Regulations and Procedures Division, 925 Lakeville St., No. 158, Petaluma, California 94952; telephone 415–271–1254.

SUPPLEMENTARY INFORMATION:

Background on Viticultural Areas

TTB Authority

Section 105(e) of the Federal Alcohol Administration Act (the FAA Act, 27 U.S.C. 201 *et seq.*) requires that alcohol beverage labels provide consumers with adequate information regarding product identity and prohibits the use of misleading information on those labels. The FAA Act also authorizes the Secretary of the Treasury to issue regulations to carry out its provisions. The Alcohol and Tobacco Tax and Trade Bureau (TTB) administers these regulations.

Part 4 of the TTB regulations (27 CFR part 4) allows the establishment of definitive viticultural areas and the use of their names as appellations of origin on wine labels and in wine advertisements. Part 9 of the TTB regulations (27 CFR part 9) contains the list of approved viticultural areas.

Definition

Section 4.25(e)(1)(i) of the TTB regulations (27 CFR 4.25(e)(1)(i)) defines a viticultural area for American wine as a delimited grape-growing region distinguishable by geographical features, the boundaries of which have been recognized and defined in part 9 of the regulations. These designations allow vintners and consumers to attribute a given quality, reputation, or other characteristic of a wine made from grapes grown in an area to its geographical origin. The establishment of viticultural areas allows vintners to describe more accurately the origin of their wines to consumers and helps consumers to identify wines they may purchase. Establishment of a viticultural area is neither an approval nor an endorsement by TTB of the wine produced in that area.

Requirements

Section 4.25(e)(2) of the TTB regulations outlines the procedure for proposing an American viticultural area and provides that any interested party may petition TTB to establish a grape-growing region as a viticultural area. Section 9.3(b) of the TTB regulations requires the petition to include—

- Evidence that the proposed viticultural area is locally and/or nationally known by the name specified in the petition;
- Historical or current evidence that supports setting the boundary of the proposed viticultural area as the petition specifies;
- Evidence relating to the geographical features, such as climate, elevation, physical features, and soils, that distinguish the proposed viticultural area from surrounding areas;
- A description of the specific boundary of the proposed viticultural area, based on features found on United States Geological Survey (USGS) maps; and
- A copy of the appropriate USGS map(s) with the proposed viticultural area's boundary prominently marked.

Lodi American Viticultural Areas Steering Committee Petitions

The Lodi American Viticultural Areas (LAVA) Steering Committee has petitioned TTB to establish seven new viticultural areas within the boundary of the existing Lodi viticultural area (27 CFR 9.107) in southern Sacramento and northern San Joaquin Counties in California. The seven LAVA Steering Committee petitions propose the creation of the Alta Mesa, Borden

Ranch, Clements Hills, Cosumnes River, Jahant, Mokelumne River, and Sloughhouse viticultural areas. The 16 wine industry members that comprise the committee state that their proposal subdivides the existing Lodi area into ''seven smaller viticultural areas of distinction.''

The establishment of the seven proposed viticultural areas would not in any way affect the existing 551,500-acre Lodi viticultural area. The Lodi area will continue as a single American viticultural area within its current boundary. However, TTB notes that the seven proposed areas fall entirely within the 458,000 acres within the original 1986 boundary of the Lodi viticultural area and thus, as proposed, would not include any of the 93,500 acres added to the Lodi area when it was expanded along its western and southern borders in 2002. (See T.D. ATF–223, published in the **Federal Register** on February 13, 1986 (51 FR 5324) for the Lodi viticultural area as originally defined. See T.D. ATF–482, published in the **Federal Register** on September 4, 2002 (67 FR 56481), for the Lodi area expansion in 2002.)

Proposed Viticultural Areas—Background

Location

The proposed Cosumnes River, Alta Mesa, and Sloughhouse viticultural areas lie, respectively, in the northwestern, north-central, and northeastern portions of the existing Lodi viticultural area and are entirely within Sacramento County. The proposed Clements Hills and Mokelumne River areas cover, respectively, the southeastern and southwestern portions of the existing Lodi viticultural area and are entirely within San Joaquin County. The proposed Borden Ranch and Jahant areas cover, respectively, the east-central and central portions of the existing Lodi viticultural area and lie in portions of both Sacramento and San Joaquin Counties.

The Cosumnes River flows southwest across the Sacramento County, portion of the Lodi viticultural area and crosses the proposed Sloughhouse, Alta Mesa and Cosumnes River viticultural areas. The Cosumnes River joins the Mokelumne River, which flows west, then northwest, through the San Joaquin County portion of the Lodi area. The Mokelumne River crosses the proposed Clements Hills and Mokelumne River viticultural areas, and forms a portion of the southwestern boundary of the proposed Jahant area. Neither river touches the proposed Borden Ranch viticultural area.

Summary of Distinguishing Features

According to the LAVA Steering Committee petition, climate data—such as temperature, precipitation, and wind patterns—outline the distinctive microclimates of the seven proposed viticultural areas. To varying degrees, the petition notes, the Lodi viticultural area's climate is affected by its inland San Joaquin valley location between the Sierra Nevada Range to the east and the Sacramento Delta, with its Pacific coast marine influence, to the west.

Differences in topography, elevation, and soils also help to distinguish the seven proposed areas from one another, according to the petition. In addition, the LAVA Committee uses the Storie Index (Huntington, 1992) to rate the agricultural potential of the soils within the seven proposed viticultural areas. This index ranges from 100 points for highly suitable soils to 0 points for unsuitable soils. The petition notes that Storie Index ratings for the seven proposed areas range from 95 to 15 points.

The table below lists the general features of each of the seven proposed viticultural areas as outlined in the LAVA Steering Committee petition:

Name of proposed viticultural area	Total acreage	Relative growing season length *	Storie (soil) index	Location within the Lodi viticultural area
Alta Mesa	55,400	3	25–40	north-central.
Borden Ranch	70,000	2	15–30	east-central.
Clements Hills	85,400	2	15–30	southeast.
Cosumnes River	54,700	2	24–40	northwest.
Jahant	28,000	1	25–40	central.
Mokelumne River	85,700	1	80–95	southwest.
Sloughhouse	78,800	4	15–30	northeast.

* 1 = coolest; 4 = warmest.

In addition, the LAVA Steering Committee petition provided an overview of each proposed area's grape-growing environment, which we outline in this table:

Proposed viticultural area	Description
Alta Mesa	Intermediate-elevation river terraces and fans; prairie environment; San Joaquin soil series of intermediate age; heavy, red, clay loams; slightly warmer and less windy climate than the lowlands to the west; primarily red grape varietals.
Borden Ranch	High elevations, very old river terraces and hills; oldest valley floor soils; vernal pools and prairie mound environment with high ridges; windy, and warmer, and wetter climate than lowlands to the west; primarily red grape varietals.
Clements Hills	High-elevation river terraces and hills with older soils and volcanic sediments; woodland environment; warmer and wetter climate than lowlands to the west; primarily red grape varietals.
Cosumnes River	Low-elevation meadows and riverbank woodland environment; diversity of young soils along floodplain and sloughs with patches of intermediate-age soils on river terraces and fans; cool and windy climate; primarily white grape varietals.
Jahant	Intermediate elevations with erosion, dissected river terraces and old floodplain deposits; soils are sandy at surface and older and cemented at sub-surface depths; cool and breezy climate; both red and white grape varietals.
Mokelumne River	Intermediate-to-low-elevation alluvial fan; prairie environment; distinctive soils; cool and windy climate; both red and white grape varietals.

Proposed viticultural area	Description
Sloughhouse	High-elevation river terraces and low bedrock hills of the Sierra Range; older soils; woodland environment; warmer and wetter climate than the lowlands to the west; both red and white grape varietals.

The Seven Proposed Viticultural Areas

Below, we discuss the name and boundary evidence and distinguishing features for each of the seven viticultural areas proposed by the LAVA Steering Committee.

Alta Mesa

The proposed Alta Mesa viticultural area is located in Sacramento County in the north-central portion of the established Lodi viticultural area, approximately 21 miles south of the city of Sacramento and 13 miles north of the city of Lodi. The proposed area covers 55,400 acres, of which approximately 5,000 acres are planted to grapes, according to the LAVA Steering Committee petition. This irregularly shaped, five-sided area is 13.3 miles long north to south, and 8.3 miles wide at its widest point east to west. The Alta Mesa region's ''tabletop'' landform and the Joaquin soil series are the proposed area's distinctive and unifying features, the petition states.

Below, we summarize the evidence presented in the Alta Mesa petition.

Name Evidence

The petition explains that the name ''Alta Mesa,'' which means ''high table'' in Spanish, reflects California's history under Spanish-controlled Mexico. The petition states that local ranchers, farmers, and winemakers refer to this region within the existing Lodi viticultural area as ''Alta Mesa,'' and notes that the name is also used for places within the proposed viticultural area. The Alta Mesa Farm Bureau Hall, which is listed on the National Register of Historic Places, is on Alta Mesa Road, while the Alta Mesa Fair is held in Elk Grove and the Alta Mesa Dairy is in Wilton, both of which are within the proposed area's boundary.

The name ''Alta Mesa'' also appears four times on the USGS Sloughhouse map within the proposed viticultural area's boundaries. The map shows the 138-foot high Alta Mesa benchmark and the Alta Mesa Community Hall in section 9, and the Alta Mesa Gun Club in section 8, T6N, R7E. Alta Mesa Road runs along the northern and eastern boundaries of section 5, T6N, R7E, and continues onto the USGS Clay, California, map. The road serves as part of the Alta Mesa viticultural area's proposed eastern boundary.

Boundary Evidence

The Alta Mesa tabletop landform and the extent of the Joaquin soil series generally outline the boundary of the proposed Alta Mesa viticultural area, according to the petition. The petition explains that the American and Cosumnes Rivers have built up intermediate elevation river terraces and alluvial fans, which form the proposed area's tabletop or ''mesa,'' the elevation of which gently rises from approximately 35 feet in the west to 135 feet in the east.

The proposed Alta Mesa area's northern boundary coincides with the established Lodi viticultural area's boundary at Sheldon Road in Sacramento County. According to the petition, eroded terrain and a change in soil types mark the proposed area's southern boundary at the Dry Creek estuary. Changes in elevation from Alta Mesa's tabletop landform, the petition explains, mark the proposed area's eastern and western boundary lines. Also, the petition notes, the proposed area's western boundary marks a transition to the warmer climate of the proposed Cosumnes River viticultural area. In addition, the proposed Alta Mesa area is bordered on the east by the proposed Sloughhouse and Borden Ranch viticultural areas, and, to the south, by the proposed Jahant area.

Distinguishing Features

Topography

The proposed Alta Mesa viticultural area's tabletop or mesa-like landform is one of the area's most distinctive and unifying features, the petition states. The proposed Alta Mesa area sits on intermediate elevation river terraces and alluvial fans, and, despite some depressions and mounds, the area has a generally flat surface. This tabletop landform peaks at 138 feet in its northeast corner and gradually declines to 35 feet along its western side. To the east of the proposed Alta Mesa area, the Sierra Range foothills begin to rise within the proposed Sloughhouse viticultural area. To the proposed Alta Mesa area's immediate west, the proposed Cosumnes River viticultural area has lower elevations that almost dip to mean sea level. Deer Creek and the lower course of the Cosumnes River run parallel and southwest through the proposed area.

Soils

The San Joaquin soil series, which covers about 90 percent of the Alta Mesa region, is also a distinctive feature of the proposed viticultural area, the petition states. The petition explains that this soil series consists of dense, heavy clay that limits rooting depth and the need for irrigation. Classified as Abruptic Durixeralfs, the San Joaquin soils have high percentages of clay and gravel, and intensive reddening and cementation caused by silica, clay, and iron. This soil series has intermediate-age parent materials, 12,000 to 45,000 years old, from stage 2 of the late Pleistocene glacial age, making these some of the oldest soils within the established Lodi viticultural area, according to the petition.

The San Joaquin soil series, the petition emphasizes, creates a distinctive and beneficial viticultural environment in the proposed Alta Mesa viticultural area. The Storie Index, which rates soils from 0 to 100 points for potential agricultural use (100 being most suitable), places the Alta Mesa soils between 25 and 40 points of suitability.

Climate

The petition uses data from the Lodi, Sacramento, Folsom, and Camp Pardee weather stations, which are located close to the proposed Alta Mesa viticultural area. Climatically, the petition states, the proposed Alta Mesa area is a transitional region that is warmer than the other proposed viticultural areas within the existing Lodi viticultural area, except for Sloughhouse, which is further inland to the east of the proposed Alta Mesa area. The petition states that the proposed Alta Mesa area's mean annual temperature is 60.5 degrees Fahrenheit. The average growing season degree-day total * for the proposed Alta Mesa viticultural area, according to the petition, is more than 100 degree days over that of the cooler, proposed Cosumnes River viticultural area to its west and the proposed Borden Ranch and Clements Hills viticultural areas to

* During the growing season, one degree day accumulates for each degree Fahrenheit that a day's average temperature is above 50 degrees, which is the minimum temperature required for grapevine growth. See ''General Viticulture,'' by Albert J. Winkler, University of California Press, 1974.

its east and southeast. Also, the petition continues, the warmer Alta Mesa area is more than 200 degree days higher than the proposed Jahant and Mokelumne River viticultural areas to its south, which are closer to the Sacramento Delta's cooling winds.

The sea breeze from the Pacific Ocean that funnels through the Carquinez Straits and the Sacramento Delta, the petition explains, cools the overall Lodi area. However, this natural air conditioning gradually decreases in intensity and disperses as it flows inland from west to east. As measured across the northern portion of the existing Lodi viticultural area from west to east, these marine winds are strongest in the proposed Cosumnes River viticultural area, less intense in the proposed Alta Mesa area, and weakest in the proposed Sloughhouse area.

Winter fog is also common in the proposed Alta Mesa viticultural area, the petition explains, due to seasonal standing water and cold-air drainage from the foothills to the east. This fog slightly decreases the Alta Mesa area's growing season degree-day total, according to the petition, by limiting the springtime heating of the soil and vines. In addition, the petition notes, the proposed Alta Mesa viticultural area's elevation provides a buffer between this fog from the west and the proposed Sloughhouse viticultural area to the east.

The average annual rain total in the proposed Alta Mesa viticultural area, according to petition evidence, is 18.5 inches. This amount, the petition notes, is less than the 23-inch annual average in Sloughhouse to the east and more than the 14 to 17.5-inch average in regions to Alta Mesa's immediate south.

Borden Ranch

The proposed Borden Ranch viticultural area is located in southern Sacramento and northern San Joaquin Counties in the east-central portion of the established Lodi viticultural area, approximately 27 miles southeast of the city of Sacramento and 13 miles north of the city of Lodi. Covering 70,000 acres, the petition notes that approximately 11,000 acres within the proposed Borden Ranch area are planted to grapes. Located between the Sierra Foothills to the east and the San Joaquin Valley to the west, the proposed area has a distinctive terrain of old alluvial fans, river terraces and plains, and high elevations, according to the LAVA Steering Committee petition.

Below, we summarize the evidence presented in the Borden Ranch petition.

Name Evidence

In 1864, Ivey Lewis Borden established the Borden Ranch in this area, and local residents have used the name ever since, according to the petition. For example, the petition notes an August 16, 1929, Stockton Daily Evening Record article reporting on a barn fire on the Borden Ranch that killed a famous horse. More recently, the Borden Ranch name appeared in a court case and related news media stories involving a developer who sued the U.S. Army Corps of Engineers over wetlands issues, and the petition included a January 6, 2003, Sacramento Business Journal article on the case.

The petition states that since the 1970s, when the Burton and Dedomenico families began the first major grape plantings within the proposed area, local residents have also come to know Borden Ranch for its grape growing. Since that time, the petition continues, Sutter Home, Mondavi, and Delicato have also planted vineyards in the proposed area. The petition also claims that between 1995 and 1996, the single largest vineyard expansion in California history occurred in this area.

In addition, the petition includes articles from the April 8, 2003, Stockton Record and the April 18, 2003, Modesto Bee that discuss recent vineyard development around Clay Station. Named for a popular stagecoach stop from the California Gold Rush days and located on the historic Borden Ranch, Clay Station is noted for its rich reddish clay soils and large stones, which provide for well-drained soil for grape growing, according to the Stockton Record article.

The petition also included statements from local residents regarding the use of the Borden Ranch name. For example, Jeff Sparrowk, a longtime Clements-area rancher, notes that the Borden Ranch is well known for its quality grazing land and vineyards. Robert Disch, a Borden Ranch-area farmer, states that Borden Ranch has become well known since vineyard development began there in the 1970s. He adds, ''We are happy to see the notoriety of this region increasing and can declare that the Borden Ranch has a well-known history in our community.''

Wine industry publications have also taken notice of the Borden Ranch area, according to several articles supplied with the petition. An article titled ''Lodi & the Sacramento Valley Vintage 2000'' from the Wine Institute's ''Harvest 2000'' publication comments on the ''enormous quality potential'' of newer grape growing areas ''such as Borden Ranch.'' The Spring 2002 edition of the ''V&E Trellis Wire,'' a publication of the Department of Viticultural and Enology at the University of California-Davis, includes an article about a student field trip to the Lodi-Woodbridge wine region. The article describes the students' visit to the Borden Ranch, which it characterized as a 4,000-acre vineyard region.

Boundary Evidence

The proposed Borden Ranch viticultural area lies between the Sierra Range foothills to the east and the San Joaquin Valley to the west. The proposed area's northern and southern boundaries are based on two generally parallel streams—the Laguna, a tributary of the Cosumnes River, in the north, and Dry Creek, a tributary of the Mokelumne River, in the south. Both flow northeast to southwest from the Sierra Foothills to the San Joaquin Valley.

The stream deposits from the Laguna and Dry Creek are the distinguishing and unifying feature of the proposed Borden Ranch viticultural area, according to the petition. The proposed area's predominant geographical features are the high elevation, older river terraces and hills located within the watersheds of the Laguna and Dry Creek. These deposits and river terraces, the petition explains, extend from the Laguna in the north to near Liberty Road at the area's proposed southern boundary near Dry Creek. As a result, the proposed Borden Ranch area's northern boundary follows the path of the Laguna, while Dry Creek runs slightly north of the proposed area's southern boundary. The petition uses roads to mark the proposed area's eastern and western boundaries.

Distinguishing Features

Topography

As explained in the petition, the proposed Borden Ranch viticultural area has distinctive terrain due to its location between the Laguna and Dry Creek streams and its location at the base of the Sierra Foothills. The river terraces and stream deposits left by the Laguna and Dry Creek throughout the proposed Borden Ranch area are its distinguishing and unifying feature, according to the petition. The petition notes that the proposed area's lower, western elevations also have prairie mounds and vernal pools along these river terraces. Hills and ridges, which are the eroded remnants of very old river deposits, are found near the Sierra Foothills in the proposed area's higher eastern elevations. In addition, the petition states, the oldest alluvial fans in

Sacramento and San Joaquin Counties are found in the eastern portion of the proposed area close to the Sierras.

The proposed Borden Ranch viticultural area inclines upward toward the Sierra Range, from 73 feet in elevation along its western boundary to 520 feet along its eastern border, a rise of 447 feet. While these elevations and rise are similar to the proposed Sloughhouse viticultural area to the north of the Borden Ranch area, the proposed Alta Mesa and Jahant areas to the west of Borden Ranch have peak elevations of only 137 feet and 105 feet, respectively. The existing Lodi viticultural area's eastern boundary also marks the eastern limit of the proposed Borden Ranch area—beyond which lies the higher elevations and more mountainous terrain of the Sierra Foothills.

Soils

The terrain within the proposed Borden Ranch viticultural area exceeds 700,000 years in age, and is distinctively older than the terrain found in the other six proposed Lodi viticultural areas, according to the petition. In addition, the petition notes, the oldest valley soils in the Lodi region are found on the tops of the terraces above the streams in the proposed Borden Ranch area. These old Durixeralfs soils, the petition states, include the Redding, Hicksville, Corning, and Yellowlark soil series.

In contrast, the petition states that the surface terrain in the proposed Sloughhouse viticultural area to the north of the Borden Ranch area and in the proposed Clements Hills viticultural area to its south is from 125,000 and 250,000 years old, respectively, to 700,000 years old. Additionally, the proposed Borden Ranch viticultural area's soils contain a large percentage of surface and below ground rock cobble, or stones, a feature unique to this area, according to the petition.

Climate

The petition incorporates data from the Lodi, Sacramento, Folsom, Camp Pardee, and Stockton weather stations, which are located near the proposed Borden Ranch viticultural area. The proposed Borden Ranch area, the petition notes, has a greater diversity of topographic-climatic vineyard sites than any of the other six areas proposed for establishment within the existing Lodi viticultural area. As the petition explains, vineyards within the proposed Borden Ranch area are found on hilltops or slopes, and in flat valley floors, facing different compass directions. These topographic variables, the petition states, are responsible for differences of sun, temperature, soil, water, and windiness in the vineyards.

The proposed Borden Ranch area, according to the petition, is windier, warmer, and wetter, than the lowland regions to its west. The combination of cooling Sacramento Delta breezes from the west and cold air drainage from the Sierra Foothills to the east, the petition explains, generates high wind intensity and duration in the proposed Borden Ranch area. The petition notes that this windswept environment, in conjunction with the area's hills and stony soils, creates high water evaporation conditions in the vineyards that lessen the vigor of the grapevine growth.

While the Borden Ranch area's growing season degree day total is similar to that of the other six proposed Lodi viticultural areas, its annual mean temperature of 60.4 degrees Fahrenheit is slightly warmer than the other six proposed areas, with the exception of the Sloughhouse area to its north. Annual rainfall in the Borden Ranch area is 20 inches, which is less than the 23 inches of the Sloughhouse area to the north, the petition states, with the other proposed Lodi viticultural areas averaging as low as 14 inches of annual rainfall.

Clements Hills

Located in northern San Joaquin County, the proposed Clements Hills viticultural area occupies much of the southeastern portion of the established Lodi viticultural area, approximately 41 miles southeast of Sacramento and 13 miles east of the city of Lodi. Covering 85,400 acres, of which approximately 16,000 acres are planted to grapes, the LAVA Steering Committee petition states that the proposed Clements Hills viticultural area is a hilly transitional region between the low, flat San Joaquin Valley floor to the west and the progressively higher Sierra Foothills to the east. The petition adds that the proposed area's high elevation river terraces and rounded hilltops distinguish it from surrounding grape-growing regions.

Below, we summarize the evidence presented in the Clements Hills petition.

Name Evidence

The small town of Clements is located in the northern portion of the proposed Clements Hills viticultural area and is shown on the USGS Clements map and on California highway maps. According to the petition, Thomas Clements, who had settled in the region in 1857, donated 25 acres of land in 1882 to develop the town as a stop on the San Joaquin and Sierra Nevada Railroad. Named for its benefactor, the town served as a shipping point for the region's grain, wool, hops, fruit, and other agricultural commodities.

The proposed ''Clements Hills'' viticultural area name combines the town's name with a reference to the proposed area's hilly terrain. Local residents, realtors, and members of the wine industry, the petition states, commonly use the Clements Hills name to refer to the land within the proposed area's boundaries. For example, realtor Tad Platt states that while marketing materials formerly referred to the ''rolling hills of Clement,'' the area has become better known simply as ''Clements Hills'' in recent years. Farmer Wesley Breitchenbucher and businessman Jeff Myers, whose families have lived in the Clements area for generations, also indicate that the proposed area is known as Clements Hills, according to the petition. The petition quotes Mr. Myers as stating that ''the red, shallow soils of the Clements Hills'' has attracted many vineyards and ranchette developments in the past decade. In addition, the petition notes the use of the Clements Hills name on the label of Vino Con Brio's 2001 Sangiovese wine.

Boundary Evidence

The high elevation river terraces and hills formed by the Mokelumne River, along with the region's older soils, distinguish the proposed Clements Hills area from surrounding areas, according to the petition. The Clements Hills area's proposed northern boundary, along Liberty Road, approximates the northern edge of the higher and older Mokelumne River terraces, the petition explains. The petition adds that, north of the proposed boundary, elevations decrease in the proposed Borden Ranch viticultural area due to the more eroded land found in the vicinity of Dry Creek.

The Clements Hills proposed eastern boundary follows the San Joaquin County line, separating the proposed area from the more mountainous Amador, Calaveras, and Stanislaus Counties. These county lines, according to the petition, mark the transition from the rolling hills of the Clements Hills region to the Sierra Foothills more mountainous environment.

The Clements Hills proposed southern boundary line follows the Calaveras River as it meanders west from the Sierra Foothills to the San Joaquin Valley. To the north of the Calaveras River, within the proposed area's boundaries, the terrain is made up primarily of hills from older Mokelumne River deposits, the petition explains. Also, the petition states, the Calaveras River's alluvial terrace and

fan deposits become progressively younger as one moves south from the proposed area's southern boundary.

The Clements Hills proposed western boundary is along Jack Tone and Elliott roads. To the east of these roads within the proposed area, the petition explains, the terrain consists primarily of hilly deposits from the older alluvial terraces and fans. The petition adds that to the west of Jack Tone and Elliott roads beyond the Clements Hills area, the hilly terrain gives way to younger, sandier, and lower alluvial fan formations and eventually the flat San Joaquin valley floor.

Distinguishing Features

Topography

The proposed Clements Hills viticultural area is located between the flat, low elevations of the San Joaquin Valley floor to its west and the higher Sierra Foothills elevations to its east, according to the petition. Elevations within the proposed boundary area increase from a low of 90 feet on its western, San Joaquin Valley side to greater than 400 feet high at its eastern boundary line, according to the provided USGS maps. The petition also notes that the hilltops within the Clements Hills proposed viticultural area are distinctively convex and rounded. The Clements Hills, the petition states, contrast with the flat valley terrain to the west, the flat hilltops of the proposed Borden Ranch viticultural area to the north, and the more mountainous environment of the Sierras. Through time and weather, the petition adds, the bluffs and terraces of the Mokelumne River have become smooth topped, rolling hills that extend toward the proposed Clements Hills area's southern boundary at the Calaveras River.

Soils

The petition explains that the soils found within the proposed Clements Hills proposed viticultural area are old and primarily classified as Haploxerailfs, Durixeralfs, and Palexeralfs. These brown, red and yellow loams, clay loams, and clays, the petition states, principally belong to the Redding, Cometa, Yellowlark, and Montpellier soil series. Also, the petition notes, these low vigor soils have higher water holding capacities than the stony soils to the north in the proposed Borden Ranch viticultural area, but less than the loamy soils to the west in the proposed Mokelumne River area. Using a scale of 0 to 100, with 0 most unsuitable for agriculture and 100 most suitable, the Storie Index rates the soils in the proposed Clements Hills viticultural area at between 15 and 30, according to the petition.

Climate

Using data from the Lodi, Sacramento, Folsom, Stockton, and Camp Pardee weather stations, which are located close to the proposed Clements Hills viticultural area, the petition states that the proposed Clements Hills viticultural area is warmer and wetter than the regions to its west. While the mean annual temperature of the proposed Clements Hills viticultural area is 60.5 degrees Fahrenheit, which is similar to the other proposed Lodi viticultural areas, the Clements Hills area growing season annual degree-day total is approximately 100 degree days more than the proposed Mokelumne River and Jahant viticultural areas to the west, according to the petition.

The petition notes that fog is less frequent in the proposed Clements Hills viticultural area than in lower elevation, San Joaquin valley floor areas to its west and, therefore, the proposed area receives more hours of warming sunshine. Reduced winds also help warm the proposed Clements Hills area, according the petition. Although the proposed area receives consistent Sacramento Delta breezes, the hilly terrain of the proposed Clements Hills area, the petition notes, reduces the marine wind speed and movement across the proposed area. Air drainage from the higher slopes to the east, the petition adds, reduces frost occurrences in the proposed viticultural area as well.

Rainfall in the proposed Clements Hills viticultural area averages 21 to 22 inches annually, according to the petition, which is more than the lower elevation Jahant and Mokelumne River areas to its west and the Borden Ranch area to its north receive. The petition explains that the proposed Clements Hills area's hilly topography and its location just west of the Sierra Mountains bring more rain to the area since these higher elevations cause moisture-laden Pacific air to rise, forcing the air's moisture to condense and fall to the ground.

Cosumnes River

The proposed Cosumnes River viticultural area is in the northwestern portion of the existing Lodi viticultural area, approximately 20 miles south of the city of Sacramento and 14 miles north of the city of Lodi. Approximately 3,000 acres of the 54,700 acres within the proposed Cosumnes River viticultural area are currently planted to grapes, according to the petition. The climate of the proposed viticultural area, most notably a relatively cool and windy growing season, as well as its young, alluvial soils and low-elevation terrain distinguish the proposed area from surrounding areas, according to the petition.

Below, we summarize the evidence presented in the Cosumnes River petition.

Name Evidence

The May 2001 California State Automobile Association ''Central California'' map shows the Cosumnes River from its headwaters in the Sierra Range to its confluence with the Mokelumne River between Walnut Grove and Thornton, California. The lower portion of the river flows through the proposed Cosumnes River viticultural area. The USGS quadrangle maps for Bruceville, Elk Grove, and Galt, California, which are used to define portions of the proposed Cosumnes River viticultural area boundary, identify the Cosumnes River and show its northeast-to-southwest path through the proposed area. The LAVA Committee considered using the ''Upper Cosumnes'' and ''Lower Cosumnes'' names for the proposed ''Sloughhouse'' and ''Cosumnes River'' viticultural areas, respectively, but believes the proposed name choices are more appropriate.

As noted in the petition, the Cosumnes River name is associated with other places within the proposed viticultural area. For example, the Cosumnes River Preserve, located between Interstate Highways 5 and State Route 99 in southern Sacramento County, is also prominently shown on the California State Automobile Association's Central California map. The petition explains that this Nature Conservancy preserve, a 1,450-acre protected natural area and wildlife habitat, is in the heart of the proposed Cosumnes River viticultural area. Also, Cosumnes River College is located in the suburbs of Sacramento, just north of the proposed area's northern boundary.

Historically, the petition explains, the name ''Cosumnes'' comes from the Native American Miwok people's term for ''salmon people.'' The petition adds that an alternative Miwok translation is ''the place of the koso berry.'' John Sutter, an early settler, provides an 1841 written reference to the term ''Cosumnes River,'' the petition states, and 1845 and 1848 maps by John Fremont label this waterway as the ''Cosumnes River.'' The March 1, 1851, edition of the Stockton Times, in describing the region, states: ''Some of the earlier settlements made in this country were along the Cosumnes''.

Boundary Evidence

The existing Lodi viticultural area boundary marks the limits of the proposed Cosumnes River viticultural area to the north and west. To the east, the proposed Cosumnes River viticultural area shares a boundary with the proposed Alta Mesa viticultural area, and, to the south, with the proposed Jahant and Mokelumne River viticultural areas. A portion of the Mokelumne River marks the proposed area's southern boundary line.

The proposed Cosumnes River viticultural area lies south of the city of Sacramento and borders the west side of the town of Galt. The proposed area primarily produces white wine grape varietals, as compared to red grape varietals in areas to the east and a mixture of red and white grape varietals in areas to the south.

Distinguishing Features

The relatively cool and windy growing season of the proposed Cosumnes River viticultural area, its young, alluvial soils, and its low-elevation terrain distinguish the proposed area from surrounding areas, according to the petition.

Topography

The petition explains that the proposed Cosumnes River viticultural area topography includes wetlands, natural and artificial levees, sloughs, streams, and the Cosumnes River. In addition, the Mokelumne River marks a portion of the area's southern boundary. A large alluvial fan crosses the proposed Cosumnes River viticultural area and slopes towards its southwest corner.

The low elevations found in the proposed Cosumnes River viticultural area distinguish it from the surrounding, higher-elevation areas, the petition states. At its southwestern corner, where the Cosumnes River joins the Mokelumne River, the elevation of the proposed Cosumnes River viticultural area dips to almost sea level. Elevations within the proposed area gradually rise to a high point of 48 feet at its southeast corner, according to the provided UGSS maps. In contrast, the petition notes, the proposed Alta Mesa viticultural area, to the east of the proposed Cosumnes River viticultural area, has elevations to 138 feet. To the south, the proposed Jahant viticultural area rises to 80 feet in elevation, and the proposed Mokelumne River viticultural area rises to 85 feet, according to the petition.

Soils

The proposed Cosumnes River viticultural area, the petition explains, is dominated by young, alluvial soils that distinguish it from the surrounding areas. The petition notes that 60 percent of the agricultural land within the proposed area is covered by a series of younger alluvial and organic soils, Xerothents and Histosols. These younger soils, the petition continues, predominate in the lower areas, including the floodplains, sloughs, and wetlands, and around the Cosumnes River and its tributaries along the western side of the proposed viticultural area. The intermediate-age, deep reddish, gravelly clay loam soils of the San Joaquin series cover the remaining 40 percent of the agricultural land within the proposed Cosumnes River viticultural area, according to the petition. These soils, classified as Abruptic Durixeralfs, have good water-holding capacity and moderate fertility.

To the east of the proposed Cosumnes River viticultural area, the proposed Alta Mesa viticultural area soils are of intermediate age, and about 90 percent of its soils are from the San Joaquin series, according to the petition. To the south, the proposed Jahant and Mokelumne River viticultural areas have a combination of young and intermediate in age soils. According to the petition, the Storie Index, which rates soils from 0 to 100 points for potential agricultural use, places the Cosumnes River soils at between 24 and 40 points for suitability.

Climate

The petition provides statistics and data from the Lodi, Sacramento, and Folsom weather stations, which are close to the proposed Cosumnes River viticultural area. Overall, according to the petition, the proposed Cosumnes River viticultural area has a cool and breezy climate.

The proposed Cosumnes River viticultural area has a mean annual growing season temperature of approximately 60 degrees Fahrenheit and intermediate level winds, the petition explains. The surrounding areas to the north and east are warmer and have less wind than the proposed Cosumnes River viticultural area, according to the petition. Also, to the south, the proposed Jahant and Mokelumne River viticultural areas are cooler and have stronger marine winds. The petition adds that the Pacific Ocean's cooling breezes funnel eastward through San Francisco's Golden Gate, the Carquinez Strait, and the Sacramento Delta to reach the Lodi area. These marine breezes cool the Lodi area's lower elevations, including the Cosumnes River floodplain and the areas to the river's south. The intensity and effect of these cooling winds, according to the petition, dissipate as they continue eastward over the proposed Cosumnes River viticultural area to the proposed Alta Mesa and Sloughhouse viticultural areas.

The petition states that maritime and inland fog is persistent in the low elevations of the proposed Cosumnes River viticultural area. This fog cools the proposed viticultural area more than the surrounding areas, which are less influenced by the maritime winds. The annual precipitation within the proposed Cosumnes area is 17.4 inches, according to the petition, which is more than the low elevation areas to its immediate south, but less than the high elevation regions to the north and east of the proposed viticultural area's boundaries.

Jahant

The proposed Jahant viticultural area is located in the center of the existing Lodi viticultural area, about 29 miles south of the city of Sacramento and 7 miles north of the city of Lodi. Currently, approximately 8,000 acres of the 28,000 acres within the proposed Jahant viticultural area are planted to grapes, according to the petition. The pink Jahant loam soil found in the proposed viticultural area is its most distinguishing characteristic, according to the petition, giving the Jahant area a unique grape-growing environment. Also, the petition notes that the proposed Jahant viticultural area's climate is cooler, dryer, and windier than most of the other proposed viticultural areas discussed in this notice. The petition adds that the terrain within the proposed Jahant viticultural area is noted for its river terraces and old floodplain deposits.

Below, we summarize the evidence presented in the Jahant petition.

Name Evidence

The ''Jahant'' name is associated with the central portion of the established Lodi viticultural area in southern Sacramento and northern San Joaquin Counties, according to the petition. The name comes from Peter Jahant and several of his brothers, all 1850s settlers to the area, the petition states. The Jahant family settled and successfully farmed in the Acampo area of the Lodi region, and, in 1912, Peter Jahant's son Charles planted 130 acres to grapes on the original family farm and on additional purchased land.

Jahant Slough and Jahant Road, a light-duty, east-west road, are shown on the Lodi North and Lockeford USGS maps, in the approximate center of the proposed Jahant viticultural area. Also, Jahant Road is shown in sections B–4,

B–5, C–5, and C–6 of the Gold Country map, published in April 2002 by the California State Automobile Association. The Jahant Equestrian Center is on Jahant Road, and some area vineyards use Jahant in their names, according to the petition.

Boundary Evidence

The petition states that the unique pink Rocklin-Jahant loam soils found within the proposed Jahant viticultural area and the deep dissections through river deposits left by flooding within the past 20,000 years distinguish the proposed Jahant area from the surrounding proposed viticultural areas. To the south, the proposed Mokelumne River viticultural area has predominantly young, light colored sandy soils, the petition notes, while to the north, the proposed Alta Mesa viticultural area has predominantly intermediate age red soils. The petition states that the boundaries of the proposed Jahant viticultural area encompass the extent of the Jahant soils.

The petition also explains that dissected river terraces and old floodplain deposits, located between Dry Creek and the Mokelumne River, distinguish the proposed Jahant area from the surrounding areas. Dry Creek is part of the northern boundary of the proposed Jahant viticultural area, and the creek flows through its northwest section. The Mokelumne River forms the western boundary of the proposed Jahant area, close to where it joins with the Cosumnes River, according to the provided USGS maps.

Distinguishing Features

Topography

Elevations in the proposed Jahant viticultural area vary from about 10 feet to 100 feet, according to USGS maps of the area. Also, these elevations rise from the west to the east, increasing toward the Sierra Range. The proposed viticultural area, the petition explains, is dotted with small lakes, sloughs, rivers on the north and west sides, the larger Tracy Lake to the east, and a gas field in the southeast corner. The contours of the area, predominantly river terraces and old, eroded floodplain deposits, the petition continues, have developed from the actions of Dry Creek and the Mokelumne River.

Soils

The proposed Jahant viticultural area, located primarily between Dry Creek and the Mokelumne River, has distinctive pink Rocklin-Jahant soils that are principally sandy loams and sandy clay loams with massive structure, thickness, and hardened depth, the petition explains. The soils are classified as Mollic Pelexeralfs. These old soils, the petition continues, have younger sandy surfaces and are generally different in structure, thickness, and depth from the San Joaquin deep reddish, gravelly clay loam soils found north of the proposed Jahant viticultural area. To the south, the petition states, the light sandy loam Tokay and Acampo soils are young, deep and well drained, tend to be granular and crumbly, and of a fine texture without gravel, in contrast to the Jahant soils.

Climate

The petition provides statistics and data from the Lodi, Sacramento, Folsom, Camp Pardee, and Stockton weather stations, which are close to the proposed Cosumnes River viticultural area. The proposed Jahant viticultural area, the petition comments, has cool climatic characteristics similar to those of the proposed Mokelumne River viticultural area to the south. Both regions, according to the petition, receive the Pacific marine breezes that funnel east from the San Francisco Golden Gate, through the Carquinez Straights, the Sacramento Delta, and into the Lodi area. The petition also notes the cooling effect of persistent valley and coastal fog within the proposed boundaries.

The winds in the proposed Jahant viticultural area are of high intensity and prolonged duration, similar to those of the proposed Mokelumne River viticultural area to the south, the petition states. In contrast, to the north and northeast of the proposed Jahant area, the proposed Alta Mesa and Sloughhouse viticultural areas have less wind intensity and warmer temperatures, according to the petition.

The mean annual temperature of the proposed Jahant viticultural area is 60.1 degrees Fahrenheit, which is lower than the majority of other proposed viticultural areas discussed in this notice, according to the petition. Also, the growing season degree-day annual totals are between 100 and 400 degree days lower than other parts of the Lodi region, except for the proposed Mokelumne River viticultural area to the immediate south. Finally, the Jahant area's annual rainfall is 18.0 inches, which is less than rainfall totals in the other areas of the Lodi region with the exception of proposed Mokelumne River viticultural area.

Mokelumne River

The proposed Mokelumne River viticultural area is in northern San Joaquin County in the southwestern portion of the existing Lodi viticultural area. According to the petition, the proposed Mokelumne River viticultural area covers 85,700 acres, of which approximately 42,000 acres are vineyards. The young alluvial fan created by the Mokelumne River distinguishes the proposed Mokelumne River viticultural area from the surrounding areas, the petition states. In addition, the distinctively breezy climate of this proposed viticultural area is the coolest within the original Lodi viticultural area, according to the petition.

Below, we summarize the evidence presented in the Mokelumne River petition.

Name Evidence

Historically, the ''Mokelumne'' name is derived from the Miwok Indians and has been translated as ''the place of the fish net,'' according to the petition. Known earlier as the Rio Mokellemos, the present spelling of Mokelumne was set in 1848 by John C. Fremont, as documented in the ''California Place Names,'' by Erwin Gudde, published in 1960 by the University of California Press.

The Mokelumne River, which flows west from the Sierras into the San Joaquin Valley, is shown on a number of USGS maps, including the Lockeford, Lodi North, Bruceville, Thornton, Clements, and Wallace maps. Other maps also show the river, including the Gold Country map published by the California State Automobile Association in April 2002.

Boundary Evidence

The petition explains that the ''classic, young'' alluvial fan of the Mokelumne River extends east-to-west through the proposed Mokelumne River viticultural area. Given its distinctive geology and topography, the river's alluvial fan contrasts with the geology and topography of the other proposed viticultural areas discussed in this notice and the areas beyond. According to the petition, east of Jack Tone Road, beyond the proposed Mokelumne River viticultural area boundary line, are the older terrace deposits of the proposed Clements Hills viticultural area, while south of the proposed boundary, toward Linden and Farmington, the coarse deposits of the Calaveras River alluvial fan contrast with the sandy loam of the proposed Mokelumne River viticultural area. To the west of Interstate 5, and beyond the original Lodi viticultural area western boundary line, very young organic and inorganic soils dominate the Sacramento Delta region, according

to the petition. To the north of the proposed Mokelumne River area boundary line are the older river deposits that distinguish the Jahant region.

Distinguishing Features

Topography

The Mokelumne River meanders through the northern portion of the proposed Mokelumne River viticultural area, while creeks, sloughs, a canal, and an aqueduct run through its interior. Also, the city of Lodi is located on the south bank of the Mokelumne River in the approximate center of the proposed viticultural area.

The topography of the proposed Mokelumne River viticultural area is dominated by a relatively young alluvial fan over an intermediate age fan, according to the petition. To the east, the fan joins with the older Mokelumne River terrace deposits along Jack Tone Road, which serves as part of the boundary line for proposed viticultural area, the petition notes. The Mokelumne River alluvial fan extends from the higher eastern elevations of the Clements region to the lower elevations along Interstate 5 and Eight Mile Road to the southwest, according to the provided USGS maps and the petition. The USGS maps of the proposed Mokelumne River viticultural area show elevations sloping downward to the west from a high of 100 feet at the northeast corner of the proposed area to a low of 5 feet at its southwest corner.

Soils

The petition explains that sandy loam Tokay and Acampo soils dominate the proposed Mokelumne River viticultural area. These soils are young, deep and drain well, according to the petition. Also, the soils tend to be granular and crumbly, of a fine texture and without gravel. The sandy loams in the region, the petition describes, are generally between 6 and 12 feet in depth with low moisture holding capacity, especially in the western portion of the proposed area.

Climate

The petition uses climate statistics and data from the Lodi weather station, which is located near the proposed Mokelumne River viticultural area. The climate of the proposed Mokelumne River viticultural area is the coolest within the existing Lodi viticultural area, the petition explains. The proposed Mokelumne River viticultural area, the petition continues, is the closest of the seven proposed Lodi viticultural areas to the Carquinez Straights that funnel Pacific Ocean breezes eastward from the Golden Gate, through the Sacramento Delta, to the Lodi area.

The winds in the proposed Mokelumne River viticultural area are of high intensity and prolonged duration, blowing more than 70 percent of the time, the petition states. The winds lose little intensity as they cross the low elevations and flat terrain within the proposed boundaries, according to the petition.

The mean annual temperature within the proposed Mokelumne viticultural area is 60.0 degrees Fahrenheit, which is lower than the other proposed viticultural areas discussed in this notice, according to the petition. Also, the growing season degree-day annual totals are between 50 and 450 degree days lower than those found in the other six proposed Lodi viticultural areas. Rainfall within the proposed Mokelumne River viticultural area is 17.57 inches, which is the lowest of the seven proposed viticultural areas discussed in this notice, the petition states.

Sloughhouse

The proposed Sloughhouse viticultural area is located in southern Sacramento County, approximately 21 miles southeast of the city of Sacramento and 22 miles north of the city of Lodi. Located in the northeastern portion of the existing Lodi viticultural area, approximately 7,000 acres within the 78,800-acre proposed Sloughhouse viticultural area are currently planted to grapes, according to the petition.

The petition states that warmer temperatures, more rain, less fog, higher elevations, and older soils distinguish the proposed Sloughhouse viticultural area from the other proposed viticultural areas discussed in this notice. The proposed Sloughhouse viticultural area, which is also adjacent to the established Sierra Foothills viticultural area (27 CFR 9.120), has rolling plains and hilly terrain that transitions to the Sierra Foothills further east, according to the petition.

Below, we summarize the evidence presented in the Sloughhouse petition.

Name Evidence

The Sacramento Bee newspaper published an article on January 19, 1998, detailing the history of the Sloughhouse region. In the 1850's the Sloughhouse Inn, which gave the region its name, was a popular stagecoach stop. According to the article, the building, rebuilt several times after fires, is a registered California historical landmark. Today, the Sloughhouse Inn is a restaurant. Modern usage of the Sloughhouse name, according to petition evidence, is also seen in the names of the Sloughhouse Resource Conservation District, the Sloughhouse Fire Protection District, and the Sloughhouse Area Genealogical Society.

The USGS Geographic Names Information System (GNIS) database lists ''Sloughhouse'' as a populated place in Sacramento County, California. The USGS Sloughhouse quadrangle map shows the hamlet of Sloughhouse along State Road 16 on the Township 7 and 8 North line, between Ranges 6 and 7 East. Sloughhouse Road, a secondary road, is shown on the USGS Elk Grove and Sloughhouse maps within the proposed viticultural area boundary lines.

Boundary Evidence

Warmer temperatures, less intense winds, more rainfall, and greater climatic variations distinguish the proposed Sloughhouse viticultural area from the surrounding areas within the Lodi region according to the petition. It adds that elevations within the proposed Sloughhouse viticultural area are generally higher and the soils older than the other surrounding proposed viticultural areas. The distinguishing Sloughhouse terrain and climatic characteristics, the petition explains, make this proposed viticultural area significantly different from the surrounding areas. Red varietals, including Cabernet Sauvignon, Cabernet Franc, Merlot, and Zinfandel, are popular in the Sloughhouse area as they can withstand drought and other climatic variations, the petition states.

The proposed Sloughhouse area's outer boundaries follow a portion of the existing Lodi viticultural area northern and eastern boundary lines, and the proposed area abuts the established Sierra Foothills viticultural area western boundary line. The petition explains that the shared Lodi and Sierra Foothills viticultural areas boundary line, which coincides with the Amador County line, is the logical division between the valley and mountain environments.

Distinguishing Features

Topography

The proposed Sloughhouse viticultural area, the petition states, has the most diverse terrain of the seven proposed viticultural areas discussed in this notice. Gently rolling hills, flat creek and river valleys, plains, and an alluvial fan characterize the proposed viticultural area, according to the petition.

The proposed Sloughhouse viticultural area ranges in elevation from a low of 73 feet in its southwest region to a high of 590 feet in its northeast region, according to the provided USGS maps. The northeast region of Sloughhouse, which has the highest elevations in the proposed area, slopes upward and becomes the bedrock-based foothills of the Sierra Range, the petition notes. These higher elevations are similar to Borden Ranch to the south, but contrast with the proposed Alta Mesa viticultural area to the west with its lower elevations of between 35 and 138 feet.

Three significant waterways, the Cosumnes River and its Deer Creek and Laguna tributaries flow west from the Sierra Foothills through the proposed Sloughhouse viticultural area. Deer Creek constitutes the northeastern boundary line of the proposed viticultural area, as noted in the petition's boundary description. Deer Creek, according to USGS maps, then meanders southwesterly through the interior of the proposed Sloughhouse area. The Cosumnes River runs roughly parallel to Deer Creek and through the approximate middle of the proposed Sloughhouse viticultural area. Deer Creek eventually joins the Cosumnes River to the west of the proposed viticultural area. The Laguna forms the south boundary line for the proposed Sloughhouse viticultural area and joins the Cosumnes River and Deer Creek to the west of the proposed area.

Soils

The petition notes that the predominant soils in the western portion of the proposed Sloughhouse viticultural area are found on an older alluvial fan. Classified as Durixeralfs and Haploxeralfs, the soils series found there include a complex of Redding, Corning, Pentz, and Hadlesville soils, which are generally of low vigor. Older soils, including patches of significantly older soils, are found in the higher eastern elevations of the proposed viticultural area. These older soils formed from sedimentary, metamorphic, and volcanic rock, including Sierra basement granite. Also, the Cosumnes River, Deer Creek, and the Laguna have left older river deposits within the proposed Sloughhouse viticultural area, according to the petition.

Climate

The petition uses statistics and data from the Lodi, Sacramento and especially the Folsom weather stations, located close to the proposed Sloughhouse viticultural area. The petition explains that the proposed Sloughhouse viticultural area has a climate distinguishable from the surrounding proposed viticultural areas due to its combination of warm growing season temperatures and heavy winter rains.

The Sloughhouse area, at 61.6 mean annual degrees Fahrenheit, is the warmest of the seven proposed viticultural areas within the established Lodi viticultural area, the petition states. The average growing season degree-day total of the Sloughhouse area, according to the petition, is more than 200 total degree days higher than the Alta Mesa area to the immediate west and 300 total degree days higher than the cooler Borden Ranch and Clements Hills areas to the south.

The proposed Sloughhouse viticultural area, the petition claims, has little marine sea breeze influence as compared to other proposed viticultural areas to the west, which are closer to the Sacramento Delta. Also, the Alta Mesa ''table-top'' landform, to the immediate west, acts as a buffer between the west-to-east marine breezes and the proposed Sloughhouse area.

The proposed Sloughhouse viticultural area receives more rain, 23-inches annually according to petition documentation, than the other proposed viticultural areas discussed in this notice. The petition states that to the west of the proposed Sloughhouse area, the proposed Alta Mesa viticultural area averages 18.5 inches annual rainfall, and, to the south, the proposed Borden Ranch viticultural area averages 20 inches annual rainfall. Also, other proposed viticultural areas discussed in this notice average as low as 14 inches of annual rainfall, the petition notes.

In addition, fog is less frequent in the proposed Sloughhouse viticultural area than in the adjacent lower elevation and cooler proposed Alta Mesa viticultural area to the west, the petition states. The upland environment, with less cooling marine influence and warmer temperatures, discourages the formation of fog.

Boundary Description

See the narrative boundary descriptions of the seven petitioned-for viticultural areas in the proposed regulatory texts published at the end of this notice.

Maps

The petitioner provided the required maps for the proposed seven viticultural areas, and we list them below in the appropriate proposed regulatory texts below.

Impact on Current Wine Labels

Part 4 of the TTB regulations prohibits any label reference on a wine that indicates or implies an origin other than the wine's true place of origin. If we establish the proposed ''Jahant'' or ''Sloughhouse'' viticultural areas, the name in question will be recognized as a name of viticultural significance. If we establish the proposed ''Alta Mesa,'' ''Borden Ranch,'' or ''Clements Hills,'' viticultural areas, the full name of the viticultural area in question will be recognized as a name of viticultural significance. On the other hand, we do not believe that any single part of these three proposed viticultural area names standing alone, such as ''Mesa,'' ''Borden,'' or ''Clements'' would have viticultural significance if we establish the viticultural area in question.

If we establish the proposed ''Cosumnes River'' or ''Mokelumne River'' viticultural areas, the full name of the viticultural area in question will be recognized as a name of viticultural significance. In addition, with the establishment of the Cosumnes River or Mokelumne River viticultural areas, the name ''Cosumnes'' or the name ''Mokelumne'' standing alone will be considered a term of viticultural significance because consumers and vintners could reasonably attribute the quality, reputation, or other characteristic of wine made from grapes grown in the proposed Cosumnes River or Mokelumne River viticultural area to the name Cosumnes or the name Mokelumne itself.

We note in this regard that a review of the information contained in the Geographic Names Information System maintained by the USGS, and a general search of relevant Internet Web sites reveal that the ''Cosumnes'' and ''Mokelumne'' names are not used in a variety of different geographic contexts throughout the United States but rather appear to apply in particular to the respective regions in California encompassed by the two proposed viticultural areas. See 27 CFR 4.39(i)(3), which also provides that a name has viticultural significance when determined by a TTB officer.

Therefore, the seven proposed 27 CFR part 9 section texts set forth in this notice specify, respectively, that ''Alta Mesa,'' ''Borden Ranch,'' ''Clements Hills,'' ''Cosumnes River'' and ''Cosumnes'' standing alone, ''Jahant,'' ''Mokelumne River'' and ''Mokelumne'' standing alone, and ''Sloughhouse'' are terms of viticultural significance for purposes of part 4 of the TTB regulations. Consequently, wine bottlers using any of those terms in a brand

name, including a trademark, or in another label reference as to the origin of the wine, will have to ensure that the product is eligible to use the name of the viticultural area in question as an appellation of origin.

For a wine to be eligible to use as an appellation of origin, a viticultural area name or term specified as being viticulturally significant in part 9 of the TTB regulations, at least 85 percent of the grapes used to make the wine must have been grown within the area represented by that name or other term, and the wine must meet the other conditions listed in 27 CFR 4.25(e)(3). If the wine is not eligible to use as an appellation of origin, a viticultural area name or other viticulturally significant term that appears in the brand name, then the label is not in compliance and the bottler must change the brand name and obtain approval of a new label. Similarly, if the viticultural area name or other viticulturally significant term appears in another reference on the label in a misleading manner, the bottler would have to obtain approval of a new label. Accordingly, if a new label or a previously approved label uses one of the viticultural area names or other viticulturally significant terms identified above for a wine that does not meet the 85 percent standard, the new label will not be approved, and the previously approved label will be subject to revocation, once the viticultural area in question is approved.

Different rules apply if a wine has a brand name containing a viticultural area name that was used as a brand name on a label approved before July 7, 1986. See 27 CFR 4.39(i)(2) for details.

We also note that the establishment of any or all of these seven proposed viticultural areas will not affect the established Lodi viticultural area or approved labels using the ''Lodi'' name.

Public Participation

Comments Invited

We invite comments from interested members of the public on whether we should establish any or all of the seven proposed viticultural areas within the existing Lodi viticultural area. We are also interested in receiving comments on the sufficiency and accuracy of the names, climactic, boundary, and other required information submitted in support of the petitions. Please provide any available specific information in support of your comments. Also, please identify the specific proposed viticultural area or areas that your comments concern.

Because of the potential impact of the establishment of the seven proposed viticultural areas on brand labels that include the words ''Alta Mesa,'' ''Borden Ranch,'' ''Clements Hills,'' ''Cosumnes River'' (or ''Cosumnes'' alone), ''Jahant,'' ''Mokelumne River'' (or ''Mokelumne'' alone), or ''Sloughhouse,'' as discussed above under Impact on Current Wine Labels, we are particularly interested in comments regarding whether there will be a conflict between any of the proposed areas names and currently used brand names. If a commenter believes that a conflict will arise, the comment should describe the nature of that conflict, including any negative economic impact that approval of the proposed viticultural area in question will have on an existing viticultural enterprise. We are also interested in receiving suggestions for ways to avoid any conflicts, for example, by adopting modified or different names for the viticultural area.

Submitting Comments

Please submit your comments by the closing date shown above in this notice. Your comments must include this notice number and your name and mailing address. In addition, please identify the specific proposed viticultural area or areas that your comments concern. Your comments must be legible and written in language acceptable for public disclosure. We do not acknowledge receipt of comments, and we consider all comments as originals. You may submit comments in one of five ways:

- *Mail:* You may send written comments to TTB at the address listed in the **ADDRESSES** section.
- *Facsimile:* You may submit comments by facsimile transmission to 202–927–8525. Faxed comments must—
  (1) Be on 8.5- by 11-inch paper;
  (2) Contain a legible, written signature; and
  (3) Be no more than five pages long. This limitation assures electronic access to our equipment. We will not accept faxed comments that exceed five pages.
- *E-mail:* You may e-mail comments to *nprm@ttb.gov.* Comments transmitted by electronic mail must—
  (1) Contain your e-mail address;
  (2) Reference this notice number on the subject line; and
  (3) Be legible when printed on 8.5- by 11-inch paper.
- *Online form:* We provide a comment form with the online copy of this notice on our Web site at *http://www.ttb.gov/alcohol/rules/index.htm.* Select the ''Send comments via e-mail'' link under this notice number.
- *Federal e-Rulemaking Portal:* To submit comments to us via the Federal e-rulemaking portal, visit *http://www.regulations.gov* and follow the instructions for submitting comments.

You may also write to the Administrator before the comment closing date to ask for a public hearing. The Administrator reserves the right to determine, in light of all circumstances, whether to hold a public hearing.

Confidentiality

All submitted material is part of the public record and subject to disclosure. Do not enclose any material in your comments that you consider confidential or inappropriate for public disclosure.

Public Disclosure

You may view copies of this notice, the petition, the appropriate maps, and any comments we receive by appointment at the TTB Library at 1310 G Street, NW., Washington, DC 20220. You may also obtain copies at 20 cents per 8.5- × 11-inch page. Contact our librarian at the above address or by telephone at 202–927–2400 to schedule an appointment or to request copies of comments.

For your convenience, we will post this notice and any comments we receive on this proposal on the TTB Web site. We may omit voluminous attachments or material that we consider unsuitable for posting. In all cases, the full comment will be available in the TTB Library. To access the online copy of this notice and any submitted comments, visit *http://www.ttb.gov/alcohol/rules/index.htm.* Select the ''View Comments'' link under this notice number to view the posted comments.

Regulatory Flexibility Act

We certify that this proposed regulation, if adopted, would not have a significant economic impact on a substantial number of small entities. The proposed regulation imposes no new reporting, recordkeeping, or other administrative requirement. Any benefit derived from the use of a viticultural area name would be the result of a proprietor's efforts and consumer acceptance of wines from that area. Therefore, no regulatory flexibility analysis is required.

Executive Order 12866

This proposed rule is not a significant regulatory action as defined by Executive Order 12866, 58 FR 51735. Therefore, it requires no regulatory assessment.

Drafting Information

N. A. Sutton and M.D. Hoover of the Regulations and Procedures Division drafted this notice.

List of Subjects in 27 CFR Part 9

Wine.

Proposed Regulatory Amendment

For the reasons discussed in the preamble, we propose to amend 27 CFR, chapter I, part 9, as follows:

PART 9—AMERICAN VITICULTURAL AREAS

1. The authority citation for part 9 continues to read as follows:

Authority: 27 U.S.C. 205.

2. Amend subpart C by adding § 9.____ through § 9.____ to read as follows:

Subpart C—American Viticultural Areas

§ 9.____ Alta Mesa.

(a) *Name.* The name of the viticultural area described in this section is ''Alta Mesa''. For purposes of part 4 of this chapter, ''Alta Mesa'' is a term of viticultural significance.

(b) *Approved maps.* The seven USGS, 1:24,000 scale, topographic quadrangle maps used to determine the boundaries of the Alta Mesa viticultural area are titled—

(1) North Lodi, Calif., 1968, photorevised 1976;

(2) Galt, Calif., 1968, photorevised 1980;

(3) Florin, Calif., 1968, photorevised 1980;

(4) Elk Grove, Calif., 1968, photorevised 1979;

(5) Sloughhouse, Calif., 1968, photorevised 1980, minor revision 1993;

(6) Clay, Calif., 1968, photorevised 1980, minor revision 1993; and

(7) Lockeford, Calif., 1968, photorevised 1979, minor revision 1993.

(c) *Boundary.* The Alta Mesa viticultural area is located in Sacramento County, California, and is entirely within the Lodi viticultural area (27 CFR 9.107). The Alta Mesa viticultural area boundary is as follows:

(1) The beginning point is on the Lodi North map at the intersection of Kost Road and the Southern Pacific railway, section 34, T5N, R6E. From this point, proceed north-northwest 8.7 miles along the Southern Pacific railway to its intersection with State Route 99 at McConnel, section 20, T6N, R6E (Galt Quadrangle), then

(2) Proceed northwest 4.7 miles on State Route 99 to its intersection with Sheldon Road at the northern boundary of section 26, T7N, R5E (Florin Quadrangle); then

(3) Proceed east 5.2 miles on Sheldon Road to its intersection with the Central California Traction railroad at the northern boundary of section 27, T7N, R6E (Elk Grove Quadrangle); then

(4) Proceed southeast 3.85 miles along the Central California Traction railroad to Grant Line Road, then southwest on Grant Line Road to Wilton Road at the hamlet of Sheldon, and then continue southeast on Wilton Road to its intersection with Dillard Road, section 6, T6N, R7E (Elk Grove Quadrangle); then

(5) Proceed northeast 2.6 miles on Dillard Road to its intersection with Lee Shorthorn Road, T7N, R7E (Sloughhouse Quadrangle); then

(6) Proceed southeast 0.9 mile on Lee Shorthorn Road to its intersection with Tavernor Road, T7N, R7E (Sloughhouse Quadrangle); then

(7) Proceed south 0.95 mile on Tavernor Road to its first 90 degree turn to the west (where two unimproved roads join Tavernor Road from the east and south), section 4, T6N, R7E (Sloughhouse Quadrangle); then

(8) Continue due south 1 mile in a straight line to the line's intersection with the 105-foot contour line and an unimproved extension of Blake Road, section 9, T6N, R7E (Sloughhouse Quadrangle);

(9) Proceed west 0.3 mile on the unimproved extension of Blake Road to its intersection with Tavernor Road, section 9, T6N, R7E (Sloughhouse Quadrangle); then

(10) Proceed south 0.7 mile on Tavernor Road to the center of the loop at the end of the road, section 16, T6N, R7E (Sloughhouse Quadrangle); then

(11) Proceed southwest in a straight line for 0.1 mile to the line's intersection with the east end of the landing strip shown in the northwest quadrant of section 16, T6N, R7E (Sloughhouse Quadrangle); then

(12) Proceed west along the landing strip and a line extending from its western end to the line's intersection with Alta Mesa Road on the eastern boundary of section 17, T6N, R7E (Sloughhouse Quadrangle); then

(13) Proceed south 6.1 miles on Alta Mesa Road, crossing State Route 104, to Alta Mesa Road's intersection with Borden Road at the southwest corner of section 9, T5N, R7E (Clay Quadrangle); then

(14) Proceed east 1 mile on Borden Road to its intersection with Alabama Road at the southeast corner of section 9, T5N, R7E (Clay Quadrangle); then

(15) Proceed south 2 miles on Alabama Road to its intersection with Simmerhorn Road at the southeast corner of section 21, T5N, R7E (Clay Quadrangle); then

(16) Proceed east 2 miles on Simmerhorn Road to its intersection with Clay Station Road at the northeast corner of section 26, T5N, R7E (Clay Quadrangle); then

(17) Proceed south 0.5 mile on Clay Station Road to its intersection with Dry Creek, section 26, T5N, R7E (Clay Quadrangle); then

(18) Proceed west-southwest (downstream) 7.8 miles along Dry Creek, crossing over the northwest corner of the Lockeford map, and twice crossing over the southeast corner of the Galt map, to Dry Creek's intersection with Lincoln Way, section 35, T5N, R6E (Lodi North Quadrangle); then

(19) Proceed northwest 0.1 mile on Lincoln Way to its intersection with Kost Road, section 35, T5N, R6E (Lodi North Quadrangle); and

(20) Proceed west 0.3 mile on Kost Road and return to the beginning point at the intersection of Kost Road and the Southern Pacific railway, returning to the beginning point.

§ 9.____ Borden Ranch.

(a) *Name.* The name of the viticultural area described in this section is ''Borden Ranch''. For purposes of part 4 of this chapter, ''Borden Ranch'' is a term of viticultural significance.

(b) *Approved maps.* The six USGS, 1:24,000 scale, topographic quadrangle maps used to determine the boundaries of the Borden Ranch viticultural area are titled—

(1) Lockeford, Calif., 1968, photorevised 1979, minor revision 1993;

(2) Clay, Calif., 1968, photorevised 1980, minor revision 1993;

(3) Sloughhouse, Calif., 1968, photorevised 1980, minor revision 1993;

(4) Carbondale, Calif., 1968, photorevised 1980, minor revision 1993;

(5) Goose Creek, Calif., 1968, photorevised 1980, minor revision 1993; and

(6) Clements, Calif., 1968, minor revision 1993.

(c) *Boundary.* The Borden Ranch viticultural area is located in Sacramento and San Joaquin Counties, California, and is entirely within the Lodi viticultural area (27 CFR 9.107). The Borden Ranch viticultural area boundary is as follows:

(1) The beginning point is on the Lockeford map at the intersection of Liberty Road and Elliott Road at the southwest corner of section 36, T5N, R7E. From the beginning point, proceed north 2 miles on Elliot Road, which becomes Clay Station Road upon crossing the Sacramento-San Joaquin

County line at Dry Creek, to Clay Station Road's intersection with Simmerhorn Road, at the southeast corner of section 23, T5N, R7E (Clay Quadrangle); then

(2) Proceed west 2 miles on Simmerhorn Road to its intersection with Alabama Road at the southwest corner of section 22, T5N, R7E (Clay Quadrangle); then

(3) Proceed north 2 miles on Alabama Road to its intersection with Borden Road at the northwest corner of section 15, T5N, R7E (Clay Quadrangle); then

(4) Proceed west 1 mile on Borden Road to its intersection with Alta Mesa Road at the southwest corner of section 9, T5N, R7E (Clay Quadrangle); then

(5) Proceed north 1.35 miles on Alta Mesa Road, crossing State Route 104, to Alta Mesa Road's intersection with the Laguna tributary along the western boundary line of section 4, T5N, R7E (Clay Quadrangle); then

(6) Proceed easterly (upstream) about 16.5 miles along the meandering Laguna tributary, crossing over the southeast corner of the Sloughhouse map, to the Laguna's intersection with the Sacramento-Amador County line, 0.75 mile south of the Ione Road, T6N, R9E (Carbondale Quadrangle); then

(7) Proceed south and then southeast about 10.8 miles along the Sacramento-Amador and Sacramento-San Joaquin County lines, crossing over the Goose Creek map, to the County line's intersection with Liberty Road, section 32, T5N, R9E (Clements Quadrangle); and

(8) Proceed west about 9.3 miles west along Liberty Road to its intersection with Elliott Road, returning to the beginning point.

§ 9.____ Clements Hills.

(a) *Name.* The name of the viticultural area described in this section is ''Clements Hills''. For purposes of part 4 of this chapter, ''Clements Hills'' is a term of viticultural significance.

(b) *Approved maps.* The six USGS 1:24,000 scale, topographic quadrangle maps used to determine the boundaries of the Clements Hills viticultural area are titled—

(1) Waterloo, Calif., 1968, photoinspected 1978;

(2) Lockeford, Calif., 1968, photorevised 1979, minor revision 1993;

(3) Clements, Calif., 1968, minor revision 1993;

(4) Wallace, Calif., 1962;

(5) Valley Springs SW., Calif., 1962, photoinspected 1973; and

(6) Linden, Calif., 1968, minor revision 1993.

(c) *Boundary.* The Clements Hills viticultural area is located in San Joaquin County, California, and is entirely within the Lodi viticultural area (27 CFR 9.107). The Clements Hills viticultural areas boundary is as follows—

(1) The beginning point is on the Waterloo map at the intersection of the Calaveras River and Jack Tone Road, section 31 west boundary line, T3N, R8E. From that point, proceed north 6.9 miles on Jack Tone Road to its intersection with Elliot Road in the village of Lockeford (where Jack Tone Road is known as E. Hammond Street for a short distance), section 30, T4N, R8E (Lockeford Quadrangle); then

(2) Proceed northwest 5.4 miles on Elliott Road, crossing the Mokelumne River, to Elliott Road's intersection with Liberty Road at the northwest corner of section 1, T4N, R7E, (Lockeford Quadrangle); then

(3) Proceed east 9.3 miles on Liberty Road to its junction with the San Joaquin-Amador County line, north of the Camanche Reservoir, section 32, T5N, R9E (Clements Quadrangle); then

(4) Proceed south-southeast 13 miles along the San Joaquin-Amador and San Joaquin-Calaveras County lines, crossing over the Wallace map, to the County line's intersection with the Calaveras River, section 31, T3N, R10E (Valley Springs SW. Quadrangle); and

(5) Proceed southwest (downstream) 14.2 miles along the Calaveras River, crossing over the Linden map, to the river's intersection with Jack Tone Road, returning to the beginning point.

§ 9.____ Cosumnes River.

(a) *Name.* The name of the viticultural area described in this section is ''Cosumnes River''. For purposes of part 4 of this chapter, ''Cosumnes River'' and ''Cosumnes'' are terms of viticultural significance.

(b) *Approved maps.* The six USGS, 1:24,000 scale, topographic quadrangle maps used to determine the boundaries of the Cosumnes River viticultural area are titled—

(1) Bruceville, Calif., 1968, photorevised 1980;

(2) Florin, Calif., 1968, photorevised 1980;

(3) Elk Grove, Calif., 1968, photorevised 1979;

(4) Galt, Calif., 1968, photorevised 1980;

(5) Lodi North, Calif., 1968, photorevised 1976; and

(6) Thornton, Calif., 1978.

(c) *Boundary.* The Cosumnes River viticultural area is located in Sacramento County, California, and is entirely within the Lodi viticultural area (27 CFR 9.107). The Cosumnes River viticultural area boundary is as follows—

(1) The beginning point is on the Bruceville map at the intersection of the Mokelumne River and Interstate Highway 5, T5N, R5E. From that point, north 8.5 miles along Interstate 5 to its intersection with an unnamed light duty road, locally known to the west of Franklin as Hood-Franklin Road, section 18, T6N, R5E (Florin Quadrangle); then

(2) Proceed east 1.2 miles straight on Hood-Franklin Road to its intersection with Franklin Boulevard in the village of Franklin, section 17, T6N, R5E (Florin Quadrangle); then

(3) Proceed north 4.3 miles on Franklin Boulevard to its intersection with Sims Road on the west and Sheldon Road to the east at the northwest corner of section 28, T7N, R5E (Florin Quadrangle); then

(4) Proceed east 2.4 miles on Sheldon Road to its intersection with State Route 99 at the northern boundary section 26, T7N, R5E (Florin Quadrangle); then

(5) Then proceed south-southeast 6 miles on State Route 99, crossing over the Elk Grove map, to the road's intersection with the Southern Pacific railway line at McConnell, section 20, T6N, R6E (Galt Quadrangle); then

(6) Proceed south-southeast 8.7 miles along the Southern Pacific railway line to its intersection with Kost Road, section 34, T5N, R6E (Lodi North Quadrangle); then

(7) Proceed west and then north 3.8 miles on Kost Road to its intersection with New Hope Road, T5N, R6E (Lodi North Quadrangle); then

(8) Proceed west then south 2.8 miles on New Hope Road to its intersection with the Mokelumne River and the Sacramento-San Joaquin County line, T5N, R5E (Thornton Quadrangle); and

(9) Proceed northerly then westerly (downstream) for about 2.7 miles along the meandering Mokelumne River to its intersection with Interstate 5, returning to the beginning point.

§ 9.____ Jahant.

(a) *Name.* The name of the viticultural area described in this section is ''Jahant''. For purposes of part 4 of this chapter, ''Jahant'' is a term of viticultural significance.

(b) *Approved maps.* The five USGS, 1:24000 scale, topographic quadrangle maps used to determine the boundaries of the Jahant viticultural area are titled—

(1) Lodi North, Calif., 1968, photorevised 1976;

(2) Thornton, Calif., 1978;

(3) Galt, Calif., 1968, photorevised 1980;

(4) Lockeford, Calif., 1968, photorevised 1979; and

(5) Clay, Calif., 1968, photorevised 1980, minor revision 1993.

(c) *Boundary.* The Jahant viticultural area is located in Sacramento and San Joaquin Counties, California, and is entirely with the Lodi viticultural area (27 CFR 9.107). The Jahant viticultural area boundary is as follows—

(1) The beginning point is on the Lodi North map at the intersection of Peltier Road and the Mokelumne River, section 16 south boundary line, T4N, R6E. From the beginning point, proceed westerly (downstream) 6.7 miles along the Mokelumne River to its intersection with New Hope Road, about 0.7 mile north of the village of Thornton, T5N, R5E (Thornton Quadrangle); then

(2) Proceed north then east for 3 miles on New Hope Road to its intersection with Kost Road, T5N, R6E (Lodi North Quadrangle); then

(3) Proceed south then east for 4.1 miles on Kost Road to its intersection with Lincoln Way, section 35, T5N, R6E (Lodi North Quadrangle); then

(4) Proceed southeast 0.15 mile on Lincoln Way to its intersection with Dry Creek, section 35, T5N, R6E (Lodi North Quadrangle); then

(5) Proceed easterly (upstream) 7 miles along Dry Creek, crossing twice over and back at the southeast corner of the Galt map, and then crossing over the northwest corner of the Lockeford map, to Dry Creek's intersection with Elliott Road, section 26, T5N, R7E (Clay Quadrangle); then

(6) Proceed south 4.5 miles on Elliott Road to its intersection with Peltier Road at the southeast corner of section 14, T4N, R7E (Lockeford Quadrangle); and

(7) Proceed west 8.3 miles on Peltier Road to its intersection with the Mokelumne River, returning to the beginning point.

§ 9.____ Mokelumne River.

(a) *Name.* The name of the viticultural area described in this section is ''Mokelumne River''. For purposes of part 4 of this chapter, ''Mokelumne River'' and ''Mokelumne'' are terms of viticultural significance.

(b) *Approved maps.* The seven USGS, 1:24,000 scale, topographic quadrangle maps used to determine the boundaries of the Mokelumne River viticultural area are titled—

(1) Lodi South, Calif., 1968, photorevised 1976;

(2) Terminous, Calif., 1978, minor revision 1993;

(3) Thornton, Calif., 1978;

(4) Bruceville, Calif., 1968, photorevised 1980;

(5) Lodi North, Calif., 1968, photorevised 1976;

(6) Lockeford, Calif., 1968, photorevised 1979, minor revision 1993; and

(7) Waterloo, Calif., edition of 1968, photoinspected 1978.

(c) *Boundary.* The Mokelumne River viticultural area is located in San Joaquin County, California, and is entirely within the Lodi viticultural area (27 CFR 9.107). The Mokelumne River viticultural area boundary is as follows—

(1) The beginning point is on the Lodi South map at the intersection of Eightmile Road and Interstate 5, section 36 south boundary line, T3N, R5E. From the beginning point, proceed north-northwest 14.7 miles on Interstate 5, crossing over the Terminous and Thornton maps, to the Interstate's intersection with the Mokelumne River, T5N, R6E (Bruceville Quadrangle); then

(2) Proceed southeast (upstream) 5 miles along the meandering Mokelumne River to its intersection with Peltier Road, section 16, T4N, R6E (Lodi North Quadrangle); then

(3) Proceed east 8.3 miles along Peltier Road to its intersection with Elliott Road at the northeast corner of section 23, T4N, R7E (Lockeford Quadrangle); then

(4) Proceed south then southeast 2.3 miles on Elliott Road to its intersection with Jack Tone Road in the village of Lockeford (where Jack Tone Road is known as E. Hammond Street for a short distance), section 30, T4N, R8E (Lockeford Quadrangle); then

(5) Proceed south 6.7 miles on Jack Tone Road to its intersection with the Calaveras River, section 36 east boundary line, T3N, R7E (Waterloo Quadrangle); then

(6) Proceed southwesterly (downstream) 0.9 mile along the meandering Calaveras River to its intersection with Eightmile Road, section 36 south boundary line, T3N, R7E (Waterloo Quadrangle); and

(7) Proceed west 8.6 miles on Eightmile Road to its intersection with Interstate 5, returning to the beginning point.

§ 9.____ Sloughhouse.

(a) *Name.* The name of the viticultural area described in this section is ''Sloughhouse''. For purposes of part 4 of this chapter, ''Sloughhouse'' is a term of viticultural significance.

(b) *Approved maps.* The six USGS, 1:24,000 scale, topographic quadrangle maps used to determine the boundaries of the Sloughhouse viticultural area are titled—

(1) Clay, Calif., 1968, photorevised 1980, minor revision 1993;

(2) Sloughhouse, Calif., 1968, photorevised 1980, minor revision 1993;

(3) Elk Grove, Calif., 1968, photorevised 1979;

(4) Buffalo Creek, Calif., 1967, photorevised 1980;

(5) Folsom SE, Calif., 1954, photorevised 1980; and

(6) Carbondale, Calif., 1968, photorevised 1980, minor revision 1993.

(c) *Boundary.* The Sloughhouse viticultural area is located in Sacramento County, California, and is entirely within the Lodi viticultural area (27 CFR 9.107). The Sloughhouse viticultural area boundary is as follows—

(1) The beginning point is on the Clay map at the intersection of the Laguna estuary and Alta Mesa Road, on the western boundary of section 4, T5N, R7E. From the beginning point, proceed north 4.8 miles on Alta Mesa Road to the road's intersection with a line drawn due west from the western end of the landing strip shown in the northwestern quadrant of section 16, T6N, R7E (Sloughhouse Quadrangle); then

(2) Proceed east 0.5 mile east to the eastern end of the landing strip, section 16, T6N, R7E (Sloughhouse Quadrangle); then

(3) Proceed northeast in a straight line 0.1 mile to the center of the loop at the south end of Tavernor Road, section 16, T6N, R7E (Sloughhouse Quadrangle); then

(4) Proceed north 0.75 mile on Tavernor Road to its intersection with Blake Road, section 9, T6N, R7E (Sloughhouse Quadrangle); then

(5) Proceed east 0.5 mile on the unimproved extension of Blake Road to its intersection with the 105-foot elevation line, section 9, T6N, R7E (Sloughhouse Quadrangle); then

(6) Proceed due north about 0.85 mile to the 90 degree turn in Tavernor Road and continue north about 0.9 mile on Tavernor Road to its intersection with Lee Shorthorn Road, T7N, R7E, (Sloughhouse Quadrangle); then

(7) Proceed northwest 0.9 mile on Lee Shorthorn Road to intersection with Dillard Road, T7N, R7E (Sloughhouse Quadrangle); then

(8) Proceed southwest about 2.6 miles on Dillard Road to its intersection with Wilton Road at the hamlet of Dillard, section 6, T6N, R7E (Elk Grove Quadrangle); then

(9) Proceed northwest 3.1 miles on Wilton Road to its intersection with Grant Line Road at the hamlet of Sheldon, section 27, T7N, R6E (Elk Grove Quadrangle); then

(10) Proceed northwest on Grant Line Road to its intersection with State Route 16 (Jackson Road), section 33, T8N, R7E (Buffalo Creek Quadrangle); then

(11) Proceed east-southeast 1.6 miles on State Route 16 to its intersection with Deer Creek at BM 108 near

Sloughhouse, T8N, R7E (Sloughhouse Quadrangle); then

(12) Proceed northeasterly (upstream) about 11 miles along the meandering Deer Creek, crossing over the southeast corner of the Buffalo Creek map, to the creek's intersection with the Sacramento-El Dorado County line, section 1, T8N, R8E (Folsom, S.E. Quadrangle); then

(13) Proceed south-southeast followed by south for about 12.4 miles along the Sacramento-El Dorado and Sacramento-Amador County line to the County line's intersection with the Laguna estuary, 0.75 mile south of the Ione Road, T6N, R9E (Carbondale Quadrangle); and

(14) Proceed westerly (downstream) 17.5 miles along the meandering Laguna, crossing over the Sloughhouse map, returning to the beginning point at the intersection of the Laguna estuary and Alta Mesa Road, section 4, T5N, R7E. (Clay Quadrangle).

Signed: July 22, 2005.

John J. Manfreda,

Administrator.

[FR Doc. 05–16132 Filed 8–12–05; 8:45 am]

BILLING CODE 4810–31–P

POSTAL SERVICE

39 CFR Part 111

New Standards for Periodicals Mail Prepared in Sacks

AGENCY: Postal Service.

ACTION: Proposed rule.

SUMMARY: We are proposing new standards to reduce handling costs for Periodicals mail prepared in sacks. Our proposal includes the following changes: two new types of sacks: a 3-digit carrier routes sack and a merged 3-digit sack; and a new minimum of 24 pieces for most other sacks.

DATES: We are proposing to make these changes on March 1, 2006. We must receive your comments on or before September 14, 2005.

ADDRESSES: Mail or deliver written comments to the Manager, Mailing Standards, U.S. Postal Service, 475 L'Enfant Plaza, SW., Room 3436, Washington, DC 20260–3436. You may inspect and photocopy all written comments at USPS Headquarters Library, 475 L'Enfant Plaza, SW., 11th Floor N, Washington, DC between 9 a.m. and 4 p.m., Monday through Friday.

FOR FURTHER INFORMATION CONTACT: Joel Walker, 202–268–7266.

SUPPLEMENTARY INFORMATION: The Postal Service and the Periodicals mailing industry are working together to control costs. We can reduce the costs of transporting and processing mail in sacks by requiring more pieces in most sacks of Periodicals mail and by adding two new types of sacks: a 3-digit carrier routes sack and a merged 3-digit sack. We are creating these new sacks to eliminate 5-digit sacks with fewer than 24 pieces while preserving carrier route rate eligibility.

New 3-Digit Carrier Routes Sack for Carrier Route Mailings

This sack contains pieces sorted to carrier routes in a 3-digit area, consolidating the bundles formerly prepared in 5-digit carrier routes sacks containing fewer than 24 pieces.

- This sack must contain a minimum of one six-piece carrier route bundle.
- This sack may contain additional carrier route bundles of fewer than six pieces when those pieces are paid at the basic rate.

New Merged 3-Digit Sack for Merged Mailings

This sack consolidates carrier route, automation, and presorted bundles formerly prepared in merged 5-digit sacks containing fewer than 24 pieces.

- Mailers must prepare this sack if they have one or more carrier route bundles for the 3-digit area once all carrier route and merged 5-digit sacks containing 24 or more pieces are prepared.
- If a mailing does not include at least one carrier route bundle for the 3-digit area, the merged 3-digit sack must contain a minimum of 24 pieces prepared in 5-digit, 5-digit scheme, 3-digit, and 3-digit scheme bundles.

New 24-Piece Minimum

In addition to the two new types of sacks, we can reduce costs by requiring a minimum of 24 pieces in:

- Carrier route sacks,
- 5-digit carrier routes sacks,
- 5-digit scheme carrier routes sacks,
- 5-digit sacks,
- 5-digit scheme sacks,
- Merged 5-digit sacks,
- Merged 5-digit scheme sacks,
- 3-digit sacks,
- 3-digit scheme sacks,
- SCF sacks, and
- ADC sacks.

The proposed standards and how they are applied for different mail preparation options for Periodicals are provided below. We are proposing to make these changes on March 1, 2006.

Although exempt from the notice and comment requirements of the Administrative Procedure Act (5 U.S.C 410(a)), the Postal Service invites comments on the following proposed revisions to Mailing Standards of the United States Postal Service, Domestic Mail Manual (DMM), incorporated by reference in the Code of Federal Regulations. *See* 39 CFR part 111.

List of Subjects in 39 CFR Part 111

Administrative practice and procedure, Postal Service.

PART 111—[AMENDED]

1. The authority citation for 39 CFR part 111 continues to read as follows:

Authority: 5 U.S.C. 552(a); 39 U.S.C. 101, 401, 403, 404, 414, 3001–3011, 3201–3219, 3403–3406, 3621, 3626, 5001.

2. Revise the following sections of Mailing Standards of the United States Postal Service, Domestic Mail Manual (DMM), as follows:

700 Special Standards

* * * * *

705 Advanced Preparation and Special Postage Payment Systems

* * * * *

9.0 Preparation for Cotraying and Cosacking Bundles of Automation and Presorted Flats

* * * * *

[Revise title in 9.2.4 to read as follows:]

9.2.4 Bundles With Fewer Than Six Pieces (''Low-Volume'' Bundles)

[Revise 9.2.4 by adding a reference to 24 pieces to read as follows:]

5-digit and 3-digit bundles prepared under 707.22.0 and 707.25.0 or under 9.2.3 may contain fewer than six pieces when the publisher determines that such preparation improves service. These ''low-volume'' bundles may be placed in 5-digit, 3-digit, and SCF sacks that contain at least 24 pieces or on 5-digit, 3-digit, or SCF pallets. Pieces in low-volume bundles must claim the applicable basic Presorted or automation rate, except for firm bundles at Presorted rates as applicable under 707.22.3. [M910.2.4]

* * * * *

10.0 Preparation for Merged Containerization of Bundles of Flats Using City State Product

10.1 Periodicals

10.1.1 Basic Standards

* * * * *

[Revise item d by adding a reference to the City State Product to read as follows:]

d. Mailers must use the Carrier Route Indicators field in the City State Product (see 509.1.2) * * *

[Revise title in 10.1.3 to read as follows:]

10.1.3 Bundles With Fewer Than Six Pieces (''Low-Volume'' Bundles)

[Revise 10.1.3 by restructuring the section for clarity and adding references to 24 pieces and merged 3-digit sacks to read as follows:]

Carrier route, 5-digit scheme, 5-digit, 3-digit scheme, and 3-digit bundles may contain fewer than six pieces when the publisher determines that such preparation improves service. Pieces in these ''low-volume'' bundles must be claimed at the basic rate. Low-volume bundles are permitted only when they are sacked or prepared on pallets as follows:

a. Place low-volume carrier route, 5-digit, 3-digit scheme, and 3-digit bundles in only carrier route, merged 5-digit scheme, 5-digit scheme carrier routes, merged 5-digit, 5-digit carrier routes, 5-digit, 3-digit, and SCF sacks that contain at least 24 pieces, or in merged 3-digit sacks that contain at least one six-piece carrier route bundle, or in origin/entry SCF sacks, or on merged 5-digit scheme, 5-digit scheme carrier routes, 5-digit scheme, merged 5-digit, 5-digit carrier routes, 5-digit, 5-digit metro, 3-digit, or SCF pallets, as appropriate.

b. Place low-volume 5-digit scheme bundles in only 5-digit scheme, 3-digit, and SCF sacks that contain at least 24 pieces, or in origin/entry SCF sacks, or on 3-digit or SCF pallets, as appropriate. [M920.1.3]

* * * * *

10.1.4 Sack Preparation and Labeling

[Revise 10.1.4 by adding the reference to 10.1.4h in the introductory paragraph, revising items b through g, adding new item h for merged 3-digit sacks, and revising and renumbering current item h as new item i to read as follows:]

Mailers must prepare sacks containing the individual carrier route and 5-digit bundles from the carrier route, automation rate, and Presorted rate mailings in the mailing job in the following manner and sequence. All carrier route bundles must be placed in sacks under 10.1.4a through 10.1.4e and 10.1.4h as described below.* * *

* * * * *

b. Merged 5–Digit Scheme. Required at 24 pieces. Fewer pieces not permitted. Permitted only when there is at least one 5-digit ZIP Code in the scheme with an ''A'' or ''C'' indicator in the City State Product. May contain carrier route bundles for any 5-digit ZIP Code(s) in a single scheme listed in L001 as well as automation rate 5-digit bundles and Presorted rate 5-digit bundles for those 5-digit ZIP Codes in the scheme that have an ''A'' or ''C'' indicator in the City State Product. For a 5-digit ZIP Code(s) in a scheme that has a ''B'' or ''D'' indicator in the City State Product, prepare sack(s) of automation rate and Presorted rate bundles under 10.1.4g and 10.1.4h. For 5-digit ZIP Codes not included in a scheme, prepare sacks under 10.1.4d through 10.1.4h.

1. Line 1: use L001, Column B.

2. Line 2: ''PER'' or ''NEWS'' as applicable; followed by ''FLTS'' or ''IRREG'' as applicable; followed by ''CR/5D SCH.''

c. 5–Digit Scheme Carrier Routes. Required at 24 pieces. Fewer pieces not permitted. May contain only carrier route bundles for 5-digit ZIP Code(s) in a single scheme listed in L001 when all the 5-digits in the scheme have a ''B'' or ''D'' indicator in the City State Product. Must be prepared if there are any carrier route bundle(s) for such a scheme.

1. Line 1: use L001, Column B.

2. Line 2: ''PER'' or ''NEWS'' as applicable; followed by ''FLTS'' or ''IRREG'' as applicable; followed by ''CR–RTS SCH.''

d. Merged 5–Digit. Required at 24 pieces. Fewer pieces not permitted. Must be prepared only for those 5-digit ZIP Codes that are not part of a scheme and that have an ''A'' or ''C'' indicator in the City State Product. May contain carrier route bundles, automation rate 5-digit bundles, and Presorted rate 5-digit bundles.

1. Line 1: use city, state, and 5-digit ZIP Code destination (see 707.21.1.2 for military mail).

2. Line 2: ''PER'' or ''NEWS'' as applicable; followed by ''FLTS'' or ''IRREG'' as applicable; followed by ''CR/5D.''

e. 5–Digit Carrier Routes. Required at 24 pieces. Fewer pieces not permitted. Sack only carrier route bundles for a 5-digit ZIP Code remaining after preparing sacks under 10.1.4a through 10.1.4d to this level. May contain only carrier route bundles for any 5-digit ZIP Code that is not part of a scheme listed in L001 and that has a ''B'' or ''D'' indicator in the City State Product.

1. Line 1: use city, state, and 5-digit ZIP Code destination (see 707.21.1.2 for military mail).

2. Line 2: ''PER'' or ''NEWS'' as applicable; followed by ''FLTS'' or ''IRREG'' as applicable; followed by ''CR-RTS.''

f. 5–Digit Scheme. Required at 24 pieces. Fewer pieces not permitted. May contain only automation rate and cobundled automation and Presorted rate 5-digit scheme bundles for the same 5-digit scheme destination.

1. Line 1: L007, Column B.

2. Line 2: ''PER'' or ''NEWS'' as applicable; followed by ''FLTS 5D SCH BC.''

g. 5–Digit. Required at 24 pieces. Fewer pieces not permitted. May contain only automation rate 5-digit bundles, Presorted rate 5-digit bundles, and carrier route bundles for the same 5-digit ZIP Code for any 5-digit ZIP Code that has a ''B'' or ''D'' indicator in the City State Product.

1. Line 1: use city, state, and 5-digit ZIP Code destination (see 707.21.1.2 for military mail).

2. Line 2: ''PER'' or ''NEWS'' as applicable; followed by ''FLTS 5D BC/NBC,'' except if there are no automation rate bundles in the mailing job, label under 707.22.6e.

h. Merged 3–Digit. May contain carrier route bundles, any 5-digit and 5-digit scheme bundles remaining after preparing sacks under 10.1.4a through 10.1.4g, and any 3-digit and 3-digit scheme bundles. When preparation of this sack level is permitted, a sack must be prepared if there are any carrier route bundles for the 3-digit area. Required with at least one carrier route bundle. If there is not at least one carrier route bundle for the 3-digit area, the sack must contain a minimum of 24 pieces.

1. Line 1: use L002, Column A.

2. Line 2: ''PER'' or ''NEWS'' as applicable; followed by ''FLTS'' or ''IRREG'' as applicable, followed by ''BC/NBC,'' except if there are no automation rate bundles in the mailing job, label under 707.22.6e.

i. SCF Through Mixed ADC. Any 5-digit scheme and 5-digit bundles remaining after preparing sacks under 10.1.4a through 10.1.4h and all 3-digit, 3-digit scheme, ADC, and mixed ADC bundles must be sacked and labeled according to the applicable requirements under 9.2 for cosacking of automation rate and Presorted rate bundles, except if there are no automation rate bundles in the mailing job, sack and label under 707.22.6, or if there are no Presorted rate bundles in the mailing job, sack and label under 707.25.3. [M920.1.4]

11.0 Preparation of Cobundled Automation Rate and Presorted Rate Flats

* * * * *

11.2 Periodicals

* * * * *

[Revise 11.2.3 to read as follows:]

11.2.3 Bundles With Fewer Than Six Pieces (''Low-Volume'' Bundles)

5-digit scheme, 5-digit, 3-digit scheme, and 3-digit bundles may contain fewer than six pieces when the publisher determines that such preparation improves service. Pieces in these ''low-volume'' bundles must be claimed at the basic rate. Low-volume bundles are permitted only when they are sacked or prepared on pallets as follows:

a. Place low-volume 5-digit and 3-digit bundles in only 5-digit scheme, 5-digit, 3-digit, and SCF sacks that contain at least 24 pieces; or in origin/entry SCF sacks; or on merged 5-digit scheme, 5-digit scheme, merged 5-digit, 5-digit, 5-digit metro, 3-digit, or SCF pallets, as appropriate.

b. Place low-volume 5-digit scheme and 3-digit scheme bundles in only 5-digit scheme, 3-digit, and SCF sacks that contain at least 24 pieces, or in origin/entry SCF sacks, or on 3-digit or SCF pallets, as appropriate. [M950.2.3]

* * * * *

707 Periodicals

* * * * *

13.0 Carrier Route Rate Eligibility

* * * * *

13.2 Sortation

13.2.1 Sequencing

* * * * *

[Revise item b by adding ''3-digit carrier routes sacks'' to read as follows:]

b. Nonletter-size mailings. Carrier route rates apply to carrier route bundles that are sorted onto pallets prepared under 705.8.0, 705.10.0, 705.12.0, or 705.13.0, as appropriate, or prepared in carrier route, 5-digit scheme (L001) carrier routes, 5-digit carrier routes, 3-digit carrier routes sacks under 23.0, or merged 3-digit sacks under 705.10.0. Sacks may be palletized under 705.8.0. [E230.2.1]

* * * * *

20.0 Sacks and Trays

* * * * *

22.0 Preparation of Presorted Periodicals

* * * * *

[Revise title of 22.4 to read as follows:]

22.4 Bundles With Fewer Than Six Pieces (''Low-Volume'' Bundles)

[Revise 22.4 for clarity and to add reference to 24 pieces to read as follows:]

Nonletter-size Periodicals may be prepared in 5-digit and 3-digit bundles containing fewer than six pieces when the publisher determines that such preparation improves service. Pieces in these ''low-volume'' bundles must be claimed at the basic rate. Low-volume bundles are permitted only when they are sacked or prepared on pallets as follows:

a. Place bundles in only 5-digit, 3-digit, and SCF sacks that contain at least 24 pieces, or in origin/entry SCF sacks, as appropriate.

b. Place bundles on only merged 5-digit scheme, 5-digit scheme, merged 5-digit, 5-digit, 5-digit metro, 3-digit, and SCF pallets.

* * * * *

22.6 Sack Preparation—Flat-Size Pieces and Irregular Parcels

* * * * *

[Revise items a, b, c, and e to amend sack minimum requirements to read as follows:]

a. 5-digit: required at 24 pieces, fewer pieces not permitted.

b. 3-digit: required at 24 pieces, fewer pieces not permitted.

c. SCF: required at 24 pieces, fewer pieces not permitted.

* * * * *

e. ADC: required at 24 pieces, fewer pieces not permitted.

* * * * *

23.0 Preparation of Carrier Route Periodicals

* * * * *

23.4 Preparation—Flat-Size Pieces and Irregular Parcels

[Revise 23.4.1 by adding new item d for 3-digit carrier routes sacks and adding 24-piece minimums to all other sack levels to read as follows:]

23.4.1 Sacking and Labeling

Preparation sequence, sack size, and labeling:

a. Carrier route: required at 24 pieces, fewer pieces not permitted.

1. Line 1: use city, state, and 5-digit ZIP Code on mail (see 21.1.2 for overseas military mail).

2. Line 2: ''PER'' or ''NEWS'' as applicable; followed by ''FLTS'' or ''IRREG'' as applicable; followed by ''WSS'' for saturation rate mail, or ''WSH'' for high density rate mail, or ''CR'' for basic rate mail; followed by the route type and number.

b. 5-digit scheme carrier routes: required at 24 pieces, fewer pieces not permitted.

1. Line 1: use L001, Column B.

2. Line 2: ''PER'' or ''NEWS'' as applicable; followed by ''FLTS'' or ''IRREG'' as applicable; followed by ''CR–RTS SCH.''

c. 5-digit carrier routes: required at 24 pieces, fewer pieces not permitted.

1. Line 1: use city, state, and 5-digit ZIP Code destination of bundles, preceded for military mail by the prefixes under 21.1.2.

2. Line 2: ''PER'' or ''NEWS'' as applicable; followed by ''FLTS'' or ''IRREG'' as applicable; followed by ''CR–RTS.''

d. 3-digit carrier routes: optional with one six-piece bundle.

1. Line 1: use the city, state, and ZIP Code shown in L002, Column A that corresponds to the 3-digit ZIP Code prefix of bundles.

2. Line 2: ''PER'' or ''NEWS'' as applicable; followed by ''FLTS'' or ''IRREG'' (as applicable) ''3D''; followed by ''CR–RTS.'' [M220.4.1]

* * * * *

[Revise 23.6 by revising the title, restructuring the text for clarity, correcting item a by deleting ''merged 5-digit scheme'' and ''merged 5-digit,'' and adding a reference to 24 pieces to read as follows:]

23.6 Bundles With Fewer Than Six Pieces (''Low-Volume'' Bundles)

Nonletter-size Periodicals may be prepared in carrier route bundles containing fewer than six pieces when the publisher determines that such preparation improves service. Pieces in these ''low-volume'' bundles must be claimed at the basic rate. Low-volume carrier route bundles are permitted only when they are sacked or prepared on pallets as follows:

a. Place bundles in only 5-digit scheme carrier routes and 5-digit carrier routes sacks that contain at least 24 pieces, or 3-digit carrier routes or merged 3-digit sacks that contain at least one six-piece carrier route bundle.

b. Place bundles on only merged 5-digit scheme, 5-digit scheme carrier routes, merged 5 digit, 5-digit carrier routes, 5-digit metro, 3-digit, and SCF pallets.

* * * * *

25.0 Preparation of Flat-Size Automation Periodicals

25.1 Basic Standards

* * * * *

[Revise 25.1.9 for clarity and to add references to 24 pieces to read as follows:]

25.1.9 Exception—Periodicals Preparation

5-digit scheme, 5-digit, 3-digit scheme, and 3-digit bundles may contain fewer than six pieces when the publisher determines that such preparation improves service. Pieces in

bundles containing fewer than six pieces (low-volume bundles) must be claimed at the basic rate. Low-volume bundles are permitted only when they are sacked or prepared on pallets under these conditions:

a. Place 5-digit and 3-digit bundles in only 5-digit scheme, 5-digit, 3-digit, and SCF sacks, as appropriate, that contain at least 24 pieces, or in merged 3-digit sacks that contain at least one six-piece carrier route bundle, or in origin/entry SCF sacks.

b. Place 5-digit and 3-digit bundles on only merged 5-digit scheme, 5-digit scheme, merged 5-digit, 5-digit, 5-digit metro, 3-digit, and SCF pallets, as appropriate.

c. Place 5-digit scheme and 3-digit scheme bundles in only 5-digit scheme, 3-digit, and SCF sacks, as appropriate, that contain at least 24 pieces, or in merged 3-digit sacks that contain at least one six-piece carrier route bundle, or in origin/entry SCF sacks.

d. Place 5-digit scheme and 3-digit scheme bundles on only 3-digit and SCF pallets, as appropriate.

* * * * *

25.3 Sacking and Labeling

* * * * *

[Revise items a through d and item f by amending sack minimum requirements to read as follows:]

a. 5-digit scheme; required at 24 pieces, fewer pieces not permitted; may contain 5-digit scheme bundles only; labeling: * * *

b. 5-digit; required at 24 pieces, fewer pieces not permitted; labeling: * * *

c. 3-digit; required at 24 pieces, fewer pieces not permitted; labeling: * * *

d. SCF: required at 24 pieces, fewer pieces not permitted; labeling: * * *

* * * * *

f. ADC: required at 24 pieces, fewer pieces not permitted; labeling: * * *

* * * * *

708 Technical Specifications

* * * * *

6.1.4 3–Digit Content Identifier Numbers

[Revise Exhibit 6.1.4 by adding new content identifier numbers to read as follows:]

* * * * *

PER Flats—Carrier Route

* * * * *

5-digit carrier routes sacks 386 PER FLTS 5D CR–RTS

* * * * *

3-digit carrier routes sacks 386 PER FLTS 3D CR–RTS

* * * * *

PER Flats—Merged Carrier Route, Automation, and Presorted

* * * * *

merged 3-digit sacks 322 PER FLTS CR/5D/3D

* * * * *

PER Irregular Parcels—Merged Carrier Route and Presorted

* * * * *

merged 3-digit sacks 390 PER IRREG CR/5D/3D

* * * * *

PER Irregular Parcels—Carrier Route

* * * * *

5-digit carrier routes sacks 396 PER IRREG 5D CR–RTS

* * * * *

3-digit carrier routes sacks 390 PER IRREG 3D CR–RTS

* * * * *

NEWS Flats—Carrier Route

* * * * *

5-digit carrier routes sacks 486 NEWS FLTS 5D CR–RTS

* * * * *

3-digit carrier routes sacks 486 NEWS FLTS 3D CR–RTS

* * * * *

NEWS Flats—Merged Carrier Route, Automation, and Presorted

* * * * *

merged 3-digit sacks 422 NEWS FLTS CR/5D/3D

* * * * *

NEWS Irregular Parcels—Merged Carrier Route and Presorted

* * * * *

merged 3-digit sacks 490 NEWS IRREG CR/5D/3D

* * * * *

NEWS Irregular Parcels—Carrier Route

* * * * *

5-digit carrier routes sacks 496 NEWS IRREG 5D CR–RTS

* * * * *

3-digit carrier routes sacks 490 NEWS IRREG 3D CR–RTS

* * * * *

We will publish an appropriate amendment to 39 CFR part 111 to reflect these changes if the proposal is adopted.

Neva R. Watson,

Attorney, Legislative.

[FR Doc. 05–16200 Filed 8–12–05; 8:45 am]

BILLING CODE 7710–12–P

ENVIRONMENTAL PROTECTION AGENCY

40 CFR Part 52

[R03–OAR–2005–MD–0011; FRL–7952–5]

Approval and Promulgation of Air Quality Implementation Plans; Maryland; Amendments to the Control of VOC Emissions From AIM Coatings

AGENCY: Environmental Protection Agency (EPA).

ACTION: Proposed rule.

SUMMARY: EPA is proposing to approve a State Implementation Plan (SIP) revision submitted by the State of Maryland. This revision pertains to the amendments of controlling volatile organic compound (VOC) emissions from architectural and industrial maintenance (AIM) coatings in Maryland. This action is being taken under the Clean Air Act (CAA or the Act).

DATES: Written comments must be received on or before September 14, 2005.

ADDRESSES: Submit your comments, identified by Regional Material in EDocket (RME) ID Number R03–OAR–2005–MD–0011 by one of the following methods:

A. Federal eRulemaking Portal: *http://www.regulations.gov.* Follow the on-line instructions for submitting comments.

B. Agency Web site: *http://www.docket.epa.gov/rmepub/* RME, EPA's electronic public docket and comment system, is EPA's preferred method for receiving comments. Follow the on-line instructions for submitting comments.

C. E-mail: *campbell.dave@epa.gov.*

D. Mail: R03–OAR–2005–MD–0011, David Campbell, Chief, Air Quality Planning Branch, Mailcode 3AP21, U.S. Environmental Protection Agency, Region III, 1650 Arch Street, Philadelphia, Pennsylvania 19103.

E. Hand Delivery: At the previously-listed EPA Region III address. Such deliveries are only accepted during the Docket's normal hours of operation, and special arrangements should be made for deliveries of boxed information.

Instructions: Direct your comments to RME ID No. R03–OAR–2005–MD–0011. EPA's policy is that all comments received will be included in the public docket without change, and may be made available online at *http://www.docket.epa.gov/rmepub/*, including any personal information provided, unless the comment includes information claimed to be Confidential

Business Information (CBI) or other information whose disclosure is restricted by statute. Do not submit information that you consider to be CBI or otherwise protected through RME, regulations.gov or e-mail. The EPA RME and the Federal regulations.gov Web sites are an ''anonymous access'' system, which means EPA will not know your identity or contact information unless you provide it in the body of your comment. If you send an e-mail comment directly to EPA without going through RME or regulations.gov, your e-mail address will be automatically captured and included as part of the comment that is placed in the public docket and made available on the Internet. If you submit an electronic comment, EPA recommends that you include your name and other contact information in the body of your comment and with any disk or CD–ROM you submit. If EPA cannot read your comment due to technical difficulties and cannot contact you for clarification, EPA may not be able to consider your comment. Electronic files should avoid the use of special characters, any form of encryption, and be free of any defects or viruses.

Docket: All documents in the electronic docket are listed in the RME index at *http://www.docket.epa.gov/rmepub/.* Although listed in the index, some information is not publicly available, *i.e.*, CBI or other information whose disclosure is restricted by statute. Certain other material, such as copyrighted material, is not placed on the Internet and will be publicly available only in hard copy form. Publicly available docket materials are available either electronically in RME or in hard copy during normal business hours at the Air Protection Division, U.S. Environmental Protection Agency, Region III, 1650 Arch Street, Philadelphia, Pennsylvania 19103. Copies of the State submittal are available at the Maryland Department of the Environment, 1800 Washington Boulevard, Suite 705, Baltimore, Maryland 21230.

FOR FURTHER INFORMATION CONTACT: Rose Quinto, (215) 814–2182, or by e-mail at *quinto.rose@epa.gov.*

SUPPLEMENTARY INFORMATION: On March 15, 2005, the Maryland Department of the Environment (MDE) submitted a revision to its SIP. The SIP revision consists of amendments to Regulations .06, .10, and .12; repeal of existing Regulation .13; and adoption of new Regulation .13 under COMAR 26.11.33 Architectural Coatings.

I. Background

On March 19, 2004, MDE submitted a regulation establishing standards to reduce VOC emissions from AIM coatings in Maryland. These standards were based on a regional model rule developed by an Ozone Transport Commission (OTC) workgroup consisting of several states, including Maryland. EPA published a proposed rulemaking of the Maryland AIM coatings rule on May 25, 2004 (69 FR 29674), and the final rulemaking on May 12, 2005 (70 FR 24979) with an effective date of June 13, 2005.

II. Summary of SIP Revision

To provide consistency with similar regulations adopted by the other states in the Ozone Transport Region (OTR), MDE submitted amendments to COMAR 26.11.33 Architectural Coatings. The amendments are:

1. Addition of four industrial coatings to the list of specific coatings that are excluded from applying the most restrictive VOC limit in Regulation .06B: calcimine recoaters, impacted immersion coatings, nuclear coatings, and thermoplastic rubber coating and mastic. Regulation .06A requires the application of the most restrictive VOC limit to a coating that satisfies the definition for more than one coating or for different applications.
2. Remove the requirement to include on the label that conversion varnishes are to be used only by professionals. Conversion varnish is a specially formulated coating made available to professionals that are involved with the coating or recoating of hardwood floors.
3. The requirement for coating manufacturers to submit annual reports on the volume of coating sold in Maryland has been changed to require the information to be maintained for five years and made available to MDE upon request.

III. Proposed Action

EPA's review of this material indicates that the MDE amendments to its AIM coatings rule are administrative changes that will not affect VOC reductions achieved though compliance with the coating standards. EPA is proposing to approve a revision to the Maryland SIP for the amendments of COMAR 26.11.33 submitted on March 15, 2005. EPA is soliciting public comments on the issues discussed in this document. These comments will be considered before taking final action.

IV. Statutory and Executive Order Reviews

Under Executive Order 12866 (58 FR 51735, October 4, 1993), this proposed action is not a ''significant regulatory action'' and therefore is not subject to review by the Office of Management and Budget. For this reason, this action is also not subject to Executive Order 13211, ''Actions Concerning Regulations That Significantly Affect Energy Supply, Distribution, or Use'' (66 FR 28355 (May 22, 2001)). This action merely proposes to approve state law as meeting Federal requirements and imposes no additional requirements beyond those imposed by state law. Accordingly, the Administrator certifies that this proposed rule will not have a significant economic impact on a substantial number of small entities under the Regulatory Flexibility Act (5 U.S.C. 601 *et seq.*). Because this rule proposes to approve pre-existing requirements under state law and does not impose any additional enforceable duty beyond that required by state law, it does not contain any unfunded mandate or significantly or uniquely affect small governments, as described in the Unfunded Mandates Reform Act of 1995 (Public Law 104–4). This proposed rule also does not have a substantial direct effect on one or more Indian tribes, on the relationship between the Federal Government and Indian tribes, or on the distribution of power and responsibilities between the Federal Government and Indian tribes, as specified by Executive Order 13175 (65 FR 67249, November 9, 2000), nor will it have substantial direct effects on the States, on the relationship between the national government and the States, or on the distribution of power and responsibilities among the various levels of government, as specified in Executive Order 13132 (64 FR 43255, August 10, 1999), because it merely proposes to approve a state rule implementing a Federal standard, and does not alter the relationship or the distribution of power and responsibilities established in the Clean Air Act. This proposed rule also is not subject to Executive Order 13045 (62 FR 19885, April 23, 1997), because it is not economically significant.

In reviewing SIP submissions, EPA's role is to approve state choices, provided that they meet the criteria of the Clean Air Act. In this context, in the absence of a prior existing requirement for the State to use voluntary consensus standards (VCS), EPA has no authority to disapprove a SIP submission for failure to use VCS. It would thus be inconsistent with applicable law for EPA, when it reviews a SIP submission, to use VCS in place of a SIP submission that otherwise satisfies the provisions of the Clean Air Act. Thus, the

requirements of section 12(d) of the National Technology Transfer and Advancement Act of 1995 (15 U.S.C. 272 note) do not apply. As required by section 3 of Executive Order 12988 (61 FR 4729, February 7, 1996), in issuing this proposed rule, EPA has taken the necessary steps to eliminate drafting errors and ambiguity, minimize potential litigation, and provide a clear legal standard for affected conduct. EPA has complied with Executive Order 12630 (53 FR 8859, March 15, 1988) by examining the takings implications of the rule in accordance with the ''Attorney General's Supplemental Guidelines for the Evaluation of Risk and Avoidance of Unanticipated Takings'' issued under the executive order. This proposed rule pertaining to the amendments to the Maryland's AIM coatings rule does not impose an information collection burden under the provisions of the Paperwork Reduction Act of 1995 (44 U.S.C. 3501 *et seq.*).

List of Subjects in 40 CFR Part 52

Environmental protection, Air pollution control, Nitrogen dioxide, Ozone, Reporting and recordkeeping requirements, Volatile organic compounds.

Authority: 42 U.S.C. 7401 *et seq.*

Dated: August 5, 2005.

Donald S. Welsh,

Regional Administrator, Region III.

[FR Doc. 05–16111 Filed 8–12–05; 8:45 am]

BILLING CODE 6560–50–P

DEPARTMENT OF HEALTH AND HUMAN SERVICES

Centers for Medicare & Medicaid Services

42 CFR Part 483

[CMS–3198–P]

RIN 0938–AN95

Medicare and Medicaid Programs; Condition of Participation: Immunization Standard for Long Term Care Facilities

AGENCY: Centers for Medicare & Medicaid Services (CMS), HHS.

ACTION: Proposed rule.

SUMMARY: The goal of this proposed rule is to increase immunization rates in Medicare and Medicaid participating long term care (LTC) facilities by requiring LTC facilities to offer each resident immunization against influenza annually, as well as lifetime immunization against pneumococcal disease. LTC facilities would be required to ensure that each resident receives an annual immunization against influenza and receives the pneumococcal immunization once, unless medically contraindicated or the resident or the resident's legal representative refuses immunization. Increasing the use of Medicare-funded preventive services is a goal of both CMS and the Centers for Disease Control and Prevention (CDC). This proposed rule is intended to increase the number of elderly receiving influenza and pneumococcal immunization and decrease the morbidity and mortality rate from influenza and pneumococcal diseases.

DATES: To be assured consideration, comments must be received at one of the addresses provided below, no later than 5 p.m. on August 30, 2005.

ADDRESSES: In commenting, please refer to file code CMS–3198–P. Because of staff and resource limitations, we cannot accept comments by facsimile (FAX) transmission.

You may submit comments in one of three ways (no duplicates, please):

1. *Electronically.* You may submit electronic comments on specific issues in this regulation to *http://www.cms.hhs.gov/regulations/ecomments.* (Attachments should be in Microsoft Word, WordPerfect, or Excel; however, we prefer Microsoft Word.)

2. *By regular mail.* You may mail written comments (one original and two copies) to the following address ONLY: Centers for Medicare & Medicaid Services, Department of Health and Human Services, Attention: CMS–3198–P, P.O. Box 8010, Baltimore, MD 21244–8010.

Please allow sufficient time for mailed comments to be received before the close of the comment period.

3. *By express or overnight mail.* You may send written comments (one original and two copies) to the following address ONLY: Centers for Medicare & Medicaid Services, Department of Health and Human Services, Attention: CMS–3198–P, Mail Stop C4–26–05, 7500 Security Boulevard, Baltimore, MD 21244–1850.

4. *By hand or courier.* If you prefer, you may deliver (by hand or courier) your written comments (one original and two copies) before the close of the comment period to one of the following addresses. If you intend to deliver your comments to the Baltimore address, please call telephone number (410) 786–9994 in advance to schedule your arrival with one of our staff members. Room 445–G, Hubert H. Humphrey Building, 200 Independence Avenue, SW., Washington, DC 20201; or 7500 Security Boulevard, Baltimore, MD 21244–1850.

(Because access to the interior of the HHH Building is not readily available to persons without Federal Government identification, commenters are encouraged to leave their comments in the CMS drop slots located in the main lobby of the building. A stamp-in clock is available for persons wishing to retain a proof of filing by stamping in and retaining an extra copy of the comments being filed.)

Comments mailed to the addresses indicated as appropriate for hand or courier delivery may be delayed and received after the comment period.

For information on viewing public comments, see the beginning of the **SUPPLEMENTARY INFORMATION** section.

FOR FURTHER INFORMATION CONTACT: Anita Panicker, (410) 786–5646. Jeannie Miller, (410) 786–3164. Rachael Weinstein, (410) 786–6775.

SUPPLEMENTARY INFORMATION:

Submitting Comments: We welcome comments from the public on all issues set forth in this rule to assist us in fully considering issues and developing policies. You can assist us by referencing the file code CMS–3198–P and the specific ''issue identifier'' that precedes the section on which you choose to comment.

Inspection of Public Comments: All comments received before the close of the comment period are available for viewing by the public, including any personally identifiable or confidential business information that is included in a comment. CMS posts all electronic comments received before the close of the comment period on its public Web site as soon as possible after they have been received. Hard copy comments received timely will be available for public inspection as they are received, generally beginning approximately 3 weeks after publication of a document, at the headquarters of the Centers for Medicare & Medicaid Services, 7500 Security Boulevard, Baltimore, Maryland 21244, Monday through Friday of each week from 8:30 a.m. to 4 p.m. To schedule an appointment to view public comments, phone 1–800–743–3951.

I. Background

(If you choose to comment on issues in this section, please include the caption ''BACKGROUND'' at the beginning of your comments.)

A. General

The CDC's Advisory Committee on Immunization Practices (ACIP) reported on May 28, 2004 (*http://www.cdc.gov/mmwr/preview/mmwrhtml/*

rr5306a1.htm), that epidemics of influenza have been responsible for an average of approximately 36,000 deaths per year in the United States between 1990 and 1999. There is an added danger when it comes to people age 65 or older or with high risk conditions such as individuals residing in long term care facilities. In 2002, ACIP estimated the rates of influenza related hospitalization as 392 to 635 per 100,000 among adults with one or more high risk conditions, compared to 13 to 33 per 100,000 among those without high risk conditions.

According to the CDC, influenza and invasive pneumococcal disease kill more people in the United States each year than all other vaccine-preventable diseases combined. Influenza and pneumonia combined represent the fifth leading cause of death in the elderly. Immunization is the primary method for preventing invasive pneumococcal disease as well as influenza and its more severe complications. The ACIP reported in 2002 that the primary target group for influenza vaccination includes persons who are at high risk for serious complications from influenza, including approximately 35 million persons who are more than 65 years of age and approximately 33 to 39 million persons less than 65 years of age who have chronic underlying medical conditions. ACIP recommends that all residents of long term care facilities should be assessed for their needs for pneumococcal polysaccharide vaccine (PPV) and that people 65 or older, as well as persons less than 65 who have chronic illness or who are living in long term care facilities, receive the immunization if eligible. As the vast majority of the residents in nursing homes are 65 years and older, or if younger, probably have one or more chronic medical conditions for which the vaccine is indicated, one would expect that nearly all residents are candidates for pneumococcal vaccination. Therefore, it is vital to increase immunization rates to reduce and eliminate vaccine-preventable causes of morbidity and mortality.

Despite the Federal government's unified efforts to increase the availability of safe and effective vaccines and despite substantial progress in reducing many vaccine-preventable diseases, many individuals are not receiving influenza and pneumococcal vaccines.

Section 4107 of the Balanced Budget Act of 1997 extended the influenza and pneumococcal immunization campaign being conducted by CMS in conjunction with CDC and the National Coalition for Adult Immunization through fiscal year 2002, authorizing $8 million for each fiscal year from 1998 to 2002. Although Medicare reimbursement for influenza and pneumococcal immunizations was increased under this legislation, rates of immunization did not improve as anticipated.

On April 30, 1999, the CDC and CMS entered into a memorandum of understanding (IA 99–87), to establish a program of collaboration between the two agencies to enhance assessment of health status and delivery of preventive services to beneficiaries of the Medicare program. One of the initial areas highlighted for collaboration was improving influenza and pneumococcal immunization coverage through ''standing orders'' for those populations and in those settings designated as appropriate by the ACIP.

A March 24, 2000 ACIP report recommended the use of standing orders programs in both outpatient and inpatient settings to increase the number of individuals who receive the influenza vaccine (*http://www.cdc.gov/mmwr/preview/mmwrhtml/rr4901a1.htm*). On October 2, 2002 (67 FR 61808), CMS published a final rule with comment period that removed the physician order requirement for influenza and pneumococcal vaccinations from the Conditions of Participation (CoPs) for Medicare and Medicaid participating hospitals, (LTC) facilities, and home health agencies (HHAs). The final rule was effective as of its publication date. Although the CoPs for these provider types require a physician's order for drugs and biologicals that must be signed by the practitioner responsible for the care of the patient or resident, the CoPs make an exception for influenza and PPV. These vaccines now can be administered per a physician-approved facility or agency policy, following assessment of the patient or resident for contraindications. The final rule was a major step towards increasing the immunization rates in the LTC population.

To date we do not have data on the specific immunization rates of nursing facility residents since the publication of this rule. Medicare Current Beneficiary Survey (MCBS) data shows that, the rate of influenza vaccination of individuals age 65 and older was 70.4 percent in the year 2000, 67.4 percent in 2001, 69 percent in 2002 and 70.4 percent in 2003. MCBS data for pneumococcal vaccination for individuals age 65 and older was 62.7 percent in 2000, 63.3 percent in 2001, 64.6 percent in 2002 and 66.4 percent in 2003. These rates demonstrate that we need to implement strategies to help us achieve the goal set by the Department of Health and Human Services (DHHS) Healthy People 2010, which set a target rate of 90 percent for influenza and pneumococcal vaccination for adults aged 65 years and older. Further information on preventive services like immunizations are available at the healthy aging site at *http://www.cms.hhs.gov/healthyaging/2a.asp* and at *http://www.healthypeople.gov/*.

B. Influenza Incidence and Prevention

Numerous studies referenced by the CDC at the Morbidity and Mortality Weekly Report (MMWR) website show that: (1) Persons 65 years and older are at high risk of contracting influenza, (2) they are more likely than the general population to need hospitalization or to die from complications of influenza, and (3) immunizations are effective in preventing influenza and its complications in this population (*http://www.cdc.gov/mmwr/preview/mmwrhtml/rr5306a1.htm*).

In the May 2004 MMWR referenced above, the ACIP stated that while rates of influenza infection are high among children, rates of serious illness and death are highest among persons aged ≥65 years and persons of any age who have medical conditions that place them at increased risk for complications from influenza. According to ACIP, the primary target groups recommended for annual vaccination are as follows: (1) Persons at increased risk for influenza-related complications (for example, those aged ≥65 years and persons of any age with certain chronic medical conditions); (2) persons aged 50 to 64 years (because this group has an elevated prevalence of certain chronic medical conditions); and (3) persons who live with or care for persons at high risk (for example, health-care workers and individuals within a household who have frequent contact with persons at high risk and who can transmit influenza to those persons at high risk).

The ACIP report states that vaccination is associated with reductions in influenza-related respiratory illness and physician visits among all age groups, hospitalization and death among persons at high risk, otitis media among children, and work absenteeism among adults. Although influenza vaccination levels increased substantially during the 1990s, further improvements in vaccine coverage levels are needed. Influenza vaccination remains the cornerstone for the control and treatment of influenza. (MMWR: Recommendations and Reports May 28, 2004/53(RR06); 1–40 *http://www.cdc.gov/mmwr/preview/mmwrhtml/rr5306a1.htm*).

Although influenza affects persons of all ages, the CDC has identified several groups who are at increased risk for complications. One such group is comprised of residents of nursing homes or other long-term care facilities. An article in American Family Physician, January 1, 2002 titled, ''Influenza in the Nursing Home,'' states that during influenza epidemics, mortality rates among nursing home residents often exceed 5 percent of the nursing home population in the country. To lessen the impact of this infectious disease, the CDC recommends the influenza vaccine as the primary way of preventing the illness and its complications (*http://www.aafp.org/afp/20020101/75.html*).

The Director of Health Care-Public Health Issues for the General Accountability Office (GAO) testified before the United States Senate Special Committee on Aging, on September 28, concerning a 2004 GAO study titled, ''Infectious Disease Preparedness: Federal Challenges in Responding to Influenza Outbreaks'' (*http://www.gao.gov/new.items/d041100t.pdf*). She stated that the study was conducted to identify the challenges in preventing the spread of the influenza virus because influenza is associated with an average of 36,000 deaths and more than 200,000 hospitalizations each year in the United States. Furthermore, nine out of ten persons who die from influenza and one out of two who are hospitalized due to influenza are age 65 or older. The GAO was asked to conduct the study to assess issues related to supply, demand, and distribution of vaccine during a typical flu season and to assess the Federal plan to respond to an influenza pandemic. The study was based on a survey of physician group practices, interviews with health department officials in all 50 states, as well as information about CDC activities in the 2003–04 flu season. The GAO found that the most effective way to prevent influenza is by immunizing individuals against influenza every fall season.

The 2004 ACIP recommendations referenced earlier state that influenza vaccine effectiveness varies in the elderly; however, influenza vaccine is still effective at preventing severe illness, secondary complications, and death. In the elderly population residing in nursing homes, the vaccine can be 50–60 percent effective in preventing hospitalization or pneumonia and 80 percent effective in preventing death, even though the effectiveness in preventing influenza illness often ranges from 30 percent to 40 percent.

According to the January 1, 2002 article in American Family Physician referenced earlier, a number of studies have also shown that nursing homes with high rates of vaccinated residents have fewer outbreaks of influenza than nursing homes with lower vaccination rates. The article further states that many studies have shown that influenza vaccination of nursing home residents and staff can significantly decrease rates of hospitalization, pneumonia, and related mortality. Therefore, it is vital to the well being of the residents of nursing homes that they are offered immunization, if not medically contraindicated, and that facilities ensure residents receive the immunizations at the appropriate time to prevent the spread of the influenza virus.

The February 14, 2005, article in the Archives of Internal Medicine titled ''Impact of Influenza Vaccination on Seasonal Mortality in the U.S. Elderly Population'' reports the results of the study conducted by Lone Simonsen and colleagues on flu vaccination rates among elderly (*http://archinte.ama-assn.org/cgi/content/abstract/165/3/265*). This study reports that vaccination of the elderly population against influenza may be less effective in preventing death among the elderly than previously estimated. CDC and National Institute of Health (NIH) jointly, in a February 15, 2005, press release (*http://www.cdc.gov/flu/pdf/statementeldmortality.pdf*) concluded that the Simonsen, *et al.* study does not show that the flu vaccine is ineffective at protecting the elderly from influenza. Rather, the study indicates that different research approaches result in different estimates of influenza vaccine effectiveness at preventing death among the elderly.

The Simonsen, *et al.*, study does not imply that the elderly should not receive influenza vaccine. Furthermore, we note that this study addresses the elderly population as a whole, and does not analyze the more vulnerable group, nursing home residents, addressed by this regulation and the studies of those residents summarized later in this preamble. The conclusions in the study are in sharp contrast to other peer-reviewed studies that address the same issue (*see* for example, JAMA; Chicago; Oct 22–Oct 29, 1997; 278; 16; Jane E Sisk; Alan J Moskowitz; William Whang; Jean D Lin *et al.*). The CDC and ACIP continually review their influenza vaccine recommendations as well as studies and published research in order to develop the best recommendations for protecting all Americans from influenza. The Simonsen, *et al.*, study is a reminder that there is room for improvement in how we protect the elderly from influenza, and CDC and NIH encourage research that strengthens our ability to do so.

The CDC continues to recommend that people aged 65 and older get vaccinated against influenza each year as persons aged 65 and older are at high risk for complications, hospitalizations, and deaths from influenza. In the joint press release referenced above, the CDC and National Institute of Health (NIH) continue to support the ACIP recommendation that people aged 65 and older get vaccinated against influenza each year.

C. Pneumococcal Disease Incidence and Prevention

Like influenza, invasive pneumococcal disease is particularly prevalent and severe in those 65 years and older. This population is at high risk of contracting invasive pneumococcal disease, with a high risk of resultant complications, hospitalizations, and deaths. Pneumococcal immunizations are effective in preventing pneumococcal disease in this population.

According to CDC's Active Bacterial Core Surveillance for pneumococcal disease, approximately 5,700 deaths from invasive pneumococcal disease (bacteremia and meningitis) are estimated to have occurred in the United States in 2002 (*http://www.cdc.gov/ncidod/dbmd/abcs/survreports/spneu02.pdf*). An article in the American Journal of Preventive Medicine, August 2003, titled ''Standards for Adult Immunization Practices'' states that overall, vaccine effectiveness against invasive pneumococcal disease among immunocompetent people aged 65 years is 75 percent. Based on 1998 projections, annually, 76 percent of invasive pneumococcal disease cases and 87 percent of resulting deaths occurred in people who were eligible for pneumococcal vaccine in the United States. (*http://www.cdc.gov/nip/recs/rev_stds_adult_AJPM.pdf*)

The ACIP and CDC recommend immunization for pneumococcal disease for those 65 years old or older, and for people with a serious long-term health problem, such as heart disease, diabetes, or immunosuppression due to disease, organ transplantation, or medical treatment such as chemotherapy. The American Lung Association warns that people considered at high risk for invasive pneumococcal disease include the elderly, the very young, and those with underlying health problems, such as chronic obstructive pulmonary disease (COPD). Patients with diseases that impair the immune system, such as AIDS, or patients with other chronic

illnesses, such as asthma, or those undergoing cancer therapy or organ transplantation, are particularly vulnerable.

According to CDC recommendations, usually one dose of the PPV is all that is needed to prevent pneumococcal disease or a person only needs to be immunized once in a life time. However, a second dose is recommended for people 65 and older who received their first dose prior to 65 years of age, if five or more years have passed since that dose. A second dose is also recommended for people with a damaged spleen or without a spleen, sickle-cell disease, HIV infection or AIDS, cancer, leukemia, lymphoma, multiplemyeloma, kidney failure or nephrotic syndrome, an organ or bone marrow transplant, or who are taking medication that lowers immunity (such as chemotherapy or long-term steroids).

Accordingly, we believe it vital that facilities secure the consent of their residents or legal representative for vaccination and provide their residents with vaccinations. In some cases, this may require that they educate residents about the advantages of being vaccinated so that the residents will understand the risks of pneumococcal infections and will be willing to receive the vaccine. The 1997 ACIP recommendations state that, ''Pneumococcal polysaccharide vaccine generally is considered safe based on clinical experience since 1977, when the pneumococcal polysaccharide vaccine was licensed in the United States. Approximately half of the persons who receive pneumococcal vaccine develop mild, local side effects (for example, pain at the injection site, erythema, and swelling). These reactions usually persist for less than 48 hours. Moderate systemic reactions (for example, fever and myalgias) and more severe local reactions (for example, local induration) are rare. Severe systemic adverse effects (for example, anaphylactic reactions) rarely have been reported after administration of pneumococcal vaccine. In a recent meta-analysis of nine randomized controlled trials of pneumococcal vaccine efficacy, local reactions were observed among approximately one third or fewer of 7,531 patients receiving the vaccine, and there were no reports of severe febrile or anaphylactic reactions.'' The 1997 ACIP recommendations further state that pneumococcal vaccination has not been causally associated with death among vaccine recipients. Additional information about precautions and contraindications can be attained from CDC and the vaccine manufacturer's package insert should also be reviewed. (*http://www.cdc.gov/mmwr/preview/mmwrhtml/00047135.htm#00002349.htm*).

CDC's March 24, 2000 MMWR states that in recent years, a rapid emergence of antimicrobial resistance among pneumococci, especially to penicillin, has occurred. Increasing pneumococcal vaccination rates could help prevent invasive pneumococcal disease caused by vaccine-type, multidrug-resistant pneumococci. Outbreaks of pneumococcal disease caused by a single drug resistant pneumococcal serotype have occurred in institutional settings, including nursing homes. The same MMWR report states that in 1999, because of concerns about pneumococcal antimicrobial resistance and underuse of pneumococcal vaccine, the American Medical Association and several partner organizations issued a Quality Care Alert that supports ACIP's recommendations for pneumococcal vaccination. (Use of Standing Orders Programs to Increase Adult Vaccination Rates: MMWR 2000/49 RR01 15–26 March 24.)

A CMS/CDC report, ''Respiratory Disease Burden in Nursing Homes'' (*http://www.nationalpneumonia.org/sop/RDBNH_INTERIMProjectRpt_1–31–03.pdf*) states that both influenza vaccine and PPV are protective to residents in nursing homes. Based on two years of analysis (multivariate/multilevel), influenza vaccine may be associated with a 27 to 35 percent reduction in mortality, and a 44 to 52 percent reduction in all-cause hospitalization. Similarly, pneumococcal vaccination may be associated with a 20 to 26 percent reduction in mortality, and a 12 to 28 percent reduction in all-cause hospitalization in nursing home residents. The report also suggests that a facility-level influenza vaccination of 80 percent of residents may be independently associated with reduced patient hospitalization and death.

D. Why a Change in the Conditions of Participation Is Needed

In January 2000, the Department of Health and Human Services launched Healthy People 2010, a comprehensive, nationwide health promotion and disease prevention agenda. ''Immunizations and Infectious Diseases'' is one of the focus areas. Healthy People 2010 set the target rate for influenza and PPV vaccination of adults aged 65 years and older at 90 percent. According to CMS's Adult Immunization Project ''despite the fact that influenza and pneumococcal vaccines are clinically effective, cost-effective, and are Medicare Part B covered benefits, they remain underutilized'' (*http://www.ofmq.com/user_uploads/National%20Immunization%20Project.pdf*).

Based on the 1999 National Nursing Home Survey, only 66 percent of nursing home residents had received the influenza vaccine in the previous year and only 38 percent had ever had the pneumococcal vaccine. The October 2004 article in the American Family Physician titled ''Pneumonia in Older Residents of Long-Term Care Facilities'' stated that, when compared to persons in the overall community, residents in LTC facilities have more functional disabilities and underlying medical illnesses and are at increased risk of acquiring infectious diseases (*http://www.aafp.org/afp/20041015/1495.html*). Risk factors include un-witnessed aspiration, sedative medication, and co-morbid illnesses. Influenza-associated mortality is a major concern for persons with chronic diseases; this mortality increase is most marked in persons 65 years of age or older, with more than 90 percent of the deaths attributed to pneumonia and influenza occurring in persons of this age group.

As noted in the October 15, 2004 article ''Pneumonia in Older Residents of Long-Term Care Facilities'' in the journal of American Family Physician, October 15, 2004, ''The number of frail older adults living in LTC facility is expected to increase dramatically over the next 30 years'' (*http://www.aafp.org/afp/20041015/1495.html*). The article further states that an estimated 40 percent of adults will spend some time in a LTC facility before dying. Unless control measures are more vigorously implemented, the number of deaths from influenza and pneumonia with respect to residents in LTC facilities and the number of consequent complications might increase significantly.

In summary, immunizations save lives and can help avoid needless suffering and unnecessary costs caused by complications from various infectious diseases, and, as many family members and health care workers know, they can prevent infection of others. However, despite the availability of safe and effective vaccines, substantial portions of susceptible adults are not being immunized. To reduce morbidity and mortality rates, delivering appropriate vaccinations in a timely manner is vital. This rule would facilitate the delivery of appropriate vaccinations to residents in LTC facilities in a timely manner and increase vaccination rates, and thereby decrease the morbidity and mortality

rate of influenza and pneumococcal diseases. This rule also has the potential to reduce overall healthcare costs by reducing the need for the treatment of influenza and pneumococcal diseases and their complications.

E. Immunizations and LTC Facilities

According to a June 2002 CDC summary of the National Nursing Home Survey, 46,000 nursing home residents (2.5 percent) had pneumonia in 1999. The average length of stay in a LTC facility for a resident with pneumonia as a primary diagnosis was 124 days in 1999 (*http://www.cdc.gov/nchs/data/series/sr_13/sr13_152.pdf*).

A November 2000 article in the journal Infection Control and Hospital Epidemiology titled ''Increasing Pneumococcal Vaccination Rates Among Residents of Long-Term Care Facilities,'' noted that there were 1,590,763 individuals over 65 years of age residing in LTC facilities in the United States in 1990, and the number is estimated to grow to 2.9 million by 2020 (Infection Control and Hospital Epidemiology, Volume 21 (11) (705–710) November 2000). A substantial increase in vaccination rates among such a large population would significantly decrease the number of cases of influenza and pneumococcal bacteremia and related death.

A 1999 RAND report stated that the proportion of the U.S. population over age 65 had increased from 5 percent in 1900 to 13 percent in 1997. This change in demographics, combined with an increase in average life expectancy, has highlighted the importance of preventive care services for older individuals. The October 1997 Journal of the American Medical Association (JAMA) article ''Cost-Effectiveness of Vaccination Against Pneumococcal Bacteremia Among Elderly People'' indicated that vaccination of elderly people against pneumococcal bacteremia is one of the few interventions that have been found to both improve health and save medical costs. Vaccination both reduced medical expenses and improved health for the overall age group of 65 years and older (JAMA; Chicago; Oct 22-Oct 29 1997; 278; 16; Jane E Sisk; Alan J Moskowitz; William Whang; Jean D Lin *et al.*). The article further states ''Vaccination of the 23 million elderly people unvaccinated in 1993 would have gained about 78,000 years of healthy life and saved $194 million.''

Pneumococcal vaccination saves costs in the prevention of bacteremia alone and is greatly underused among the elderly population, on both health and economic grounds. These results support recent recommendations of the ACIP and public and private efforts under way to improve vaccination rates

F. Vaccine Shortages

In the fall of 2004 there was a major shortage of inactivated influenza vaccine in the United States. One of the major manufacturers of the influenza vaccine informed the CDC in early October 2004 that none of its flu vaccine would be available for distribution in the United States. Because of the shortage, Federal health officials released new guidelines as to who should receive a flu vaccine, describing those at high-risk of influenza-related health complications as priority groups. At that time, the interim recommendations from CDC stated that people 65 and older, as well as all those between the ages of 2 to 64 with chronic medical conditions and 6–23 month old children, were to be prioritized for receiving influenza vaccination. Other groups deemed a priority were nursing homes residents. We understand that providers of LTC services may be concerned about how they would meet the requirements of this regulation should an influenza vaccine shortage occur in the future. In the case of a true vaccine shortage as declared by CDC, CMS could exercise its enforcement discretion by instructing the State Survey Agencies (SSAs) not to cite facilities as out-of-compliance with this requirement if they were unable to obtain vaccine for their residents.

II. Provisions of the Proposed Rule

On May 28, 2004, the ACIP recommendations on ''Prevention and Control of Influenza'' (*http://www.cdc.gov/mmwr/preview/mmwrhtml/rr5306a1.htm*), outlined the requirements for a successful vaccination program, including combined publicity and education for health-care workers and other potential vaccine recipients; a plan for identifying persons at high risk; use of reminder/recall systems; and efforts to remove administrative and financial barriers that prevent persons from receiving the vaccines, including use of standing orders programs. We propose to add § 483.25 (n), that would require LTC facilities to offer each resident between, October 1 through March 31, immunization against influenza annually, as well as lifetime immunization against pneumococcal disease. LTC facilities would be required to ensure that each resident receives an annual immunization against influenza and receives the pneumococcal immunization unless medically contraindicated, based on an assessment, or unless the resident or the resident's legal representative refuses consent. As an alternative, a second pneumococcal shot may be given 5 years after the first pneumococcal immunization if the vaccine was administered prior to age 65, and only according to a practitioner recommendation.

We are not proposing to require the development of protocols nor specific documentation. However, as a facility develops and implements immunization protocols or procedures, we expect that obtaining previous immunization history on each resident, when possible, would be a part of the process. Additionally, this rule proposes that the resident's immunization status be documented in the resident's medical record including but not limited to the information that the resident received influenza or/and *pneumococcal immunization*, or immunization was medically contraindicated, or immunization was refused. If the immunization was refused, documention must include that the resident or the resident's legal representative received appropriate education and consultation regarding the benefits of influenza and *pneumococcal* immunization. Updating and maintaining resident medical records related to immunization was identified as an issue by the CDC. The National Nursing Home Survey (NNHS), conducted in 1995 by the CDC, National Center for Health Statistics, indicated that a large number of nursing facilities did not maintain complete, easily-accessible information on the vaccination status of their residents. Nearly 21 percent of the nursing home residents did not have documentation regarding influenza vaccination, and 43 percent did not have documentation regarding pneumococcal vaccination. Thus, it was difficult to reliably estimate levels of influenza and pneumococcal vaccine use among nursing home residents in 1995. The 1995 NNHS also indicated that facilities with an organized immunization program had higher immunization rates than those without a program. To encourage the development of organized immunization programs in long-term care facilities, CDC created a ''how to'' manual. The manual outlines general recommendations for establishing immunization programs that should integrate seamlessly into the facility's overall policies and procedures for quality care. The manual is available on line at *http://www.cdc.gov/nip/publications/long-term-care.pdf.*

The March 18, 2005 CDC manual titled ''Prevention and Control of

Vaccine-Preventable Diseases in Long-Term Care Facilities,'' Section IV, focuses on the ACIP recommendation related to ''staff immunization to reduce staff illnesses during the influenza season to reduce the spread of influenza from workers to residents'' (*http://www.cdc.gov/nip/publications/long-term-care.pdf*). We acknowledge the importance of staff immunization. In a similar vein, our infection control requirements at 42 CFR 483.65(b)(2) state that ''The facility must prohibit employees with a communicable disease or infected skin lesions from direct contact with residents or their food, if direct contact will transmit the disease.'' The intent of this regulation is to prevent the spread of communicable diseases from employees to residents.

Influenza immunizations are given annually. ACIP (May 27, 1994) recommends that during October and November each year, vaccination should be routinely provided to all residents of chronic-care facilities with the concurrence of attending physicians. Consent is required for vaccination and can be obtained from the resident or their legal representative at the time of admission to the facility or anytime afterwards. When possible, all residents should be vaccinated at the beginning of the influenza season. Residents admitted after the influenza season begins, must be vaccinated at the time of admission until the end of March (ACIP, May 27, 1994). Therefore, we propose that all residents be offered immunization annually from October 1 through March 31. We hope to have this rule finalized by October 1, 2005, before the 2005–2006 influenza season.

PPV is given once in a life time, with certain exceptions. This proposed rule recognizes the exception by including language about a second shot at § 483.25(n)(2)(iv). This exception states, a second shot may be given 5 years after the first pneumococcal immunization if the vaccine was administered before age 65 and only according to a practitioner recommendation. The following is a simple algorithm ACIP recommends for pneumococcal polysaccharide vaccine.

FIGURE 1. Algorithm for vaccinating persons aged ≥65 years

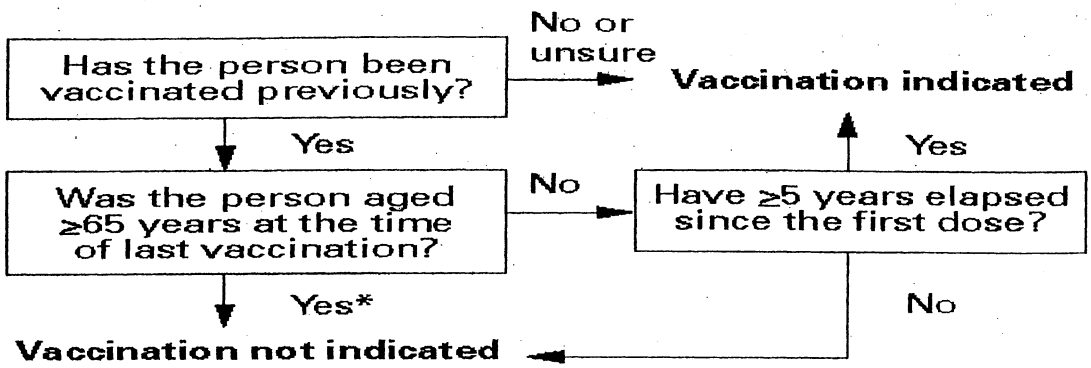

*Note: For any person who has received a dose of pneumococcal vaccine at age ≥65 years, revaccination is not indicated.

For further information, please go to the CDC Web site listed below: *http://www.cdc.gov/mmwr/preview/mmwrhtml/00047135.htm#00001211.gif.*

Facilities must assess residents for medical contraindications before immunizing them to prevent complications and adverse effects. ACIP recommendations (February 8, 2002) state, ''contraindications and precautions to vaccination dictate circumstances when vaccines must not be administered. The majority of contraindications and precautions are temporary, and the vaccination can be administered later. For example, persons with acute febrile conditions should not be immunized until their fever subsides. A medical contraindication is a condition in a recipient that increases the risk for a serious adverse reaction. For example, administering influenza vaccine to a person with an anaphylactic allergy to egg protein could cause serious illness in or death of the recipient.'' The ACIP recommendations further state that one universal contraindication applicable to all vaccines is a history of a severe allergic reaction after a prior dose of vaccine or vaccine constituent.

If immunization is medically contraindicated, ACIP recommendations (2002) state that prophylactic use of antiviral agents is an option for preventing influenza among these persons. Persons who have a history of anaphylactic hypersensitivity to vaccine components but who are also at high risk for complications from influenza can benefit from the vaccine after appropriate allergy evaluation and desensitization. The report on the ''Use of Standing Orders Programs to Increase Adult Vaccination Rates,'' in the March 24, 2000 MMWR, states that standing orders protocols should also specify that vaccines be administered by healthcare professionals trained to (a) screen patients for contraindications to vaccination, (b) administer vaccines, and (c) monitor patients for adverse events, in accordance with State and local regulations.

It is important for facilities to remember that residents have the right to refuse immunization. However, educating residents and family members regarding the benefits of receiving immunizations generally results in consent.

III. Collection of Information Requirements

Under the Paperwork Reduction Act of 1995, we are required to provide 60-day notice in the **Federal Register** and solicit public comment before a collection of information requirement is submitted to the Office of Management and Budget (OMB) for review and approval. In order to fairly evaluate whether an information collection should be approved by OMB, section 3506(c)(2)(A) of the Paperwork Reduction Act of 1995 requires that we solicit comment on the following issues:

- The need for the information collection and its usefulness in carrying out the proper functions of our agency.
- The accuracy of our estimate of the information collection burden.

• The quality, utility, and clarity of the information to be collected.

• Recommendations to minimize the information collection burden on the affected public, including automated collection techniques.

We are soliciting public comment on each of these issues for the following sections of this document that contain information collection requirements:

This proposed rule requires facilities to develop protocols or policies and procedures. As a facility develops and implements immunization protocols or procedures, we expect that obtaining previous immunization history on each resident, when possible, would be a part of the process. Additionally, we expect the facility to document in the resident's medical record information concerning immunization history, contraindications etc. as a part of the process of immunizing residents. For example, the facility must indicate in the resident's medical record that the resident had received an influenza immunization, or that the vaccination was medically contraindicated, or that the immunization was refused. If the immunization was refused, documentation must include that the resident or the resident's legal representative received appropriate education and consultation regarding the benefits of influenza immunization.

The initial burden associated with these requirements in the first year, would be related to the establishment of policies and protocols for implementation of the immunization rule. This would be approximately 5 hours of a registered nurse's time per facility *i.e.* 80,695 hours for the first year (5 hours × 16,139 facilities). In subsequent years, we estimate that the burden associated with documentation of the immunization status of the resident in the medical records would be approximately 5 minutes of the registered nurse's time, which would be 134,492 hours per year (5 minutes per resident × 100 residents per facility × 16,139 facilities.

If you comment on these information collection and recordkeeping requirements, please mail copies directly to the following:

Centers for Medicare & Medicaid Services, Office of Strategic Operations and Regulatory Affairs, Regulations Development Group, Attn: Jim Wickliffe, CMS–3198–P, Room C4–26–05, 7500 Security Boulevard, Baltimore, MD 21244–1850; and

Office of Information and Regulatory Affairs, Office of Management and Budget, Room 10235, New Executive Office Building, Washington, DC 20503, Attn: Christopher Martin, CMS Desk Officer, CMS–3198–P, *Christopher Martin@omb.eop.gov*. Fax (202) 395–6974.

IV. Response to Comments

Because of the large number of public comments we normally receive on **Federal Register** documents, we are not able to acknowledge or respond to them individually. We will consider all comments we receive by the date and time specified in the **DATES** section of this preamble, and, when we proceed with a subsequent document, we will respond to the comments in the preamble to that document.

V. Waiver of the 60-day Comment Period

We ordinarily publish a notice of proposed rulemaking in the **Federal Register** and invite public comment on the proposed rule. The notice of proposed rulemaking includes a reference to the legal authority under which the rule is proposed, and the terms and substance of the proposed rule or a description of the subjects and issues involved. In accordance with section 1871(b)(1) of the Act, we routinely allow a comment period of at least 60 days on proposed rules that affect the Medicare program. This procedure can be waived; however, if an agency finds good cause that a 60-day comment period is impracticable, unnecessary, or contrary to the public interest, and incorporates a statement of the finding and its reasons in the rule issued. In accordance with section 1871(b)(2)(C) of the Act, we have shortened the comment period for this proposed rule from 60 to 15 days to allow us to hopefully finalize these provisions by October 1, 2005 in time for the 2005–2006 flu season. It is our view that a 60 day delay in receiving public comments on this proposed rule and publishing the subsequent final rule will be extremely detrimental to the health of nursing home residents, as epidemics of influenza typically occur during the winter months and are responsible for an average of approximately 20,000 to 40,000 deaths per year in the United States. Influenza viruses also can cause pandemics, during which rates of illness and death from influenza-related complications can increase dramatically. Rates of infection are highest among children, but rates of serious illness and death are highest among persons 65 and older and persons of any age who have medical conditions that place them at increased risk for complications from influenza and pneumonia. Vaccines are the most effective means to protect against many complications related to influenza and pneumonia. The ACIP recommendations for 2004 to 2005, to decrease the risk of influenza, state that the optimal time for influenza vaccinations is October through November. If this proposed rule is published with a 60-day comment period it is highly unlikely that a final rule can be issued before October, and even if that were possible, nursing facilities would not have the lead time necessary to obtain resident and/or family consent. If expedited and published with a 15-day comment period, this delay can be prevented and the rule can be effective in the 2005–2006 flu season, with the potential of saving many lives.

We anticipate that the affect of this rule will be to increase immunization rates in nursing homes to 90 percent, which is the Healthy People 2010 goal. This will enable about half a million frail elderly individuals who are not currently immunized to be immunized. The CMS/CDC standing orders project in 2003 found that in nursing home residents, influenza vaccine is associated with a 27–35 percent reduction in mortality, and a 44–52 percent reduction in all-cause hospitalizations. Similarly, pneumococcal vaccination is associated with a 20–26 percent reduction in mortality, and a 12–28 percent reduction in all-cause hospitalization. We recognize that these associations are not necessarily causal because the data are cross-sectional with no correction for confounding variables. However, the findings are consistent with findings regarding immunization in the general population. Therefore, it is imperative that this proposed rule is published with a 15-day comment period so that a final rule can be published and effective in the 2005–2006 flu season. Even though pneumococcal vaccines can be administered throughout the year, the percentage of patients and residents immunized remains low. Therefore, this proposed rule would be a vehicle to improve immunization rates and would be consistent with the Healthy People 2010 objectives.

We believe that a continued delay in implementation of this rule would greatly hinder increased immunization of residents in LTC facilities before the onset of this year's influenza season. We conclude that, in this instance, a 60-day comment period is unnecessary and contrary to public interest. We find on this basis, that there is good cause for waiving the 60-day comment period under section 1871(b)(2)(C) of the Act.

VI. Regulatory Impact

(If you choose to comment on issues in this section, please include the caption ''Impact Analysis'' at the beginning of your comment.)

A. Overall Impact

We have examined the impacts of this rulemaking as required by Executive Order 12866 (September 1993, Regulatory Planning and Review), the Regulatory Flexibility Act (RFA) (September 19, 1980, Pub. L. 96–354), section 1102(b) of the Social Security Act, Executive Order 13132 (August 4, 1999, Federalism), the Unfunded Mandates Reform Act of 1995 (Pub. L. 104–4), and the Congressional Review Act (5 U.S.C. 804(2)).

Executive Order 12866 directs agencies to issue regulations only after consideration of all costs and benefits of available regulatory alternatives and, if regulation is necessary, to select regulatory approaches that maximize net benefits (including potential economic, environmental, public health and safety effects, distributive impacts, and equity). A regulatory impact analysis (RIA) must be prepared for rules with economically significant effects ($100 million or more in any 1 year). This proposed rule is an economically ''significant regulatory action'' as defined by section 3(f) of Executive Order 12866, and a ''major rule'' as defined in the Congressional Review Act. We have reached this conclusion because of the substantial life-saving effects of the rule and its anticipated reduction in the medical costs associated with influenza and pneumonia. We believe that there are no significant costs associated with this proposed rule. It would not impose any mandates on State, local, or tribal governments, or the private sector that would result in an expenditure of $100 million in any given year. Since most program participants comply with the statutory and regulatory requirements making unnecessary the imposition of termination from Medicare, Medicaid and, where applicable, other Federal health care programs, and since Medicare generally pays the cost of the vaccines that are the subject of this rule we do not anticipate more than a minimal economic impact on nursing facilities as a result of this proposed rule. There is a cost to the Medicare program for the vaccines to the extent that they are provided to Medicare beneficiaries, as discussed below.

As previously discussed in this preamble, this proposed rule would have a substantial life-saving effect. We have developed estimates of these life-saving effects, along with estimated changes in medical care costs, and present these estimates and the assumptions on which they are based in the discussion and table that follows.

Influenza

Assumptions (Benefit)

There are approximately 2 million residents in LTC facilities. Sixty-five percent had documentation stating they received influenza immunization per the 1999 National Nursing Home Survey, National Center for Health Statistics, CDC. An October, 2000 article in the Journal of American Geriatric Society ''Influenza outbreak detection and control measures in nursing homes in the United States (Zadeh MM, Buxton Bridges C, Thompson WW, Arden NH, Fukuda K.)'' indicated that 83 percent of LTC residents in the study received immunizations. The midpoint between the two reports is 74 percent. The projected immunization rate after regulation implementation is 90 percent.

The 2005 influenza vaccination administration reimbursement rate is $18 (unweighted average of Medicare ''National Flu Biller Administration Codes''). The 2005 Influenza vaccine reimbursement rate is $10.10 (Medicare rate; 95 percent of Average Wholesale Price (AWP). There is a wide variation in the influenza rate year to year, due to the prevalent strains of influenza virus each influenza season and the degree to which the vaccine matches prevalent strains as well as other factors. Effectiveness of Influenza vaccine for preventing influenza illness is 30–40 percent according to ACIP (Harper SA, Fukuda K, Uyeki TM, Cox NJ, Bridges CB; Prevention and control of influenza: recommendations of the ACIP. MMWR Recomm Rep. 2004 May 28; 53(RR–6):1–40).

As stated above, the rate of hospitalization for the LTC population among those ill with influenza is 25 percent (Arden NH, *et al.*). The influenza vaccine is 50–60 percent effective in preventing hospitalization due to influenza in the LTC population (ACIP, May 2004).

According to (Arden NH, *et al.*) the case-fatality for influenza disease in the LTC population is 10 percent of the number of residents who become ill with influenza. The influenza vaccine is 80 percent effective in preventing death in LTC residents with influenza illness (ACIP, May 2004). The average Medicare cost per hospital discharge for influenza is $8,500 per the Office of the Actuary, CMS (including medical education, disproportionate share and other pass through). The data on the influenza related hospitalization of SNF residents is not available. SNF residents are short term stay therefore we do not think those numbers are sufficiently large to have a great impact on the overall Medicare costs.

TABLE 1.—ESTIMATED FEDERAL BENEFITS DUE TO INCREASED RATE OF INFLUENZA IMMUNIZATIONS

LTC Residents	Current	Projected	Difference
% who receive influenza immunization	74%	90%	16%
Number who receive influenza immunization	1,480,000	1,800,000	320,000
Number ill with influenza	133,380	123,300	(10,080)
Number hospitalized due to influenza	20,358	15,030	(5,328)
Number who die from influenza complications	7,344	5,040	(2,304)
Direct Medicare cost of inpatient hospital treatment	$173,043,000	$127,755,000	($45,288,000)

Assumptions (Cost)

Influenza vaccine must be administered annually: however, virtually all influenza vaccinations administered in LTC facilities are covered under the Medicare Part B program. The cost to Medicare for provision of the influenza vaccinations is equal to the cost of the vaccines plus administration costs. In addition to these direct Medicare costs, an indirect Federal cost would be incurred from reduced savings in the Medicaid program. For every hospitalization of a LTC facility resident, Medicaid saves $1,000 for nursing home care not provided while the resident is in the hospital. The weighted average of the Federal contribution to Medicaid is 57 percent (Office of the Actuary, CMS), and Medicaid is a primary source of payment for 40 to 59 percent of LTC facility residents (1999 National Nursing

Home Survey) and with a mid point of 50 percent. The total federal cost related to the increased influenza immunizations is the total of the direct Medicare costs combined with the lost savings to Medicaid.

TABLE 2.—ESTIMATED FEDERAL IMPACT OF INCREASED INFLUENZA IMMUNIZATION ON MEDICARE AND MEDICAID

	Current ($)	Projected ($)	Difference
Total Medicare reimbursement for cost of influenza vaccine and administration (320,000 × $28.10)	41,588,000	50,580,000	$8,992,000
Federal share of Medicaid LTC facility savings due to resident hospital stays.*	(5,802,030)	(4,283,550)	$1,518,480
Total Federal Costs	35,785,970	46,296,450	$10,510,480

* (Number of residents hospitalized) × ($1000 cost for NH facility per hospitalization) × (57% Federal portion of Medicaid payments) × (50% portion of all NH patients paid by Medicaid)

TABLE 3.—NET FEDERAL SAVINGS DUE TO INCREASED INFLUENZA IMMUNIZATION

Estimated Federal Savings (from Table 1)	($45,288,000)
Estimated Federal Costs (from Table 2)	$10,510,480
Total Net Federal Savings	($34,777,520)
Lives saved per year	2,304

In other rules, we have used an average value of a statistical life of $5 million to monetize the decreased mortality benefits of the rule. The population affected by this rule has different demographic and other characteristics from the populations that were addressed in these other rules. However, due to the lack of data on this specific population and in order to be consistent with previous rules, we are assuming a value of $5 million for the average value of a statistical life for this rule.

Therefore, since we estimate 2,304 lives will be saved by the influenza vaccination, we estimate the value saved from saving these lives as $11.52 billion.

Invasive Pneumococcal Disease

Assumptions (Benefit)

There are approximately 2 million residents in LTC facilities. The projected immunization rate after regulation implementation is 90 percent. The LTC resident vaccination rate is estimated between 39 percent (1999 National Nursing Home Survey (NNHS)) and 56 percent (community rate, 2003 National Health Interview Survey). Virtually all residents with invasive disease are hospitalized. The rate of pneumococcal invasive disease in unvaccinated persons aged greater than or equal to 65 equals 52–85/100 000, (ACIP, 1997). The case fatality ratio of invasive pneumococcal disease in persons aged greater than or equal to 65 (despite appropriate medical treatment) is 30–40 percent. The average cost per hospital discharge for invasive pneumococcal disease is $8500 (Including medical education, disproportionate share and other pass through) (Office of the Actuary, CMS). According to CDC recommendations, usually one dose of the pneumococcal polysaccharide vaccine (PPV) is all that is needed, for a person only needs to be immunized once in a life time. However, in some situations a second dose is recommended for people 65 and older. Therefore, expense related to this rule is projected to cost more at the beginning period of implementation.

The 45 percent documented immunization rate in the table below represents data obtained in the year 1999, and since then the rate may have increased. Implementing the influenza immunization process is more challenging than implementing the similar PPV immunization process. Pneumococcal immunizations can be given all through the year without time constraints and the vaccine supplies have not been an issue. We anticipate that implementation of this rule would result in increase in immunization rate and documentation of the related data for future comparison. The table below is relating the years 1–5 to the current data.

Invasive Pneumococcal Disease

Assumptions (Benefit)

TABLE 4.—ESTIMATED FEDERAL BENEFITS DUE TO INCREASED RATE OF PNEUMOCOCCAL IMMUNIZATIONS

LTC Residents	Current year	Projected				
		Year 1	Year 2	Year 3	Year 4	Year 5
Percent who receive pneumococcal immunization	45%	70%	75%	80%	85%	90%
Number who receive pneumococcal immunization per year		500,000	100,000	100,000	100,000	100,000
Cumulative number immunized (since inception of Medicare pneumococcal immunization benefits)	900,000	1,400,000	1,500,000	1,600,000	1,700,000	1,800,000
Number who develop invasive pneumococcal disease	970	742	697	651	606	560
Deaths from invasive pneumococcal disease (or complications related to the disease)						
Benchmark—number deaths without increased immunizations	340	340	340	340	340	340
Number deaths following implementation of immunization regulation		260	244	228	212	196
Number lives saved due to pneumococcal immunization		80	96	112	128	144

TABLE 4.—ESTIMATED FEDERAL BENEFITS DUE TO INCREASED RATE OF PNEUMOCOCCAL IMMUNIZATIONS—Continued

LTC Residents	Current year	Projected				
		Year 1	Year 2	Year 3	Year 4	Year 5
Direct Federal costs for treatment of invasive pneumococcal disease						
Benchmark—costs without increased immunizations	$8,246,190	$8,246,190	$8,246,190	$8,246,190	$8,246,190	$8,246,190
Costs following implementation of immunization regulation		$6,310,740	$5,923,650	$5,536,650	$5,149,470	$4,762,380
Savings following implementation of increased pneumococcal immunizations		($1,935,450)	($2,322,540)	($2,709,540)	($3,096,720)	($3,483,810)

Assumptions (Cost)

The 2005 pneumococcal vaccination administration reimbursement rate is $18 (unweighted average of Medicare ''National Flu Biller Administration Codes'') and the pneumococcal vaccine reimbursement rate is $23.28 (Medicare rate; 95% of AWP). The pneumococcal vaccine is generally administered once per beneficiary lifetime. Therefore this is not a recurring cost, but would cost more up front to give lifetime immunity to residents (for the cost estimate, we assumed 500,000 people would receive the vaccine in the first year and 100,000 people each would receive the vaccine in years two through five). The reason we assume the higher number the first year is because we expect all the eligible residents in the facilities in the first year would receive the pneumococcal vaccine. In the following years only the new residents who are eligible would need the immunization. Virtually all pneumococcal immunizations administered in LTC facilities are covered under the Medicare Part B program. For every hospitalization concerning Medicaid beneficiaries, Medicaid saves $1000 for nursing home care not provided while the resident is in the hospital. The weighted average of the Federal contribution to Medicaid is 57 percent (Office of the Actuary, CMS). Medicaid is a primary source of payment for 40 to 59 percent in LTC (1999 National Nursing Home Survey) and the mid point is 50 percent. The total Federal cost related to the increased pneumococcal immunizations is the total of the direct Medicare reimbursement costs combined with the lost savings to Medicaid.

TABLE 5.—FEDERAL IMPACT OF INCREASED PNEUMOCOCCAL IMMUNIZATION ON MEDICARE AND MEDICAID

	Current year ($)	Projected ($)				
		Year 1	Year 2	Year 3	Year 4	Year 5
Medicare reimbursement for cost of pneumococcal vaccine and administration						
Annual Medicare cost following increased pneumococcal immunization*		20,640,000	4,128,000	4,128,000	4,128,00	4,128,000
Cumulative Medicare cost (since inception of Medicare pneumococcal immunization benefits)	37,152,000	57,792,000	61,920,000	66,048,000	70,176,000	74,304,000
Federal share of Medicaid LTC facility savings due to resident hospital stays						
Federal savings per year without increased immunizations**	(276,490)	(276,490)	(276,490)	(276,490)	(276,490)	(276,490)
Federal savings per year following increased pneumococcal immunization**		(211,595)	(198,617)	(185,638)	(172,659)	(159,680)
Lost Federal savings due to increased pneumococcal immunization		64,895	77,874	90,852	103,831	116,810
Total Federal Costs (annual Medicare costs + lost Federal savings)	Not Available	20,704,895	4,205,874	4,218,852	4,231,831	4,244,810

* Year 1 (500,000 × $41.28); Years 2–5 (100,000 × $41.28).

** (Number of residents hospitalized) × ($1000 cost for NH facility per hospitalization) × (57% Federal portion of Medicaid payments) × (50% portion of all NH patients paid by Medicaid).

TABLE 6.—NET FEDERAL COSTS DUE TO INCREASED PNEUMOCOCCAL IMMUNIZATION

Year 1	
Estimated Federal Savings (from Table 4)	($1,935,450)
Estimated Federal Costs (from Table 5)	20,704,895
Total Net Federal Cost in Year 1	18,769,445

TABLE 6.—NET FEDERAL COSTS DUE TO INCREASED PNEUMOCOCCAL IMMUNIZATION—Continued

Years 2–5 Estimated Federal savings (from table 4) + Estimated Federal costs (from table 5)	
Total Net Federal Cost in Year 2 ($2,322,540) + 4,205,874	$1,883,334
Total Net Federal Cost in Year 3 ($2,709,540) + 4,218,852	1,509,312
Total Net Federal Cost in Year 4 ($3,096,720) + 4,231,831	1,135,111
Total Net Federal Cost in Year 5 ($3,483,810) + 4,244,810	761,000
Total Net Federal Cost Years 1–5	24,058,202
Lives saved Years 1–5	560

Using the same $5 million per life value of a statistical life as before and since we estimate 560 lives will be saved by the pneumococcal vaccination, we estimate the value saved from saving these lives as $2.8 billion.

For the purpose of this analysis we have considered the protective effects of influenza and pneumococcal immunization individually. However, the combined effect of both immunizations is additive in preventing hospitalization and deaths. The July 30, 1999 article in the journal ''Vaccine'' titled ''The additive benefits of pneumococcal vaccinations during influenza seasons among elderly persons with chronic lung disease'' reports that both vaccinations together demonstrated additive benefit as there was a 65 percent reduction in hospitalization for pneumonia and 81 percent reduction in death versus the situation when neither had been received. Also excluded in this analysis is the increased protection against influenza infection afforded by the ''herd'' effect after 80 to 90 percent of residents are immunized against influenza. The 2003, CMS/CDC standing orders project report states that a facility-level influenza vaccination of 80 percent and more of residents may be independently associated with reduced patient hospitalization and death. Further, the cost-saving effects of this rule, and the costs of the vaccine doses themselves, are respectively benefits and costs to the taxpayer. Since Medicare pays virtually all medical, hospital, and (starting in 2006) drug costs for this population, the expected savings from reduced hospitalizations would largely accrue to the Federal budget.

In order to comply with this rule, facilities will develop the necessary policies and procedures which will be followed by staff as a standard practice. We estimate the time and cost related to this process in the following tables:

POLICY AND PROCEDURE IMPLEMENTATION RELATED TO THE IMMUNIZATION RULE

[This is only a one time expense for the facilities]

No. of LTC facilities	Hours spent per facility	Total burden hours	Total cost per agency
16,139	5 hours first year only	80,695 hours only first year	80,695 hours × $23.70 * = $1,912,471.

* $23.70 is the average salary of a registered nurse as per U.S. Department of Labor (*http://www.bls.gov/oes/current/oes291111.htm#nat*).

This rule proposes that the resident's immunization status be documented in the resident's medical record therefore, the following table presents the estimated time and cost related to the implementation of this process.

DOCUMENTATION TIME FOR BOTH IMMUNIZATIONS

[These expenses are annual]

No. of LTC facilities	Hours spent per resident per facility	Total burden hours	Total cost per agency
16,139	16,139 × 100 ** residents × 5 minutes = 8,069,500 minutes 134,492 hours.	134,492 hours	134,492 hours × $23.70 * = $3,187,460.

* $23.70 is the average salary of a registered nurse as per U.S. Department of Labor (*http://www.bls.gov/oes/current/oes291111.htm#nat*).
** 100 is the average number of residents in each facility.

The RFA (15 U.S.C. 603(a)), as modified by the Small Business Regulatory Enforcement Fairness Act of 1996 (SBREFA) (Pub. L. 104–121), requires agencies to determine whether proposed or final rules would have a significant economic impact on a substantial number of small entities and, if so, to identify in the notice of proposed rulemaking or final rulemaking any regulatory options that could mitigate the impact of the proposed regulation on small businesses. For purposes of the RFA, small entities include small businesses, nonprofit organizations, and small government jurisdictions. Most nursing facilities are small entities, either by nonprofit status or by having revenues of $11.5 million or less annually (the applicable size standard of the Small Business Administration). Individuals and States are not included in the definition of a small entity, and other medical care providers are not affected by this proposed rule except indirectly, through reduced utilization of care by individuals who do not, but would otherwise, require hospitalization.

In addition, section 1102(b) of the Act requires us to prepare a regulatory impact analysis if a rule may have a significant impact on the operations of a substantial number of small rural hospitals. This analysis must conform to the provisions of section 604 of the RFA. For purposes of section 1102(b) of the Act, we define a small rural hospital as a hospital that is located outside of

a Metropolitan Statistical Area and has fewer than 100 beds. We do not believe a regulatory impact analysis is required here because, for the reasons stated above, this proposed rule would not have a significant impact on the operations of a substantial number of small rural hospitals.

Section 202 of the Unfunded Mandates Reform Act of 1995 also requires that agencies assess anticipated costs and benefits before issuing any rule whose mandates may result in expenditure in any 1 year by State, local, or tribal governments, in the aggregate, or by the private sector, of $100 million in 1995 dollars. This proposed rule would impose no mandates on State, local, or tribal governments. As indicated elsewhere in this analysis, costs mandated on nursing facilities, are minimal, and do not remotely approach this threshold.

Executive Order 13132 on Federalism establishes certain requirements that an agency must meet when it publishes a proposed rule (and subsequent final rule) that imposes substantial direct requirement costs on State and local governments, preempts State law, or otherwise has Federalism implications. We have determined that this proposed rule would not significantly affect the rights, roles, or responsibilities of the States. This proposed rule would not impose substantial direct requirement costs on State or local governments, preempt State law, or otherwise implicate federalism.

B. Anticipated Effects

1. Effects on LTC facilities

Based on the various studies and reports referenced earlier in the preamble, we expect that LTC facilities would benefit from the implementation of this proposed rule. The various studies discussed are evidence that prevention of influenza and pneumonia would lower the level of acuity, staff time and other expenses resulting in cost reductions.

2. Effects on Beneficiaries

The influenza vaccine is 50–60 percent effective in preventing hospitalization due to influenza in the LTC population and increased immunizations are expected to improve health overall for the age group of 65 years and older. As estimated above 2,304 lives may be saved annually when residents receive influenza immunizations.

According to CDC's Active Bacterial Core Surveillance for pneumococcal disease, approximately 5,700 deaths from invasive pneumococcal disease (bacteremia and meningitis) are estimated to have occurred in the United States in 2002. The October 1997 Journal of the American Medical Association (JAMA) article ''Cost-Effectiveness of Vaccination Against Pneumococcal Bacteremia Among Elderly People'' indicated that vaccination of elderly people against pneumococcal bacteremia is one of the few interventions that have been found to both improve health and save medical costs.

3. Effects on the Medicare and Medicaid Programs

The reports from the January 2000, CMS's Adult Immunization Project, indicates that ''despite the fact that influenza and pneumococcal vaccines are clinically effective, cost-effective, and are Medicare Part B covered benefits, they remain underutilized.'' Increased immunizations are expected to reduce the medical expenses and improve health overall for the age group of 65 years and older as reported in the Oct, 1997 JAMA article referenced earlier. As stated above, the rate of hospitalization for the LTC population among those ill with influenza is 25 percent (Arden NH, et. al.). The average cost per hospital discharge for influenza is $8,500 per the Office of the Actuary, CMS. The influenza vaccine is 80 percent effective in preventing death in the LTC population (ACIP, May 2004). As estimated above the net saving would be $34,777,520 and 2,304 lives saved when residents receive influenza immunizations. The net cost related to pneumococcal immunizations is estimated to be $ 18,821,360 the first year of implementation and $ 3,753,887 in the following two to five years and 143 lives saved.

C. Alternatives Considered

We considered other alternatives regarding immunizing residents.

1. One alternative would be to keep the present rules, as they are written. The current regulations, however, have thus far not been effective at assisting us in increasing the rate of immunization of institutionalized residents to 90 percent. Despite the Federal government's unified efforts to increase the availability of safe and effective vaccines, and despite substantial progress in reducing many vaccine-preventable diseases, at-risk individuals are not receiving influenza and pneumococcal vaccines. Section 4107 of the Balanced Budget Act of 1997 extended the influenza and pneumococcal immunization campaign being conducted by CMS in conjunction with CDC and the National Coalition for Adult Immunization through fiscal year 2002, authorizing $8 million for each fiscal year from 1998 to 2002. Although Medicare reimbursement for influenza and pneumococcal immunizations was increased under this legislation, rates of immunization did not improve as anticipated.

2. Another alternative would be to educate providers on the value of influenza and pneumococcal vaccines without rule making. However, as discussed in studies cited earlier in this rule, this has not been effective in improving immunization rates.

D. Conclusion

Increasing the utilization of cost-effective preventive services is the goal of both CMS and CDC, and this proposed rule would facilitate the delivery of appropriate vaccinations in a timely manner, increase the levels of vaccination rate, and decrease the morbidity and mortality rate of influenza and pneumococcal diseases. As a result, the economic effects of the rule are substantial and overwhelmingly beneficial. In accordance with the provisions of Executive Order 12866, the Office of Management and Budget reviewed this proposed rule.

List of Subjects in 42 CFR Part 483

Grant programs—health, Health facilities, Health professions, Health records, Medicaid, Medicare, Nursing homes, Nutrition, Reporting and recordkeeping requirements, Safety.

For the reasons set forth in the preamble, the Centers for Medicare & Medicaid Services amends 42 CFR chapter IV as set forth below:

PART 483—REQUIREMENTS FOR STATES AND LONG TERM CARE FACILITIES

1. The authority citation for part 483 continues to read as follows:

Authority: Secs. 1102 and 1871 of the Social Security Act (42 U.S.C. 1302 and 1395hh).

Subpart B—Requirements for Long Term Care Facilities

2. Section § 483.25 is amended by adding paragraph (n) to read as follows:

§ 483.25 Quality of care.

* * * * *

(n) *Influenza and pneumococcal immunizations*—(1) *Influenza.* The facility must ensure that—

(i) Each resident is offered an influenza immunization between October 1 through March 31 annually, unless the immunization is medically contraindicated or the resident has

already been immunized during this time period; and

(ii) The resident or the resident's legal representative must be provided the opportunity to refuse immunization. If the resident or the resident's legal representative refuses immunization, the facility must ensure the resident or the resident's legal representative receives appropriate education and consultation regarding the benefits of influenza immunization.

(iii) The resident's immunization status is documented in the resident's medical record, including but not limited to; that the resident received an influenza immunization, or immunization was medically contraindicated, or immunization was refused. If the immunization was refused, documentation must include that the resident or the resident's legal representative received appropriate education and consultation regarding the benefits of influenza immunization.

(2) *Pneumococcal disease.* The facility must ensure that—

(i) Each resident is offered a *pneumococcal immunization,* unless the immunization is medically contraindicated or the resident has already been immunized; and

(ii) The resident or the resident's legal representative must be provided the opportunity to refuse immunization. If the resident or the resident's legal representative refuses immunization, the facility must ensure the resident or the resident's legal representative receives appropriate education and consultation regarding the benefits of *pneumococcal* immunization.

(iii) The resident's immunization status is documented in the resident's medical record, including but not limited to; that the resident received *pneumococcal immunization,* or immunization was medically contraindicated, or immunization was refused. If the immunization was refused, documention must include that the resident or the resident's legal representative received appropriate education and consultation regarding the benefits of *pneumococcal* immunization.

(iv) *Exception.* As an alternative, based on an assessment and practitioner recommendation, a second pneumococcal shot may be given after 5 years following the first pneumococcal immunization if the vaccine was administered before age 65, unless medically contraindicated or the resident or the resident's legal representative refuses the second shot.

(Catalog of Federal Domestic Assistance Program No. 93.778, Medical Assistance Program)

(Catalog of Federal Domestic Assistance Program No. 93.773, Medicare—Hospital Insurance; and Program No. 93.774, Medicare—Supplementary Medical Insurance Program)

Dated: May 20, 2005.

Mark B. McClellan,

Administrator, Centers for Medicare & Medicaid Services.

Approved: August 10, 2005.

Michael O. Leavitt,

Secretary.

[FR Doc. 05–16160 Filed 8–12–05; 8:45 am]

BILLING CODE 4120–01–P

DEPARTMENT OF TRANSPORTATION

Maritime Administration

46 CFR Part 389

[Docket No. MARAD–2005–22050]

RIN 2133–AB67

Determination of Availability of Coastwise-Qualified Launch Barges

AGENCY: Maritime Administration, DOT.

ACTION: Notice of proposed rulemaking.

SUMMARY: The Maritime Administration (MARAD, we, our, or us) is publishing this proposed rulemaking to establish regulations governing administrative determinations of availability of coastwise-qualified launch barges to be used in the transportation and launching of offshore oil drilling or production platform jackets in specified projects. This rulemaking implements provisions of the Coast Guard and Maritime Transportation Act of 2004, which, among other things, requires the Secretary of Transportation (acting through the Maritime Administrator) to adopt procedures to determine if coastwise-qualified vessels are available for platform jacket transport and launching, and, if not, to allow the use of non-coastwise qualified foreign built vessels.

DATES: Comments are due by October 14, 2005.

ADDRESSES: You may submit comments [identified by DOT DMS Docket Number MARAD–2005–22050] by any of the following methods:

- Web Site: *http://dms.dot.gov.* Follow the instructions for submitting comments on the DOT electronic docket site.
- Mail: Docket Management Facility; U.S. Department of Transportation, 400 7th St., SW., Nassif Building, Room PL–401, Washington, DC 20590–001.
- Hand Delivery: Room PL–401 on the plaza level of the Nassif Building, 400 7th St., SW., Washington, DC, between 9 a.m. and 5 p.m., Monday through Friday, except Federal holidays.
- Federal eRulemaking Portal: Go to *http://www.regulations.gov.* Follow the online instructions for submitting comments.

Instructions: All submissions must include the agency name and docket number for this rulemaking. Note that all comments received will be posted without change to *http://dms.dot.gov* including any personal information provided. Please see the Privacy Act heading under Regulatory Notices.

Docket: For access to the docket to read background documents or comments received, go to *http://dms.dot.gov* at any time or to Room PL–401 on the plaza level of the Nassif Building, 400 7th St., SW., Washington, DC, between 9 a.m. and 5 p.m., Monday through Friday, except Federal holidays.

FOR FURTHER INFORMATION CONTACT: Michael Hokana, Office of Ports and Domestic Shipping, Maritime Administration, MAR–830, Room 7201, 400 7th St., SW., Washington, DC 20590; telephone: (202) 366–0760; email: *Michael.Hokana@dot.gov.*

SUPPLEMENTARY INFORMATION: Section 27 of the Merchant Marine Act of 1920, commonly known as the Jones Act (46 App. U.S.C. 883), requires, with a few exceptions, that all cargo transported in the coastwise trade be carried on ships that are U.S.-owned and U.S.-built. The Jones Act has been amended over the years, and in 1988 a special technical proviso, known as the thirteenth proviso, was added to allow for the use of foreign-built platform jacket launch barges in the coastwise trade if no U.S.-built vessels were found to be available.

On August 9, 2004, the thirteenth proviso of the Jones Act was amended by section 417 of the Coast Guard and Maritime Transportation Act of 2004, Public Law 108–293 (the Act). Under the Act, the Secretary of Transportation is directed to establish procedures to issue determinations as to whether suitable U.S.-built barges are available for use in transportation and launching (i.e., installation) of offshore oil drilling or production structures. The Act directs that if the Secretary determines, upon application by the owner/operator of a foreign-built barge, that a suitable U.S.-built barge is not reasonably available for use in a specified launch project, then the foreign-built barge may be used. Because the Bureau of Customs and Border Protection (CBP) is responsible for enforcing violations of the coastwise laws, MARAD recommends that applicants that receive a determination from MARAD further

obtain a ruling regarding the use of the thirteenth proviso of the Jones Act from CBP before proceeding with their transportation and launch projects.

Program Description

In this rulemaking, MARAD is proposing procedures to be followed in order to apply for U.S.-flag availability determinations for the specialized ''platform jacket'' launch market. ''Platform jacket'' refers to a single physical component and includes any type of offshore exploration, development, or production structure or component thereof, including platform jackets, tension leg or SPAR platform superstructures (including the deck, drilling rig and support utilities, and supporting structure), hull (including vertical legs and connecting pontoons or vertical cylinder), tower and base sections of a platform jacket, jacket structures, and deck modules (known as ''topsides'').

For each proposed project, MARAD will publish a notice of application in the **Federal Register** and will provide the appropriate references to the DOT Docket Management System where applications will be available for public review and comment. Each application must include the engineering details (specifying the need for a vessel with a launch capacity of 12,000 long tons or more) and the timing requirements (establishing an approximate date and time window for the launch). MARAD will request that comments and information on the availability of coastwise-qualified vessels be submitted within thirty (30) days after publication of the initial notice of application. If MARAD does not receive information within the thirty (30) day comment period indicating that a suitable coastwise-qualified vessel is available for the project, or if MARAD receives such information, but determines that the vessel is not suitable or is not reasonably available for the project, then MARAD will issue a determination indicating the non-availability of a coastwise-qualified barge. Determinations will be issued within ninety (90) days from the date the initial notice of application is published in the **Federal Register.**

Because launch barges have long lead times for construction, applicants are encouraged to provide the Maritime Administration and the public with as much notice as possible in advance of their projects. Early notification will help ensure the maximum utilization of coastwise-qualified vessels, and will assist the Maritime Administration in its review process. The ideal time for providing notification is when the need for the installation of a platform jacket is identified. For instance, transportation plans for launch projects are typically arranged when application is made to the Minerals Management Service for use of an offshore portion of the outer continental shelf, which is typically years in advance of a launch project.

The Maritime Administration recognizes that advance notice of projects may increase the U.S. presence in the launch barge industry, as companies would be more likely to build barges to meet known market demands. MARAD welcomes suggestions, in addition to comments on the proposed regulation, regarding how to increase the utilization of U.S.-flag launch barges and is interested in hearing from the public on how it may facilitate the flow of information regarding early notification of projects so that the U.S. launch barge industry may effectively respond to projected needs.

Application Fee

Title V of the Independent Offices Appropriations Act of 1952 (''IOAA''; 31 U.S.C. 9701) authorizes Federal agencies to establish and collect user fees. The statute provides that each service or thing of value provided by an agency should be self-sustaining to the extent possible, and that each charge shall be fair and based on the costs to the Government, the value of the service or thing to the recipient, the policy or interest served, and other relevant factors. 31 U.S.C. 9701.

The primary guidance for implementation of the IOAA is Office of Management and Budget (OMB) Circular No. A–25 (''User Charges,'' July 8, 1993). Circular A–25, section 6, directs agencies to assess user charges against identifiable recipients for special benefits derived from Federal activities beyond those received by the general public. Circular A–25 further directs agencies, with limited exceptions, to recover the full cost of providing a Government service from the direct recipients of special benefits. Section 6(d) of Circular A–25 defines ''full cost'' as including ''all direct and indirect costs to any part of the Federal Government of providing a good, resource, or service.''

Pursuant to these directives, MARAD is proposing to set the application fee for administrative determination of availability at $16,460.00. Because determinations of availability under part 389 represent special benefits to identifiable recipients (i.e., vessel owners) that are beyond the benefits and services normally received by the general public, the IOAA and Circular A–25 direct MARAD to assess user fees for providing this service.

Following the principles embodied in Circular A–25, MARAD estimates the costs associated with processing and issuing determinations under part 389 as follows. The main cost components of the program include direct and indirect personnel costs and **Federal Register** publication costs. MARAD estimates that average personnel costs for processing each application will be $15,995.00. The second main cost component of the program will be the cost of publishing notices of applications in the **Federal Register.** The current **Federal Register** publication cost is $155 per column and the average length of a public notice published for this program is estimated to be three columns. Thus, the total average publication cost will be $465.00. The total of personnel costs and **Federal Register** publication costs is estimated to be $16,460.00.

Rulemaking Analyses and Notices

Executive Order 12866 and DOT Regulatory Policies and Procedures

This rulemaking is not significant under section 3(f) of Executive Order 12866, and as a consequence, OMB did not review the rule. This rulemaking is also not significant under the Regulatory Policies and Procedures of the Department of Transportation (44 FR 11034; February 26, 1979). It is also not considered a major rule for purposes of congressional review under Public Law 104–121. MARAD believes that the economic impact of this rulemaking is so minimal as to not warrant the preparation of a full regulatory evaluation. This rulemaking merely establishes procedures to determine if a coastwise-qualified barge is available for use in a project and, if not, to allow the use of a non-coastwise qualified barge.

Executive Order 13132

We analyzed this rulemaking in accordance with the principles and criteria contained in Executive Order 13132 (''Federalism'') and have determined that it does not have sufficient federalism implications to warrant the preparation of a federalism summary impact statement. The regulations herein have no substantial effects on the States, the current Federal-State relationship, or the current distribution of power and responsibilities among local officials. Therefore, MARAD did not consult with State and local officials because it was not necessary.

Regulatory Flexibility Act

The Regulatory Flexibility Act requires MARAD to assess the impact that regulations will have on small entities. After analysis of this proposed rule, the Maritime Administrator certifies that this proposed rule will not have a significant economic impact on a substantial number of small entities. We anticipate that few, if any, small entities will participate in this process due to the nature of the shipping industry and the capital costs associated with vessels that fall under this program.

Environmental Assessment

We have analyzed this proposed rule for purposes of compliance with the National Environmental Policy Act of 1969 (NEPA) (42 U.S.C. 4321 *et seq.*) and we have concluded that, under the categorical exclusions provision in section 4.05 of Maritime Administrative Order (MAO) 600–1, ''Procedures for Considering Environmental Impacts,'' 50 FR 11606 (March 22, 1985), neither the preparation of an Environmental Assessment, an Environmental Impact Statement, nor a Finding of No Significant Impact for this rulemaking is required. This rulemaking will not result, either individually or cumulatively, in a significant impact on the environment. This rulemaking only relates to the determination of whether a coastwise-qualified barge is available for a project, and, if not, allows the use of a non-coastwise qualified barge.

Paperwork Reduction Act

This rulemaking contains an information collection that will require review and clearance by the Office of Management and Budget (OMB).

Unfunded Mandates Reform Act

This rulemaking does not impose unfunded mandates under the Unfunded Mandates Reform Act of 1995. It does not result in costs of $100 million or more to either State, local, or tribal governments, in the aggregate, or to the private sector, and is the least burdensome alternative that achieves this objective of U.S. policy.

Executive Order 13175

MARAD believes that these regulations will have no significant or unique effect on the communities of Indian tribal governments when analyzed under the principles and criteria contained in Executive Order 13175 (Consultation and Coordination with Indian Tribal Governments). Therefore, the funding and consultation requirements of this Executive Order do not apply.

Regulation Identifier Number (RIN)

A regulation identifier number (RIN) is assigned to each regulatory action listed in the Unified Agenda of Federal Regulations. The Regulatory Information Service Center publishes the Unified Agenda in April and October of each year. The RIN contained in the heading of this document can be used to cross-reference this action with the Unified Agenda.

Privacy Act

Anyone is able to search the electronic form of all comments received into any of our dockets by the name of the individual submitting the comment (or signing the comment, if submitted on behalf of an association, business, labor union, etc.). You may review DOT's complete Privacy Act Statement in the **Federal Register** published on April 11, 2000 (Volume 65, Number 70; Pages 19477–78) or you may visit *http://dms.dot.gov.*

List of Subjects in 46 CFR Part 389

Administrative practice and procedure, Maritime carriers, Reporting and recordkeeping requirements.

Accordingly, the Maritime Administration proposes to amend 46 CFR chapter II, subchapter J, by adding Part 389 to read as follows:

PART 389—DETERMINATION OF AVAILABILITY OF COASTWISE-QUALIFIED LAUNCH BARGES

Sec.
389.1 Purpose.
389.2 Definitions.
389.3 Application and fee.
389.4 Review; Issuance of determinations.

Authority: 46 App. U.S.C. 1114(b); 46 App. U.S.C. 883; Pub. L. 108–293, 118 Stat 1028; 49 CFR 1.66.

§ 389.1 Purpose.

This part prescribes regulations implementing the provisions of section 417 of Public Law 108–293, which grants the Secretary, acting through the Maritime Administration, the authority to review and approve applications for determinations of availability of coastwise-qualified launch barges. Owners or operators of non-coastwise qualified launch barges may submit information regarding a specific platform jacket transport and launch project in order for MARAD to determine whether a suitable coastwise-qualified barge is available for the project. If a suitable coastwise-qualified launch barge is not available, a non-coastwise qualified foreign built vessel may be used subject to applicable laws and approval from the Bureau of Customs and Border Protection.

§ 389.2 Definitions.

For the purposes of this part:

(a) *Administrator* means the Maritime Administrator.

(b) *Coastwise-qualified Vessel* means a vessel that has been issued a certificate of documentation with a coastwise endorsement under 46 U.S.C. 12106.

(c) *Coastwise Trade Laws* include:

(1) The Coastwise Endorsement Provision of the Vessel Documentation Laws, (46 U.S.C. 12106);

(2) The Passenger Services Act, section 8 of the Act of June 19, 1886 (46 App. U.S.C. 289);

(3) The Jones Act, section 27 of the Merchant Marine Act, 1920 (46 App. U.S.C. 883); and

(4) Section 2(c) of the Shipping Act of 1916 (46 App. U.S.C. 802).

(d) *Eligible Vessel* means a Launch Barge that:

(1) Is technically capable of transporting and launching an offshore drilling or production platform jacket;

(2) Is available to load the jacket structure, transport the jacket and launch the jacket (in a timely manner or within 7 calendar days of projected loading date); and

(3) Was built before December 31, 2000.

(e) *Launch Barge* means a non-self-propelled barge (or vessel) that is capable of:

(1) Carrying an offshore drilling and/or production platform jacket structure of 12,000 long tons or more; and

(2) Stern launching the offshore drilling or production platform jacket structure in an offshore environment.

(f) A *long ton* equals 2,240 pounds.

(g) *MARAD* means the Maritime Administration, U.S. Department of Transportation.

(h) *Platform Jacket* refers to a single physical component and includes any type of offshore exploration, development, or production structure or component thereof, including platform jackets, tension leg or SPAR platform superstructures (including the deck, drilling rig and support utilities, and supporting structure), hull (including vertical legs and connecting pontoons or vertical cylinder), tower and base sections of a platform jacket, jacket structures, and deck modules (known as ''topsides'').

(i) Secretary means the Secretary of Transportation.

§ 389.3 Application and fee.

(a) *General.* Owners and operators must submit the information described in paragraphs (b) and (c) of this section to the Maritime Administration, Office of Ports and Domestic Shipping, MAR–

830, Room 7201, 400 7th St., SW., Washington, DC 20590. Written applications must be signed by the submitting party and accompanied by a check in the amount of $16,460.00 made payable to the ''Maritime Administration.''

(b) *Required transport and launch project information.* (1) Applications must include a general description of the launch project, including:

(i) A description of the jacket structure with launching weight, center of gravity, major dimensions, and a general arrangement plan,

(ii) The projected loading date and site,

(iii) The projected launching date and site, and

(iv) The launch barges considered, their technical merits and availability studies.

(2) Characteristics of the desired Launch Barge, including, at a minimum, the following information:

(i) Name of the Launch Barge,

(ii) Registered owner of the barge,

(iii) Physical dimensions, deadweight capacity in long tons, ballasting capacities and arrangements, and launch rail capacity and arrangements,

(iv) Hull girder stress study, with supporting documentation, for the proposed launching scenario, and with American Bureau of Shipping (ABS) or United States Coast Guard (USCG) approval,

(v) Hull girder stress study, with supporting documentation, for the proposed transit scenario, and with ABS or USCG approval,

(vi) Vessel intact stability study, with supporting documentation, for the transit condition with a 100-year storm, and with USCG approval, and

(vii) Vessel intact stability study, with supporting documentation, for the launching operation in calm sea condition, and with USCG approval.

(3) Date and place of construction and (if applicable) rebuilding. (If applicant is unable to document the origin of the vessel, foreign construction will be assumed).

(4) Name, address, and telephone number of the vessel owner.

(5) A statement that the applicant represents that the information in this paragraph (b) is true to the best of the applicant's knowledge.

(c) MARAD may require additional information from the applicant as part of the review process.

§ 389.4 Review; Issuance of determinations.

(a) *Initial process; Completeness.* MARAD will review each application for completeness as received. Applications will not be processed until deemed complete by MARAD. We will notify the applicant if additional information is necessary. MARAD encourages the submission of applications well in advance of projects dates in order to allow sufficient time for review under this part. All applications will be available for public inspection electronically in the Department of Transportation Docket at *http://dot.dms.gov.*

(b) *Technical reviews.* (1) MARAD technical personnel will review the technical data stated in § 389.3. The data must be complete and current. The submitted data will not be returned to the applicant and will be retained by MARAD on file for a period of time. The review will not substitute the review and approval by either the ABS or USCG . The review will not verify the accuracy or correctness of the applicant's engineering proposal. The review only pertains to the general reasonableness and soundness of the technical approach.

(2) If a previously reviewed and approved Launch Barge is to be used for carrying a jacket that in all aspects is similar to the last loading and launching operation, the applicant may state so in writing, and submit only the Jacket information for verification and no in-depth vessel stability or hull girder stress studies will be required.

(c) *Administrative review; Public comment.* (1) Notice of applications under review will be published in the **Federal Register**. Interested parties will have thirty (30) days from the date of publication to submit information regarding the availability of eligible coastwise-qualified vessels. Such information should include the technical data outlined in § 389.3(b)(2).

(2) If MARAD does not receive information within the thirty (30) day comment period indicating that a suitable coastwise-qualified vessel is available for the transportation of the platform jacket, or if MARAD receives such information, but determines that the vessel is not suitable or is not reasonably available for the transportation, then MARAD will issue a determination indicating the non-availability of a coastwise-qualified barge.

(3) Determinations will be issued within ninety (90) days from the date the initial notice of application is published in the **Federal Register**.

(4) Upon issuance of a determination, MARAD recommends that applicants contact the Bureau of Customs and Border Protection to ensure that all other requirements of the coastwise laws are satisfied.

(5) Determinations of availability expire one hundred twenty (120) days after the date of issuance, unless extended for good cause, as determined by the Maritime Administrator.

Dated: August 9, 2005.

By order of the Maritime Administrator.

Joel C. Richard,

Secretary.

[FR Doc. 05–16096 Filed 8–12–05; 8:45 am]

BILLING CODE 4910–81–P

DEPARTMENT OF COMMERCE

National Oceanic and Atmospheric Administration

50 CFR Part 300

[Docket No. 060719189–5189–01; I.D. 071405C]

RIN 0648–AT33

International Fisheries; Pacific Tuna Fisheries; Restrictions for 2005 and 2006 Purse Seine and Longline Fisheries in the Eastern Tropical Pacific Ocean

AGENCY: National Marine Fisheries Service (NMFS), National Oceanic and Atmospheric Administration (NOAA), Department of Commerce.

ACTION: Proposed rule; request for comments.

SUMMARY: NMFS proposes this rule to implement the 2005 and 2006 management measures to prevent overfishing of the eastern tropical Pacific Ocean (ETP) tuna stocks, consistent with recommendations by the Inter-American Tropical Tuna Commission (IATTC) that have been approved by the Department of State (DOS) under the Tuna Conventions Act. The purse seine fishery for tuna in the Convention Area would be closed for a 6-week period beginning November 20, 2005, through December 31, 2005, and beginning November 20, 2006, through December 31, 2006. A closure later in the fishing year minimizes the disruption of planned fishery operations, which are not traditionally active during the winter, while meeting the conservation goals for tunas in the ETP. This proposed rule would also close the U.S. longline fishery in the IATTC Convention Area in 2005 and 2006 if the catch reaches the estimated level of 2001. For 2001, the estimated catch of longline caught bigeye tuna was 150 metric tons (mt). This action is taken to limit fishing mortality caused by purse seine fishing and longline fishing in the Convention Area and

contribute to long-term conservation of the tuna stocks at levels that support healthy fisheries.

DATES: Comments must be received by September 14, 2005.

ADDRESSES: Comments on the proposed rule or the initial regulatory flexibility analysis (IRFA) should be sent to Rodney R. McInnis, Regional Administrator, Southwest Region, NMFS, 501 West Ocean Boulevard, Suite 4200, Long Beach, CA 90802 or by email to the Southwest Region at *0648–AT33@noaa.gov*. Comments may also be submitted by email through the Federal e-Rulemaking portal: *http://www.regulations.gov*. Include in the subject line of the e-mail comment the following document identifier: 0648–AT33. Comments also may be submitted by fax to (562) 980–4047. Copies of the initial regulatory impact review/IRFA may be obtained from the Southwest Regional Administrator, Southwest Region, NMFS, 501 W. Ocean Blvd., Long Beach, CA 90902–4213.

FOR FURTHER INFORMATION CONTACT: J. Allison Routt, Sustainable Fisheries Division, Southwest Region, NMFS, (562) 980–4030.

SUPPLEMENTARY INFORMATION:

Electronic Access

This proposed rule is also accessible via the Internet at the Office of the **Federal Register**'s website at *http://www.gpoaccess.gov/fr/index.html*.

The United States is a member of the IATTC, which was established under the Convention for the Establishment of an Inter-American Tropical Tuna Commission signed in 1949 (Convention). The IATTC was established to provide an international arrangement to ensure the effective international conservation and management of highly migratory species of fish in the Convention Area. For the purposes of this closure, the Convention Area is defined to include the waters of the eastern tropical Pacific Ocean bounded by the coast of the Americas, the 40° N. and 40° S. parallels, and the 150° W. meridian. The IATTC has maintained a scientific research and fishery monitoring program for many years and annually assesses the status of stocks of tuna and the fisheries to determine appropriate harvest limits or other measures to prevent overexploitation of the stocks and promote viable fisheries.

Under the Tuna Conventions Act, 16 U.S.C. 951–961 and 971 *et seq.*, NMFS must publish proposed rules to carry out IATTC recommendations that have been approved by DOS. The Southwest Regional Administrator, also is required by rules at 50 CFR 300.29(b)(3) to issue a direct notice to the owners or agents of all U.S. purse seine vessels that operate in the ETP of actions recommended by the IATTC and approved by the DOS.

At an extraordinary meeting in October 2003, the IATTC adopted a resolution addressing yellowfin, bigeye, and skipjack tuna conservation for 2003 and 2004. The 2003 resolution called upon the Parties to the Convention and cooperating non-Parties to prohibit tuna purse seine fishing in a portion of the IATTC Convention Area for the month of December 2003 and for a 6-week period beginning August 1, 2004. NMFS implemented the 2003 closure by separate action in 2003.

At the June 2004 IATTC meeting, the October 2003 resolution was revised and a new resolution was adopted by the Commission. The June 2004 resolution is a multi-annual program on the conservation of tuna in the eastern Pacific Ocean for 2004, 2005, and 2006. This resolution offers a choice for closing the purse seine fishery, either a 6-week closure beginning August 1, of each year, or a 6-week closure beginning November 20, of each year. The resolution of June 2004 incorporated flexibility for nations to administer the purse seine closure in accordance with national legislation and national sovereignty. The selected measures should provide protection against overfishing of the stocks in a manner that is fair, equitable, and readily enforceable.

Comments were received during the 2004 proposed rule comment period with respect to the timing of the closure. Most comments received noted that a closure later in the fishing year gave better public notice, minimized the disruption of planned fishery operations, and was in keeping with the timing of closures for this purse seine fishery and the ability for the industry to prepare for and plan the closure while meeting the conservation goals for tunas in the ETP. In response to these comments, the U.S. chose the period beginning on November 20, 2004 for the 2004 closure of the purse seine fishery.

The June 2004 resolution also calls upon each Party and cooperating non-Party to take measures necessary to ensure that each nation's longline catch of bigeye tuna in the ETP during 2005 and 2006 will not exceed the catch level of 2001. The U.S. catch level of longline caught bigeye tuna for 2001 is estimated to be 150 metric tons in the Convention Area. This limitation is intended to prevent overfishing of the stock, which has declined in recent years while longline fishing effort has greatly expanded. In 2004, the U.S. catch level of longline-caught bigeye in the Convention Area of 150 mt was reached. On December 10, 2004, NMFS closed the U.S. longline fishery for bigeye tuna in the Convention Area for the remainder of 2004.

The IATTC action at the extraordinary meeting in October 2003 and the June 2004 resolution came after considering a variety of measures, including the use of quotas and partial fishery closures as in 1999 through 2002 and the full month purse seine closure used in 2003.

The proposed 2005 and 2006 time/area closure is based on 2004 assessments of the condition of the tuna stocks in the ETP and historic catch and effort data for different portions of the ETP, as well as records relating to implementation of quotas and closures in prior years. The closure is targeted to areas with high catches of bigeye tuna in the purse seine fishery and is believed by the IATTC scientific staff to be sufficient to reduce the risk of overfishing of that stock, especially when considered in combination with the measures implemented in December 2004. The IATTC met in June 2005 and reviewed tuna stock assessments and fishery information and considered that new information in evaluating the need for management measures for 2005 and future years. The IATTC's June 2004 resolution remains in force, and the DOS has approved the resolution, including the management measures described above.

The Regional Administrator, Southwest Region, sent a notice May 31, 2005, to owners and agents of U.S. fishing vessels of the actions adopted by the IATTC and approved by the DOS.

Classification

This action is proposed under the regulations for the Pacific Tuna Fisheries found at 50 CFR 300.25.

On December 8, 1999, NMFS prepared a biological opinion (BO) assessing the impacts of the fisheries as they would operate under the regulations (65 FR 47, January 3, 2000) implementing the International Dolphin Conservation Program Act (IDCPA). For the final rule (69 FR 176, September 13, 2004) to implement the IDCPA, NMFS amended the incidental take statement included in the December 8, 1999 BO. NMFS concluded that the fishing activities conducted under those regulations are not likely to jeopardize the continued existence of any endangered or threatened species under the jurisdiction of NMFS or result in the destruction or adverse modification of critical habitat. This proposed rule will not result in any changes in the fisheries

such that there would be impacts beyond those considered in that BO. The IATTC has also taken action to reduce sea turtle injury and mortality from interactions in the purse seine fishery so impacts of the fisheries should be lower than in the past. Because this closure does not alter the scope of the fishery management regime analyzed in the IDCPA rule, or the scope of the impacts considered in that consultation, NMFS is relying on that analysis to conclude that this rule will not likely adversely effect any endangered or threatened species under the jurisdiction of NMFS or result in the destruction or adverse modification of critical habitat. Therefore, NMFS has determined that additional consultation is not required for this action.

The U.S. ETP tuna purse seine fisheries occasionally interact with a variety of species of dolphin, and dolphin takes are authorized and managed under the IDCPA. These conservation management measures in this proposed rule do not affect the administration of that program, which is consistent with section 303(a)(2) of the Marine Mammal Protection Act.

NMFS prepared an EA for the final rule (70 FR 69, April 12, 2005), to implement resolutions adopted by the IATTC and by the Parties to the Agreement on the International Dolphin Conservation Program. The Assistant Administrator for Fisheries concluded that there would be no significant impact on the human environment as a result of that final rule. The impacts of the fisheries as they will operate under the 6-week closures in 2005 and 2006 are within the range of impacts of the alternatives considered in that EA, and are not expected to pose different impacts to the human environment. Therefore, this action does not require further analysis under NEPA.

This proposed rule has been determined to be not significant for the purposes of Executive Order 12866.

An IRFA was prepared that describes the economic impact that this proposed rule, if adopted, would have on small entities. A copy of the IRFA for this proposed rule is available for public comment (see **ADDRESSES**). A summary of the analysis follows.

This action would prohibit the use of purse seine gear to harvest tuna in the Convention Area for a 6- week period beginning November 20, 2005, through December 31, 2005, and beginning November 20, 2006, through December 31, 2006, and limit the annual 2005 and 2006 U.S. catch of bigeye tuna caught by longline in the ETP to the level reached in 2001 (150 metric tons).

The proposed purse seine closure would apply to the U.S. tuna purse seine fleet, which consists of 10- 20 small vessels (carrying capacity below 400 short tons (363 metric tons)) and 4–6 large vessels (carrying capacity 400 short tons (363 metric tons) or greater). The large vessels usually fish outside U.S. waters and deliver their catch to foreign ports or transship to processors outside the mainland United States. The large vessels are categorized as large business entities (revenues in excess of $3.5 million per year). A large purse seine vessel typically generates 4,000 to 5,000 metric tons of tuna valued at between $4 and $5 million per year. The closure should not significantly affect their operations as they are capable of fishing in other areas that would remain open. The small vessels are categorized as small business entities (revenues below $3.5 million per year). They fish out of California in the U.S. exclusive economic zone (EEZ) most of the year for small pelagic fish (Pacific sardine, Pacific mackerel) and for market squid in summer. Some small vessels harvest tuna seasonally when they are available. The proposed time/area closure will have no effect on small vessels because they do not have the endurance and markets to fish that far south.

For 2004, the U.S. chose to close the purse seine fishery beginning November 20, 2004, for the remainder of 2004. In 2004 the U.S. catch level of longline caught bigeye tuna in the Convention Area of 150 metric tons was reached. On December 10, 2004, NMFS closed the U.S. longline fishery for bigeye tuna in the Convention Area for the remainder of 2004.

The portion of the U.S. longline fleet (approximately 18 vessels) operating out of California has historically caught bigeye tuna in the swordfish fishery (now closed), so they should not be affected by the longline fishery limit. Further, the prohibition of swordfish targeted by this fleet has encouraged many of the vessel owners to relocate their activity to Hawaii; therefore, the likelihood that they will fish in the ETP for bigeye tuna is reduced. The portion of the fleet operating out of Hawaii has generally operated outside the boundaries of the IATTC Convention Area, and has not made significant catches in those waters. In 2004, the Hawaii based longline fishery harvested the 150 metric ton limit of bigeye tuna in the Convention Area. With the reopening of the swordfish fishery for that fleet, effort directed at bigeye tuna (which has mainly occurred west of the Convention Area) should decrease. A closure should not significantly affect their operations as they are capable of fishing in other areas that would remain open, outside the boundaries of the IATTC Convention Area.

NMFS is not aware of any relevant Federal rules that duplicate, overlap, or conflict with this proposed rule. This rule does not impose reporting or recordkeeping requirements, and the compliance requirements for the closure areas are as described at the outset of this summary.

NMFS considered three alternatives for this proposed rule:

The 2004 IATTC Tuna Conservation Resolution allows nations to opt for a six-week summer closure of the purse seine fishery from August 1 through September 20 of each of the years 2004, 2005, and 2006, rather than the closure from November 21 through December 31. Based on public comments on the proposed rule in 2004, NMFS chose to pursue six-week closures that begin in November 2005 and November 2006. The August 1 September 20 closure alternative would have had a greater economic impact on small entities than the November 20 December 31 closure. In particular, the U.S. purse seine fleet prefers a closure later in the fishing year because the winter weather is not conducive to fishing. Also, throughout the history of this fishery shipyards have been prepared to accept vessels for scheduled repairs during the winter months. The fishery closure later in the year allows the industry to plan for and mitigate economic impacts of a closure while still providing the conservation benefits to the tuna resources in the ETP.

NMFS also considered the alternative of not implementing the 2004 IATTC Tuna Conservation Resolution. This alternative would have imposed no economic costs on small entities. However, failure to implement measures that have been agreed on pursuant to this Convention would violate the United States' obligations under the Convention, and would violate the Tuna Conventions Act.

Authority: 16 U.S.C. 951-961 and 971 *et seq.*

Dated: August 9, 2005.

James W. Balsinger,

Acting Deputy Assistant, Administrator for Regulatory Programs, National Marine Fisheries Service.

[FR Doc. 05–16115 Filed 8–10–05; 1:28 pm]

BILLING CODE 3510–22–S

DEPARTMENT OF COMMERCE

National Oceanic and Atmospheric Administration

50 CFR Part 600

[Docket No. 030128024–5027–02; I.D. 121002A]

RIN 0648–AQ63

Magnuson-Stevens Act Provisions; National Standard Guidelines

AGENCY: National Marine Fisheries Service (NMFS), National Oceanic and Atmospheric Administration (NOAA), Commerce.

ACTION: Proposed rule; extension of comment period.

SUMMARY: NMFS extends the public comment period on the proposed rule containing revisions to the National Standard 1 (NS1) guidelines. NMFS has received various requests to extend the comment period for the proposed rule beyond its current 60-day comment period. The extension of the comment period for another 60 days is intended to ensure that NMFS provides adequate time for various stakeholders and members of the public to comment on the proposed revisions to the NS1 guidelines. The comment period is extended from August 22, 2005, to October 21, 2005.

DATES: Comments must be received on or before October 21, 2005.

ADDRESSES: You may submit comments by any of the following methods:

• E-mail: *nationalstandard1@noaa.gov*. ''Comments on proposed rule for National Standard 1.''

• Mail: Mark R. Millikin, National Marine Fisheries Service, NOAA, Office of Sustainable Fisheries, 1315 East-West Highway, Room 13357, Silver Spring, MD 20910 (Mark the outside of the envelope ''Comments on National Standard 1 proposed rule'').

• Federal e-Rulemaking Portal: *http://www.regulations.gov*. Include in the subject line the following:

Copies of the Environmental Assessment/Regulatory Impact Review (EA/RIR) for this proposed rule are available from Mark R. Millikin at the address listed above. The EA/RIR document is also available on the internet at: *http://www.nmfs.noaa.gov/sfa/domes_fish/index.htm*.

FOR FURTHER INFORMATION CONTACT: Mark R. Millikin, Senior Fishery Management Specialist, 301–713–2341, e-mail *mark.millikin@noaa.gov*.

SUPPLEMENTARY INFORMATION: A proposed rule that covers NMFS' proposed revisions to the NS1 guidelines was published on June 22, 2005 (70 FR 36240), with a comment period ending date of August 22, 2005. After receiving several requests to extend the comment period, NMFS has decided to extend it for another 60 days through October 21, 2005.

This action extends the comment period for a proposed rule that the Office of Management and Budget determined to be significant under Executive Order 12866.

Authority: 16 U.S.C. 1801 *et seq.*

Dated: August 5, 2005.

James W. Balsiger,

Acting Deputy Assistant Administrator for Regulatory Programs, National Marine Fisheries Service.

[FR Doc. 05–16119 Filed 8–12–05; 8:45 am]

BILLING CODE 3510–22–S

DEPARTMENT OF COMMERCE

National Oceanic and Atmospheric Administration

50 CFR Part 660

[Docket No. 050801214–5214–01; I.D. 072105B]

RIN 0648–AQ91

Fisheries Off West Coast States and in the Western Pacific; Western Pacific Pelagic Fisheries; Sea Turtle Mitigation Measures

AGENCY: National Marine Fisheries Service (NMFS), National Oceanic and Atmospheric Administration (NOAA), Commerce.

ACTION: Proposed rule; request for comments.

SUMMARY: This proposed rule would set requirements for attending protected species workshops, for handling, resuscitating, and releasing sea turtles that are hooked or entangled in fishing gear, and for fishing gear configuration. The proposed rule is intended to reduce and mitigate interactions between sea turtles and vessels managed under the Fishery Management Plan for the Pelagic Fisheries of the Western Pacific Region (Pelagics FMP). This action is being taken to comply with the terms and conditions of a 2004 Biological Opinion resulting from a section 7 consultation under the Endangered Species Act (ESA) on interactions between sea turtles and fisheries managed under the Pelagic FMP.

DATES: Comments on the proposed rule must be received by September 14, 2005.

ADDRESSES: You may submit comments on this proposed rule or its Initial Regulatory Flexibility Analysis (IRFA), identified by 0648–AQ91 by any of the following methods:

• E-mail: *AQ91–Turtles@noaa.gov*. Include in the subject line of the e-mail comment the following document identifier: Turtle Measures. Comments sent via e-mail, including all attachments, must not exceed a 10 megabyte file size.

• Federal e-Rulemaking portal: *www.regulations.gov*. Follow the instructions for submitting comments.

• Mail: William L. Robinson, Administrator, NMFS, Pacific Islands Region (PIR), 1601 Kapiolani Boulevard, Suite 1110, Honolulu, HI 96814–4700.

• Fax: 808–973–2941.

Copies of the regulatory amendment document, which includes an Environmental Assessment (EA) and an IRFA, may be obtained from Kitty M. Simonds, Executive Director, Western Pacific Fishery Management Council (WPFMC), 1164 Bishop Street, Suite 1400, Honolulu, HI 96813, or on the internet at *www.wpcouncil.org*.

FOR FURTHER INFORMATION CONTACT: Robert Harman, NMFS PIR, 808–944–2271.

SUPPLEMENTARY INFORMATION: NMFS conducted a section 7 consultation under the Endangered Species Act (ESA) on interactions between sea turtles and fisheries managed under the Pelagic FMP. The result of this consultation was a Biological Opinion that was issued on February 23, 2004 (2004 Opinion). The 2004 Opinion concluded that the fisheries managed under the Pelagics FMP were not likely to jeopardize the continued existence of sea turtles or other species listed as threatened or endangered under the ESA. Included in the actions considered under the 2004 Opinion were several measures required by a previous (15 November 2002) Biological Opinion (2002 Opinion) on the Pelagics FMP fisheries. These measures were vacated on 1 April 2004, by a Federal Court order. The requirements for general longline permits were additional to those pre-existing requirements for Hawaii-based longline limited access permit holders. Terms and conditions of the 2004 Opinion required: (a) owners and operators of vessels registered for use under longline general permits to attend protected species workshops annually; (b) owners and operators of vessels registered for use under longline general permits to carry and use dip nets, line clippers, and bolt cutters, and follow sea turtle handling, resuscitation, and release requirements for

incidentally hooked or entangled sea turtles; and (c) operators of non-longline vessels using hooks to target pelagic management unit species to follow sea turtle handling, resuscitation, and release requirements, as well as to remove the maximum amount of the gear possible from incidentally hooked or entangled sea turtles.

At its 122nd meeting (March 22–25, 2004), the (Western Pacific Fishery Management Council (WPFMC) took initial action on the three measures listed above by indicating its preliminarily preferred alternatives and recommending the development and analysis of a full range of alternatives for final action. The WPFMC also requested alternatives to be developed and analyzed for a fourth measure that would require operators of vessels registered for use under longline general permits (including those that will be registered for use under American Samoa limited access longline permits) to use 18/0 or larger circle hooks with a 10 offset, mackerel-type bait, and dehookers, when shallow-setting north of the Equator. These requirements had previously been implemented in the Hawaii-based limited access longline fishery in April 2004.

The WPFMC recommended the inclusion of this fourth measure for two reasons: (a) to extend the conservation benefits derived from the use of circle hooks, mackerel-type bait, and dehookers, to all longline vessels managed under the Pelagics FMP that may shallow-set north of the Equator, and (b) to remove incentives for owners of Hawaii-based longline vessels to shed their permits in favor of general permits, to avoid using circle hooks, mackerel bait, etc., when shallow-setting north of the Equator. The combination of large (size 18/0) circle hooks and mackerel bait were shown to reduce catches of loggerhead sea turtles by 92 percent and leatherback turtles by 67 percent, and improve swordfish catches 30 percent, when used on Atlantic longline vessels making shallow sets to target swordfish. Circle hooks have also been found to hook turtles predominantly in the mouth rather than the delicate tissues of the esophagus, thus minimizing trauma and increasing survival rates for those turtles that are unavoidably hooked.

Logbook data indicate that longline fishing under longline general permits has been concentrated south of the Equator in U.S. exclusive economic zone (EEZ) waters around American Samoa, where most vessels target deep-swimming albacore tuna to sell to canneries in Pago Pago, American Samoa. There are no domestic longline fisheries in Guam and the Commonwealth of the Northern Mariana Islands, although there is local interest in developing such fisheries. To date, no longline general permit holders have elected to target swordfish (or other species) north of the Equator using shallow sets. The main reason for this is that the principal market for swordfish in the western Pacific is Hawaii, and to land longline caught fish directly into Honolulu or other ports in the State requires a Hawaii longline limited access permit.

Vessels with longline general permits, however, could potentially land in other ports within and beyond the western Pacific region. In the past, for example, some longline vessels from the western Pacific landed swordfish in California ports, but this opportunity is now closed to vessels that are not permitted under the Pacific Fishery Management Council's West Coast Highly Migratory Species Fishery Management Plan. No western Pacific longline vessels have opted to land fish at ports outside the U.S.A. in Central or South America, as the economics of doing so weigh against this. Nonetheless, the WPFMC believed it was prudent to anticipate the possibility of shallow-setting north of the Equator by vessels that are registered for use under longline general permits, no matter how unlikely this seems at present. Thus, the WPFMC recommended that owners and operators of such vessels should be required to employ the same sea turtle mitigation measures as their Hawaii-based counterparts.

At its 123rd meeting (June 21–24, 2005), the WPFMC took final action and recommended that NMFS approve and implement regulations to require owners and operators of vessels registered for use under longline general permits to: (a) attend annual protected species workshops; (b) carry and use dip nets, line clippers, and bolt cutters, and follow sea turtle handling, resuscitation, and release requirements for incidentally-hooked or entangled sea turtles (vessels with a freeboard of 3 ft (0.91 m) or less are exempted from carrying dipnets or long-handled line clippers); and (c) use 18/0 or larger circle hooks with a 10 offset, mackerel-type bait, and dehookers, when shallow-setting north of the Equator (vessels with a freeboard of 3 ft (0.91 m) or less are exempted from carrying long-handled dehookers). The WPFMC also recommended that owners and operators of other (non-longline) vessels, managed under the Pelagics FMP and using hooks to target PMUS, remove trailing gear from incidentally hooked and entangled sea turtles, and follow sea turtle handling, resuscitation, and release requirements.

Classification

At this time, NMFS has not determined that this proposed rule is consistent with the national standards of the Magnuson-Stevens Fishery Conservation and Management Act and other applicable laws. NMFS, in making that determination, will take into account the data, views, and comments received during the comment period.

This proposed rule has been determined to be not significant for purposes of Executive Order 12866.

The WPFMC prepared an IRFA that describes the economic impact this proposed rule, if adopted, would have on small entities. A copy of the IRFA is available from Kitty M. Simonds, WPFMC (see **ADDRESSES**). A description of the action, why it is being considered, its objectives, and the legal basis for this action are contained at the beginning of this section in the preamble and in the **SUMMARY** section of the preamble. A summary of the analysis follows.

Most fishing vessels operating in the western Pacific region under the Pelagics FMP are owner-operated, with few individuals holding permits for more than one vessel. There are estimated to be between 9,416 and 15,816 of these fishing operations (these estimated totals may include vessels that do not operate in EEZ waters), all of which are believed to be small businesses, i.e., they have gross revenues of less than $3.5 million annually.

Previously, all operators of longline vessels managed under the Pelagics FMP were required to attend protected species workshops. This requirement was removed when several regulations were vacated by a U.S. District Court on April 1, 2004 (D.D.C., Civ. No. 01–0765). Requiring both the owners and operators of vessels registered for use under longline general permits to annually attend protected species workshops will have a minimal cost for those who reside in Hawaii or American Samoa, where the training workshops are conducted. Some 15 percent of the vessels that fish in American Samoa and Hawaii under longline permits, however, have owners that reside outside of those two areas. A substantial travel cost to attend the workshops would be incurred by those people. NMFS is currently accommodating the owners and operators of Hawaii-based vessels that live outside Hawaii by providing interim protected species training via computer disk, mailed to the owner or operator. This type of remote training and certification

relieves potential travel costs, and may be further developed and implemented for other owners and operators who are not able to attend the workshops in person.

Owners and operators of the vessels that are registered for use under longline general permits were previously required to carry and use dipnets, long-handled line clippers, and bolt cutters, so most vessels with longline general permits already have this gear. However, these measures were also removed when several regulations were vacated in the same April 1, 2004, case cited above. If these vessels need to re-equip themselves, the costs are not expected to exceed $100 per vessel. The WPFMC recommended that small longline vessels such as alias (American Samoa-based catamaran longline vessels generally less than 40 ft (12.2 m) in length) not be required to carry a dip net or long-handled line clippers because, due to the low freeboard on these boats, operators can simply retrieve and release the turtle from the side of the vessel without risk of additional injury to the animal.

The WPFMC's recommendation to require vessels registered under a longline general permit to use 18/0 or larger circle hooks with a 10 offset, mackerel-type bait, and dehookers when shallow-setting north of the Equator would incur the following costs: Re-equipping longlines with 18/0 circle hooks plus swivels would cost approximately $1.50/hook, and a large (≤ 75 ft) longline vessel generally deploys 2,000–2,500 hooks/set, so the cost per vessel of that size would be $3,000 to $3,750. American Samoa-based longline vessels already use mackerel-type bait (sardine or saury (sanma)), so there would be no additional cost for the bait requirement for these vessels. Obtaining approved dehookers and associated equipment would cost about $500 per vessel. The WPFMC recommended that small longline vessels with a freeboard of less than or equal to three feet not be required to carry long-handled dehookers because operators can more effectively and safely use short-handled dehookers to release sea turtles without risk of additional injury to the animal.

Under this proposed rule, the total cost to equip a vessel registered for use with a longline general permit to shallow-set north of the Equator is estimated to be between $3,500 and $4,250. An ongoing additional annual replacement cost of $0.20 per hook would also be required as circle hooks are slightly more expensive than typical ''J'' hooks.

The WPFMC recommendation to require operators of all vessels that use hooks to target PMUS to follow sea turtle handling, resuscitation, and release requirements, including removing trailing gear, is not expected to exact any economic burden on these fishery participants because there no gear requirements are being proposed for non-longline vessels, and interactions are rare.

For each of the four measures recommended by the WPFMC, three alternatives were developed, so altogether, 12 alternatives were considered. The alternatives considered for the measure regarding protected species workshop attendance by owners and of operators vessels registered for use under longline general permits were: (a) no action maintaining the status quo; (b) requiring annual attendance by only vessel operators; and (c) requiring annual attendance by both vessel owners and operators.

The alternatives considered for the measure regarding sea turtle mitigation gear (i.e., dip nets, line clippers, bolt cutters) and handling, resuscitation, and release requirements were: (a) no action maintaining the status quo; (b) requiring owners and operators of vessels registered under a longline general permit to carry and use dip nets, line clippers, and bolt cutters, as well as follow handling, resuscitation, and release requirements for hooked or entangled sea turtles (vessels with 3 ft (0.91 m) of freeboard or less would be exempt from carrying dip nets or long-handled line clippers;) and (c) requiring owners and operators of vessels registered under a longline general permit to carry and use dip nets, line clippers, and bolt cutters, as well as follow handling, resuscitation, and release requirements for hooked or entangled sea turtles with no exemptions for longline vessels with freeboard less than three ft (0.91 m).

The alternatives for the measure regarding vessels that use hooks to target pelagic management unit species were: (a) no action maintaining the status quo; (b) requiring vessel owners and operators to follow sea turtle handling, resuscitation, and release requirements, including the removal of trailing gear from a hooked or entangled sea turtle when fishing in the EEZ of the western Pacific region; and (c) requiring vessel owners and operators to follow sea turtle handling, resuscitation, and release requirements, including the removal of trailing gear, wherever they fish.

The alternatives for the measure regarding gear and bait requirements for owners and operators of vessels registered for use under a longline general permit that may shallow-set north of the Equator were: (a) no action maintaining the status quo; (b) requiring owners and operators to use 18/0 or larger circle hooks with 10 offset, mackerel-type bait, and dehookers when shallow-setting north of the Equator; and (c) prohibiting shallow-setting north of the Equator by vessels registered under longline general permits.

The following alternative was preferred in the IRFA because it best complied with the terms and conditions of the 2004 Biological Opinion: (a) requiring annual workshop attendance by both owners and operators; (b) requiring owners and operators of vessels registered for use under a longline general permit to carry and use dip nets, line clippers, and bolt cutters, as well as to follow handling, resuscitation, and release requirements for hooked or entangled sea turtles (vessels with 3 ft (0.91 m) of freeboard or less would be exempted from carrying dip nets or long-handled line clippers); (c) requiring longline vessel owners and operators to follow sea turtle handling, resuscitation, and release requirements, including the removal of trailing gear wherever they fish; and (d) requiring longline vessels owners and operators to use 18/0 or larger circle hooks with 10 offset, mackerel-type bait, and dehookers when shallow-setting north of the Equator (vessels with 3 ft (0.91 m) of freeboard or less would not be required to carry long handled dehookers).

The inclusion of existing text on turtle handling requirements from 50 CFR 660.32 (c) and (d), which is largely duplicative of text in 50 CFR 223.206, is necessary because 50 CFR 223.206 only applies to threatened species of sea turtles. This proposed rule would extend those handling requirements to interactions between Pelagics FMP fishing vessels and all species of sea turtles. To the extent practicable, it has been determined that there are no other Federal rules that may duplicate, overlap or conflict with this proposed rule.

List of Subjects in 50 CFR Part 660

Administrative practice and procedure, American Samoa, Fisheries, Fishing, Guam, Hawaiian Natives, Indians, Northern Mariana Islands, Reporting and recordkeeping requirements.

James W. Balsiger,

Acting Deputy Assistant Administrator for Regulatory Programs, National Marine Fisheries Service.

For the reasons set out in the preamble, 50 CFR part 660 is proposed to be amended as follows:

PART 660—FISHERIES OFF WEST COAST STATES AND IN THE WESTERN PACIFIC

1. The authority citation for part 660 continues to read as follows:

Authority: 16 U.S.C. 1801 *et seq.*

2. In § 660.22, paragraphs (ff), (gg), (ii), (ll), (nn), and (oo) are revised to read as follows:

§ 660.22 Prohibitions.

* * * * *

(ff) Own or operate a vessel registered for use under any longline permit issued under § 660.21 while engaged in longline fishing for Pelagic Management Unit Species and fail to be certified for completion of a NMFS protected species workshop, in violation of § 660.34(a).

(gg) Own or operate a vessel registered for use under any longline permit issued under § 660.21 while engaged in longline fishing for Pelagic Management Unit Species without having on board a valid protected species workshop certificate issued by NMFS or a legible copy thereof, in violation of § 660.34(d).

* * * * *

(ii) Fail to carry, or fail to use, a line clipper, dip net, or dehooker on a vessel registered for use under any longline permit issued under § 660.21, in violation of § 660.32.

* * * * *

(ll) When operating a vessel registered for use under any longline permit issued under § 660.21 or operating a vessel using hooks to target Pelagic Management Unit Species while fishing under the Pelagics FMP, fail to comply with the sea turtle handling requirements, in violation of § 660.32(b).

(nn) Engage in shallow-setting from a vessel registered for use under any longline permit issued under § 660.21 north of the Equator (0° lat.) with hooks other than offset circle hooks sized 18/0 or larger, with a 10 offset, in violation of § 660.33(f).

(oo) Engage in shallow-setting from a vessel registered for use under any longline permit issued under § 660.21 north of the Equator (0° lat.) with bait other than mackerel-type bait, in violation of § 660.33(g).

* * * * *

3. In § 660.32, paragraphs (a)(2) through (a)(4) are redesignated as paragraphs (a)(4) through (a)(6); introductory text is added to paragraph (a); paragraphs (a)(1) and (b) are revised; new paragraphs (a)(2) and (a)(3) are added; and paragraphs (c) and (d) are removed to read as follows:

§ 660.32 Sea turtle mitigation measures.

(a) *Possession and use of required mitigation gear.* The gear required in paragraph (a) of this section must be used according to the sea turtle handling requirements set forth in paragraph (b) of this section.

(1) *Hawaii longline limited access permits.* Any owner or operator of a vessel registered for use under a Hawaii longline limited access permit must carry aboard the vessel line clippers meeting the minimum design standards specified in paragraph (a)(5) of this section, dip nets meeting the minimum design standards specified in paragraph (a)(6) of this section, and dehookers meeting the minimum design and performance standards specified in paragraph (a)(4) of this section.

(2) *Other longline vessels with a freeboard of more than 3 ft (0.91m).* Any owner or operator of a longline vessel with a permit issued under § 660.21 other than a Hawaii limited access longline permit and that has a freeboard of more than 3 ft (0.91 m) must carry aboard the vessel line clippers meeting the minimum design standards specified in paragraph (a)(5) of this section, dip nets meeting the minimum design standards specified in paragraph (a)(6) of this section, and dehookers meeting ths minimum design and performance standards specified in paragraph (a)(7) of this section.

(3) *Other longline vessels with a freeboard of 3 ft (0.91 m) or less.* Any owner or operator of a longline vessel with a permit issued under § 660.21 other than a Hawaii limited access longline permit and that has a freeboard of more than 3 ft (0.91 m) must carry aboard their vessels line clippers capable of cutting the vessels fishing line or leader within approximately 1 ft (0.3 m) of the eye of an embedded hook, as well as wire or bolt cutters capable of cutting through the vessel's hooks.

(4) *Handline, troll, pole-and-line, and other vessels using hooks other than longline vessels.* Any owner or operator of a vessel fishing under the Pelagics FMP with hooks other than longline gear are not required to carry specific mitigation gear, but must comply with the handling requirements set forth in paragraph (b) of this section.

* * * * *

(b) *Handling requirements.* If a sea turtle is observed to be hooked or entangled in fishing gear from any vessel fishing under the Pelagics FMP, vessel owners and operators must use the required mitigation gear set forth in subsection (a) to comply with these handling requirements. Any hooked or entangled sea turtle must be handled in a manner to minimize injury and promote survival.

(1) *Sea turtles that cannot be brought aboard.* In instances where a sea turtle is too large to be brought aboard or the sea turtle cannot be brought aboard without causing further injury to the sea turtle, the vessel owner or operator must disentangle and remove the gear, or cut the line as close as possible to the hook or entanglement, to remove the maximum amount of the gear from the sea turtle.

(2) *Sea turtles that can be brought aboard.* In instances where a sea turtle is not too large to be brought aboard, or the sea turtle can be brought aboard without causing further injury to the turtle, the vessel owner or operator must take the following actions:

(i) Immediately bring the sea turtle aboard;

(ii) Handle the sea turtle in accordance with the procedures in paragraphs (b)(3) and (b)(4) of this section; and

(iii) Disentangle and remove the gear, or cut the line as close as possible to the hook or entanglement, to remove the maximum amount of the gear from the sea turtle.

(3) *Sea turtle resuscitation.* If a sea turtle appears dead or comatose, the following actions must be taken:

(i) Place the sea turtle on its belly (on the bottom shell or plastron) so that the sea turtle is right side up and its hindquarters elevated at least 6 inches (15.24 cm) for a period of no less than 4 hours and no more than 24 hours. The amount of the elevation varies with the size of the sea turtle; greater elevations are needed for larger sea turtles;

(ii) Administer a reflex test at least once every 3 hours. The test is to be performed by gently touching the eye and pinching the tail of a sea turtle to determine if the sea turtle is responsive;

(iii) Keep the sea turtle shaded and damp or moist (but under no circumstances place the sea turtle into a container holding water). A water-soaked towel placed over the eyes, carapace and flippers is the most effective method of keeping a sea turtle moist; and

(iv) Return to the sea any sea turtle that revives and becomes active in the manner described in paragraph (b)(4) of this section. Sea turtles that fail to revive within the 24–hour period must also be returned to the sea in the manner described in paragraph (b)(4) of this section.

(4) *Sea turtle release.* After handling a sea turtle in accordance with the requirements of paragraphs (b)(2) and (b)(3) of this section, the sea turtle must be returned to the ocean after identification unless NMFS requests the retention of a dead sea turtle for research. In releasing a sea turtle the vessel owner or operator must:

(i) Place the vessel engine in neutral gear so that the propeller is disengaged and the vessel is stopped, and release the sea turtle away from deployed gear; and

(ii) Observe that the turtle is safely away from the vessel before engaging the propeller and continuing operations.

(5) *Other sea turtle requirements.* No sea turtle, including a dead turtle, may be consumed or sold. A sea turtle may be landed, offloaded, transhipped or kept below deck only if NMFS requests the retention of a dead sea turtle for research.

4. In § 660.33, paragraphs (f) and (g) are revised to read as follows:

§ 660.33 Western Pacific longline fishing restrictions.

* * * * *

(f) Any owner or operator of a vessel registered for use under any longline permit issued under § 660.21 must use only offset circle hooks sized 18/0 or larger, with a 10° offset, when shallow-setting north of the Equator (0° lat.). As used in this paragraph, an offset circle hook sized 18/0 or larger is one with an outer diameter at its widest point is no smaller than 1.97 inches (50 mm) when measured with the eye of the hook on the vertical axis (y-axis) and perpendicular to the horizontal axis (x-axis). As used in this paragraph, a 10° offset is measured from the barbed end of the hook and is relative to the parallel plane of the eyed-end, or shank, of the hook when laid on its side.

(g) Any owner or operator of a vessel registered for use under any longline permit issued under § 660.21 must use only mackerel-type bait when shallow-setting north of the Equator (0° lat.). As used in this paragraph, mackerel-type bait means a whole fusiform fish with a predominantly blue, green or gray back and predominantly gray, silver or white lower sides and belly.

* * * * *

5. In § 660.34, paragraphs (a), (c) and (d) are revised to read as follows:

§ 660.34 Protected species workshops.

(a) Each year, both the owner and the operator of a vessel registered for use under any longline permit issued under § 660.21 must attend and be certified for completion of a workshop conducted by NMFS on interaction mitigation techniques for sea turtles, seabirds and other protected species.

* * * * *

(c) An owner of a vessel registered for use under any longline permit issued under § 660.21 must have a valid protected species workshop certificate issued by NMFS to the owner of the vessel, in order to maintain or renew their vessel registration.

(d) An owner and an operator of a vessel registered for use under any longline permit issued under § 660.21 must have on board the vessel a valid protected species workshop certificate issued by NMFS to the operator of the vessel, or a legible copy thereof.

* * * * *

[FR Doc. 05–16117 Filed 8–12–05; 8:45 am]

BILLING CODE 3510–22–S

DEPARTMENT OF COMMERCE

National Oceanic and Atmospheric Administration

50 CFR Part 660

[Docket No. 050801212–5212–01; I.D. 072805A]

RIN 0648–AT52

Fisheries off West Coast States and in the Western Pacific; Western Pacific Pelagic Fisheries; Control Date for Non-Longline Commercial Pelagic Fisheries in EEZ around Hawaii

AGENCY: National Marine Fisheries Service (NMFS), National Oceanic and Atmospheric Administration (NOAA), Commerce.

ACTION: Proposed rule; advance notice of proposed rulemaking; notification of control date.

SUMMARY: NMFS announces that persons who enter the non-longline commercial pelagic fisheries (e.g., troll, handline, pole and line, etc.) in the U.S. exclusive economic zone (EEZ) around the Hawaiian Islands after June 2, 2005 (''control date'') are not guaranteed future participation in the fishery if the Western Pacific Fishery Management Council (WPFMC) recommends, and NMFS approves, a program limiting entry or effort. This action does not commit the WPFMC or NMFS to limit entry, or prevent any other date from being selected for eligibility to participate in the non-longline commercial pelagic fisheries. The WPFMC or NMFS may also use other criteria to limit fishing effort or participation in a limited entry program that is developed in the future.

DATES: Comments must be submitted in writing by October 14, 2005.

ADDRESSES: You may submit comments on this document identified by I.D. 072805A by any of the following methods:

- E-mail: *AT52–HawaiiDate@noaa.gov*. Include I.D. 072805A in the subject line of the e-mail comment following document identifier: Hawaii non-longline control date. Comments sent via e-mail, including all attachments, must not exceed a 10 megabyte file size.
- Federal e-Rulemaking portal: *www.regulations.gov*. Follow the instructions for submitting comments.
- Mail: William L. Robinson, Administrator, NMFS Pacific Islands Region (PIR), 1601 Kapiolani Blvd., Suite 1110, Honolulu, HI 96814.
- Fax: 808–973–2941

FOR FURTHER INFORMATION CONTACT: Robert Harman, NMFS PIR, at 808–944–2271.

SUPPLEMENTARY INFORMATION: On June 2, 2005, at its 127th meeting, the WPFMC recommended a ''control date'' of June 2, 2005, applicable to persons who are contemplating entering the non-longline commercial fisheries for pelagic species (i.e., troll, handline, pole and line, other) in the U.S. exclusive economic zone (EEZ) around Hawaii. The WPFMC requested that this control date be published in the **Federal Register** to notify fishermen that if they enter these fisheries after June 2, 2005, they may not be assured of future access if the WPFMC and/or NMFS decide to limit entry or impose other measures to manage these fisheries.

Establishment of a control date responds to NMFS' notice to the WPFMC, dated December 30, 2004 (69 FR 78397), that overfishing is occurring Pacific-wide on bigeye tuna, and that management action must be taken by the WPFMC to end this overfishing. The WPFMC tentatively has determined that a limited access program in the U.S. EEZ around Hawaii might be one of the viable mechanisms to reduce fishing mortality in Pacific bigeye tuna, as a step toward ending overfishing in the pelagic fisheries.

The State of Hawaii maintains a registry of commercial pelagic fishermen, as required by state regulations. In 2003, some 2,037 people were registered as commercial pelagic fishermen. Of these, 1,681 (83 percent) were non-longline fishermen. Most of these non-longline pelagic fishermen were active in the EEZ and, thus, represent an estimate of fishermen who could be affected by this control date. Based on the state's 2003 commercial fishing data reported by fishermen, the total catch of pelagic species in Hawaii was 22.6 million lb (10,251 mt), of which 5.2 million lb (2,359 mt)(23 percent) was made by non-longline small-boat pelagic methods. The entire pelagic fishery landed fish with an ex-vessel value of $47.9 million, of which

about $9.3 million (19.4 percent) were from non-longline methods.

Control dates are intended to discourage speculative entry into fisheries, as new entrants entering the fishery after the control date are forewarned that they are not guaranteed future participation in the fishery.

Establishment of this control date does not commit the WPFMC or NMFS to any particular management regime or criteria for entry into the non-longline commercial pelagic fisheries. Fishermen are not guaranteed future participation in this fishery, regardless of their level of participation before or after the control date. The WPFMC may recommend a different control date or it may choose a management regime that does not involve a control date. Other criteria, such as documentation of commercial landings and sales, may be used to determine eligibility for participation in a limited access fishery. The WPFMC and/or NMFS also may choose to take no further action to control entry or access to the fishery, in which case the control date may be rescinded.

Classification

This advance notice of proposed rulemaking has been determined to be not significant for the purposes of Executive Order 12866.

Authority: 16 U.S.C. 1801 *et seq.*

Dated: August 10, 2005.

James W. Balsiger,

Acting Deputy Assistant Administrator for Regulatory Programs, National Marine Fisheries Service.

[FR Doc. 05–16121 Filed 8–12–05; 8:45 am]

BILLING CODE 3510–22–S

DEPARTMENT OF COMMERCE

National Oceanic and Atmospheric Administration

50 CFR Part 660

[Docket No. 050801213–5213–01; I.D. 072805B]

RIN 0648–AT53

Fisheries off West Coast States and in the Western Pacific; Western Pacific Pelagic Fisheries; Control Date for Domestic Purse Seine and Longline Pelagic Fisheries in U.S. EEZ of Western Pacific Region

AGENCY: National Marine Fisheries Service (NMFS), National Oceanic and Atmospheric Administration (NOAA), Commerce.

ACTION: Proposed rule; advance notice of proposed rulemaking; notification of control date.

SUMMARY: NMFS announces that persons who enter the pelagic purse seine and longline fisheries in the U.S. exclusive economic zone (EEZ) of the western Pacific region after June 2, 2005 (''control date'') are not guaranteed future participation in the fishery if the Western Pacific Fishery Management Council (WPFMC) recommends, and NMFS approves, a program limiting entry or effort. This action does not commit the WPFMC or NMFS to limit entry, or prevent any other date from being selected for eligibility to participate in the pelagic purse seine or longline fisheries. The WPFMC or NMFS may also use other criteria to limit fishing effort or participation in a limited entry program that is developed in the future.

DATES: Comments must be submitted in writing by October 14, 2005.

ADDRESSES: You may submit comments on this notice identified by I.D. 072805B by any of the following methods:

- E-mail: AT53–PSLLDate@noaa.gov. Include I.D. 072805B in the subject line of the e-mail comment following document identifier: Purse seine and longline control date. Comments sent via e-mail, including all attachments, must not exceed a 10 megabyte file size.
- Federal e-Rulemaking portal: *www.regulations.gov*. Follow the instructions for submitting comments.
- Mail: William L. Robinson, Administrator, NMFS Pacific Islands Region (PIR), 1601 Kapiolani Blvd., Suite 1110, Honolulu, HI 96814.
- Fax: 808–973–2941

FOR FURTHER INFORMATION CONTACT: Robert Harman, NMFS PIR, at 808–944–2271.

SUPPLEMENTARY INFORMATION: On June 2, 2005, at its 127th meeting, the WPFMC recommended a ''control date'' of June 2, 2005, applicable to persons who are contemplating entering the pelagic purse seine (for tunas) and longline fisheries in the U.S. exclusive economic zone (EEZ) around islands of the western Pacific region. The WPFMC requested that this control date be published in the **Federal Register** to notify fishermen that if they enter these fisheries after June 2, 2005, they may not be assured of future access if the WPFMC and/or NMFS decide to limit entry or impose other measures to manage these fisheries.

Establishment of a control date responds to NMFS' notice to the WPFMC, dated December 30, 2004 (69 FR 78397), that overfishing is occurring Pacific-wide on bigeye tuna, and that management action must be taken by the WPFMC to end this overfishing. The WPFMC tentatively has determined that limited access programs for purse seine and longline fisheries in the U.S. EEZ of the western Pacific region might be one of the viable mechanisms to reduce fishing mortality in Pacific bigeye tuna, as a step toward ending overfishing in the pelagic fisheries.

Domestic longline and purse seine vessels operate in the U.S. EEZ, on the high seas, and in foreign EEZs under specific arrangements. Fishery access (in terms of both number of participants and geographical operations) is already limited in several of these fisheries. There is a limited access program in the Hawaii longline fishery, and a similar program will limit access to the American Samoa longline fishery on December 1, 2005. In Hawaii, the pelagic longline fishery is limited to 164 vessels, with about 120 active in recent years. In American Samoa, participation will likely be limited to 138 vessels. There are 65 additional general (open-access) longline permits in the region. Some 64 of these are located in American Samoa, and many of these are expected to qualify under the American Samoa limited entry program. One more general longline permit holder is located in the Commonwealth of the Northern Mariana Islands, but the vessel is inactive. Currently, there are no domestic longline vessels operating out of Guam. Domestic purse seine vessels have access to foreign EEZs under the arrangements of the South Pacific Tuna Treaty. The treaty limits U.S. participation to 40 vessels, plus an additional five for joint ventures. The number of active U.S. purse seine vessels has decreased gradually from 36 in 1999 to 17 in 2005. There has been limited activity in recent years within the U.S. EEZ by purse seiners, specifically around the Pacific Remote Island Areas.

Control dates are intended to discourage speculative entry into fisheries, as new entrants entering the fisheries after the control date are forewarned that they are not guaranteed future participation in the fisheries.

Establishment of this control date does not commit the WPFMC or NMFS to any particular management regime or criteria for entry into the pelagic purse seine or longline fisheries. Fishermen are not guaranteed future participation in the fisheries, regardless of their level of participation before or after the control date. The WPFMC may recommend a different control date or it may recommend a management regime that does not involve a control date.

Other criteria, such as documentation of commercial landings and sales, may be used to determine eligibility for participation in a limited access fishery. The WPFMC and/or NMFS also may choose to take no further action to control entry or access to the fisheries, in which case the control date may be rescinded.

Classification

This advance notice of proposed rulemaking has been determined to be not significant for the purposes of Executive Order 12866.

Authority: 16 U.S.C. 1801 *et seq.*

Dated: August 10, 2005.

James W. Balsiger,

Acting Deputy Assistant Administrator for Regulatory Programs, National Marine Fisheries Service.

[FR Doc. 05–16122 Filed 8–12–05; 8:45 am]

BILLING CODE 3510–22–S

Notices

Federal Register

Vol. 70, No. 156

Monday, August 15, 2005

This section of the FEDERAL REGISTER contains documents other than rules or proposed rules that are applicable to the public. Notices of hearings and investigations, committee meetings, agency decisions and rulings, delegations of authority, filing of petitions and applications and agency statements of organization and functions are examples of documents appearing in this section.

DEPARTMENT OF AGRICULTURE

Animal and Plant Health Inspection Service

[Docket No. 05–044–1]

Notice of Request for Extension of Approval of an Information Collection; National Poultry Improvement Plan

AGENCY: Animal and Plant Health Inspection Service, USDA.

ACTION: Extension of approval of an information collection; comment request.

SUMMARY: In accordance with the Paperwork Reduction Act of 1995, this notice announces the Animal and Plant Health Inspection Service's intention to request an extension of approval of an information collection in support of the National Poultry Improvement Plan.

DATES: We will consider all comments that we receive on or before October 14, 2005.

ADDRESSES: You may submit comments by any of the following methods:

- EDOCKET: Go to *http://www.epa.gov/feddocket* to submit or view public comments, access the index listing of the contents of the official public docket, and to access those documents in the public docket that are available electronically. Once you have entered EDOCKET, click on the ''View Open APHIS Dockets'' link to locate this document.
- *Postal Mail/Commercial Delivery:* Please send four copies of your comment (an original and three copies) to Docket No. 05–044–1, Regulatory Analysis and Development, PPD, APHIS, Station 3C71, 4700 River Road, Unit 118, Riverdale, MD 20737–1238. Please state that your comment refers to Docket No. 05–044–1.

Reading Room: You may read any comments that we receive on this docket in our reading room. The reading room is located in room 1141 of the USDA South Building, 14th Street and Independence Avenue SW., Washington, DC. Normal reading room hours are 8 a.m. to 4:30 p.m., Monday through Friday, except holidays. To be sure someone is there to help you, please call (202) 690–2817 before coming.

Other Information: You may view APHIS documents published in the **Federal Register** and related information on the Internet at *http://www.aphis.usda.gov/ppd/rad/webrepor.html.*

FOR FURTHER INFORMATION CONTACT: For information regarding the National Poultry Improvement Plan, contact Mr. Andrew Rhorer, Senior Coordinator, National Poultry Improvement Plan, VS, APHIS, 1498 Klondike Road, Suite 200, Conyers, GA 30094–5104, (770) 922–3496. For copies of more detailed information on the information collection, contact Mrs. Celeste Sickles, APHIS' Information Collection Coordinator, at (301) 734–7477.

SUPPLEMENTARY INFORMATION:

Title: National Poultry Improvement Plan.

OMB Number: 0579–0007.

Type of Request: Extension of approval of an information collection.

Abstract: The Animal and Plant Health Inspection Service (APHIS) of the United States Department of Agriculture is responsible for, among other things, administering the National Poultry Improvement Plan (NPIP), the primary purpose of which is to protect the health of the U.S. poultry population. NPIP is a voluntary Federal-State-industry cooperative program for the improvement of poultry breeding flocks and products through disease control techniques.

Administering the NPIP requires us to engage in a number of information collection activities, which are described below. We are asking the Office of Management and Budget (OMB) to approve our use of this information collection activities, which are critical to our ability to prevent the spread of contagious poultry diseases within the United States.

Flock Selecting and Testing Report (VS Form 9–2)

This form is used by authorized agents and State inspectors when breeding flocks are selected and tested. The form provides space for the number of birds tested and the results of the test. This form also identifies a given flock as to owner, hatchery affiliation, stock, type, purpose, classification, and most importantly, flock location. Since most of the flocks are supply flocks for the same hatchery, it is extremely important to know the location of the flock. The information on this form is of critical importance when an investigation must be conducted to determine the source of a hatchery-disseminated or egg-transmitted disease.

Report of Sales of Hatching Eggs, Chicks, and Poults (VS Form 9–3)

NPIP participants use this form to record any interstate sales of their hatching eggs, chicks, and poults. This document is used by both APHIS and the receiving State to monitor the movements of these items. This form also serves as a vital investigative aid when APHIS is attempting to track down the source of a poultry disease. These records must be maintained by producers for 3 years.

Summary of Breeding Flock Participation (VS Form 9–4)

This report form, which is completed by State animal health authorities, contains a summary of blood testing work and of flock participation by classes and breeding status. It is distributed to Official State Agencies from our offices at the end of the testing year in June and must be returned to us in July. With this information, we can publish our Tables on Hatchery and Flock Participation, which serve as an important tool in monitoring the health status of participating flocks.

Report of Hatcheries, Dealers, and Independent Flocks Participating in the NPIP (VS Form 9–5)

This form is completed by the official State Agency to record an NPIP program participant's decision to withdraw from the program, or to record a producer's decision to join the program. The form requests information on the location and size of each flock owned by the producer. It is important for any individual participating in the NPIP to report the existence and location of all his or her flocks, since the disease status of one flock can affect the health of other flocks. Failing to report the existence and location of all flocks could have detrimental effects upon our ability to effectively monitor the health

status of flocks within a given State. In the event of a poultry disease outbreak, this lack of information could prove detrimental to our efforts to promptly contain and eradicate the disease. This document is also used to record a change in disease program classification. This form allows us to effectively monitor participation in the plan, and to maintain an up-to-date list of program participants, their addresses, and other important information concerning their poultry operations.

Report of Salmonella Isolations to NPIP Official State Agencies (VS Form 9–6)

When salmonella organisms are isolated from a specimen that originated in an NPIP participating hatchery, State veterinary authorities must attempt to locate the source of the infection. The results of this investigation, and the actions taken to eliminate the infection, must be reported to APHIS by the State. The VS Form 9–6 is used for this purpose.

Investigation of Salmonella Isolations in Poultry (VS Form 9–7)

If a multi-State disease outbreak occurs, the NPIP will conduct an investigation and share the resulting information with all the States involved. The VS Form 9–7 is one of the tools used to complete this investigation; it provides the investigating State agency with a uniform method of compiling and analyzing information that can subsequently be used to study trends, economic importance, and other matters. This form is arranged in sections so that the disease investigations can be completed in stages by different inspectors, depending upon the location of the flock, hatchery, and breeding flock. The inspector obtains some of the needed information by interviewing the appropriate poultry producers. When several States are involved in a pullorum-typhoid infection, the completed form will be sent to each of the States involved so that all of them will be aware of the investigation's outcome.

Flock Inspection and Check Testing Report (VS Form 9–8)

This form is completed by a State inspector to recheck a flock that has already been tested for pullorum-typhoid. This retesting is performed randomly, periodically, and unannounced as a means of verifying that pullorum-typhoid testing was correctly carried out on a given flock. The form contains such information as the location of the flock, the flock owner's name and address, the date of the last pullorum-typhoid test, the number of birds tested, and other relevant testing information.

Hatchery Inspection Form (VS Form 9–9)

This form is completed by a State inspector while inspecting a hatchery to determine if it is in compliance with NPIP standards. On this form the inspector notes the level of cleanliness in the facility and its equipment, as well as the effectiveness of the sanitation procedures in place at the facility. On this form the inspector also records the number of incubators and their condition, the make and model of these units, their egg capacity for both setting and hatching trays, the source of the supply flock, whether the flock is a multiplier or primary flock, and the flock's official health status classification. The primary reason for the inspection is to ensure that the facility's birds originate from approved NPIP sources. Hatcheries are generally inspected once each year.

Sentinel Birds Banded for Identification Prior to Flock Vaccination

When a federally licensed *Salmonella enteritidis* bacterin is used to vaccinate a flock, 350 birds must remain unvaccinated so that they can be used to conduct the necessary serological tests for *Salmonella pullorum* and *Salmonella gallinarum.* These test birds must be banded so that they can be recognized as sentinel birds.

Request for Salmonella Serotyping (VS Form 10–3)

This is a National Veterinary Services Laboratories (NVSL) form that must be completed by State or APHIS personnel who are submitting samples for salmonella serotyping. If samples were sent to NVSL without this form, lab personnel would have no way of identifying any given sample as to the flock from which it came, or even the disease for which the sample is to be tested.

Printing and Mailing Computerized Printouts

These printouts are constructed by hatchery operators who ship large numbers of small chick orders all across the United States. These computerized lists contain all the information found on a VS Form 9–3, but reduces the paperwork load substantially because they are computer generated. These printouts are sent every month to those States that request them. The States use these printouts to monitor the number of small chicks they are receiving.

Purpose of Notice

The purpose of this notice is to solicit comments from the public (as well as affected agencies) concerning our information collection. These comments will help us:

(1) Evaluate whether the collection of information is necessary for the proper performance of the functions of the Agency, including whether the information will have practical utility;

(2) Evaluate the accuracy of our estimate of the burden of the collection of information, including the validity of the methodology and assumptions used;

(3) Enhance the quality, utility, and clarity of the information to be collected; and

(4) Minimize the burden of the collection of information on those who are to respond, through use, as appropriate, of automated, electronic, mechanical, and other collection technologies, e.g., permitting electronic submission of responses.

Estimate of burden: The public reporting burden for this collection of information is estimated to average 0.5112739 hours per response.

Respondents: Flock owners, breeders, hatchery operators, and State veterinary medical officers.

Estimated annual number of respondents: 10,000.

Estimated annual number of responses per respondent: 7.3.

Estimated annual number of responses: 73,000.

Estimated total annual burden on respondents: 37,323 hours. (Due to averaging, the total annual burden hours may not equal the product of the annual number of responses multiplied by the reporting burden per response.)

All responses to this notice will be summarized and included in the request for OMB approval. All comments will also become a matter of public record.

Done in Washington, DC, this 9th day of August 2005.

Kevin Shea,

Acting Administrator, Animal and Plant Health Inspection Service.

[FR Doc. E5–4405 Filed 8–12–05; 8:45 am]

BILLING CODE 3410–34–P

DEPARTMENT OF AGRICULTURE

Forest Service

Ochoco National Forest, Lookout Mountain Ranger District; Oregon; East Maurys Fuels and Vegetation Management Project

AGENCY: Forest Service, USDA.

ACTION: Notice of intent to prepare an environmental impact statement.

SUMMARY: The USDA Forest Service is proposing to conduct timber harvest, noncommercial thinning, and fuels reduction activities in the eastern half of the Maury Mountains. The proposal includes the connected action of constructing 20.9 miles of road. The project area covers approximately 24,250 acres.

DATES: Comments concerning the scope of the analysis must be received by October 1, 2005. The draft environmental impact statement is expected by May 2006 and the final environmental impact statement is expected in November 2006.

ADDRESSES: Send written comments to Arthur J. Currier, District Ranger, Lookout Mountain Ranger District, Ochoco National Forest, 3160 NE Third Street, Prineville, Oregon 97754. Alternately, electronic comments can be sent to *comments-pacificnorthwest-ochoco@fs.fed.us.*

FOR FURTHER INFORMATION CONTACT: Kathy Farrell, Project Leader, at the address listed above.

SUPPLEMENTARY INFORMATION:

Purpose and Need for Action

The purpose of this proposal is to (1) maintain and increase late and old structure (LOS) stands especially in areas deficient of large trees; (2) reduce the amount of dense, overstocked stands and improve health and vigor, while maintaining a mosaic of tree species and ages; (3) maintain and increase diversity of native plant communities, such as aspen and broadleaf shrubs; (4) reduce juniper encroachment and restore grass, forb, and shrub communities on western juniper sites; and, (5) reduce fuel loads and the potential for high-intensity wildfires.

Proposed Action

The Lookout Mountain Ranger District is proposing to manage vegetation through commercial timber harvest, noncommercial thinning, and fuel reduction activities. The proposed action includes approximately 6,850 acres of commercial harvest, 11,130 acres of noncommercial thinning, and 11,140 acres of fuel reduction treatments. Fuel reduction treatments include approximately 7,500 acres of prescribed fire, and 3,700 acres of grapple and hand piling. Commercial harvest includes tractor, skyline, and horse logging systems. Areas identified as tractor logging are areas where heavy equipment, such as logging tractors, will be used to remove a commercial product. Road construction activities include 20.9 miles of new road construction, 21.8 miles of reconstructing roads on an existing road bed, and opening 24.6 miles of roads that are currently closed. Newly constructed roads and roads that are reopened would be closed after harvest activities are complete.

Possible Alternatives

A this time, the Forest Service is considering at least three alternatives. The no action alternative is the baseline for comparison and will analyze the effects of natural processes. Ongoing activities, such as road maintenance, noxious weeds treatments, and recreational use, would continue. Access for public and administrative purposes would continue on the existing transportation system. Alternative 2, the proposed action, will analyze the effects of timber harvest, noncommercial thinning, and prescribed fire activities, along with the connected road construction activities. The third alternative being considered at this time would analyze the effects of only conducting noncommercial thinning and prescribed fire activities. Other possible alternatives may reduce or restrict the amount of road construction activities. The action alternatives will examine combinations and degrees of activities in order to meet the purpose of and need for action and concerns stated during the public scoping process.

Responsible Official

The responsible official for this project is Larry Timchak, Forest Supervisor, Ochoco National Forest, 3160 NE Third Street, Prineville, Oregon 97754.

Nature of Decision To Be Made

The Forest Supervisor will decide whether to conduct timber harvest, noncommercial thinning, and prescribe fire treatments within the East Maurys project area. The decision will be based on the information disclosed in the EIS, and the goals, objectives, and desired future conditions as stated in the Forest Plan. The responsible official will consider significant issues, public comments, environmental consequences, and compliance with applicable laws, regulations, and policies in making his decision. The rationale for the decision will be stated in the Record of Decision for the project.

Scoping Process

The Lookout Mountain Ranger District intends to scope for information by mailing letters to persons and organizations interested or potentially affected by the proposed action. This project will also be included in the Ochoco National Forest Schedule of Projects for the duration of the environmental analysis.

Preliminary Issues

The Lookout Mountain Ranger District in cooperation with the Crook County Natural Resources Planning Committee has identified one preliminary issue related to the amount of proposed road construction. The Lookout Mountain Ranger District will complete a roads analysis prior to issuing the Draft Environmental Impact Statement. Alternatives that reduce or restrict road construction may be considered.

Comment Requested

This notice of intent is part of the scoping process that will guide the development of the environmental impact statement. The primary purpose of scoping is to gather public comments, issues, and concerns regarding the proposed action. Comments, issues, and concerns may be used to formulate alternatives. Comments are most helpful if they are as specific as possible and relate to the proposed action. Comments should include the name, address, and, if possible, telephone number of the commenter. Electronic comments must be submitted as part of the actual e-mail message, or as an attachment in plain text (.txt), Microsoft Word (.doc), rich text format (.rtf), or portable document format (.pdf). Comments received in response to this solicitation, including the names and addresses of those who comment, will be considered part of the public record and will be available for public inspection.

Early Notice of Importance of Public Participation in Subsequent Environmental Review

A draft environmental impact statement will be prepared and made available for comment. The comment period on the draft environmental impact statement will be 45 days from the date the Environmental Protection Agency publishes the notice of availability in the **Federal Register**.

The Forest Service believes, at this early stage, it is important to give reviewers notice of several court rulings related to public participation in the environmental review process. First, reviewers of draft environmental impact statements must structure their participation in the environmental review of the proposal so that it is meaningful and alerts an agency to the reviewer's position and contentions. *Vermont Yankee Nuclear Power Corp. Court.* v. *NRDC*, 435 U.S. 519, 553 (1978). Also, environmental objections

that could be raised at the draft environmental impact statement stage but that are not raised until after completion of the final environmental impact statement may be waived or dismissed by the courts. *City of Angoon* v. *Hodel,* 803 F.2d 1016, 1022 (9th Cir. 1986) and *Wisconsin Heritages, Inc.* v. *Harris*, 490 F. Supp. 1334, 1338 (E.D. Wis. 1980). Because of these court rulings, it is very important that those interested in this proposed action participate by the close of the 45-day comment period so that substantive comments and objections are made available to the Forest Service at a time when it can meaningfully consider them and respond to them in the final environmental impact statement.

To assist the Forest Service in identifying and considering issues and concerns on the proposed action, comments on the draft environmental impact statement should be as specific as possible. It is also helpful if comments refer to specific pages or chapters of the draft statement. Comments may also address the adequacy of the draft environmental impact statement or the merits of the alternatives formulated and discussed in the statement. Reviewers may wish to refer to the Council on Environmental Quality Regulations for implementing the procedural provisions of the National Environmental Policy Act at 40 CFR 1503.3 in addressing these points.

Dated: August 3, 2005.

Arthur J. Currier,

District Ranger.

[FR Doc. 05–16123 Filed 8–12–05; 8:45 am]

BILLING CODE 3410–11–M

DEPARTMENT OF AGRICULTURE

Forest Service

Notice of Lincoln County Resource Advisory Committee Meeting

AGENCY: Forest Service, USDA.

ACTION: Notice of meeting.

SUMMARY: Pursuant to the authorities in the Federal Advisory Committee Act (Pub. L. 92–463) and under the Secure Rural Schools and Community Self-Determination Act of 2000 (Pub. L. 106–393) the Kootenai National Forest's Lincoln County Resource Advisory Committee will meet on Tuesday, September 6, 2005 at 6 p.m. at the Forest Supervisor's Office in Libby, Montana for a business meeting. The meeting is open to the public.

DATES: September 6, 2005.

ADDRESSES: Forest Supervisor's Office, 1101 U.S. Hwy. 2 West, Libby, Montana.

FOR FURTHER INFORMATION CONTACT: Barbara Edgmon, Committee Coordinator, Kootenai National Forest at (406) 293–6211, or e-mail *bedgmon@fs.fed.us*.

SUPPLEMENTARY INFORMATION: Agenda topics include review and selection of submitted proposals for funding in fiscal year 2006, and receiving public comment. If the meeting date or location is changed, notice will be posted in the local newspapers, including the Daily Interlake based in Kalispell, Montana.

Dated: August 5, 2005.

Bob Castaneda,

Forest Supervisor.

[FR Doc. 05–16106 Filed 8–12–05; 8:45 am]

BILLING CODE 3410–11–M

DEPARTMENT OF COMMERCE

International Trade Administration

(A–588–824)

Certain Corrosion–Resistant Carbon Steel Flat Products From Japan: Final Results of Antidumping Duty Changed Circumstances Review and Determination Not to Revoke, In Part

AGENCY: Import Administration, International Trade Administration, Department of Commerce.

SUMMARY: On December 7, 2004, the Department of Commerce (''the Department'') published a notice of initiation of a changed circumstances review regarding certain corrosion–resistant carbon steel flat products from Japan in response to a request for partial revocation received from Metal One Corporation (''Metal One''), and invited interested parties to submit comments. On December 27, 2004, United States Steel (''U.S. Steel'') submitted a letter opposing the request for revocation. *See Letter from U.S. Steel*. On June 21, 2005, the Department published the preliminary results of the changed circumstances review and preliminarily determined that, as the domestic industry is interested in maintaining the order, revocation is not warranted. *See Certain Corrosion–Resistant Carbon Steel Flat Products from Japan: Preliminary Results of Antidumping Duty Changed Circumstances Review and Intent Not to Revoke, In Part*. 70 FR 35618 (June 21, 2005). Subsequent to the preliminary results, the Department received no case or rebuttal briefs regarding this changed circumstances review. Therefore, for the final results we continue to find that pursuant to section 751(d) of the Tariff Act of 1930, as amended (''the Act''), and 19 CFR 351.222(g)(1)(I), changed circumstances do not exist to warrant revocation of the order in part.

EFFECTIVE DATE: August 15, 2005.

FOR FURTHER INFORMATION CONTACT: Christopher Hargett, AD/CVD Operations, Office 3, Import Administration, International Trade Administration, U.S. Department of Commerce, 14th Street and Constitution Avenue, NW, Washington, DC 20230; telephone (202) 482–4161.

SUPPLEMENTARY INFORMATION:

Background

On October 13, 2004, Metal One filed a request for a changed circumstances review on diffusion–annealed nickel plate, in accordance with 19 CFR 351.216(b). *See Letter from Metal One*. On December 7, 2004, the Department published in the **Federal Register** a notice of initiation of a changed circumstances review on certain corrosion–resistant carbon steel flat products from Japan with respect to diffusion–annealed nickel plate. *See Notice of Initiation of Antidumping Duty Changed Circumstances Review*, 69 FR 70633 (December 7, 2004).

On December 27, 2004, U.S. Steel submitted comments on the Department's initiation of a changed circumstances review. Specifically, U.S. Steel asserted that the domestic producers maintain interest in the products included in the changed circumstances review. U.S. Steel stated that its production of the domestic like product is well in excess of 15 percent of total domestic production. *See Letter from U.S. Steel*, December 27, 2004.

On June 21, 2005, the Department published the preliminary results of the changed circumstances review and preliminarily determined that Metal One had not shown that substantially all producers of domestic like products have expressed a lack of interest in the order, and that Metal One has not met the regulatory requirements to warrant revocation, in part, through a changed circumstances review. *See Ceratin Corrosion–Resistant Carbon Steel Flat Products from Japan: Preliminary Results of Antidumping Duty Changed Circumstances Review and Intent Not to Revoke, In Part*. 70 FR 35618 (June 21, 2005). We did not receive any comments on our preliminary results.

Scope of Order

The products subject to this order include flat–rolled carbon steel products, of rectangular shape, either clad, plated, or coated with corrosion–resistant metals such as zinc, aluminum, or zinc-, aluminum-, nickel- or iron–based alloys, whether or not corrugated

or painted, varnished or coated with plastics or other nonmetallic substances in addition to the metallic coating, in coils (whether or not in successively superimposed layers) and of a width of 0.5 inch or greater, or in straight lengths which, if of a thickness less than 4.75 mm, are of a width of 0.5 inch or greater and which measures at least 10 times the thickness, or if of a thickness of 4.75 mm or more, are of a width which exceeds 150 mm and measures at least twice the thickness, as currently classifiable in the HTS under item numbers: 7210.30.0030, 7210.30.0060, 7210.41.0000, 7210.49.0030, 7210.49.0090, 7210.61.0000, 7210.69.0000, 7210.70.6030, 7210.70.6060, 7210.70.6090, 7210.90.1000, 7210.90.6000, 7210.90.9000, 7212.20.0000, 7212.30.1030, 7212.30.1090, 7212.30.3000, 7212.30.5000, 7212.40.1000, 7212.40.5000, 7212.50.0000, 7212.60.0000, 7215.90.1000, 7215.90.3000, 7215.90.5000, 7217.20.1500, 7217.30.1530, 7217.30.1560, 7217.90.1000, 7217.90.5030, 7217.90.5060, and 7217.90.5090.

Included in the order are flat–rolled products of nonrectangular cross-section where such cross-section is achieved subsequent to the rolling process (*i.e.*, products which have been ''worked after rolling'') -- for example, products which have been beveled or rounded at the edges.

Excluded from the scope of the order are flat–rolled steel products either plated or coated with tin, lead, chromium, chromium oxides, both tin and lead (''terne plate''), or both chromium and chromium oxides (''tin–free steel''), whether or not painted, varnished or coated with plastics or other nonmetallic substances in addition to the metallic coating. Also excluded from the scope of the order are clad products in straight lengths of 0.1875 inch or more in composite thickness and of a width which exceeds 150 mm and measures at least twice the thickness. Also excluded from the scope of the order are certain clad stainless flat–rolled products, which are three–layered corrosion- resistant carbon steel flat–rolled products less than 4.75 mm in composite thickness that consist of a carbon steel flat–rolled product clad on both sides with stainless steel in a 20%-60%-20% ratio. *See Antidumping Duty Order: Certain Corrosion–Resistant Carbon Steel Flat Products From Japan*, 58 FR 44163 (August 19, 1993).

Exclusions Due to Changed Circumstances Reviews

The Department has issued the following rulings to date:

Excluded from the scope of this order are imports of certain corrosion–resistant carbon steel flat products meeting the following specifications: widths ranging from 10 mm (0.394 inches) through 100 mm (3.94 inches); thicknesses, including coatings, ranging from 0.11 mm (0.004 inches) through 0.60 mm (0.024 inches); and a coating that is from 0.003 mm (0.00012 inches) through 0.005 mm (0.000196 inches) in thickness and that is comprised of three evenly applied layers, the first layer consisting of 99% zinc, 0.5% cobalt, and 0.5% molybdenum, followed by a layer consisting of chromate, and finally a layer consisting of silicate. *See Certain Corrosion–Resistant Carbon Steel Flat Products From Japan: Final Results of Changed Circumstances Antidumping Duty Administrative Review, and Revocation in Part of Antidumping Duty Order*, 62 FR 66848 (December 22, 1997).

Also excluded from the scope of this order are imports of subject merchandise meeting all of the following criteria: (1) Widths ranging from 10 mm (0.394 inches) through 100 mm (3.94 inches); (2) thicknesses, including coatings, ranging from 0.11 mm (0.004 inches) through 0.60 mm (0.024 inches); and (3) a coating that is from 0.003 mm (0.00012 inches) through 0.005 mm (0.000196 inches) in thickness and that is comprised of either two evenly applied layers, the first layer consisting of 99% zinc, 0.5% cobalt, and 0.5% molybdenum, followed by a layer consisting of chromate, or three evenly applied layers, the first layer consisting of 99% zinc, 0.5% cobalt, and 0.5% molybdenum followed by a layer consisting of chromate, and finally a layer consisting of silicate. *See Certain Corrosion–Resistant Carbon Steel Flat Products From Japan: Final Results of Changed Circumstances Antidumping Duty Administrative Review, and Revocation in Part of Antidumping Duty Order*, 64 FR 14861 (March 29, 1999).

Also excluded from the scope of this order are: (1) Carbon steel flat products measuring 1.84 mm in thickness and 43.6 mm or 16.1 mm in width consisting of carbon steel coil (SAE 1008) clad with an aluminum alloy that is balance aluminum, 20% tin, 1% copper, 0.3% silicon, 0.15% nickel, less than 1% other materials and meeting the requirements of SAE standard 783 for Bearing and Bushing Alloys; and (2) carbon steel flat products measuring 0.97 mm in thickness and 20 mm in width consisting of carbon steel coil (SAE 1008) with a two–layer lining, the first layer consisting of a copper–lead alloy powder that is balance copper, 9% to 11% tin, 9% to 11% lead, less than 1% zinc, less than 1% other materials and meeting the requirements of SAE standard 792 for Bearing and Bushing Alloys, the second layer consisting of 45% to 55% lead, 38% to 50% PTFE, 3% to 5% molybdenum disulfide and less than 2% other materials. *See Certain Corrosion–Resistant Carbon Steel Flat Products From Japan: Final Results of Changed Circumstances Review, and Revocation in Part of Antidumping Duty Order*, 64 FR 57032 (October 22, 1999).

Also excluded from the scope of the order are imports of doctor blades meeting the following specifications: carbon steel coil or strip, plated with nickel phosphorous, having a thickness of 0.1524 mm (0.006 inches), a width between 31.75 mm (1.25 inches) and 50.80 mm (2.00 inches), a core hardness between 580 to 630 HV, a surface hardness between 900--990 HV; the carbon steel coil or strip consists of the following elements identified in percentage by weight: 0.90% to 1.05% carbon; 0.15% to 0.35% silicon; 0.30% to 0.50% manganese; less than or equal to 0.03% of phosphorous; less than or equal to 0.006% of sulfur; other elements representing 0.24%; and the remainder of iron. *See Certain Corrosion–Resistant Carbon Steel Flat Products From Japan: Final Results of Changed Circumstances Review, and Revocation in Part of Antidumping Duty Order*, 65 FR 53983 (September 6, 2000).

Also excluded from the scope of the order are imports of carbon steel flat products meeting the following specifications: carbon steel flat products measuring 1.64 mm in thickness and 19.5 mm in width consisting of carbon steel coil (SAE 1008) with a lining clad with an aluminum alloy that is balance aluminum; 10 to 15% tin; 1 to 3% lead; 0.7 to 1.3% copper; 1.8 to 3.5% silicon; 0.1 to 0.7% chromium; less than 1% other materials and meeting the requirements of SAE standard 783 for Bearing and Bushing Alloys. *See Certain Corrosion–Resistant Carbon Steel Flat Products From Japan: Final Results of Changed Circumstances Review, and Revocation in Part of Antidumping Duty Order*, 66 FR 8778 (February 2, 2001).

Also excluded from the scope of the order are carbon steel flat products meeting the following specifications: (1) Carbon steel flat products measuring 0.975 mm in thickness and 8.8 mm in width consisting of carbon steel coil (SAE 1012) clad with a two–layer lining, the first layer consisting of a copper–

lead alloy powder that is balance copper, 9%-11% tin, 9%-11% lead, maximum 1% other materials and meeting the requirements of SAE standard 792 for Bearing and Bushing Alloys, the second layer consisting of 13%-17% carbon, 13%-17% aromatic polyester, with a balance (approx. 66%-74%) of polytetrafluorethylene (''PTFE''); and (2) carbon steel flat products measuring 1.02 mm in thickness and 10.7 mm in width consisting of carbon steel coil (SAE 1008) with a two–layer lining, the first layer consisting of a copper–lead alloy powder that is balance copper, 9%-11% tin, 9%-11% lead, less than 0.35% iron, and meeting the requirements of SAE standard 792 for Bearing and Bushing Alloys, the second layer consisting of 45%-55% lead, 3%-5% molybdenum disulfide, with a balance (approx. 40%-52%) of PTFE. *See Certain Corrosion–Resistant Carbon Steel Flat Products From Japan: Notice of Final Results of Changed Circumstances Review, and Revocation in Part of Antidumping Duty Order*, 66 FR 15075 (March 15, 2001).

Also excluded from this order are products meeting the following specifications: carbon steel coil or strip, measuring 1.93 mm or 2.75 mm (0.076 inches or 0.108 inches) in thickness, 87.3 mm or 99 mm (3.437 inches or 3.900 inches) in width, with a low carbon steel back comprised of: carbon under 8%, manganese under 0.4%, phosphorous under 0.04%, and sulfur under 0.05%; clad with aluminum alloy comprised of: 0.7% copper, 12% tin, 1.7% lead, 0.3% antimony, 2.5% silicon, 1% maximum total other (including iron), and remainder aluminum. Also excluded from this order are products meeting the following specifications: carbon steel coil or strip, clad with aluminum, measuring 1.75 mm (0.069 inches) in thickness, 89 mm or 94 mm (3.500 inches or 3.700 inches) in width, with a low carbon steel back comprised of: carbon under 8%, manganese under 0.4%, phosphorous under 0.04%, and sulfur under 0.05%; clad with aluminum alloy comprised of: 0.7% copper, 12% tin, 1.7% lead, 2.5% silicon, 0.3% antimony, 1% maximum total other (including iron), and remainder aluminum. *See Certain Corrosion–Resistant Carbon Steel Flat Products From Japan: Notice of Final Results of Changed Circumstances Review, and Revocation in Part of Antidumping Duty Order*, 66 FR 20967 (April 26, 2001).

Also excluded from this order are products meeting the following specifications: carbon steel coil or strip, measuring a minimum of and including 1.10 mm to a maximum of and including 4.90 mm in overall thickness, a minimum of and including 76.00 mm to a maximum of and including 250.00 mm in overall width, with a low carbon steel back comprised of: carbon under 0.10%, manganese under 0.40%, phosphorous under 0.04%, sulfur under 0.05%, and silicon under 0.05%; clad with aluminum alloy comprised of: under 2.51% copper, under 15.10% tin, and remainder aluminum as listed on the mill specification sheet. *See Certain Corrosion–Resistant Carbon Steel Flat Products From Japan: Notice of Final Results of Changed Circumstances Review, and Revocation in Part of Antidumping Duty Order*, 67 FR 7356 (February 19, 2002).

Also excluded from this order are products meeting the following specifications: (1) Diffusion–annealed, non–alloy nickel–plated carbon products, with a substrate of cold–rolled battery grade sheet (''CRBG'') with both sides of the CRBG initially electrolytically plated with pure, unalloyed nickel and subsequently annealed to create a diffusion between the nickel and iron substrate, with the nickel plated coating having a thickness of 0–5 microns per side with one side equaling at least 2 microns; and with the nickel carbon sheet having a thickness of from 0.004'' (0.10 mm) to 0.030'' (0.762 mm) and conforming to the following chemical specifications (%): C <= 0.08; Mn <= 0.45; P <= 0.02; S <= 0.02; Al <= 0.15; and Si <= 0.10; and the following physical specifications: Tensile = 65 KSI maximum; Yield = 32 - 55 KSI; Elongation = 18% minimum (aim 34%); Hardness = 85 - 150 Vickers; Grain Type = Equiaxed or Pancake; Grain Size (ASTM) = 7–12; Delta r value = aim less than 0.2; Lankford value = <== 1.2.; and (2) next generation diffusion–annealed nickel plate meeting the following specifications: (a) nickel–graphite plated, diffusion–annealed, tin–nickel plated carbon products, with a natural composition mixture of nickel and graphite electrolytically plated to the top side of diffusion–annealed tin–nickel plated carbon steel strip with a cold rolled or tin mill black plate base metal conforming to chemical requirements based on AISI 1006; having both sides of the cold rolled substrate electrolytically plated with natural nickel, with the top side of the nickel plated strip electrolytically plated with tin and then annealed to create a diffusion between the nickel and tin layers in which a nickel–tin alloy is created, and an additional layer of mixture of natural nickel and graphite then electrolytically plated on the top side of the strip of the nickel–tin alloy; having a coating thickness: top side: nickel–graphite, tin–nickel layer <== 1.0 micrometers; tin layer only <== 0.05 micrometers, nickel–graphite layer only <= 0.2 micrometers, and bottom side: nickel layer <== 1.0 micrometers; (b) nickel–graphite, diffusion–annealed, nickel plated carbon products, having a natural composition mixture of nickel and graphite electrolytically plated to the top side of diffusion–annealed nickel plated steel strip with a cold rolled or tin mill black plate base metal conforming to chemical requirements based on AISI 1006; with both sides of the cold rolled base metal initially electrolytically plated with natural nickel, and the material then annealed to create a diffusion between the nickel and the iron substrate; with an additional layer of natural nickel–graphite then electrolytically plated on the top side of the strip of the nickel plated steel strip; with the nickel–graphite, nickel plated material sufficiently ductile and adherent to the substrate to permit forming without cracking, flaking, peeling, or any other evidence of separation; having a coating thickness: top side: nickel–graphite, tin–nickel layer <== 1.0 micrometers; nickel–graphite layer <== 0.5 micrometers; bottom side: nickel layer <== 1.0 micrometers; (c) diffusion–annealed nickel–graphite plated products, which are cold–rolled or tin mill black plate base metal conforming to the chemical requirements based on AISI 1006; having the bottom side of the base metal first electrolytically plated with natural nickel, and the top side of the strip then plated with a nickel–graphite composition; with the strip then annealed to create a diffusion of the nickel–graphite and the iron substrate on the bottom side; with the nickel–graphite and nickel plated material sufficiently ductile and adherent to the substrate to permit forming without cracking, flaking, peeling, or any other evidence of separation; having coating thickness: top side: nickel–graphite layer <== 1.0 micrometers; bottom side: nickel layer <== 1.0 micrometers; (d) nickel–phosphorous plated diffusion–annealed nickel plated carbon product, having a natural composition mixture of nickel and phosphorus electrolytically plated to the top side of a diffusion–annealed nickel plated steel strip with a cold rolled or tin mill black plate base metal conforming to the chemical requirements based on AISI 1006; with both sides of the base metal initially electrolytically plated with natural nickel, and the material then annealed

to create a diffusion of the nickel and iron substrate; another layer of the natural nickel–phosphorous then electrolytically plated on the top side of the nickel plated steel strip; with the nickel–phosphorous, nickel plated material sufficiently ductile and adherent to the substrate to permit forming without cracking, flaking, peeling or any other evidence of separation; having a coating thickness: top side: nickel–phosphorous, nickel layer <== 1.0 micrometers; nickel–phosphorous layer <== 0.1 micrometers; bottom side: nickel layer <== 1.0 micrometers; (e) diffusion–annealed, tin–nickel plated products, electrolytically plated with natural nickel to the top side of a diffusion–annealed tin–nickel plated cold rolled or tin mill black plate base metal conforming to the chemical requirements based on AISI 1006; with both sides of the cold rolled strip initially electrolytically plated with natural nickel, with the top side of the nickel plated strip electrolytically plated with tin and then annealed to create a diffusion between the nickel and tin layers in which a nickel–tin alloy is created, and an additional layer of natural nickel then electrolytically plated on the top side of the strip of the nickel–tin alloy; sufficiently ductile and adherent to the substrate to permit forming without cracking, flaking, peeling or any other evidence of separation; having coating thickness: top side: nickel–tin-nickel combination layer <== 1.0 micrometers; tin layer only <== 0.05 micrometers; bottom side: nickel layer <== 1.0 micrometers; and (f) tin mill products for battery containers, tin and nickel plated on a cold rolled or tin mill black plate base metal conforming to chemical requirements based on AISI 1006; having both sides of the cold rolled substrate electrolytically plated with natural nickel; then annealed to create a diffusion of the nickel and iron substrate; then an additional layer of natural tin electrolytically plated on the top side; and again annealed to create a diffusion of the tin and nickel alloys; with the tin–nickel, nickel plated material sufficiently ductile and adherent to the substrate to permit forming without cracking, flaking, peeling or any other evidence of separation; having a coating thickness: top side: nickel–tin layer <== 1 micrometer; tin layer alone <== 0.05 micrometers; bottom side: nickel layer <== 1.0 micrometer. *See Certain Corrosion–Resistant Carbon Steel Flat Products From Japan: Notice of Final Results of Changed Circumstances Review, and Revocation in Part of Antidumping Duty Order*, 67 FR 47768 (July 22, 2002).

Also excluded from this order are products meeting the following specifications: (1) Widths ranging from 10 mm (0.394 inches) through 100 mm (3.94 inches); (2) thicknesses, including coatings, ranging from 0.11 mm (0.004 inches) through 0.60 mm (0.024 inches); and (3) a coating that is from 0.003 mm (0.00012 inches) through 0.005 mm (0.000196 inches) in thickness and that is comprised of either two evenly applied layers, the first layer consisting of 99% zinc, 0.5% cobalt, and 0.5% molybdenum, followed by a layer consisting of phosphate, or three evenly applied layers, the first layer consisting of 99% zinc, 0.5% cobalt, and 0.5% molybdenum followed by a layer consisting of phosphate, and finally a layer consisting of silicate. *See Certain Corrosion–Resistant Carbon Steel Flat Products From Japan: Notice of Final Results of Changed Circumstances Review, and Revocation in Part of Antidumping Duty Order*, 67 FR 57208 (September 9, 2002).

Also excluded from this order are products meeting the following specifications: (1) Flat–rolled products (provided for in HTSUS subheading 7210.49.00), other than of high–strength steel, known as ''ASE Iron Flash'' and either: (A) having a base layer of zinc–based zinc–iron alloy applied by hot–dipping and a surface layer of iron–zinc alloy applied by electrolytic process, the weight of the coating and plating not over 40% by weight of zinc; or (B) two–layer-coated corrosion–resistant steel with a coating composed of (a) a base coating layer of zinc–based zinc–iron alloy by hot–dip galvanizing process, and (b) a surface coating layer of iron–zinc alloy by electro–galvanizing process, having an effective amount of zinc up to 40% by weight, and (2) corrosion resistant continuously annealed flat–rolled products, continuous cast, the foregoing with chemical composition (percent by weight): carbon not over 0.06% by weight, manganese 0.20 or more but not over 0.40, phosphorus not over 0.02, sulfur not over 0.023, silicon not over 0.03, aluminum 0.03 or more but not over 0.08, arsenic not over 0.02, copper not over 0.08 and nitrogen 0.003 or more but not over 0.008; and meeting the characteristics described below: (A) Products with one side coated with a nickel–iron-diffused layer which is less than 1 micrometer in thickness and the other side coated with a two–layer coating composed of a base nickel–iron-diffused coating layer and a surface coating layer of annealed and softened pure nickel, with total coating thickness for both layers of more than 2 micrometers; surface roughness (RA–microns) 0.18 or less; with scanning electron microscope (SEM) not revealing oxides greater than 1 micron; and inclusion groups or clusters shall not exceed 5 microns in length; (B) products having one side coated with a nickel–iron-diffused layer which is less than 1 micrometer in thickness and the other side coated with a four–layer coating composed of a base nickel–iron-diffused coating layer; with an inner middle coating layer of annealed and softened pure nickel, an outer middle surface coating layer of hard nickel and a topmost nickel–phosphorus-plated layer; with combined coating thickness for the four layers of more than 2 micrometers; surface roughness (RA–microns) 0.18 or less; with SEM not revealing oxides greater than 1 micron; and inclusion groups or clusters shall not exceed 5 microns in length; (C) products having one side coated with a nickel–iron-diffused layer which is less than 1 micrometer in thickness and the other side coated with a three–layer coating composed of a base nickel–iron-diffused coating layer, with a middle coating layer of annealed and softened pure nickel and a surface coating layer of hard, luster–agent-added nickel which is not heat–treated; with combined coating thickness for all three layers of more than 2 micrometers; surface roughness (RA–microns) 0.18 or less; with SEM not revealing oxides greater than 1 micron; and inclusion groups or clusters shall not exceed 5 microns in length; or (D) products having one side coated with a nickel–iron-diffused layer which is less than 1 micrometer in thickness and the other side coated with a three–layer coating composed of a base nickel–iron-diffused coating layer, with a middle coating layer of annealed and softened pure nickel and a surface coating layer of hard, pure nickel which is not heat–treated; with combined coating thickness for all three layers of more than 2 micrometers; surface roughness (RA–microns) 0.18 or less; SEM not revealing oxides greater than 1 micron; and inclusion groups or clusters shall not exceed 5 microns in length. *See Certain Corrosion–Resistant Carbon Steel Flat Products From Japan: Notice of Final Results of Changed Circumstances Review, and Revocation in Part of Antidumping Duty Order*, 68 FR 19970 (April 23, 2003).

Also excluded from the scope of this order is merchandise meeting the following specifications: (1) Base metal: Aluminum Killed, Continuous Cast,

Carbon Steel SAE 1008, (2) Chemical Composition: Carbon 0.08% max. Silicon, 0.03% max., Manganese 0.40% max., Phosphorus, 0.02% max., Sulfur 0.02% max., (3) Nominal thickness of 0.054 mm, (4) Thickness Tolerance minimum 0.0513 mm, maximum 0.0567 mm, (5) Width of 600 mm or greater, and (7) Nickel plate min. 2.45 microns per side. *See Notice of Final Results of Changed Circumstances Review and Revocation, in Part: Certain Corrosion–Resistant Carbon Steel Flat Products From Japan*, 70 FR 2608 (January 14, 2005).

Also excluded from the scope of this order are the following 24 separate corrosion–resistant carbon steel coil products meeting the following specifications:

Product 1 Products described in industry usage as of carbon steel, measuring 1.625 mm to 1.655 mm in thickness and 19.3 mm to 19.7 mm in width, consisting of carbon steel coil (SAE 1010) with a lining clad with an aluminum alloy containing by weight 10% or more but not more than 15% of tin, 1% or more but not more than 3% of lead, 0.7% or more but not more than 1.3% of copper, 1.8% or more but not more than 3.5% of silicon, 0.1% or more but not more than 0.7% of chromium and less than or equal to 1% of other materials, and meeting the requirements of SAE standard 788 for Bearing and Bushing Alloys.

Product 2 Products described in industry usage as of carbon steel, measuring 0.955 mm to 0.985 mm in thickness and 8.6 mm to 9.0 mm in width, consisting of carbon steel coil (SAE 1012) clad with a two–layer lining, the first layer consisting of a copper–lead alloy powder that contains by weight 9% or more but not more than 11% of tin, 9% or more but not more than 11% of lead, less than 0.05% phosphorus, less than 0.35% iron and less than or equal to 1% other materials, and meeting the requirements of SAE standard 797 for Bearing and Bushing Alloys, with the second layer containing by weight 13% or more but not more than 17% of carbon, 13% or more but not more than 17% of aromatic polyester, and the remainder (approx. 66–74%) of PTFE.

Product 3 Products described in industry usage as of carbon steel, measuring 1.01 mm to 1.03 mm in thickness and 10.5 mm to 10.9 mm in width, consisting of carbon steel coil (SAE 1010) with a two–layer lining, the first layer consisting of a copper–lead alloy powder that contains by weight 9% or more but not more than 11% of tin, 9% or more but not more than 11% of lead, less than 1% zinc and less than or equal to 1% other materials, and meeting the requirements of SAE standard 797 for Bearing and Bushing Alloys, with the second layer containing by weight 45% or more but not more than 55% of lead, 3% or more but not more than 5% of molybdenum disulfide, and the remainder made up of PTFE (approximately 38% to 52%) and less than 2% in the aggregate of other materials.

Product 4 Products described in industry usage as of carbon steel, measuring 1.8 mm to 1.88 mm in thickness and 43.4 mm to 43.8 mm or 16.1 mm to 1.65 mm in width, consisting of carbon steel coil (SAE 1010) clad with an aluminum alloy that contains by weight 19% to 20% tin, 1% to 1.2% copper, less than 0.3% silicon, 0.15% nickel and less than 1% in the aggregate other materials and meeting the requirements of SAE standard 783 for Bearing and Bushing Alloys.

Product 5 Products described in industry usage as of carbon steel, measuring 0.95 mm to 0.98 mm in thickness and 19.95 mm to 20 mm in width, consisting of carbon steel coil (SAE 1010) with a two–layer lining, the first layer consisting of a copper–lead alloy powder that contains by weight 9% or more but not more than 11% of tin, 9% or more but not more than 11% of lead, less than 1% of zinc and less than or equal to 1% in the aggregate of other materials and meeting the requirements of SAE standard 797 for Bearing and Bushing Alloys, with the second layer consisting by weight of 45% or more but not more than 55% of lead, 3% or more but not more than 5% of molybdenum disulfide and with the remainder made up of PTFE (approximately 38% to 52%) and up to 2% in the aggregate of other materials.

Product 6 Products described in industry usage as of carbon steel, measuring 0.96 mm to 0.98 mm in thickness and 18.75 mm to 18.95 mm in width; base of SAE 1010 steel with a two–layer lining, the first layer consisting of copper–base alloy powder with chemical composition (percent by weight): tin 9 to 11, lead 9 to 11, phosphorus less than 0.05, ferrous group less than 0.35, and other materials less than 1%; meeting the requirements of SAE standard 797 for bearing and bushing alloys; the second layer consisting of lead 33 to 37%, aromatic polyester 28 to 32%, and other materials less than 2% with a balance of PTFE.

Product 7 Products described in industry usage as of carbon steel, measuring 1.21 mm to 1.25 mm in thickness and 19.4 mm to 19.6 mm in width; base of SAE 1012 steel with lining of copper base alloy with chemical composition (percent by weight): tin 9 to 11, lead 9 to 11, phosphorus less than 0.05, ferrous group less than 0.35 and other materials less than 1%; meeting the requirements of SAE standard 797 for bearing and bushing alloys.

Product 8 Products described in industry usage as of carbon steel, measuring 0.96 mm to 0.98 mm in thickness and 21.5 mm to 21.7 mm in width; base of SAE 1010 steel with a two–layer lining, the first layer consisting of copper–base alloy powder with chemical composition (percent by weight): tin 9 to 11, lead 9 to 11, phosphorus less than 0.05%, ferrous group less than 0.35 and other materials less than 1; meeting the requirements of SAE standard 797 for bearing and bushing alloys; the second layer consisting of (percent by weight) lead 33 to 37, aromatic polyester 28 to 32 and other materials less than 2 with a balance of PTFE.

Product 9 Products described in industry usage as of carbon steel, measuring 0.96 mm to 0.99 mm in thickness and 7.65 mm to 7.85 mm in width; base of SAE 1012 steel with a two–layer lining, the first layer consisting of copper–based alloy powder with chemical composition (percent by weight): tin 9 to 11, lead 9 to 11, phosphorus less than 0.05, ferrous group less than 0.35 and other materials less than 1; meeting the requirements of SAE standard 797 for bearing and bushing alloys; the second layer consisting of (percent by weight) carbon 13 to 17 and aromatic polyester 13 to 17, with a balance of polytetrafluoroethylene (''PTFE'')

Product 10 Products described in industry usage as of carbon steel, measuring 0.955 mm to 0.985 mm in thickness and 13.6 mm to 14 mm in width; base of SAE 1012 steel with a two–layer lining, the first layer consisting of copper–based alloy powder with chemical composition (percent by weight): tin 9 to 11, lead 9 to 11, phosphorus less than 0.05, ferrous group less than 0.35 and other materials less than 1; meeting the requirements of SAE standard 797 for bearing and bushing alloys; the second layer consisting of (percent by weight) carbon 13 to 17, aromatic polyester 13 to 17, with a balance (approximately 66 to 74) of PTFE.

Product 11 Products described in industry usage as of carbon steel, measuring 1.2 mm to 1.24 mm in thickness; 20 mm to 20.4 mm in width; consisting of carbon steel coils (SAE 1012) with a lining of sintered phosphorus bronze alloy with chemical composition (percent by weight): tin 5.5

to 7; phosphorus 0.03 to 0.35; lead less than 1 and other non–copper materials less than 1.

Product 12 Products described in industry usage as of carbon steel, measuring 1.8 mm to 1.88 mm in thickness and 43.3 mm to 43.7 mm in width; base of SAE 1010 steel with a lining of aluminum based alloy with chemical composition (percent by weight: tin 10 to 15, lead 1 to 3, copper 0.7 to 1.3, silicon 1.8 to 3.5, chromium 0.1 to 0.7 and other materials less than 1; meeting the requirements of SAE standard 788 for bearing and bushing alloys.

Product 13 Products described in industry usage as of carbon steel, measuring 1.8 mm to 1.88 mm in thickness and 24.2 mm to 24.6 mm in width; base of SAE 1010 steel with a lining of aluminum alloy with chemical composition (percent by weight): tin 10 to 15, lead 1 to 3, copper 0.7 to 1.3, silicon 1.8 to 3.5, chromium 0.1 to 0.7 and other materials less than 1; meeting the requirements of SAE standard 788 for bearing and bushing alloys.

Product 14 Flat–rolled coated SAE 1009 steel in coils, with thickness not less than 0.915 mm but not over 0.965 mm, width not less than 19.75 mm or more but not over 20.35 mm; with a two–layer coating; the first layer consisting of tin 9 to 11%, lead 9 to 11%, zinc less than 1%, other materials (other than copper) not over 1% and balance copper; the second layer consisting of lead 45 to 55%, molybdenum disulfide (MoS2) 3 to 5%, other materials not over 2%, balance PTFE.

Product 15 Flat–rolled coated SAE 1009 steel in coils with thickness not less than 0.915 mm or more but not over 0.965 mm; width not less than 18.65 mm or more but not over19.25 mm; with a two–layer coating; the first layer consisting of tin 9 to 11%, lead 9 to 11%, zinc less than 1%, other materials (other than copper) not over 1%, balance copper; the second layer consisting of lead 33 to 37%, aromatic polyester 13 to 17%, other materials other than PTFE less than 2%, balance PTFE.

Product 16 Flat–rolled coated SAE 1009 steel in coils with thickness not less than 0.920 mm or more but not over 0.970 mm; width not less than 21.35 mm or more but not over 21.95 mm; with a two–layer coating; the first layer consisting of tin 9 to 11%, lead 9 to 11%, zinc less than 1%, other materials (other than copper) not over 1%, balance copper; the second layer consisting of lead 33 to 37%, aromatic polyester 13 to 17%, other materials (other than PTFE) less than 2%, balance PTFE.

Product 17 Flat–rolled coated SAE 1009 steel in coils with thickness not less than 1.80 mm or more but not over 1.85 mm, width not less than 14.7 mm or more but not over 15.3 mm; with a lining consisting of tin 2.5 to 4.5%, lead 21.0 to 25.0%, zinc less than 3%, iron less than 0.35%, other materials (other than copper) less than 1%, balance copper.

Product 18 Flat–rolled coated SAE 1009 steel in coils with thickness 1.59 mm or more but not over 1.64 mm; width 14.5 mm or more but not over 15.1 mm; with a lining consisting of tin 2.3 to 4.2%, lead 20 to 25%, iron 1.5 to 4.5%, phosphorus 0.2 to 2.0%, other materials (other than copper) less than 1%, balance copper.

Product 19 Flat–rolled coated SAE 1009 steel in coils with thickness not less than 1.75 mm or more but not over 1.8 mm; width not less than 18.0 mm or more but not over 18.6 mm; with a lining consisting of tin 2.3 to 4.2%, lead 20 to 25%, iron 1.5 to 4.5%, phosphorus 0.2 to 2.0%, other materials (other than copper) less than 1%, balance copper.

Product 20 Flat–rolled coated SAE 1009 steel in coils with thickness 1.59 mm or more but not over 1.64 mm; width 13.6 mm or more but not over14.2 mm; with a lining consisting of tin 2.3 to 4.2%, lead 20 to 25%, iron 1.5 to 4.5%, phosphorus 0.2 to 2.0%, other materials (other than copper) less than 1%, with a balance copper.

Product 21 Flat–rolled coated SAE 1009 steel in coils with thickness 1.59 mm or more but not over 1.64 mm; width 11.5 mm or more but not over 12.1 mm; with a lining consisting of tin 2.3 to 4.2%, lead 20 to 25%, iron 1.5 to 4.5%, phosphorus 0.2 to 2.0%, other materials (other than copper) less than 1%, balance copper.

Product 22 Flat–rolled coated SAE 1009 steel in coils with thickness 1.59 mm or more but not over 1.64 mm; width 11.2 mm or more but not over 11.8 mm, with a lining consisting of copper 0.7 to 1.3%, tin 17.5 to 22.5%, silicon less than 0.3%, nickel less than 0.15%, other materials less than 1%, balance aluminum.

Product 23 Flat–rolled coated SAE 1009 steel in coils with thickness 1.59 mm or more but not over1.64 mm; width 7.2 mm or more but not over 7.8 mm; with a lining consisting of copper 0.7 to 1.3%, tin 17.5 to 22.5%, silicon less than 0.3%, nickel less than 0.15%, other materials (other than copper) less than 1%, balance copper.

Product 24 Flat–rolled coated SAE 1009 steel in coils with thickness 1.72 mm or more but not over 1.77 mm; width 7.7 mm or more but not over 8.3 mm; with a lining consisting of copper 0.7 to 1.3%, tin 17.5 to 22.5%, silicon less than 0.3%, nickel less than 0.15%, other materials (other than copper) less than 1%, balance copper. *See Notice of Final Results of Antidumping Duty Changed Circumstances Review and Revocation, In Part: Certain Corrosion–Resistant Carbon Steel Flat Products From Japan*, 70 FR 5137 (February 1, 2005).

Final Results of Changed Circumstances Review

Given that we received no comments from interested parties on the Preliminary Results, and for the reasons stated in the Preliminary Results, we find that there is interest by the domestic industry in maintaining the order. Therefore, the Department is not revoking the order on certain corrosion–resistant carbon steel flat products from Japan with respect to the product which meets the specifications detailed above, in accordance with sections 751(b) and (d) of the Act and 19 CFR 351.222(g)(1)(I).

This notice also serves as a reminder to parties subject to administrative protective orders (''APO''s) of their responsibility concerning the disposition of proprietary information disclosed under APO in accordance with 19 CFR 351.306. Timely written notification of the return/destruction of APO materials or conversion to judicial protective order is hereby requested. Failure to comply with the regulations and terms of an APO is a sanctionable violation.

This determination is issued and published in accordance with sections 751(b)(1) and 777(I)(1) of the Act and section 19 CFR 351.216 of the Department's regulations.

Dated: August 4, 2005.

Joseph A. Spetrini,

Acting Assistant Secretary for Import Administration.

[FR Doc. E5–4408 Filed 8–12–05; 8:45 am]

BILLING CODE 3510–DS–S

DEPARTMENT OF COMMERCE

National Oceanic and Atmospheric Administration

[I.D. 040505A]

Small Takes of Marine Mammals Incidental to Specified Activities; Marine Geophysical Survey Across the Arctic Ocean

AGENCY: National Marine Fisheries Service (NMFS), National Oceanic and Atmospheric Administration (NOAA), Commerce.

ACTION: Notice; issuance of incidental harassment authorization.

SUMMARY: In accordance with the provisions of the Marine Mammal Protection Act (MMPA) as amended, notification is hereby given that NMFS has issued an Incidental Harassment Authorization (IHA) to the University of Alaska, Fairbanks (UAF) to take marine mammals by Level B harassment incidental to conducting a marine seismic survey across the Arctic Ocean from northern Alaska to Svalbard.

DATES: Effective from August 5, 2005, through August 4, 2006

ADDRESSES: A copy of the IHA and the application are available by writing to Steve Leathery, Chief, Permits, Conservation, and Education Division, Office of Protected Resources, National Marine Fisheries Service, 1315 East-West Highway, Silver Spring, MD 20910–3225, or by telephoning the contact listed here. A copy of the application containing a list of references used in this document may be obtained by writing to this address, by telephoning the contact listed here (see **FOR FURTHER INFORMATION CONTACT**) or online at: *http://www.nmfs.noaa.gov/prot__res/PR2/Small__Take/smalltake__info.htmapplications*. Documents cited in this notice may be viewed, by appointment, during regular business hours, at the aforementioned address.

FOR FURTHER INFORMATION CONTACT: Jolie Harrison, Office of Protected Resources, NMFS, (301) 713–2289, ext 166.

SUPPLEMENTARY INFORMATION:

Background

Sections 101(a)(5)(A) and (D) of the MMPA (16 U.S.C. 1361 *et seq.*) direct the Secretary of Commerce to allow, upon request, the incidental, but not intentional taking of small numbers of marine mammals by U.S. citizens who engage in a specified activity (other than commercial fishing) within a specified geographical region if certain findings are made and either regulations are issued or, if the taking is limited to harassment, notice of a proposed authorization is provided to the public for review.

Authorization for incidental takings may be granted if NMFS finds that the taking will have no more than a negligible impact on the species or stock(s), will not have an unmitigable adverse impact on the availability of the species or stock(s) for subsistence uses, and that the permissible methods of taking and requirements pertaining to the monitoring and reporting of such taking are set forth.

NMFS has defined ''negligible impact'' in 50 CFR 216.103 as:

> an impact resulting from the specified activity that cannot be reasonably expected to, and is not reasonably likely to, adversely affect the species or stock through effects on annual rates of recruitment or survival.

Subsection 101(a)(5)(D) of the MMPA established an expedited process by which citizens of the United States can apply for an authorization to incidentally take small numbers of marine mammals by harassment. Except for certain categories of activities not pertinent here, the MMPA defines ''harassment'' as:

> any act of pursuit, torment, or annoyance which (i) has the potential to injure a marine mammal or marine mammal stock in the wild [''Level A harassment'']; or (ii) has the potential to disturb a marine mammal or marine mammal stock in the wild by causing disruption of behavioral patterns, including, but not limited to, migration, breathing, nursing, breeding, feeding, or sheltering [''Level B harassment''].

Section 101(a)(5)(D) establishes a 45–day time limit for NMFS review of an application followed by a 30–day public notice and comment period on any proposed authorization for the incidental harassment of small numbers of marine mammals. Within 45 days of the close of the comment period, NMFS must either issue or deny issuance of the authorization.

Summary of Request

On March 30, 2005, NMFS received an application from UAF for the taking, by harassment, of several species of marine mammals incidental to conducting, with research funding from the National Science Foundation (NSF) and the Norwegian Petroleum Directorate (NPD), a marine seismic survey across the Arctic Ocean from northern Alaska to Svalbard during the period 5 August to 30 September 2005. The purpose of the proposed seismic study is to collect seismic reflection and refraction data that reveal the structure and stratigraphy of the upper crust of the Arctic Ocean. These data will assist in the determination of the history of ridges and plateaus that subdivide the Amerasian basin in the Arctic Ocean. Past studies have mapped the bottom of the Arctic Ocean, but data are needed to describe the boundaries and connections between the ridges and plateaus in the Amerasian basin and to study the stratigraphy of the smaller basins. This information will assist in preparing for future scientific drilling that is crucial to reconstructing the tectonic, magmatic, and paleoclimatic history of the Amerasian basin.

Subsequent to the **Federal Register** notice announcing NMFS' receipt of UAF's application (70 FR 24539, May 10, 2005), minor changes were made to the proposed action. These changes are documented in detail in the NMFS administrative record, are included in the Specified Activities below, and are summarized here: (1) the seismic survey will commence more than 125 mi (201 km) northwest of the coast of Barrow, instead of approximately 25 mi (40 km) off the coast of Barrow, AK, which means that none of the survey will be conducted in waters less than 100–meters deep, and (2) UAF has added a passive acoustic monitoring component to the project (to gather additional information, not as part of mitigation implementation), wherein marine mammal observers (MMOs) will be able to listen to, and visually analyze, marine mammal signals received by sonobuoys deployed every four hours. As a result of the seismic survey track amendments, adverse impacts to all species addressed in the EA will be equal to or less than those predicted in the original EA, with the possible exception of walruses. In summer, potential walrus numbers along the new track are very difficult to predict because they are distributed patchily, depending on the ice pack distribution, which is very unpredictable. Regardless of numbers, though, if the ship encounters walruses, it will implement the same mitigation measures to avoid take as for other marine mammals and suspend seismic operations until the vessel has traveled well past the animals.

Description of the Activity

The geophysical survey will involve the United States Coast Guard (USCG) cutter *Healy*. The Healy will rendezvous with the Swedish icebreaker *Oden* near Alpha Ridge. The *Oden* will be working on a separate project, conducting an oceanographic section across the Arctic Ocean basin and will coordinate its timing to meet the *Healy*. The *Oden* will cut a path through the ice as necessary, leading the *Healy* for the remainder of the trans-ocean track past the North Pole and then on towards Svalbard. The two icebreakers working in tandem will optimize seismic data collection and safety through the heaviest multi-year ice.

The source vessel, the USCG icebreaker *Healy*, will use a portable Multi-Channel Seismic (MCS) system from the University of Bergen to conduct the seismic survey. The *Healy* will tow two different airgun configurations. The primary energy source will be two Generator guns (G. guns), each with a discharge volume of 250 in^3 for a total volume of 500 in^3. The secondary energy source will be a

single Bolt airgun of 1200 in^3 that will be used for deeper penetration over three ridges (the Alpha, Mendeleev, and Gakkel ridges).

The *Healy* will also tow a hydrophone streamer 100–150 m (328–492 ft) behind the ship, depending on ice conditions. The hydrophone streamer will be up to 300 m (984 ft) long. As the airguns are towed along the survey lines, the receiving system will receive the returning acoustic signals. In addition to the airguns, a multi-beam sonar and sub-bottom profiler will be used during the seismic profiling and continuously when underway.

The program will consist of a total of approximately 4131 km (2230 nautical miles (nm)) of surveys, not including transits when the airguns are not operating, plus scientific coring at nine locations. The seismic survey will commence <200 km (108 nm) off the northwest coast of Barrow, AK, and the seismic activities will be completed northwest of Svalbard, in Norwegian territorial waters. Water depths within the study area are 170 4000 m (66–13123 ft). Approximately 9 percent of the survey will be conducted in water 100 1000–m (328–3280–ft) deep, and most (91 percent) of the survey (approximately 3759 km (1976 nm)) will occur in water <1000–m (3280–ft) deep. Additional seismic operations will be associated with airgun testing, start up, and repeat coverage of any areas where initial data quality is sub-standard.

Along with the airgun operations, additional acoustical systems will be operated during much of, or the entire, cruise. The ocean floor will be mapped with a multi-beam sonar, and a sub-bottom profiler will be used. These two systems are commonly operated simultaneously with an airgun system. An acoustic Doppler current profiler will also be used through the course of the project. A 12–kHz pinger will be used during the sea-bottom coring operations to monitor the depth of the corer relative to the ocean floor. A detailed description of the acoustic sources proposed for use during this survey can be found in the UAF application, which is available at: *http://www.nmfs.noaa.gov/prot__res/PR1/Small__Take/smalltake__info.htm#applications*.

The coring operations constitute a separate project, which will be conducted in conjunction with the seismic study from the *Healy*. Seismic operations will be suspended while the USCG Healy is on site for coring at each of nine locations. Depending on water depth and the number of cores to be collected, the *Healy* may be at each site for between 8 and 36 hours.

Vessel Specifications

The *Healy* has a length of 128 m (420 ft), a beam of 25 m (82 ft), and a full load draft of 8.9 m (29.2 ft). The *Healy* is a USCG icebreaker, capable of traveling at 5.6 km/h (3 knots) through 1.4 m (4.6 ft) of ice. A ''Central Power Plant'', four Sultzer 12Z AU40S diesel generators, provides electric power for propulsion and ship's services through a 60 Hz, 3–phase common bus distribution system. Propulsion power is provided by two electric AC Synchronous, 11.2 MW drive motors, fed from the common bus through a Cycloconverter system, that turn two fixed-pitch, four-bladed propellers. The operation speed during seismic acquisition is expected to be approximately 6.5 km/h (3.5 knots). When not towing seismic survey gear or breaking ice, the *Healy* cruises at 22 km/h (12 knots) and has a maximum speed of 31.5 km/h (17 knots). She has a normal operating range of about 29,650 km (16,000 nm) at 23.2 km/hr (12.5 knots).

The *Healy* will also serve as the platform from which vessel-based marine mammal observers will watch for marine mammals before and during airgun operations. The characteristics of the *Healy* that make it suitable for visual monitoring are described in the monitoring section.

Airgun Description and Safety Radii

The University of Bergen's portable MCS system will be installed on the Healy for this cruise. The Healy will tow either two Sodera 250–in^3 G. guns (for a total discharge volume of 500 in^3) or a single 1200–in3 Bolt airgun, along with a streamer containing hydrophones, along predetermined lines. Seismic pulses will be emitted at intervals of 20 seconds (s) and recorded at a 2 millisecond (ms) sampling rate. The 20 s spacing corresponds to a shot interval of approximately 36 m (118 ft) at the typical cruise speed.

The two-G. gun-cluster configuration will be towed below a depressor bird at a depth between 7 and 20 m (23 and 66 ft), as close to the *Healy*'s stern as possible to minimize ice interference (preferred depth is 8 to 10 m (26 to 29 ft)). The two airguns will be towed 1 m (3.3 ft) apart, separated by a spreader bar. The G. guns have a zero to peak (peak) source output of 236 dB re 1 microPascal-m (6.5 bar-m) and a peak-to-peak (pk-pk) level of 241 dB (11.7 bar-m). The dominant frequency components of these airguns are in the range of 0–150 Hz. For a one-gun source, the nominal source level represents the actual level that would be found about 1 m (3.3 ft) from the airgun. Actual levels experienced by any marine organism more than 1 m (3.3 ft) from the airguns will be significantly lower.

The single Bolt airgun will be towed below a depressor bird at a depth of 10 m (29 ft). This airgun has peak source output of 234 dB re 1 microPascal-m (5 bar-m) and a pk-pk level of 241 dB (11.7 bar-m). The dominant frequency components of these airguns are in the range of 8–40 Hz. Indicated source outputs are for sources at 5 m (16 ft) and for a filter bandwidth of approximately 0–250 Hz.

Received sound levels were modeled by Lamont Doherty Earth Observatory (L-DEO) for single 1200–in^3 Bolt airguns and for the one and two 250–in^3 G. guns in relation to distance and direction from the gun. This publically available model does not allow for bottom interactions, and, thus, is most directly applicable to deep water. For deep water, where most of the present project is to occur, the L-DEO model has been shown to be precautionary, i.e., it tends to overestimate radii for 190, 180, etc., dB re 1 μPa rms (Tolstoy *et al.,* 2004a,b). Based on the models, table 1 shows the distances from the planned sources where sound levels of 190, 180, and 160 dB re 1 microPa root-mean squared (rms) are predicted to be received. The rms pressure is an average over the pulse duration. This is the measure commonly used in studies of marine mammal reactions to airgun sounds, and in NMFS guidelines concerning levels above which ''taking'' might occur. The rms level of a seismic pulse is typically about 10 dB less than its peak level (Greene 1997; McCauley *et al.*, 1998, 2000a).

TABLE 1. ESTIMATED DISTANCES TO WHICH SOUND LEVELS ≥190, 180, AND 160 DB RE 1 MICROPA (RMS) MIGHT BE RECEIVED FROM THE 250–IN³ G. GUN(S) AND 1200–IN³ BOLT AIRGUN THAT WILL BE USED DURING THE SEISMIC SURVEY ACROSS THE ARCTIC OCEAN DURING 2005. THE SOUND RADII USED DURING THE SURVEY WILL DEPEND ON WATER DEPTH (SEE TEXT). DUE TO REVISION IN SURVEY START POINT, NO SURVEYS WILL BE CONDUCTED IN < 100 M. DISTANCES ARE BASED ON MODEL RESULTS PROVIDED BY THE LAMONT-DOHERTY EARTH OBSERVATORY OF COLUMBIA UNIVERSITY.

Seismic Source Volume	Water depth	Estimated Distances at Received Levels (m)		
		190 dB (safety criterion for pinnipeds)	180 dB (safety criterion for cetaceans)	160 dB (assumed onset of behavioral harassment)
250 in³ G. gun	>1000 m	17	52	500
	100–1000 m	26	78	750
	<:100 m	213	385	1364
500 in³ 2 G. guns	>1000 m	100	325	3300
	100–1000 m	150	500	5000
	<100 m	1500	2400	9700
1200 in³ Bolt airgun	>1000 m	25	50	560
	100–1000 m	38	75	840
	<100 m	313	370	1527

For the two-G. gun source, the highest sound level measurable at any location in the water would be slightly less than the nominal source level because the actual source is a distributed source rather than a point source. However, the two guns would be only 1 m (3.3 ft) apart, so the non-point-source effect would be slight. For the single Bolt airgun, the source level represents the actual level that would be found about 1 m from the energy source. Actual levels experienced by any organism more than 1 m (3.3 ft) from either of the sources will be significantly lower.

The rms received levels that are used by NMFS as impact criteria for marine mammals are not directly comparable to the peak or peak-to-peak values normally used to characterize source levels of airguns. The measurement units used to describe airgun sources, i.e., peak or pk-pk decibels, are always higher than the rms decibels referred to in much of the biological literature. A measured received level of 160 decibels rms in the far field would typically correspond to a peak measurement of about 170 to 172 dB, and to a peak-to-peak measurement of about 176 to 178 decibels, as measured for the same pulse received at the same location (Greene 1997; McCauley *et al.* 1998, 2000a). The precise difference between rms and peak or pk-pk values for a given pulse depends on the frequency content and duration of the pulse, among other factors. However, the rms level is always lower than the peak or pk-pk level for an airgun-type source.

The depth at which the sound source is towed has a major impact on the maximum near-field output, and on the shape of its frequency spectrum. In this case, the source is expected to be towed at relatively deep depths of 7 to 20 m (23 to 66 ft).

Empirical data concerning the 190-, 180-, and 160–dB (rms) isopleths in deep and shallow water have been acquired for various airgun configurations based on measurements during the acoustic verification study conducted by L-DEO in the northern Gulf of Mexico from 27 May to 3 June 2003 (Tolstoy *et al.*, 2004a, b). Those data demonstrated that L-DEO's model tends to overestimate the isopleth distances applied in deep water. During that study, empirical data were not obtained for either the 1200–in³ Bolt airgun or the G. guns that will be used during this survey. Although the results were limited, the calibration-study results showed that radii around the airguns where the received level would be 180 dB re 1 microPa (rms), the safety zone radius NMFS uses for cetaceans, (NMFS 2000), vary with water depth. Similar depth-related variation is likely in the 190 dB distances used for pinnipeds. Although sea turtle sightings are highly unlikely, the 180–dB distance will also be used as the safety radius for sea turtles, as required by NMFS in another recent seismic project (Smultea *et al.*, 2005). The safety zones are used to trigger mitigation measures, which are described below.

The L-DEO model does not allow for bottom interactions, and thus is most directly applicable to deep water and to relatively short ranges. In intermediate-depth water a precautionary 1.5x factor will be applied to the values predicted by L-DEO's model. Due to UAF's revision of the survey start In shallow water, larger precautionary factors derived from the empirical shallow-water measurements would be applied, however, no seismic will be conducted in shallow water. The proposed study area will occur mainly in water 1000 to 4000 m (3280 to 13123 ft) deep, with approximately 9 percent of the survey lines in intermediate water depths <100 1000 m (328–3280 ft)), and with no seismic survey lines in shallow (<100 m (328 ft)) water, since the application was revised to start the survey > 200 km (108 nm) off the coast of Barrow, AK.

The empirical data indicate that, for *deep water* (>1000 m (3280 ft)), the L-DEO model tends to overestimate the received sound levels at a given distance (Tolstoy *et al.*, 2004a,b). However, to be precautionary pending acquisition of additional empirical data, UAF has proposed using safety radii during airgun operations in deep water that correspond to the values predicted by L-DEO's model for deep water (Table 1). In deep water, the estimated 190 and 180 dB radii for two 250–in³G. guns are 100 and 325 m (328 and 1067 ft), respectively. Those for one 1200–in³ Bolt airgun are 25 and 50 m (82 and 164 ft), respectively.

Empirical measurements were not conducted for intermediate depths (100 1000 m (328–3280 ft)). On the expectation that results would be somewhere between those from shallow and deep water, UAF has applied a 1.5x correction factor to the estimates provided by the model for deep water situations. This is the same factor that has been applied to the model estimates during L-DEO operations in intermediate-depth water from 2003 through early 2005. The estimated 190– and 180–dB radii in intermediate-depth water are 150 m (490 ft) and 500 m (1640 ft), respectively, for the two G. gun system and 38 and 75 m (125 and 246 ft), respectively, for the single Bolt airgun (Table 1).

Though no seismic exercises will be conducted in shallow water, the explanation for the safety ranges in shallow water is included below because it is cross-referenced elsewhere. Empirical measurements were not made for the sources that will be employed during the proposed survey operating in shallow water (<100 m (328 ft)). The empirical data on operations of two 105 in^3 GI guns in shallow water showed that modeled values underestimated actual levels in shallow water at corresponding distances of 0.5 to 1.5 km (0.3 to 0.5 nm) by a factor of approximately 3x (Tolstoy *et al.*, 2004b). Sound level measurements for the 2 GI guns were not available for distances <0.5 km (0.3 nm) from the source. The radii estimated here for two G. guns operating in shallow water are derived from L-DEO's deep water estimates, with the same adjustments for depth-related differences in sound propagation used for 2 GI guns in earlier applications (and approximately the same factors as used for L-DEO's 10–airgun array). Similarly, the factors for the single airguns are the same as those for a single GI gun in earlier applications. Thus, the estimated 190- and 180–dB radii in shallow water are 1500 and 2400 m (4921 and 7874 ft), respectively, for the two G. guns (Table 1). The corresponding radii for the single G. gun in shallow water are estimated to be 213 and 385 m (699 and 1263 ft), respectively. The sound radii for the single Bolt airgun in shallow water are estimated to be 313 m (1027 ft) for 190 dB and 370 m (1214 ft) for 180 dB.

Characteristics of Airgun Pulses

Discussion of the characteristics of airgun pulses has been provided in the application and in previous **Federal Register** notices (see 69 FR 31792 (June 7, 2004) or 69 FR 34996 (June 23, 2004)). Reviewers are referred to those documents for additional information.

Comments and Responses

A notice of receipt of the UAF application and proposed IHA was published in the **Federal Register** on May 10, 2005 (70 FR 24539). The **Federal Register** notice also invited comments on UAF's associated draft Environmental Assessment (EA), which was posted on the NMFS website. During the comment period, NMFS received comments only from the Marine Mammal Commission (Commission) and one individual.

Comment 1: The Commission notes that the May, 2005 **Federal Register** notice states that monitoring would be conducted by at least one observer and, when practical, two observers, but does not indicate what factors will be used to determine when monitoring by two observers will be considered ''practical.'' The Commisssion recommends that NMFS seek clarification of this point.

Response: There will always be two observers watching for at least 30 minutes before seismic operations begin. Observation coverage during this time period is especially important in order to avoid surprising a marine mammal. Once seismic operations have begun, it is more likely a marine mammal will move to avoid the area within the safety radii. Once operations have begun, the time that two observers are on watch will be maximized within the constraints of four observers, working watches no longer than 4 hours, with 8–hr breaks in each 24–hr period, and needing time to work the data.

Comment 2: In light of the fact that marine mammal detection is especially difficult in the dark, the Commission recommends that NMFS more explicitly define what constitutes daytime and nighttime for purposes of the proposed mitigation measures.

Response: NMFS appreciates the Commissions concerns regarding the detection of marine mammals in the dark. However, whether it is night-time or a foggy day, the Healy's start-up procedures require that seismic operation ramp-up may not begin unless the entire safety radius has been completely visible for at least 30 minutes prior to start-up.

Comment 3: The Commission notes that the use of passive acoustic detection techniques to locate whales and ice seals by their vocalizations prior to start-up of the airguns might increase the efficacy of the monitoring effort and may be a useful additional mitigation measure that should be implemented. They further suggest that NMFS consult with the applicant about the possibility of establishing a one-half hour listening period prior to start-up of the airguns for this purpose.

Response: In response to a request and subsequent discussion at the Anchorage MMPA Peer-review meeting in May, 2005, UAF has added a passive acoustic monitoring component (described in the Monitoring section below), which will utilize data collected by the sonobuoys that are deployed from the *Healy* every 4 hours. The plan is for one MMO to listen to the sound being received by the closest sonobuoy for 10 minutes out of every 30 they are monitoring, which will include time prior to ramp up of seismic operations. The added passive acoustic monitoring with sonobuoys, though it will allow marine mammal observers (MMOs) to identify the presence of marine mammals in a region in which visual observations are restricted by ice and poor visibility, will not be used directly to implement mitigation measures (i.e. to necessitate a shut-down) because the direction and exact distance from which the signals are coming cannot be determined. However, any information gathered could help to fill a data gap about the habitats marine mammals occupy in the very high Arctic latitudes.

Comment 4: The Commission states concerns about whether the proposed monitoring effort will be sufficient to determine that no marine mammal, especially species that may be difficult to detect, are within the safety zones (190 dB for pinnipeds, 180 dB for cetaceans) at start up or will be an effective means of detecting when marine mammals enter the safety zones during operations.

Response: For this activity, the safety radii range from 17 to 78 m (56 to 256 ft) in deep water (91 percent of survey), to 100 to 500 m (328 to1640 ft) in intermediate depth water (9 percent of survey). Considering the small size of the conservative shutdown zones, the speed of the vessel when towing the airgun (6.5 km/h (3.5 knots)), and the marine mammal avoidance measures that are implemented on the vessel for animals on the vessel's track, it is very unlikely that any marine mammals would enter the safety zone undetected. If a marine mammal enters the small safety zone, operational shutdown will be implemented until the animal leaves the safety zone.

Description of Habitat and Marine Mammals Affected by the Activity

A detailed description of the *Healy*'s revised track from northwest of Barrow, through the Arctic ocean to northwest of

Svalbard and the associated marine mammals can be found in the UAF application (including revisions) and a number of documents referenced in the UAF application. A total of 17 cetacean species and 10 pinniped species may occur in the proposed study area. The marine mammals that occur in the proposed survey area belong to four taxonomic groups: odontocetes (toothed cetaceans, such as dolphins and sperm whales), mysticetes (baleen whales), pinnipeds (seals, sea lions, and walrus), and fissipeds (polar bear).

Odontocete whales include the sperm whale, northern bottlenose whale, beluga whale, narwhal, Atlantic white-beaked dolphin, Atlantic white-sided dolphin, killer whale, long-finned pilot whale, and harbor porpoise.

Mysticete whales include the North Atlantic right whale, bowhead whale, gray whale, humpback whale, minke whale, sei whale, fin whale, and blue whale.

Pinnipeds include the walrus, bearded seal, harbor seal, spotted seal, ringed seal, hooded seal, and harp seal.

The marine mammal species most likely to be encountered include four cetacean species (beluga whale, narwhal, gray whale, bowhead whale), five pinniped species (walrus, bearded seal, ringed seal, hooded seal, harp seal), and the polar bear. However, most of these will occur in low numbers and are most likely to be encountered within 100 km (54 nm) of shore. The most abundant marine mammal likely to be encountered throughout the cruise is the ringed seal. The most widely distributed marine mammals are expected to be the beluga, ringed seal, and polar bear.

About 13 additional cetacean species could occur in the project area, but are unlikely to be encountered along the proposed trackline. If encountered at all, those species would be found only near one end of the track, either near Svalbard or near Alaska. The following 12 species, if encountered at all, would be found close to Svalbard: sperm whale, northern bottlenose whale, long-finned pilot whale, Atlantic white-sided dolphin, Atlantic white-beaked dolphin, harbor porpoise, killer whale, North Atlantic right whale, humpback whale, minke whale, sei whale, fin whale, and blue whale. Two additional pinniped species, the harbor seal and spotted seal, are also unlikely to be encountered.

Although information on the walrus and polar bear are included here, they are managed by the U.S. Fish & Wildlife Service (USFWS) and are not the subject of this authorization. UAF will coordinate with the USFWS regarding the effects of project operations on walruses and polar bears.

More detailed information on these species is contained in the UAF application (see **ADDRESSES**).

Potential Effects of Activities on Marine Mammals

The effects of noise on marine mammals are highly variable, and can be categorized as follows (based on Richardson *et al.*, 1995):

(1) The noise may be too weak to be heard at the location of the animal (i.e., lower than the prevailing ambient noise level, the hearing threshold of the animal at relevant frequencies, or both);

(2) The noise may be audible but not strong enough to elicit any overt behavioral response;

(3) The noise may elicit reactions of variable conspicuousness and variable relevance to the well being of the marine mammal; these can range from temporary alert responses to active avoidance reactions such as vacating an area at least until the noise event ceases;

(4) Upon repeated exposure, a marine mammal may exhibit diminishing responsiveness (habituation), or disturbance effects may persist; the latter is most likely with sounds that are highly variable in characteristics, infrequent and unpredictable in occurrence, and associated with situations that a marine mammal perceives as a threat;

(5) Any anthropogenic noise that is strong enough to be heard has the potential to reduce (mask) the ability of a marine mammal to hear natural sounds at similar frequencies, including calls from conspecifics, and underwater environmental sounds such as surf noise;

(6) If mammals remain in an area because it is important for feeding, breeding or some other biologically important purpose even though there is chronic exposure to noise, it is possible that there could be noise-induced physiological stress; this might in turn have negative effects on the well-being or reproduction of the animals involved; and

(7) Very strong sounds have the potential to cause temporary or permanent reduction in hearing sensitivity. In terrestrial mammals, and presumably marine mammals, received sound levels must far exceed the animal's hearing threshold for there to be any temporary threshold shift (TTS) in its hearing ability. For transient sounds, the sound level necessary to cause TTS is inversely related to the duration of the sound. Received sound levels must be even higher for there to be risk of permanent hearing impairment. In addition, intense acoustic or explosive events may cause trauma to tissues associated with organs vital for hearing, sound production, respiration and other functions. This trauma may include minor to severe hemorrhage.

Effects of Seismic Surveys on Marine Mammals

The UAF application provides the following information on what is known about the effects on marine mammals of the types of seismic operations planned by UAF. The types of effects considered in here are (1) tolerance, (2) masking of natural sounds, (3) behavioral disturbance, and (4) potential hearing impairment and other non-auditory physical effects (Richardson *et al.*, 1995). Because the airgun sources planned for use during the present project involve only one or two airguns, the effects are anticipated to be considerably less than would be the case with a large array. UAF and NMFS believe it is very unlikely that there would be any cases of temporary or permanent hearing impairment, or non-auditory physical effects. Also, behavioral disturbance is expected to be limited to animals that are near the vessel at distances less than 3300 m (10827 ft) in deep water (91 percent of survey) and less than 5000 m (16404 ft) in intermediate water depths, where the received sound levels greater than160 dB are expected to be. This corresponds to the value NMFS uses for onset of Level B harassment due to impulse sounds. Additional discussion on effects on marine mammal species can be found in the UAF application.

Tolerance

Numerous studies (referenced in L-DEO, 2004) have shown that pulsed sounds from airguns are often readily detectable in the water at distances of many kilometers, but that marine mammals at distances more than a few kilometers from operating seismic vessels often show no apparent response. That is often true even in cases when the pulsed sounds must be readily audible to the animals based on measured received levels and the hearing sensitivity of that mammal group. However, most measurements of airgun sounds that have been reported concerned sounds from larger arrays of airguns, whose sounds would be detectable farther away than the ones that are planned to be used in the proposed survey. Although various baleen whales, toothed whales, and pinnipeds have been shown to react behaviorally to airgun pulses under some conditions, at other times all three types of mammals have shown no overt reactions. In general, pinnipeds and

small odontocetes seem to be more tolerant of exposure to airgun pulses than are baleen whales. Given the low-energy airgun sources planned for use in this proposed project, marine mammals would be expected to tolerate being closer to these sources than would be the case for a larger airgun source typical of most seismic surveys.

Masking

Masking effects of pulsed sounds (even from large arrays of airguns) on marine mammal vocalizations and other natural sounds are expected to be limited, although there are very few specific data of relevance. Some whales are known to continue calling in the presence of seismic pulses. Their calls can be heard between the seismic pulses (e.g., Richardson *et al.*, 1986; McDonald *et al.*, 1995; Greene *et al.*, 1999; Nieukirk *et al.*, 2004). Although there has been one report that sperm whales cease calling when exposed to pulses from a very distant seismic ship (Bowles *et al.*, 1994), a more recent study reports that sperm whales off northern Norway continued calling in the presence of seismic pulses (*Madsen et al.*, 2002). That behavior has also been shown during recent work in the Gulf of Mexico (Tyack *et al.*, 2003). Given that the airgun sources planned for use here involve only 1 or 2 airguns, there is even less potential for masking of baleen or sperm whale calls during the present study than in most seismic surveys. Masking effects of seismic pulses are expected to be negligible in the case of the odontocete cetaceans, given the intermittent nature of seismic pulses and the relatively low source level of the airgun configurations to be used here. Also, the sounds important to odontocetes are predominantly at much higher frequencies than are airgun sounds and would not be masked by the airguns.

Most of the energy in the sound pulses emitted by airguns is at low frequencies, with strongest spectrum levels below 200 Hz and considerably lower spectrum levels above 1000 Hz. These low frequencies are mainly used by mysticetes, but generally not by odontocetes or pinnipeds. An industrial sound source will reduce the effective communication or echolocation distance only if its frequency is close to that of the marine mammal's signal. If little or no overlap occurs between the frequencies of the industrial noise and the marine mammals, as in the case of many marine mammals relative to airgun sounds, communication and echolocation are not expected to be disrupted. Furthermore, the discontinuous nature of seismic pulses makes significant masking effects unlikely even for mysticetes.

A few cetaceans are known to increase the source levels of their calls in the presence of elevated sound levels, or possibly to shift their peak frequencies in response to strong sound signals (Dahlheim, 1987; Au, 1993; Lesage *et al.*, 1999; Terhune, 1999; as reviewed in Richardson *et al.*, 1995). These studies involved exposure to other types of anthropogenic sounds, not seismic pulses, and it is not known whether these types of responses ever occur upon exposure to seismic sounds. If so, these adaptations, along with directional hearing, pre-adaptation to tolerate some masking by natural sounds (Richardson *et al.*, 1995) and the relatively low-power acoustic sources being used in this survey, would all reduce the possible adverse impacts of masking marine mammal vocalizations.

Behavioral Disturbance by Seismic Surveys

Disturbance includes a variety of effects, including subtle changes in behavior, more conspicuous changes in activities, and displacement. Not all behavioral disturbances rise to the level of Level B Harassment, which requires a disruption of behavioral patterns of biological importance. Exposure to sound alone may not constitute harassment or ''taking'' (NMFS 2001, p. 9293). Behavioral reactions of marine mammals to sound are difficult to predict. Reactions to sound, if any, depend on species, individual variation, state of maturity, experience, current activity, reproductive state, time of day, season, and many other factors. If a marine mammal does react to an underwater sound by changing its behavior or moving a small distance, the impacts of the change may not rise to the level of a disruption of a behavioral pattern. However, if a sound source would displace a marine mammal from an important feeding or breeding area, such a disturbance may constitute Level B harassment under the MMPA. In addition, effects that might not constitute Level B harassment may still result in spatial displacement of sensitive species, such as bowhead whales, thereby affecting subsistence needs. Given the many uncertainties in predicting the quantity and types of impacts of noise on marine mammals, NMFS estimates the number of marine mammals that may be present within a particular distance of industrial activities or exposed to a particular level of industrial sound and uses these numbers as a proxy. With the possible exception of beaked whales, NMFS believes that this is a conservative approach and likely overestimates the numbers of marine mammals that may experience a disruption of a behavioral pattern.

The sound exposure criteria used to estimate how many marine mammals might be harassed behaviorally by the seismic survey are based on behavioral observations during studies of several species. However, information is lacking for many other species. Detailed studies have been conducted on humpback, gray, and bowhead whales, and on ringed seals. Less detailed data are available for some other species of baleen whales, sperm whales, small toothed whales, and sea otters. Most of those studies have been on behavioral reactions to much larger airgun sources than the airgun configurations planned for use in the present project. Thus, effects are expected to be limited to considerably smaller distances and shorter periods of exposure in the present project than in most of the previous work concerning marine mammal reactions to airguns. Detailed information on potential disturbance effects on baleen whales, toothed whales, and pinnipeds can be found in the UAF application.

Hearing Impairment and Other Physical Effects

Temporary or permanent hearing impairment is a possibility when marine mammals are exposed to very strong sounds, but there has been no specific documentation of this for marine mammals exposed to airgun pulses. Based on current information, NMFS precautionarily sets impulsive sounds equal to or greater than 180 and 190 dB re 1 microPa (rms) as the exposure thresholds for onset of Level A harassment (injury) for cetaceans and pinnipeds, respectively (NMFS, 2000). Those criteria have been used for several years in setting the safety (shut-down) radii for seismic surveys. As discussed in the UAF application and summarized here,

1. The 180–dB criterion for cetaceans is probably quite precautionary, i.e., lower than necessary to avoid TTS let alone permanent auditory injury, at least for delphinids.

2. The minimum sound level necessary to cause permanent hearing impairment is higher, by a variable and generally unknown amount, than the level that induces barely-detectable TTS.

3. The level associated with the onset of TTS is often considered to be lower than levels that may cause permanent hearing damage.

Because the airgun sources planned for use during this project involve only

1 or 2 guns, and with the planned monitoring and mitigation measures, there is little likelihood that any marine mammals will be exposed to sounds sufficiently strong to cause even the mildest (and reversible) form of hearing impairment. Several aspects of the planned monitoring and mitigation measures for this project are designed to detect marine mammals occurring near the airgun(s), and multi-beam sonar, and to avoid exposing them to sound pulses that might (at least in theory) cause hearing impairment. In addition, many cetaceans are likely to show some avoidance of the small area with high received levels of airgun sound (see above). In those cases, the avoidance responses of the animals themselves will likely reduce or prevent any possibility of hearing impairment.

Non-auditory physical effects might also occur in marine mammals exposed to strong underwater pulsed sound. Possible types of non-auditory physiological effects or injuries that theoretically might occur in mammals close to a strong sound source include stress, neurological effects, bubble formation, resonance effects, and other types of organ or tissue damage. It is possible that some marine mammal species (i.e., beaked whales) may be especially susceptible to injury and/or stranding when exposed to strong pulsed sounds. However, as discussed below, there is no definitive evidence that any of these effects occur even in marine mammals that are in close proximity to large arrays of airguns. UAF and NMFS believe that it is highly unlikely that any of these non-auditory effects would occur during the proposed survey given the small size of the source, the brief duration of exposure of any given mammal, and the planned mitigation and monitoring measures. The following paragraphs discuss the possibility of TTS, permanent threshold shift (PTS), and non-auditory physical effects.

TTS

TTS is the mildest form of hearing impairment that can occur during exposure to a strong sound (Kryter, 1985). When an animal experiences TTS, its hearing threshold rises and a sound must be stronger in order to be heard. TTS can last from minutes or hours to (in cases of strong TTS) days. Richardson *et al.* (1995) note that the magnitude of TTS depends on the level and duration of noise exposure, among other considerations. For sound exposures at or somewhat above the TTS threshold, hearing sensitivity recovers rapidly after exposure to the noise ends. Little data on pulsed sound levels and durations necessary to elicit mild TTS have been obtained for marine mammals, and none of the published data concern TTS elicited by exposure to multiple pulses of sound.

For toothed whales exposed to single short pulses, the TTS threshold appears to be, at a first approximation, a function of the energy content of the pulse (Finneran *et al.*, 2002). Given the available data, the received level of a single seismic pulse might need to be approximately 210 dB re 1 microPa rms (approx. 221 226 dB pk pk) in order to produce brief, mild TTS. Exposure to several seismic pulses at received levels near 200 205 dB (rms) might result in slight TTS in a small odontocete, assuming the TTS threshold is at a function of the total received pulse energy (Finneran *et al.*, 2002). Seismic pulses with received levels of 200 205 dB or more are usually restricted to a zone of no more than 100 m (328 ft) around a seismic vessel operating a large array of airguns. Such sound levels would be limited to distances within a few meters of the single airgun planned for use during this project.

There are no data, direct or indirect, on levels or properties of sound that are required to induce TTS in any baleen whale. However, TTS is not expected to occur during this survey given that the airgun sources involve only 1 or 2 airguns, and the strong likelihood that baleen whales would avoid the approaching airgun(s), or vessel, before being exposed to levels high enough for there to be any possibility of TTS.

TTS thresholds for pinnipeds exposed to brief pulses (single or multiple) have not been measured, although exposures up to 183 dB re 1 microPa (rms) have been shown to be insufficient to induce TTS in captive California sea lions (Finneran *et al.*, 2003). However, studies for prolonged exposures show that some pinnipeds may incur TTS at somewhat lower received levels for prolonged exposures than do small odontocetes exposed for similar durations (Kastak *et al.*, 1999; Ketten *et al.*, 2001; Au *et al.*, 2000). More recent indications are that TTS onset in the most sensitive pinniped species studied (harbor seal) may occur at a similar sound exposure level as in odontocetes (Kastak *et al.*, 2004).

A marine mammal within 100 m (≤328 ft) of a typical large array of operating airguns might be exposed to a few seismic pulses with levels of ≥ 205 dB, and possibly more pulses if the mammal moved with the seismic vessel. (As noted above, most cetacean species tend to avoid operating airguns, although not all individuals do so.) However, several of the considerations that are relevant in assessing the impact of typical seismic surveys with arrays of airguns are not directly applicable here:(1) The planned airgun sources involve only 1 or 2 airguns, with correspondingly smaller radii within which received sound levels could exceed any particular level of concern.

(2) ''Ramping up'' (soft start) is standard operational protocol during startup of large airgun arrays in many jurisdictions. Ramping up involves starting the airguns in sequence, usually commencing with a single airgun and gradually adding additional airguns. This practice will be employed when the 2 G. guns are operated.

(3) Even with a large airgun array, it is unlikely that cetaceans would be exposed to airgun pulses at a sufficiently high level for a sufficiently long period to cause more than mild TTS, given the relative movement of the vessel and the marine mammal. In this project, the airgun sources are much less strong, so the area of influence and duration of exposure to strong pulses is much smaller, especially in deep and intermediate-depth water.

(4) With a large array of airguns, TTS would be most likely to occur in any odontocetes that bow-ride or otherwise linger near the airguns. In the present project, the anticipated 180 dB distances in deep and intermediate-depth water are 325 and 500 m (1066 and 1640 ft), respectively, for the 2 G. gun system, and 50 and 75 m (164 and 246 ft), respectively, for the single Bolt airgun (Table 2). The waterline at the bow of the *Healy* will be approximately 123 m (403 ft) ahead of the airgun.

NMFS believes that, to avoid Level A harassment, cetaceans should not be exposed to pulsed underwater noise at received levels exceeding 180 dB re 1 microPa (rms). The corresponding limit for pinnipeds is 190 dB. The predicted 180– and 190–dB distances for the airgun arrays operated by UAF during this activity are summarized in Table 1 in this document.

It has also been shown that most whales tend to avoid ships and associated seismic operations. Thus, whales will likely not be exposed to such high levels of airgun sounds. Because of the slow ship speed, any whales close to the trackline could move away before the sounds become sufficiently strong for there to be any potential for hearing impairment. Therefore, there is little potential for whales being close enough to an array to experience TTS. In addition, ramping up multiple airguns in arrays has become standard operational protocol for many seismic operators and will occur when the 2 G. guns are operated.

PTS

When PTS occurs there is physical damage to the sound receptors in the ear. In some cases there can be total or partial deafness, while in other cases the animal has an impaired ability to hear sounds in specific frequency ranges. Although there is no specific evidence that exposure to pulses of airgun sounds can cause PTS in any marine mammals, even with the largest airgun arrays, physical damage to a mammal's hearing apparatus can potentially occur if it is exposed to sound impulses that have very high peak pressures, especially if they have very short rise times (time required for sound pulse to reach peak pressure from the baseline pressure). Such damage can result in a permanent decrease in functional sensitivity of the hearing system at some or all frequencies.

Single or occasional occurrences of mild TTS are not indicative of permanent auditory damage in terrestrial mammals. However, very prolonged exposure to sound strong enough to elicit TTS, or shorter-term exposure to sound levels well above the TTS threshold, can cause PTS, at least in terrestrial mammals (Kryter, 1985). Relationships between TTS and PTS thresholds have not been studied in marine mammals but are assumed to be similar to those in humans and other terrestrial mammals, based on their similar anatomy and inner ear structures. The low-to-moderate levels of TTS that have been induced in captive odontocetes and pinnipeds during recent controlled studies of TTS have been confirmed to be temporary, with no measurable residual PTS (Kastak *et al.*, 1999; Schlundt *et al.*, 2000; Finneran *et al.*, 2002; Nachtigall *et al.*, 2003). In terrestrial mammals, the received sound level from a single non-impulsive sound exposure must be far above the TTS threshold for any risk of permanent hearing damage (Kryter, 1994; Richardson *et al.*, 1995). For impulse sounds with very rapid rise times (e.g., those associated with explosions or gunfire), a received level not greatly in excess of the TTS threshold may start to elicit PTS. The rise times for airgun pulses are rapid, but less rapid than for explosions.

Some factors that contribute to onset of PTS are as follows: (1) exposure to single very intense noises, (2) repetitive exposure to intense sounds that individually cause TTS but not PTS, and (3) recurrent ear infections or (in captive animals) exposure to certain drugs.

Cavanagh (2000) has reviewed the thresholds used to define TTS and PTS. Based on his review and SACLANT (1998), it is reasonable to assume that PTS might occur at a received sound level 20 dB or more above that which induces mild TTS. However, for PTS to occur at a received level only 20 dB above the TTS threshold, it is probable that the animal would have to be exposed to the strong sound for an extended period.

Sound impulse duration, peak amplitude, rise time, and number of pulses are the main factors thought to determine the onset and extent of PTS. Based on existing data, Ketten (1994) has noted that the criteria for differentiating the sound pressure levels that result in PTS (or TTS) are location and species-specific. PTS effects may also be influenced strongly by the health of the receiver's ear.

Given that marine mammals are unlikely to be exposed to received levels of seismic pulses that could cause TTS, it is highly unlikely that they would sustain permanent hearing impairment. If we assume that the TTS threshold for odontocetes for exposure to a series of seismic pulses may be on the order of 220 dB re 1 microPa (pk-pk) (approximately 204 dB re 1 microPa rms), then the PTS threshold might be about 240 dB re 1 microPa (pk-pk). In the units used by geophysicists, this is 10 bar-m. Such levels are found only in the immediate vicinity of the largest airguns (Richardson *et al.*, 1995; Caldwell and Dragoset, 2000). However, as noted previously in this document, it is very unlikely that an odontocete would remain within a few meters of a large airgun for sufficiently long to incur PTS. The TTS (and thus PTS) thresholds of baleen whales and pinnipeds may be lower, and thus may extend to a somewhat greater distance from the source. However, baleen whales generally avoid the immediate area around operating seismic vessels, so it is unlikely that a baleen whale could incur PTS from exposure to airgun pulses. Some pinnipeds do not show strong avoidance of operating airguns.

In summary, during this project, it is highly unlikely that marine mammals could receive sounds strong enough and over a sufficient period of time to cause permanent hearing impairment. In the proposed project marine mammals are unlikely to be exposed to received levels of seismic pulses strong enough to cause TTS, and because of the higher level of sound necessary to cause PTS, it is even less likely that PTS could occur. This is due to the fact that even levels immediately adjacent to the single G. gun may not be sufficient to induce PTS because the mammal would not be exposed to more than one strong pulse unless it swam alongside an airgun for a period of time.

Strandings and Mortality

Marine mammals close to underwater detonations of high explosives can be killed or severely injured, and the auditory organs are especially susceptible to injury (Ketten *et al.*, 1993; Ketten, 1995). Airgun pulses are less energetic and have slower rise times than underwater detonations. While there is no documented evidence that airgun arrays can cause serious injury, death, or stranding, the association of mass strandings of beaked whales with naval exercises and, in one case, an L-DEO seismic survey have raised the possibility that beaked whales may be especially susceptible to injury and/or behavioral reactions that can lead to stranding when exposed to strong pulsed sounds.

It is important to note that seismic pulses and mid-frequency military sonar pulses are quite different. Sounds produced by the types of airgun arrays used to profile sub-sea geological structures are broadband with most of the energy below 1 kHz. Typical military mid-frequency sonars operate at frequencies of 2 to 10 kHz, generally with a relatively narrow bandwidth at any one time (though the center frequency may change over time). Because seismic and sonar sounds have considerably different characteristics and duty cycles, it is not appropriate to assume that there is a direct connection between the effects of military sonar and seismic surveys on marine mammals. However, evidence that sonar pulses can, in special circumstances, lead to hearing damage and, indirectly, mortality suggests that caution is warranted when dealing with exposure of marine mammals to any high-intensity pulsed sound.

In addition to mid-frequency sonar-related strandings (see 69 FR 74906 (December 14, 2004) for additional discussion), there was a September, 2002 stranding of two Cuvier's beaked whales in the Gulf of California (Mexico) when a seismic survey by the *R/V Maurice Ewing* was underway in the general area (Malakoff, 2002). The airgun array in use during that project was the *Ewing*'s 20–gun 8490–in^3 array. This might be a first indication that seismic surveys can have effects, at least on beaked whales, similar to the suspected effects of naval sonars. However, the evidence linking the Gulf of California strandings to the seismic surveys is inconclusive, and is not based on any physical evidence (Hogarth, 2002; Yoder, 2002). The ship was also operating its multi-beam

bathymetric sonar at the same time but this sonar had much less potential to affect beaked whales than either the airguns in use or these naval sonars. Although the link between the Gulf of California strandings and the seismic (plus multi-beam sonar) survey is inconclusive, this event, in addition to the various incidents involving beaked whale strandings associated with naval exercises, suggests a need for caution in conducting seismic surveys in areas occupied by beaked whales.

The present project will involve lower-energy sound sources than used in typical seismic surveys. That, along with the monitoring and mitigation measures that are planned, and the infrequent occurrence of beaked whales in the project area, will minimize any possibility for strandings and mortality.

Non-auditory Physiological Effects

Possible types of non-auditory physiological effects or injuries that might theoretically occur in marine mammals exposed to strong underwater sound include stress, neurological effects, bubble formation, resonance effects, and other types of organ or tissue damage. There is no evidence that any of these effects occur in marine mammals exposed to sound from airgun arrays. However, there have been no direct studies of the potential for airgun pulses to elicit any of these effects. If any such effects do occur, they would probably be limited to unusual situations when animals might be exposed at close range for unusually long periods.

Long-term exposure to anthropogenic noise may have the potential to cause physiological stress that could affect the health of individual animals or their reproductive potential, which could theoretically cause effects at the population level (Gisner (ed.), 1999). However, there is essentially no information about the occurrence of noise-induced stress in marine mammals. Also, it is doubtful that any single marine mammal would be exposed to strong seismic sounds for sufficiently long that significant physiological stress would develop. That is especially so in the case of the present project which will deploy only 1 or 2 airguns, the ship is moving 3 4 knots, and for the most part the tracklines will not ''double back'' through the same area.

Gas-filled structures in marine animals have an inherent fundamental resonance frequency. If stimulated at this frequency, the ensuing resonance could cause damage to the animal. There may also be a possibility that high sound levels could cause bubble formation in the blood of diving mammals that in turn could cause an air embolism, tissue separation, and high, localized pressure in nervous tissue (Gisner (ed), 1999; Houser *et al.*, 2001). In 2002, NMFS held a workshop (Gentry (ed.), 2002) to discuss whether the stranding of beaked whales in the Bahamas in 2000 might have been related to air cavity resonance or bubble formation in tissues caused by exposure to noise from naval sonar. A panel of experts concluded that resonance in air-filled structures was not likely to have caused this stranding. Among other reasons, the air spaces in marine mammals are too large to be susceptible to resonant frequencies emitted by mid- or low-frequency sonar; lung tissue damage has not been observed in any mass, multi-species stranding of beaked whales; and the duration of sonar pings is likely too short to induce vibrations that could damage tissues (Gentry (ed.), 2002).

Opinions were less conclusive about the possible role of gas (nitrogen) bubble formation/growth in the Bahamas stranding of beaked whales. Workshop participants did not rule out the possibility that bubble formation/growth played a role in the stranding and participants acknowledged that more research is needed in this area. The only available information on acoustically-mediated bubble growth in marine mammals is modeling that assumes prolonged exposure to sound.

A short paper concerning beaked whales stranded in the Canary Islands in 2002 suggests that cetaceans might be subject to decompression injury in some situations (Jepson *et al.*, 2003). If so, that might occur if they ascend unusually quickly when exposed to aversive sounds. However, the interpretation that the effect was related to decompression injury is unproven (Piantadosi and Thalmann, 2004; Fernandez *et al.*, 2004). Even if that effect can occur during exposure to mid-frequency sonar, there is no evidence that this type of effect occurs in response to low-frequency airgun sounds. It is especially unlikely in the case of the proposed survey, involving only 1 or 2 airguns that will operate in any one location only briefly.

In summary, little is known about the potential for seismic survey sounds to cause either auditory impairment or other non-auditory physical effects in marine mammals. Available data suggest that such effects, if they occur at all, would be limited to short distances from the sound source. However, the available data do not allow for meaningful quantitative predictions of the numbers (if any) of marine mammals that might be affected in these ways. Marine mammals that show behavioral avoidance of seismic vessels, including most baleen whales, some odontocetes, and some pinnipeds, are unlikely to incur auditory impairment or other physical effects. Also, the planned mitigation and monitoring measures are expected to minimize any possibility of serious injury, mortality or strandings.

Possible Effects of Mid-frequency Sonar Signals

A SeaBeam 2112 multi-beam 12–kHz bathymetric sonar system and a sub-bottom profiler will be operated from the source vessel nearly continuously during the planned study. A pinger will be operated during all coring.

Sounds from the SeaBeam 2112 multi-beam sonar system are very short pulses, depending on water depth. Most of the energy in the sound pulses emitted by the multi-beam is at moderately high frequencies, centered at 12 kHz. The beam is narrow (approximately 2°) in fore-aft extent and wide (approximately 130°) in the cross-track extent. Any given mammal at depth near the trackline would be in the main beam for only a fraction of a second. Navy sonars that have been linked to avoidance reactions and stranding of cetaceans generally: (1) are more powerful than the SeaBeam 2112 sonar, (2) have a longer pulse duration, and (3) are directed close to horizontally (vs. downward for the SeaBeam sonars). The area of possible influence of the bathymetric sonar is much smaller-a narrow band oriented in the cross-track direction below the source vessel. Marine mammals that encounter the bathymetric sonar at close range are unlikely to be subjected to repeated pulses because of the narrow fore-aft width of the beam, and will receive only small amounts of pulse energy because of the short pulses and ship speed. In assessing the possible impacts of the 15.5–kHz Atlas Hydrosweep (similar to the SeaBeam sonar), Boebel *et al.* (2004) noted that the critical sound pressure level at which TTS may occur is 203.2 dB re 1 microPa (rms). The critical region included an area of 43 m (141 ft) in depth, 46 m (151 ft) wide athwartship, and 1 m (3.3 ft) fore-and-aft (Boebel *et al.*, 2004). In the more distant parts of that (small) critical region, only slight TTS would be incurred. Therefore, as harassment or injury from pulsed sound is a function of total energy received, the actual harassment or injury threshold for the bathymetric sonar signals (approximately 10 ms) would be at a much higher dB level than that for

longer duration pulses such as seismic signals. As a result, NMFS believes that marine mammals are unlikely to be harassed or injured from the SeaBeam multibeam sonars.

Sounds from the sub-bottom profiler are very short pulses; pulse duration ranges from 0.5 to 25 milliseconds, and the interval between pulses can range between 0.25 s and 10 s, depending upon water depth. A 3.5–kHz transducer emits a conical beam with a width of 26° and the 12 kHz transducer emits a conical beam with a width of 30°. The swept (chirp) frequency ranges from 2.75 kHz to 6 kHz. Most of the energy from the sub-bottom profiler is directed downward from the transducer array. Sound levels have not been measured directly for the sub-bottom profiler used by the Healy, but Burgess and Lawson (2000) measured sounds propagating more or less horizontally from a similar unit with similar source output (205 dB re 1 microPa m). The 160– and 180– dB re 1 microPa rms radii, in the horizontal direction, were estimated to be, respectively, near 20 m (66 ft) and 8 m (26 ft) from the source, as measured in 13 m or 43 ft water depth. The corresponding distances for an animal in the beam below the transducer would be greater, on the order of 180 m (591 ft) and 18 m (59 ft), assuming spherical spreading.

Sounds from the 12–kHz pinger are very short pulses, occurring for 0.5, 2, or 10 ms once every second, with source level approximately 192 dB re 1 microPa at a one pulse per second rate. The 12–kHz signal is omnidirectional. The pinger produces sounds that are within the range of frequencies used by small odontocetes and pinnipeds that occur or may occur in the area of the planned survey.

Masking by Mid-frequency Sonar Signals

Marine mammal communications will not be masked appreciably by the multibeam sonar signals or the sub-bottom profiler given the low duty cycle and directionality of the sonars and the brief period when an individual mammal is likely to be within its beam. Furthermore, the 12–kHz multi-beam will not overlap with the predominant frequencies in baleen whale calls, further reducing any potential for masking in that group.

While the 12–kHz pinger produces sounds within the frequency range used by odontocetes that may be present in the survey area and within the frequency range heard by pinnipeds, marine mammal communications will not be masked appreciably by the pinger signals. This is a consequence of the relatively low power output, low duty cycle, and brief period when an individual mammal is likely to be within the area of potential effects. In the case of mysticetes, the pulses do not overlap with the predominant frequencies in the calls, which would avoid significant masking.

Behavioral Responses Resulting from Mid-frequency Sonar Signals

Behavioral reactions of free-ranging marine mammals to military and other sonars appear to vary by species and circumstance. Observed reactions have included silencing and dispersal by sperm whales (Watkins *et al.*, 1985), increased vocalizations and no dispersal by pilot whales (Rendell and Gordon, 1999), and the previously-mentioned strandings by beaked whales. Also, Navy personnel have described observations of dolphins bow-riding adjacent to bow-mounted mid-frequency sonars during sonar transmissions. However, all of these observations are of limited relevance to the present situation. Pulse durations from these sonars were much longer than those of the bathymetric sonars to be used during the proposed survey, and a given mammal would have received many pulses from the naval sonars. During UAF's operations, the individual pulses will be very short, and a given mammal would not receive many of the downward-directed pulses as the vessel passes by.

Captive bottlenose dolphins and a white whale exhibited changes in behavior when exposed to 1–s pulsed sounds at frequencies similar to those that will be emitted by the bathymetric sonar to be used by UAF and to shorter broadband pulsed signals. Behavioral changes typically involved what appeared to be deliberate attempts to avoid the sound exposure (Schlundt *et al.*, 2000; Finneran *et al.*, 2002). The relevance of these data to free-ranging odontocetes is uncertain and in any case the test sounds were quite different in either duration or bandwidth as compared to those from a bathymetric sonar.

UAF and NMFS are not aware of any data on the reactions of pinnipeds to sonar sounds at frequencies similar to those of the 12–kHz multibeam sonar. Based on observed pinniped responses to other types of pulsed sounds, and the likely brevity of exposure to the bathymetric sonar sounds, pinniped reactions are expected to be limited to startle or otherwise brief responses of no lasting consequences to the individual animals.

The pulsed signals from the pinger are much weaker than those from the bathymetric sonars and sub-bottom profiler. In summary, NMFS does not anticipate behavioral disturbance from the mid-frequency sources discussed unless marine mammals get very close to the source.

Hearing Impairment and Other Physical Effects

Given recent stranding events that have been associated with the operation of naval sonar, there is concern that sonar noise can cause serious impacts to marine mammals. However, the multi-beam sonars proposed for use by UAF are quite different than sonars used for navy operations. Pulse duration of the bathymetric sonars is very short relative to the naval sonars. Also, at any given location, an individual marine mammal would be in the beam of the multi-beam sonar for much less time given the generally downward orientation of the beam and its narrow fore-aft beam-width. (Navy sonars often use near-horizontally-directed sound.) These factors would all reduce the sound energy received from the multi-beam sonar relative to that from the sonars used by the Navy. Therefore, hearing impairment by multi-beam bathymetric sonar is unlikely.

Source levels of the sub-bottom profiler are much lower than those of the airguns and the multi-beam sonar, which are discussed above. Sound levels from a sub-bottom profiler similar to the one on the *Healy* were estimated to decrease to 180 dB re 1 μPa (rms) at 8 m (26 ft) horizontally from the source (Burgess and Lawson, 2000), and at approximately 18 m (59 ft) downward from the source. Furthermore, received levels of pulsed sounds that are necessary to cause temporary or especially permanent hearing impairment in marine mammals appear to be higher than 180 dB (see earlier). Thus, it is unlikely that the sub-bottom profiler produces pulse levels strong enough to cause hearing impairment or other physical injuries even in an animal that is (briefly) in a position near the source. The sub-bottom profiler is usually operated simultaneously with other higher-power acoustic sources. Many marine mammals will move away in response to the approaching higher-power sources or the vessel itself before the mammals would be close enough for there to be any possibility of effects from the less intense sounds from the sub-bottom profiler. In the case of mammals that do not avoid the approaching vessel and its various sound sources, mitigation measures that would be applied to minimize effects of the higher-power sources would further reduce or eliminate any minor effects of

the sub-bottom profiler. Given the brevity of the pulses from each source [sub-bottom profiler, multi-beam sonar, airgun(s)], and the directionality of the first two sources, it would be rare for an animal to receive pulses from 2 or 3 of the sources simultaneously. In the unlikely event that simultaneous reception did occur, the combined received level would be little different from that attributable to the strongest single source (see equation 2.9 in Richardson *et al.* 1995, p. 30).

Source levels of the pinger are much lower than those of the G. airgun and bathymetric sonars. It is unlikely that the pinger produces pulse levels strong enough to cause temporary hearing impairment or (especially) physical injuries even in an animal that is (briefly) in a position near the source.

Mitigation

For the proposed seismic survey in the Arctic Ocean in August - September 2005, UAF will use airgun sources involving one or two airguns and a downward direction of energy. The downward directional nature of the airgun(s) to be used in this project is an important mitigating factor as it will result in reduced sound levels at any given horizontal distance as compared with the levels expected at that distance if the source were omnidirectional with the stated nominal source level. The relatively small size of these sources is also an important mitigation measure that will reduce the potential for effects relative to those that might occur with large airgun arrays. This measure is in conformance with NMFS policy of encouraging seismic operators to use the lowest intensity airguns practical to accomplish research objectives.

The following mitigation measures, as well as marine mammal visual monitoring (discussed later in this document), will be implemented for the subject seismic survey: (1) speed and course alteration (provided that they do not compromise operational safety requirements); (2) power or shut-down procedures; (3) special mitigation measures (shut-downs) for the North Atlantic right whale and Northeast Atlantic bowhead whale, because of special concern associated with their very low population sizes, and (4) ramp-up procedures.

Speed and Course Alteration

If a marine mammal is detected outside its respective safety zone (180 dB for cetaceans, 190 dB for pinnipeds) and, based on its position and the relative motion, is likely to enter the safety zone, the vessel's speed and/or direct course may, when practical and safe, be changed in a manner that also minimizes the effect to the planned science objectives. The marine mammal activities and movements relative to the seismic vessel will be closely monitored to ensure that the marine mammal does not approach within the safety zone. If the mammal appears likely to enter the safety zone, further mitigative actions will be taken (i.e., either further course alterations or shut down of the airguns).

Power-down Procedures

A power-down involves decreasing the number of airguns in use such that the radius of the 180–dB (or 190–dB) zone is decreased to the extent that marine mammals are not in the safety zone. A power down may also occur when the vessel is moving from one seismic line to another. During a power-down, one airgun is operated. In this project, a power-down is possible when the two G. gun array is in use, but not when single Bolt airgun is in use. The continued operation of one airgun is intended to alert marine mammals to the presence of the seismic vessel in the area. In contrast, a shut-down occurs when all airgun activity is suspended.

If a marine mammal is detected outside the safety radius but is likely to enter the safety radius, and if the vessel's speed and/or course cannot be changed to avoid having the mammal enter the safety radius, the airguns may (as an alternative to a complete shut-down) be powered down before the mammal is within the safety radius. Likewise, if a mammal is already within the safety zone when first detected, the airguns will be powered down immediately if this is a reasonable alternative to a complete shut-down. During a power-down of the 2–G. gun system, one airgun (e.g., 250 in^3) will be operated. If a marine mammal is detected within or near the smaller safety radius around that single airgun (Table 2), the other airgun will be shut down (see next subsection).

Following a power-down, airgun activity will not resume until the marine mammal has cleared the safety zone. The safety zones for both one and two Sodera 250–in^3 G. guns, as well as the single 1200–in^3 Bolt airgun at both 180 and 190 dB, are described in Table 1. The animal will be considered to have cleared the safety zone if it is visually observed to have left the safety zone, if it has not been seen within the zone for 15 minutes in the case of small odontocetes and pinnipeds, or if it has not been seen within the zone for 30 minutes in the case of mysticetes and large odontocetes, including sperm and beaked whales.

Shut-down Procedures

The operating airgun(s) will be shut down completely if a marine mammal approaches or enters the then-applicable safety radius and a power down is not practical. The operating airgun(s) will also be shut down completely if a marine mammal approaches or enters the estimated safety radius of the source that would be used during a power down.

Airgun activity will not resume until the marine mammal has cleared the safety radius. The animal will be considered to have cleared the safety radius if it is visually observed to have left the safety radius, or if it has not been seen within the radius for 15 min (small odontocetes, pinnipeds, and sea turtles) or 30 min (mysticetes and large odontocetes, including sperm and beaked whales).

In the unlikely event a right whale is sighted by the vessel-based observers, or if a bowhead is sighted in the Svalbard area, the airgun(s) will be shut down regardless of the distance of the whale from the airgun(s).

Start-Up Procedures

A ''ramp-up'' procedure will be followed when the 2–G. gun cluster begins operating after a specified-duration period without airgun operations. NMFS normally recommends that the rate of ramp up be no more than 6 dB per 5–min period. The specified period depends on the speed of the source vessel and the size of the airgun array being used. Ramp-up will begin with one of the two G. guns (250 in^3). The other G. gun will be added after a period of 5 min. This will result in an increase of no more than 6 dB per 5–min period when going from one G. gun to the full two G. gun system, which is the normal rate of ramp up for larger airgun arrays. During the ramp-up (i.e. when only one G. gun is operating), the safety zone for the full two G. gun system will be maintained.

If the complete safety radius has not been visible for at least 30 min prior to the start of operations in either daylight or nighttime, ramp-up will not commence unless one G. gun has been operating during the interruption of the seismic survey operations. This means that it will not be permissible to ramp up the two-G. gun source from a complete shut down in thick fog or at other times when the outer part of the safety zone is not visible. If the entire safety radius is visible using vessel lights and/or night vision devices (NVDs) (as may be possible under moonlit and calm conditions), then start-up of the airguns from a shut-down

may occur at night. If one airgun has operated during a power-down period, ramp up to full power will be permissible at night or in poor visibility, on the assumption that marine mammals will be alerted to the approaching seismic vessel by the sounds from the single airgun and could move away if they chose. Ramp-up of the airguns will not be initiated if a marine mammal is sighted within or near the applicable safety radii during the day or a night.

Marine Mammal Monitoring

Vessel-based marine mammal observers (MMOs) will monitor marine mammals near the seismic source vessel during all daytime hours and during any start ups of the airgun(s) at night. Airgun operations will be powered down or shut down when marine mammals are observed within, or about to enter, designated safety radii where there is a possibility of significant effects on hearing or other physical effects. Vessel-based MMOs will also watch for marine mammals near the seismic vessel for at least 30 min prior to the planned start of airgun operations after an extended shut down of the airgun. When feasible, observations will also be made during daytime periods without seismic operations (e.g., during transits and during coring operations).

During seismic operations across the Arctic Ocean, four observers will be based aboard the vessel. MMOs will be appointed by UAF with NMFS concurrence. A Barrow resident knowledgeable about the mammals and fish of the area is expected to be included in the MMO team aboard the Healy. At least one observer, and when practical two observers, will monitor marine mammals near the seismic vessel during ongoing daytime operations and nighttime start ups of the airgun. Use of two simultaneous observers will increase the proportion of the animals present near the source vessel that are detected. MMOs will normally be on duty in shifts of duration no longer than 4 hours. The USCG crew will also be instructed to assist in detecting marine mammals and implementing mitigation requirements (if practical). Before the start of the seismic survey the crew will be given additional instruction on how to do so.

The *Healy* is a suitable platform for marine mammal observations. When stationed on the flying bridge, the eye level will be 27.7 m (91 ft) above sea level, and the observer will have an unobstructed view around the entire vessel. If surveying from the bridge, the observer's eye level will be 19.5 m (64 ft) above sea level and approximately 25° of the view will be partially obstructed directly to the stern by the stack. During daytime, the MMOs will scan the area around the vessel systematically with reticle binoculars (e.g., 7 . 50 Fujinon) and with the naked eye. During darkness, NVDs will be available (ITT F500 Series Generation 3 binocular-image intensifier or equivalent), if and when required. Laser rangefinding binoculars (Leica LRF 1200 laser rangefinder or equivalent) will be available to assist with distance estimation. Those are useful in training observers to estimate distances visually, but are generally not useful in measuring distances to animals directly.Taking into consideration the additional costs of prohibiting nighttime operations and the likely impact of the activity (including all mitigation and monitoring), NMFS has determined that the required mitigation and monitoring ensures that the activity will have the least practicable impact on the affected species or stocks. Two marine mammal observers will be required to monitor the safety radii (using shipboard lighting or NVDs at night) for at least 30 minutes before ramp-up begins and verify that no marine mammals are in or approaching the safety radii; start-up may not begin unless the entire safety radii are visible; and marine mammals will have sufficient notice of a vessel approaching with an operating seismic airgun, thereby giving them an opportunity to avoid the approaching noise source. Additionally, a power-down or shut-down will occur if a marine mammal is detected within the safety radius.

Passive Acoustic Monitoring Using Sonobuoys

At the request of interested parties in the scientific field, UAF developed a method and procured additional equipment to implement a passive acoustic marine mammal monitoring program utilizing sonobuoys already in use for other purposes on the *Healy*'s Arctic cruise. Details and the proposed protocols are outlined below.

The University of Alaska has obtained approximately 300 sonobuoys for use during the marine seismic survey by the *Healy* across the Arctic Ocean. Two hundred of the sonobuoys are of the type AN/SSQ–57SPC; an additional 100 sonobuoys will also be available. The sonobuoys will primarily be used to obtain seismic information during the survey. However, as a secondary function, they will also be used to passively monitor for marine mammal vocalizations during the survey. The use of sonobuoys for passive acoustic monitoring of marine mammals is in lieu of using a towed hydrophone array, as ice conditions, deployment logistics, and personnel limitations would complicate the use of this type of equipment in the survey area.

The sonobuoys will be launched from the fantail approximately every 4 hours while underway, and they will be set to transmit signals for up to 8 hours. The MMOs will be able to listen to the signals from the sonobuoys in real time, concurrently while observing. The signals will be fed to the MMO station through the ship's network and/or via FM radio. MMOs will listen to the signals by use of weatherproof speakers or noise-canceling headphones. The strong airgun pulses will be blanked out, as necessary to allow the MMOs to listen effectively for marine mammal vocalizations. Laptop computers with acoustic software to display, analyze, and save acoustic samples will be available for use for the MMOs, when appropriate.

It is tentatively planned that at least one MMO will listen to the sonobuoy signals for a minimum of 10 minutes during each 30–minute period of visual watch when a useable sonobuoy signal is available. The specific acoustic survey protocol may need to be amended early in the cruise, as simultaneous visual and acoustic monitoring by the same MMO is a new approach for a seismic survey. Some details may require refinement when the planned procedures are first implemented. The times when sonobuoy signals are monitored will be noted, along with the other information routinely recorded by MMOs during their visual watches. When there is an acoustic encounter with marine mammal(s), the details will be documented in a manner consistent with that used during passive acoustic monitoring in previous L-DEO cruises. Samples of the marine mammal sounds will be recorded via the laptop computer.

The sonobuoys are broadband receivers, and their sensitivity ranges from 10 Hz to 20 kHz. Thus, any vocalizing marine mammal (e.g., bowhead whale, beluga, narwhal, bearded seal) in the survey area near the Healy could be detected with the sonobuoys, providing that there is not too much background noise (e.g., seismic sounds, ship noise, ice noise) that could mask marine mammal signals.

Even though marine mammal vocalizations may be detected during the survey, acoustic detections will not be used directly to implement mitigation measures. The sonobuoys will be located at varying distances

behind the vessel (depending on time since deployment and vessel speed), and the marine mammal sounds received may be from several kilometers away. Also, the sonobuoys are omnidirectional, with no ability to determine the locations of the calling mammals. However, the information about marine mammal presence gained from the sonobuoy signals will supplement visual observations, which will often be restricted by ice and/or poor visibility. The sonobuoys will provide a means of detecting (calling) marine mammals over a larger and to some degree different area than is monitored visually. Thus, the sonobuoys will be useful in identifying the presence of marine mammals of various species in different regions along the survey track, but not in determining their specific locations relative to the airguns.

Reporting

UAF will submit a report to NMFS within 90 days after the end of the cruise. The report will describe the operations that were conducted and the marine mammals that were detected near the operations. The report will provide full documentation of methods, results, and interpretation pertaining to all monitoring. The 90–day report will summarize the dates and locations of seismic operations, and all marine mammal sightings (dates, times, locations, activities, associated seismic survey activities). The report will also include estimates of the amount and nature of potential ''take'' of marine mammals by harassment or in other ways.

Estimates of Take by Harassment for the Arctic Ocean Seismic Survey

Given the requested mitigation (above), all anticipated takes involve a temporary change in behavior that may constitute Level B harassment. The mitigation measures will minimize or eliminate the possibility of Level A harassment or mortality. UAF has calculated both ''best estimates'' and ''maximum estimates'' for the numbers of animals that could be taken by Level B harassment during the proposed Arctic Ocean seismic survey using data obtained during marine mammal surveys in and near the Arctic Ocean (Stirling *et al.*, 1982, Kingsley, 1986, Christensen *et al.*, 1992, Koski and Davis, 1994, Moore *et al.*, 2000a, Whitehead, 2002, and Moulton and Williams, 2003) and on estimates of the sizes of the areas where effects could potentially occur (Table 2).

This section provides estimates of the number of potential ''exposures'' of marine mammals to sound levels ≥160, the criteria for the onset of Level B Harassment, by operations with the two-G. gun array (500 in^3) or the single Bolt airgun (1200 in^3). No animals are expected to exhibit responses to the sonars, sub-bottom profiler, or pinger given their characteristics described previously (e.g., narrow, downward-directed beam). Therefore, no additional incidental takings are included for animals that might be affected by the multi-beam sonars or 12–kHz pinger.

Table 2 incorporates corrected density estimates and provides the best estimate of the numbers of each species that would be exposed to seismic sounds greater than 160 dB. Estimates are based on consideration of numbers of marine mammals that might be disturbed by 5164 km of seismic surveys across the Arctic Ocean, which includes a 25–percent allowance over the planned 4131–km track to allow for turns, lines that might have to be repeated due to poor data quality, or for minor changes to the survey design. A detailed description on the methodology used by UAF to arrive at the estimates of Level B harassment takes that are provided in Table 2 can be found in UAF's IHA application for the Arctic Ocean survey.

BILLING CODE 3510–22–S

Table 2. Estimates of the possible numbers of marine mammal exposures to 160 dB during UAF's proposed seismic program in the polar pack ice between Alaska and Svalbard, August-September 2005. The proposed sound sources are two G. guns with volume 250 in^3 each or a single Bolt airgun with volume 1200 in^3. Received levels of airgun sounds are expressed in dB re 1 μPa (rms, averaged over pulse duration). Species with stars are listed as endangered under the ESA.

	Number of Exposures to Sound Levels ≥ 160dB								
	Best Estimate				Maximum Estimate				NMFS Authorized Take
Species	Barrow	Polar Pack	Svalbard	Total	Barrow	Polar Pack	Svalbard	Total	
Delphinidae									
Atlantic white-beaked dolphin	0	0	0	0	0	0	0	0	**10**
Atlantic white-sided dolphin	0	0	0	0	0	0	0	0	**10**
Killer whale	0	0	0	0	0	0	0	0	**5**
Long-finned pilot whale	0	0	0	0	0	0	0	0	**10**
Odontocetes									
* Sperm whale	0	0	0	0	0	0	0	0	**0**
Ziphidae									
Northern bottlenose whale	0	0	0	0	0	0	0	0	**5**
Mondontidae									
Beluga	27	2	0	29	107	10	0	117	**117**
Narwhal	0	38	1	39	1	153	2	156	**156**
Phocoenidae									
Harbor porpoise	0	0	0	0	0	0	0	0	**5**
Mysticetes									
* North Atlantic right whale	0	0	0	0	0	0	0	0	**0**
* Bowhead whale	51	9	0	61	202	36	0	238	**238**
Gray whale	5	0	0	5	20	0	0	20	**20**
* Humpback whale	0	0	0	0	0	0	0	0	**0**
Minke whale	0	0	0	0	0	0	0	0	**5**
* Sei whale	0	0	0	0	0	0	0	0	**0**
* Fin whale	0	0	0	0	0	0	0	0	**0**
* Blue whale	0	0	0	0	0	0	0	0	**0**
Pinnipeds									
Walrus (difficult to predict)	2(?)	0	0	2(?)	8(?)	0	0	8(?)	
Bearded seal	10	17	12	39	20	70	21	111	**111**
Harbor seal	0	0	0	0	0	0	0	0	**2**
Spotted seal	1	0	0	1	4	0	0	4	**5**
Ringed seal	1986	152	236	2373	3512	607	417	4536	**4536**
Hooded seal	0	0	4	4	0	0	7	7	**7**
Harp seal	0	0	12	12	0	0	21	21	**21**
Carnivora									
Polar bear	13	2	2	17	32	5	4	41	

Effects on Cetaceans

Strong avoidance reactions by several species of mysticetes to seismic vessels have been observed at ranges up to 6–8 km (3–4 nm) and occasionally as far as 20–30 km (11–16 nm) from the source vessel, although, the sources in these observations were more powerful than those used in this project. However, reactions at the longer distances appear to be atypical of most species and situations, particularly when feeding whales are involved (Miller *et al.* 2005). Fewer than 66 mysticetes are expected to be encountered during the proposed survey in the Arctic Ocean (Table 2) and disturbance effects would be confined to shorter distances given the relatively low-energy acoustic source to be used during this project. Also, based on calibration of 160–dB radii data obtained in deep water (Tolstoy *et al.*, 2004), the estimated numbers presented in Table 2 are considered overestimates of actual numbers that may be harassed.

Odontocete reactions to seismic pulses, or at least the reactions of dolphins, are expected to extend to lesser distances than are those of mysticetes. Odontocete low-frequency hearing is less sensitive than that of mysticetes, and dolphins are often seen from seismic vessels. In fact, there are documented instances of delphinids and Dall's porpoise approaching active seismic vessels. However, dolphins, as well as some other types of odontocetes, sometimes show avoidance responses and/or other changes in behavior when near operating seismic vessels.

Taking into account the small total volume and relatively low sound output of the sources proposed in this project, and the mitigation measures that are planned, effects on cetaceans are generally expected to be limited to avoidance of a small area around the seismic operation and short-term changes in behavior, falling within the MMPA definition of Level B harassment. Furthermore, the estimated

numbers of animals potentially exposed to sound levels sufficient to cause appreciable disturbance are very low percentages of the affected populations, as described below.

Based on the 160–dB criterion, the best estimates of the numbers of individual cetaceans that may be exposed to sounds ≥160 dB re 1 microPa (rms) represent <1 percent of the populations of each species in the Arctic Ocean and adjacent waters. For species listed as endangered under the Endangered Species Act (ESA), estimates include no exposure for North Atlantic right whales, humpback, sei whales, fin, sperm, or blue whales; and ≥0.6 percent of the Bering-Chukchi-Beaufort bowhead whale population of >10,470+. In the cases of belugas, narwhals and gray whales, the potential reactions are expected to involve no more than very small numbers (29 to 35) of exposures.

Low numbers of monodontids may be exposed to sounds produced by the 1 or 2 airguns during the proposed seismic study, and the numbers potentially affected are small relative to the population sizes. The best estimates of the numbers of belugas and narwhals that might be exposed to ≥160 dB represent <1 percent of their populations. This assumes that narwhals encountered in the polar pack ice in the central Arctic Ocean belong to the Baffin Bay Davis Strait population. If they are actually members of the East Greenland population, then the estimated size of that population is too low because it did not include surveys of the central Arctic Ocean.Two estimates of the numbers of marine mammals that might be exposed to sounds from the 2–G. gun array or the single Bolt airgun during the 2005 trans-Arctic seismic survey were presented in Table 2, depending on the density criteria used (best vs. maximum). UAF requested ''take authorizations'' for each species based on the estimated maximum number of exposures to ≥160 dB re 1 microPa (rms), i.e., the highest of the various estimates. That figure likely overestimates the actual number of animals that will be exposed to the sound (see above). Their request included take of very small numbers (5 or less each) of sperm whales, North Atlantic right whales, humpback whales, sei whales, fin whales, and blue whales. However, the NMFS Division of Endangered Species determined that the Arctic seismic cruise was not likely to adversely affect those six species, the NMFS Division of Permits, Conservation, and Education concurred with their findings, and is, therefore, not authorizing take under the MMPA. NMFS is authorizing the numbers of take of each of the 9 cetacean species listed in Table 2.

Mitigation measures such as controlled speed, course alteration, observers, ramp ups, and shut downs when marine mammals are seen within defined ranges should further reduce short-term reactions, and minimize any effects on hearing. In all cases, the effects are expected to be short-term, with no lasting biological consequence. In light of the type of take expected and the small percentages of affected stocks of cetaceans, the action is expected to have no more than a negligible impact on the affected species or stocks of cetaceans.

Effects on Pinnipeds

Two pinniped species (ringed seal and bearded seal) are likely to be encountered in the study area. Also, it is possible that a small number (0–12) of harp seals, hooded seals, spotted seals, harbor seals, or walruses may be encountered. An estimated 2373 individual ringed seals and 111 bearded seals (<0.5 percent their Arctic Ocean and adjacent waters population) may be exposed to airgun sounds at received levels greater than or equal to 160 dB re 1 microPa (rms) during the seismic survey. It is probable that only a small percentage of those individuals would actually be disturbed. NMFS is authorizing the requested take for the pinniped species (Table 2). Effects are expected to be limited to short-term and localized behavioral changes falling within the MMPA definition of Level B harassment. As is the case for cetaceans, the short-term exposures to sounds from the sources in this project are not expected to result in any long-term consequences for the individuals or their populations and the activity is expected to have no more than a negligible impact on the affected species or stocks of pinnipeds.

Effects on Polar Bears

Effects on polar bears are anticipated to be minor at most. Although the best estimate of polar bears that will be encountered during the survey is 16, almost all of these would be on the ice, and therefore they would be unaffected by underwater sound from the airgun(s). For the few bears that are in the water, levels of airgun and sonar sound would be attenuated because polar bears generally do not dive far below the surface or for a long duration. Received levels of airgun sound are reduced substantially just below the surface, relative to those at deeper depths, because of the pressure release effect at the surface.

Possible Effects of Activities on Marine Mammal Habitat

The proposed seismic survey will not result in any permanent impact on habitats used by marine mammals, or to the food sources they utilize. The main impact of the proposed activity will be temporarily elevated noise levels and the associated direct effects on marine mammals.

One of the reasons for the adoption of airguns as the standard energy source for marine seismic surveys was that they (unlike the explosives used in the distant past) do not result in any appreciable fish kill. Various experimental studies showed that airgun discharges cause little or no fish kill, and that any injurious effects were generally limited to the water within a meter or so of an airgun. However, it has recently been found that injurious effects on captive fish, especially on fish hearing, may occur at somewhat greater distances than previously thought (McCauley *et al.*, 2000a,b, 2002; 2003). Even so, any injurious effects on fish would be limited to short distances from the source. Also, many of the fish that might otherwise be within the injury-zone are likely to be displaced from this region prior to the approach of the airguns through avoidance reactions to the passing seismic vessel or to the airgun sounds as received at distances beyond the injury radius.

Fish often react to sounds, especially strong and/or intermittent sounds of low frequency. Sound pulses at received levels of 160 dB re 1 microPa (peak) may cause subtle changes in behavior. Pulses at levels of 180 dB (peak) may cause noticeable changes in behavior (Chapman and Hawkins, 1969; Pearson *et al.*, 1992; Skalski et al., 1992). It also appears that fish often habituate to repeated strong sounds rather rapidly, on time scales of minutes to an hour. However, the habituation does not endure, and resumption of the disturbing activity may again elicit disturbance responses from the same fish.

Fish near the airguns are likely to dive or exhibit some other kind of behavioral response. This might have short-term impacts on the ability of cetaceans to feed near the survey area. However, only a small fraction of the available habitat would be ensonified at any given time, and fish species would return to their pre-disturbance behavior once the seismic activity ceased. Thus, the proposed surveys would have little impact on the abilities of marine mammals to feed in the area where seismic work is planned. Some of the fish that do not avoid the approaching

airguns (probably a small number) may be subject to auditory or other injuries.

Zooplankton that are very close to the source may react to the airgun's shock wave. These animals have an exoskeleton and no air sacs; therefore, little or no mortality is expected. Many crustaceans can make sounds and some crustacea and other invertebrates have some type of sound receptor. However, the reactions of zooplankton to sound are not known. Some mysticetes feed on concentrations of zooplankton. A reaction by zooplankton to a seismic impulse would only be relevant to whales if it caused a concentration of zooplankton to scatter. Pressure changes of sufficient magnitude to cause this type of reaction would probably occur only very close to the source, so few zooplankton concentrations would be affected. Impacts on zooplankton behavior are predicted to be negligible, and this would translate into negligible impacts on feeding mysticetes.

Possible Effects of Activities on Subsistence Needs

Subsistence remains the basis for Alaska Native culture and community. Subsistence hunting and fishing continue to be prominent in the household economies and social welfare of some Alaskan residents, particularly among those living in small, rural villages (Wolfe and Walker, 1987). In rural Alaska, subsistence activities are often central to many aspects of human existence, including patterns of family life, artistic expression, and community religious and celebratory activities.

Marine mammals are legally hunted in Alaskan waters near Barrow by coastal Alaska Natives. Nearby communities with subsistence economies include Barrow, Nuisqsut, and Kaktovik. Species hunted include bowhead whales, beluga whales, ringed, spotted, and bearded seals, walrus, and polar bears. In the Barrow area, bowhead whales provided approximately 69 percent of the total weight of marine mammals harvested from April 1987 to March 1990. During that time, on a numerical basis, ringed seals were harvested the most frequently (394 animals). More detailed information regarding the level of subsistence by species is provided in the application (UAF, 2005).

In the event that both marine mammals and hunters would be near the *Healy* when it begins operating north of Barrow, the proposed project could potentially impact the availability of marine mammals for harvest in a very small area immediately around the *Healy*. However, the majority of marine mammals are taken by hunters are within approximately 33 km (18 nm) off shore, and the *Healy* is expected to commence the seismic survey more than 200 km (108 nm) offshore. Operations in that area are scheduled to occur in August, and hunting in offshore waters generally does not occur at that time of year (the bowhead hunt near Barrow normally does not begin until more than a month later). Considering that, and the limited times and location where the planned seismic survey overlaps with hunting areas, the proposed project is not expected to have an unmitigable adverse effect on the availability of marine mammals for subsistence harvest.

In Norwegian waters, a limited amount of hunting takes place on or near Svalbard. The human population of Svalbard is approximately 1700. Of the marine mammals found near Svalbard only the minke whale, bearded seal, and ringed seal may be taken by local hunters (the commercial sealing grounds for harp and hooded seals are distant from Svalbard). The seismic survey will terminate northwest of Svalbard territorial waters. Any ship operations closer to Svalbard will be similar to those of other vessels operating in the area, will not involve airgun operations, and will not adversely impact subsistence harvests.

Endangered Species Act

Under section 7 of the ESA, NSF and the NMFS Division of Permits, Conservation, and Education consulted with the NMFS Endangered Species Division regarding take of ESA-listed species during this activity and as a result of the issuance of an IHA under section 101(a)(5)(D) of the MMPA for this activity. In a Biological Opinion (BO) issued on August 4, 2005, NMFS concluded that the UAF's 2005 seismic survey across the Arctic and the issuance of the associated IHA are not likely to jeopardize the continued existence of threatened or endangered species (specifically the bowhead whale) under the jurisdiction of NMFS or destroy or adversely modify any designated critical habitat. NMFS has issued an incidental take statement (ITS) for the take of up to 238 bowhead whales, which contains reasonable and prudent measures with implementing terms and conditions to minimize the effects of this take. This IHA action is within the scope of the previously analyzed action and does not change the action in a manner that was not considered previously. The terms and conditions of the BO have been incorporated into the IHA.

National Environmental Policy Act (NEPA)

NSF prepared an EA of a Marine Geophysical Survey by the Coast Guard Cutter Healy Across the Arctic Ocean, August - September 2005 and issued a Finding of No Significant Impact (FONSI) on June 7, 2005. NMFS posted NSF's EA on the NMFS website concurrently with the **Federal Register** receipt of application notice and received public comment on both the proposed IHA and the EA. NMFS then adopted NSF's EA and issued a FONSI on August 2, 2005. Therefore, preparation of an EIS on this action is not required by section 102(2) of the NEPA or its implementing regulations. A copy of the EA and FONSI are available upon request (see **ADDRESSES**).

Conclusions

NMFS has determined that the impact of conducting the seismic survey in the Arctic Ocean may result, at worst, in a temporary modification in behavior (Level B Harassment) by certain species small numbers of marine mammals. This activity is expected to result in no more than a negligible impact on the affected species or stocks.

For reasons stated previously in this document, this determination is supported by: (1) the likelihood that, given sufficient notice through slow ship speed and ramp-up, marine mammals are expected to move away from a noise source that is annoying prior to its becoming potentially injurious; (2) recent research that indicates that TTS is unlikely (at least in delphinids) until levels closer to 200–205 dB re 1 microPa are reached rather than 180 dB re 1 microPa; (3) the fact that 200–205 dB isopleths would be well within 100 m (328 ft) of the vessel; and (4) the likelihood that marine mammal detection ability by trained observers is close to 100 percent during daytime and remains high at night to that distance from the seismic vessel. As a result, no take by injury or death is anticipated, and the potential for temporary or permanent hearing impairment is very low and will be avoided through the incorporation of the proposed mitigation measures mentioned in this document.

While the number of potential incidental harassment takes will depend on the distribution and abundance of marine mammals in the vicinity of the survey activity, the number of potential harassment takings is estimated to be small, and has been mitigated to the lowest level practicable through incorporation of the measures mentioned previously in this document.

The proposed seismic program will not interfere with any legal subsistence hunts, since seismic operations will not be conducted in the same space and time as the hunts in subsistence whaling and sealing areas. Therefore, the issuance of an IHA for this activity will not have an unmitigable adverse effect on any marine mammal species or stocks used for subsistence purposes.

Authorization

NMFS has issued a 1–year IHA to UAF for the take, by harassment, of small numbers of marine mammals incidental to conducting a low-intensity oceanographic seismic survey in the Arctic Ocean, provided the previously mentioned mitigation, monitoring, and reporting requirements are incorporated. NMFS has determined that the proposed activity would result in the harassment of small numbers of marine mammals; would have no more than a negligible impact on the affected marine mammal stocks; and would not have an unmitigable adverse impact on the availability of species or stocks for subsistence uses.

Dated: August 4, 2005.

James H. Lecky,

Director, Office of Protected Resources, Mational Marine Fisheries Service.

[FR Doc. 05–16116 Filed 8–12–05; 8:45 am]

BILLING CODE 3510–22–C

DEPARTMENT OF COMMERCE

National Oceanic and Atmospheric Administration

[I.D. 080805E]

Pacific Fishery Management Council; Public Meeting

AGENCY: National Marine Fisheries Service (NMFS), National Oceanic and Atmospheric Administration (NOAA), Commerce.

ACTION: Notice of public meeting.

SUMMARY: The Pacific Fishery Management Council's (Council) Groundfish Management Team (GMT) will hold a working meeting, which is open to the public.

DATES: The GMT meeting will be held Monday, August 29, 2005, from 1 p.m. until business for the day is completed. The GMT meeting will reconvene Tuesday, August 30 through Friday, September 2, from 8:30 a.m. until business for the day is completed.

ADDRESSES: The GMT meeting will be held at the Pacific Fishery Management Council office, West Conference Room, 7700 NE Ambassador Place, Suite 200, Portland, OR 97220–1384; telephone: (503) 820–2280.

Council address: Pacific Fishery Management Council, 7700 NE Ambassador Place, Suite 200, Portland, OR 97220–1384.

FOR FURTHER INFORMATION CONTACT: Mr. John DeVore, Groundfish Management Coordinator; telephone: 503–820–2280.

SUPPLEMENTARY INFORMATION: The purpose of the GMT meeting is to discuss groundfish management measures in place for the summer and fall months and consider inseason adjustments to ongoing West Coast groundfish fisheries; discuss implementation strategies and draft amendatory language for Groundfish Fishery Management Plan (FMP) Amendment 18; discuss draft amendatory language for FMP Amendment 19 (specifying measures to protect West Coast groundfish essential fish habitat); develop draft regulations for protecting West Coast groundfish essential fish habitat; discuss alternative revision rules for adopted groundfish rebuilding plans; discuss a draft schedule, process, and work plan for deciding 2007–08 groundfish harvest specifications and management measures; develop 2006 management specifications for spiny dogfish and Pacific cod; receive an update on development of the trawl individual quota program; review new groundfish stock assessments; and address other assignments relating to groundfish management. No management actions will be decided by the GMT. The GMT's role will be development of recommendations for consideration by the Council at its September meeting in Portland, OR.

Although non-emergency issues not contained in the meeting agenda may come before the GMT for discussion, those issues may not be the subject of formal GMT action during this meeting. GMT action will be restricted to those issues specifically listed in this notice and any issues arising after publication of this notice that require emergency action under Section 305(c) of the Magnuson-Stevens Fishery Conservation and Management Act, provided the public has been notified of the GMT's intent to take final action to address the emergency.

Special Accommodations

This meeting is physically accessible to people with disabilities. Requests for sign language interpretation or other auxiliary aids should be directed to Ms. Carolyn Porter at 503–820–2280 at least 5 days prior to the meeting date.

Dated: August 8, 2005.

Peter H. Fricke,

Acting Director, Office of Sustainable Fisheries, National Marine Fisheries Service.

[FR Doc. 05–16062 Filed 8–12–05; 8:45 am]

BILLING CODE 3510–22–S

DEPARTMENT OF COMMERCE

National Oceanic and Atmospheric Administration

[I.D. 040805A]

Small Takes of Marine Mammals Incidental to Specified Activities; Movement of Barges Through the Beaufort Sea Between West Dock and Cape Simpson, Alaska

AGENCY: National Marine Fisheries Service (NMFS), National Oceanic and Atmospheric Administration (NOAA), Commerce.

ACTION: Notice of issuance of an incidental harassment authorization.

SUMMARY: In accordance with provisions of the Marine Mammal Protection Act (MMPA) as amended, notification is hereby given that an Incidental Harassment Authorization (IHA) to take small numbers of marine mammals, by harassment, incidental to conducting a barging operation within the U.S. Beaufort Sea has been issued to FEX L.P. (FEX), a subsidiary of Talisman Energy, Inc., for a period of 1 year.

DATES: Effective from August 8, 2005 through August 7, 2006.

ADDRESSES: The authorization and application containing a list of the references used in this document may be obtained by writing to Steve Leathery, Chief, Permits, Conservation and Education Division, Office of Protected Resources, National Marine Fisheries Service, 1315 East-West Highway, Silver Spring, MD 20910–3225, or by telephoning the contact listed here. The application is also available at:*http://www.nmfs.noaa.gov/prot_res/PR2/Small_Take/smalltake_info.htm#applications*. Documents cited in this notice may be viewed, by appointment, during regular business hours, at this address.

FOR FURTHER INFORMATION CONTACT: Kenneth Hollingshead, Office of Protected Resources, NMFS, (301) 713–2289, ext 128, or Brad Smith, Alaska Region, NMFS, (907) 271–3023.

SUPPLEMENTARY INFORMATION:

Background

Sections 101(a)(5)(A) and (D) of the MMPA (16 U.S.C. 1361 *et seq.*) direct the Secretary of Commerce to allow,

upon request, the incidental, but not intentional, taking of marine mammals by U.S. citizens who engage in a specified activity (other than commercial fishing) within a specified geographical region if certain findings are made and either regulations are issued or, if the taking is limited to harassment, a notice of a proposed authorization is provided to the public for review.

An authorization may be granted if NMFS finds that the taking will have a negligible impact on the species or stock(s), will not have an unmitigable adverse impact on the availability of the species or stock(s) for subsistence uses, and that the permissible methods of taking and requirements pertaining to the monitoring and reporting of such takings are set forth. NMFS has defined ''negligible impact'' in 50 CFR 216.103 as ''...an impact resulting from the specified activity that cannot be reasonably expected to, and is not reasonably likely to, adversely affect the species or stock through effects on annual rates of recruitment or survival.''

Section 101(a)(5)(D) of the MMPA established an expedited process by which citizens of the United States can apply for an authorization to incidentally take small numbers of marine mammals by harassment. Except with respect to certain activities not pertinent here, the MMPA defines ''harassment'' as:

> any act of pursuit, torment, or annoyance which (i) has the potential to injure a marine mammal or marine mammal stock in the wild [Level A harassment]; or (ii) has the potential to disturb a marine mammal or marine mammal stock in the wild by causing disruption of behavioral patterns, including, but not limited to, migration, breathing, nursing, breeding, feeding, or sheltering [Level B harassment].

Section 101(a)(5)(D) establishes a 45-day time limit for NMFS review of an application followed by a 30-day public notice and comment period on any proposed authorizations for the incidental harassment of marine mammals. Within 45 days of the close of the comment period, NMFS must either issue or deny issuance of the authorization.

Summary of Request

On March 29, 2005, NMFS received an application from FEX for the taking of several species of marine mammals incidental to the movement of two tugs towing barges from West Dock, Prudhoe Bay, Alaska to Cape Simpson in the U.S. Beaufort Sea. The *Kavik River* (1100 horsepower (h.p.)) and the *Sag River* (1100 h.p.) or comparable class tugs, will each tow a single barge to Cape Simpson. Approximately eight round-trips will be required for project mobilization. Actual barging would be completed in an approximate 20-day period depending on ice conditions and sea states. Two barges would make the initial run to Cape Simpson, and one would be left at one of those locations to serve as a temporary dock-head. The other barge would then make approximately six round trips. At the end of the barging operation, the barge serving as a temporary dockhead and the second barge would return to West Dock. FEX will make every effort to avoid periods of whale migration and subsistence activities by completing barging by August 15th, but no later than September 1st. If necessary, a late season barging effort may be required between October 15 and November 30, 2005.

Marine barge transit of a drilling rig, consumables, fuel, essential construction equipment and supplies from West Dock to Cape Simpson will be conducted. Equipment will be staged and stored in preparation for the upcoming winter on-shore oil and gas drilling and testing season. All drilling activities and bottom hole locations will be located on Federal Northwest National Petroleum Reserve Oil and Gas Leases.

Comments and Responses

A notice of receipt and request for 30-day public comment on the application and proposed authorization was published on February 8, 2005 (70 FR 6626). During the 30-day public comment period, NMFS received comments from the Marine Mammal Commission (Commission), the Alaska Eskimo Whaling Commission (AEWC) and ASRC Energy Services/Lynx Enterprises (Lynx), on behalf of FEX.

Comment 1: Lynx notes that since the submission of the original IHA application on March 25, 2005, full details of FEX's planned barging operations have become clearer. These clarifications do not significantly change either the scope or timing of barging operations.

Response: NMFS has incorporated these minor modifications (e.g., clarification that the terminus of the barging operation will be at Cape Simpson and not Point Lonely), into this document and the IHA.

Comment 2: The Commission believes that NMFS' preliminary determinations are reasonable provided that (1) all reasonable measures will be taken to ensure the least practicable impact on the subject species; and (2) the required mitigation and monitoring activities be carried out as described in NMFS' May 6, 2005 **Federal Register** notice and subject application.

Response: The mitigation and monitoring measures described in the earlier **Federal Register** notice and this document will be carried out as described. NMFS has determined that the FEX barging operations will result in only small numbers of marine mammals being affected, would have no more than a negligible impact on these marine mammal stocks; and would not have an unmitigable adverse impact on the availability of marine mammal stocks for subsistence uses.

Comment 3: The AEWC notes that it has agreed to prepare a Conflict Avoidance Agreement (CAA) to cover the tug/barge operation. It is the AEWC's intention to have a CAA ready for signature prior to departure for the International Whaling Commission meetings.

Response: Signing the CAA supports NMFS' determination that the proposed barging operation between West Dock and Cape Simpson will not have an unmitigable adverse impact on subsistence uses of marine mammals. NMFS anticipates that this agreement will be signed shortly.

Comment 4: The AEWC notes that ceasing barging operations in this area of the U.S. Beaufort Sea by August 15th and resuming barging operations later in the fall, as proposed by FEX, is an appropriate mitigation measure. Tug/barge operations during the open water season tend to take longer than expected, usually because of unpredictable weather, ice conditions, or logistical problems. As a result, these types of operations regularly continue past their planned completion dates, creating the risk that they will interfere with the fall bowhead whale migration and subsistence hunt. The FEX planned tug/barge operation this year between Deadhorse (Prudhoe Bay) and Cape Simpson is especially risky because it is within the area used by Barrow hunters for the fall bowhead hunt. A similar tug/barge operation by a different company in 2003 is thought to have been a factor leading to a substantial deflection of bowheads offshore of Barrow that year. As a result, halting barge traffic from August 15, 2005 until the villages of Barrow, Nuiqsut, and Kaktovik have completed their fall bowhead subsistence hunt is a principal mitigation measure contained in the CAA between the AEWC and FEX this year.

Response: NMFS has incorporated this recommended mitigation measure into the IHA for FEX.

Comment 5: Lynx notes that since the submission of the original IHA

application on March 25, 2005, full details of FEX's planned marine mammal monitoring has become clearer. For example, while the marine mammal monitoring program remains the same as originally proposed, the marine mammal observers will only be allowed aboard the UIC/Bowhead Transportation self-propelled barge (i.e., Bowhead Transportation is a barging company). The Crowley Marine tug/barge unit cannot accommodate observers due to U.S. Coast Guard (USCG) crew berthing restrictions. The Bowhead Transportation barge will precede all vessels during transit, thus providing the observers opportunity to survey the route from a lead position. The Crowley unit will follow a short distance astern the Bowhead Transportation barge.

Response: NMFS appreciates the update on the monitoring plan and has amended the mitigation/monitoring section in this document.

Description of Marine Mammals Affected by the Activity

The Beaufort Sea supports many marine mammals under NMFS jurisdiction, including bowhead whales, beluga whales, ringed seals, bearded seals and spotted seals. A brief description of the biology, distribution, and current status of these species can be found in the FEX application. More detailed descriptions can be found in NMFS Stock Assessment Reports. Please refer to those documents for more information on these species. The latter document can be downloaded electronically from: *http://www.nmfs.noaa.gov/prot_res/PR2/Stock_Assessment_Program/sars.html#Stock Assessment Reports*. The FEX application is also available on-line (see **ADDRESSES**).

Potential Effects of Tug/Barge Operations and Associated Activities on Marine Mammals

Potential harassment of marine mammals will result from the noise generated by the operation of towing vessels during barge movement. The physical presence of the tugs and barges could also lead to disturbance of marine mammals by visual or other cues. The potential for collisions between tug vessels and whales will be essentially zero due to the slow tow speed (2 knots) and visual monitoring by on-board marine mammal observers.

Marine mammal species with the highest likelihood of being harassed during the tug and barge movements are: beluga whales, ringed seals, and bearded seals. Spotted seals are less likely to be harassed during the tug/barge movement because they normally reside closer to the shore. Bowhead whales are the only species listed under the Endangered Species Act (ESA) that could potentially be affected by these activities. However, they are not expected to be encountered in more than very small numbers during the planned period of time for the tug/barge movement because the majority of bowhead whales will be on their summer feeding grounds in Canadian waters. A few transitory whales may be encountered during the transits. Beluga whales occur in the Beaufort Sea during the summer, but are expected to be found near the pack ice edge north of the proposed movement route. Depending on seasonal ice conditions, it is possible that belugas may be encountered during the transits.

Based on past surveys, ringed seals should represent the vast majority of marine mammals encountered during the transits. Ringed seals are expected to be present all along the tug/barge transit routes. There is the possibility that bearded and spotted seals will also be harassed during transit. Spotted seals may be present in the West Dock/Prudhoe Bay, but it is likely that they may be closer to shore and therefore are not expected to be harassed during transit phase.

Numbers of Marine Mammals Expected to Be Taken

The number of marine mammals that may be taken as a result of the tug/barging operation is unpredictable. Operations are scheduled to occur prior to the westward migration and associated subsistence bowhead whale hunts to purposely avoid any take of this species. Noise disturbance from vessels might qualify as harassment to seals, but previous surveys have indicated little behavioral reaction from these animals to slow-moving vessels.

Effects on Subsistence Needs

Residents of the village of Barrow are the primary subsistence users in the activity area. The subsistence harvest during winter and spring is primarily ringed seals, but during the open-water period both ringed and bearded seals are taken. Barrow hunters may hunt year round; however in more recent years most of the harvest has been in the summer during open water instead of the more difficult hunting of seals at holes and lairs (McLaren 1958, Nelson 1969). The Barrow fall bowhead whaling grounds, in some years, includes the Cape Simpson and Point Lonely areas (e.g. the 1990 season, when a large aggregation of feeding bowheads were pursued by Barrow hunters).

The most important area for Nuiqsut hunters is off the Colville River Delta in Harrison Bay, between Fish Creek and Pingok Island (149°40′ W). Seal hunting occurs in this area by snow machine before spring break-up and by boat during summer. Subsistence patterns are reflected in harvest data collected in 1992 where Nuiqsut hunters harvested 22 of 24 ringed seals and all 16 bearded seals during the open water season from July to October (Fuller and George, 1997). Harvest data for 1994 and 1995 show 17 of 23 ringed seals were taken from June to August, while there was no record of bearded seals being harvested during these years (Brower and Opie, 1997).

Due to the transient and temporary nature of the barge operation, impacts upon these seals are not expected to have an unmitigable adverse impact on subsistence uses of ringed and bearded seals because: (1) transient operations would temporarily displace relatively few seals; (2) displaced seals would likely move only a short distance and remain in the area for potential harvest by native hunters; (3) studies at the Northstar development found no evidence of the development activities affecting the availability of seals for subsistence hunters; however, the Northstar vicinity is outside the areas used by subsistence hunters (Williams and Moulton, 2001); (4) the area where barge operations would be conducted is small compared to the large Beaufort Sea subsistence hunting area associated with the extremely wide distribution of ringed seals; and (5) the barging, as scheduled, will be completed prior to beginning of the fall westward migration of bowhead whales and the associated subsistence activities by the local whalers.

In order to further minimize any effect of barge operations on the availability of seals for subsistence, the tug boat owners/operators will follow U.S. Coast Guard rules and regulations near coastal water, therefore avoiding hunters and the locations of any seals being hunted in the activity area, whenever possible.

While no impact is anticipated on the availability of marine mammal species and stocks for subsistence uses, FEX is currently discussing its proposed barging plan with the Alaska Eskimo Whaling Commission (AEWC). Meeting schedules are being finalized with the subsistence communities, the AEWC and the Whaling Captains Association. FEX plans an interactive dialogue in the communities and will provide project details and specifications during the meetings. The meetings will be conducted to resolve potential conflicts with either the project operation or the

plan of cooperation. FEX will provide details of those meetings and will provide a copy of the draft Plan of Cooperation to NMFS.

The FEX's activities will comply with an agreed-upon Conflict Avoidance Agreement (CAA) prior to the autumn bowhead hunt by the residents of Kaktovik (Barter Island), Nuiqsut (Cross Island) and Barrow Native villages. Ice, bad weather conditions, and other possible operational considerations may affect the timing of the barge activity and may require that some activities take place beyond the scheduled target dates, but not during the September 1 - October 15 period.

Mitigation

FEX will mitigate any potential negative impacts from its barging operation by planning the timing of operations in such a way as to reduce the production of noise during the fall bowhead whale migration. This includes not operating barges during the time bowheads are migrating and feeding in the western Beaufort Sea (approximately late-August through mid-October). In addition to these mitigation measures, FEX has signed a CAA with the AEWC, North Slope Borough, and other whaling communities in order to eliminate impacts to subsistence hunting of bowheads and, thereby, on bowheads themselves.

Monitoring

During all tug/barging operations, FEX will have on-board at least one professional marine biologist and one experienced Alaska Native marine mammal observer throughout each transit. FEX will conduct a visual monitoring program for assessing impacts to marine mammals during the barge transits. As mentioned, because the Crowley Marine tug/barge unit cannot accommodate observers due to USCG crew berthing restrictions, the marine mammal observers will conduct monitoring from the Bowhead Transportation self-propelled barge. Bowhead flexi-float vessels will be dedicated to the FEX mobilization project until its completion. In route to and from Cape Simpson, the Bowhead barges will travel independent or in tandem with either another Bowhead barge or a Crowley tug, or all three. Because the Crowley tug/barge cannot support observers, all Crowley tug/barge trips under contract to FEX must be conducted in tandem with a Bowhead vessel having two observers onboard.

Observers will conduct visual observations from the barge tugs between West Dock and Cape Simpson. The monitoring program will commence with barges towed from West Dock to Cape Simpson and will continue on nearly 24-hour basis until the rig and support equipment are placed in storage at Cape Simpson and the barges return to West Dock.

When traveling in tandem, a Bowhead vessel will always be in the lead and remain in direct communication with the Crowley tug/barge vessel. The Bowhead and Crowley vessels may travel at a ½ mile distance from each other depending upon the weather, but will follow the same general route inside the barrier islands and remain as close to the shore as possible.

FEX proposes to initiate a comprehensive training program for all potential marine mammal observers that includes learning the identification and behavior of all local species known to use the areas where FEX will be operating. This training would be conducted by professional marine biologists and experienced Native observers participating in the monitoring program. The observer protocol would be to scan the area around vessels with binoculars of sufficient power. Range finding equipment will be supplied to observers in order to better estimate distances. Observers would collect data on the presence, distribution, and behavior of marine mammals relative to FEX activities as well as climatic conditions at the time of marine mammal sightings. Observations would be made on a nearly 24-hour basis.

Reporting

All monitoring data collected would be reported to NMFS on a weekly basis. FEX must provide a final report on 2005 activities to NMFS within 90 days of the completion of the activity. This report will provide dates and locations of all barge movements and other operational activities, weather conditions, dates and locations of any activities related to monitoring the effects on marine mammals, and the methods, results, and interpretation of all monitoring activities, including estimates of the level and type of take, numbers of each species observed, direction of movement of all individuals, and any observed changes or modifications in behavior.

ESA Consultation

The effects of oil and gas exploration activities in the U.S. Beaufort Sea on listed species, which includes the proposed activity, were analyzed as part of a consultation on oil and gas leasing and exploration activities in the Beaufort Sea, Alaska, and authorization of small takes under the MMPA. A biological opinion on these activities was issued on May 25, 2001. The only species listed under the ESA that might be affected during these activities are bowhead whales. The effects of the proposed IHA on bowhead whales has been compared with the analysis contained in the 2001 biological opinion. NMFS has determined that the effects of the current activity are consistent with the findings of that biological opinion, and, accordingly, NMFS has issued an Incidental Take Statement under section 7 of the ESA.

National Environmental Policy Act (NEPA)

On February 5, 1999 (64 FR 5789), the Environmental Protection Agency (EPA) noted the availability of a Final Environmental Impact Statement (Final EIS) prepared by the U.S. Army Corps of Engineers under NEPA on Beaufort Sea oil and gas development at Northstar. NMFS was a cooperating agency on the preparation of the Draft and Final EISs, and subsequently, on May 18, 2000, adopted the Corps' Final EIS as its own document. That Final EIS described impacts to marine mammals from Northstar construction activities, which included vessel traffic similar to the currently proposed action by FEX. Because the barging activity discussed in the Final EIS is not substantially different from the proposed action by FEX, and because no significant new scientific information or analyses have been developed in the past several years significant enough to warrant new NEPA documentation, this action is categorically excluded from further review under NOAA Administrative Order 216–6.

Conclusions

NMFS has determined that the short-term impact of conducting a barging operation between West Dock, Prudhoe Bay and Cape Simpson, in the U.S. Beaufort and associated activities will result, at worst, in a temporary modification in behavior by certain species of whales and pinnipeds. While behavioral modifications may be made by these species to avoid the resultant noise or visual cues from the barging operation, this behavioral change is expected to have a negligible impact on the survival and recruitment of marine mammal stocks.

While the number of potential incidental harassment takes will depend on the year-to-year distribution and abundance of marine mammals in the area of operations, due to the distribution and abundance of marine mammals during the projected period of

activity and the location of the proposed activity, the number of potential harassment takings is estimated to be small. In addition, no take by injury and/or death is anticipated, and there is no potential for temporary or permanent hearing impairment as a result of the activities. No rookeries, mating grounds, areas of concentrated feeding, or other areas of special significance for marine mammals occur within or near the relocation route.

The principal measures undertaken to ensure that the barging operation will not have an adverse impact on subsistence activities is a CAA between FEX, the AEWC and the Whaling Captains Association, a Plan of Cooperation, and an operation schedule that will not permit barging operations during the traditional bowhead whaling season.

Determinations

NMFS has issued an IHA for the harassment of marine mammals incidental to FEX conducting a barging operation for approximately 20 days from West Dock, Prudhoe Bay Alaska, through the U.S. Beaufort Sea to Cape Simpson. This IHA is contingent upon incorporation of the previously mentioned mitigation, monitoring, and reporting requirements. NMFS has determined that this activity would result in the harassment of small numbers of bowhead whales, beluga whales, ringed seals, bearded seals and spotted seals; would have no more than a negligible impact on these marine mammal stocks; and would not have an unmitigable adverse impact on the availability of marine mammal stocks for subsistence since the previously described CAA has been signed.

Authorization

NMFS has issued an IHA to FEX L.P. to take a small number of marine mammals incidental to conducting a barging operation within the U.S. Beaufort Sea, provided the previously mentioned mitigation, monitoring, and reporting requirements are incorporated.

Dated: August 8, 2005.

James H. Lecky,

Director, Office of Protected Resources, National Marine Fisheries Service.

[FR Doc. 05–16060 Filed 8–12–05; 8:45 am]

BILLING CODE 3510–22–S

DEPARTMENT OF COMMERCE

National Oceanic and Atmospheric Administration

[I.D. 072605B]

Endangered Species; File No. 1518

AGENCY: National Marine Fisheries Service (NMFS), National Oceanic and Atmospheric Administration (NOAA), Commerce.

ACTION: Notice; issuance of permit.

SUMMARY: Notice is hereby given that Carlos Diez, Departamento de Recursos Naturales y Ambientales de Puerto Rico, P.O. Box 9066600, San Juan, Puerto Rico 00906–6600, has been issued a permit to take hawksbill (*Eretmochelys imbricata*) and green (*Chelonia mydas*) sea turtles for purposes of scientific research.

ADDRESSES: The permit and related documents are available for review upon written request or by appointment in the following office(s):

Permits, Conservation and Education Division, Office of Protected Resources, NMFS, 1315 East-West Highway, Silver Spring, MD 20910; phone (301)713–2289; fax (301)427–2521; and

Southeast Region, NMFS, 263 13th Avenue South, St. Petersburg, FL 33701; phone (727)824–5312; fax (727)824–5517.

FOR FURTHER INFORMATION CONTACT: Patrick Opay or Ruth Johnson, (301)713–2289.

SUPPLEMENTARY INFORMATION: On May 27, 2005, notice was published in the **Federal Register** (70 FR 30704) that a request for a scientific research permit to take hawksbill and green sea turtles had been submitted by the above-named individual. The requested permit has been issued under the authority of the Endangered Species Act of 1973, as amended (ESA; 16 U.S.C. 1531 *et seq.*) and the regulations governing the taking, importing, and exporting of endangered and threatened species (50 CFR parts 222–226).

Permit No. 1518 authorizes Mr. Diez to study green and hawksbill sea turtles. The purpose of the research is to identify marine habitat, determine distribution and abundance, determine sex ratios, evaluate the extent of ingestion of marine debris, determine growth rates and sexual maturity, and quantify threats. Mr. Diez will annually capture up to 320 hawksbill and 250 green sea turtles by hand or entanglement net. All turtles will be measured, weighed, tagged, and blood sampled. A subset of animals will be lavaged and have transmitters attached to them. One leatherback sea turtle could be incidentally captured during the course of the studies but would be released alive. The permit is issued for 5 years.

Issuance of this permit, as required by the ESA, was based on a finding that such permit (1) was applied for in good faith, (2) will not operate to the disadvantage of any endangered or threatened species, and (3) is consistent with the purposes and policies set forth in section 2 of the ESA.

Dated: August 8, 2005.

Stephen L. Leathery,

Chief, Permits, Conservation and Education Division, Office of Protected Resources, National Marine Fisheries Service.

[FR Doc. 05–16058 Filed 8–12–05; 8:45 am]

BILLING CODE 3510–22–S

DEPARTMENT OF COMMERCE

National Oceanic and Atmospheric Administration

[I.D. 080105B]

Endangered Species; File No. 1540

AGENCY: National Marine Fisheries Service (NMFS), National Oceanic and Atmospheric Administration (NOAA), Commerce.

ACTION: Notice; receipt of application.

SUMMARY: Notice is hereby given that the South Carolina Department of Natural Resources, Marine Resources Division, P.O. Box 12559, Charleston, SC 29422–2559, has applied in due form for a permit to take loggerhead (*Caretta caretta*), Kemp's ridley (*Lepidochelys kempii*), green (*Chelonia mydas*), leatherback (*Dermochelys coriacea*), and hawksbill (*Eretmochelys imbricata*) sea turtles for purposes of scientific research.

DATES: Written, telefaxed, or e-mail comments must be received on or before September 14, 2005.

ADDRESSES: The application and related documents are available for review upon written request or by appointment in the following office(s):

Permits, Conservation and Education Division, Office of Protected Resources, NMFS, 1315 East-West Highway, Silver Spring, MD 20910; phone (301)713–2289; fax (301)427–2521; and

Southeast Region, NMFS, 263 13th Avenue South, St. Petersburg, FL 33701; phone (727)824–5312; fax (727)824–5309.

Written comments or requests for a public hearing on this application should be mailed to the Chief, Permits, Conservation and Education Division, F/PR1, Office of Protected Resources,

NMFS, 1315 East-West Highway, Silver Spring, MD 20910. Those individuals requesting a hearing should set forth the specific reasons why a hearing on this particular request would be appropriate.

Comments may also be submitted by facsimile at (301)427–2521, provided the facsimile is confirmed by hard copy submitted by mail and postmarked no later than the closing date of the comment period.

Comments may also be submitted by e-mail. The mailbox address for providing email comments is *NMFS.Pr1Comments@noaa.gov*. Include in the subject line of the e-mail comment the following document identifier: File No. 1540.

FOR FURTHER INFORMATION CONTACT: Patrick Opay or Ruth Johnson, (301)713–2289.

SUPPLEMENTARY INFORMATION: The subject permit is requested under the authority of the Endangered Species Act of 1973, as amended (ESA; 16 U.S.C. 1531 *et seq.*) and the regulations governing the taking, importing, and exporting of endangered and threatened species (50 CFR 222–226).

The purpose of the proposed action is a continuation of Permit No. 1245 documentation of in-water relative abundances, size distributions, sex ratios, genetic contributions, and the health of sea turtles in coastal waters in the southeastern U.S. Up to 350 loggerhead, 50 Kemp's ridley, 10 green, 3 leatherback, and 5 hawksbill sea turtles would be captured annually using trawls. Turtles would be handled, blood sampled, measured, flipper and PIT tagged, photographed and subsequently released. A subsample of animals would have barnacles and keratin removed from their shells, have cloacal samples taken, be laproscopic and ultrasound examined, and have satellite transmitters attached to them. Up to 4 loggerhead, 1 Kemp's ridley, 1 green, 3 leatherback, and 5 hawksbill sea turtles may be accidentally killed during the research. The permit would be issued for 5 years.

Dated: August 5, 2005.

Jennifer Skidmore,

Acting Chief, Permits, Conservation and Education Division, Office of Protected Resources, National Marine Fisheries Service.

[FR Doc. 05–16059 Filed 8–12–05; 8:45 am]

BILLING CODE 3510–22–S

DEPARTMENT OF COMMERCE

National Oceanic and Atmospheric Administration

[I.D. 072105B]

Endangered Species; File No. 1542

AGENCY: National Marine Fisheries Service (NMFS), National Oceanic and Atmospheric Administration (NOAA), Commerce.

ACTION: Notice; application for permit.

SUMMARY: Notice is hereby given that SCANA Services, Inc. (Stephen E. Summer, Principal Investigator), 6248 Bush River Road, Columbia, SC 29212, has applied in due form for a permit to take shortnose sturgeon (*Acipenser brevirostrum*) for purposes of scientific research.

DATES: Written, telefaxed, or e-mail comments must be received on or before September 14, 2005.

ADDRESSES: The application and related documents are available for review upon written request or by appointment in the following offices:

Permits, Conservation and Education Division, Office of Protected Resources, NMFS, 1315 East-West Highway, Room 13705, Silver Spring, MD 20910; phone (301)713–2289; fax (301)427–2521; and

Southeast Region, NMFS, 263 13th Avenue South, St. Petersburg, FL 33701; phone (727)824–5312; fax (727)824–5309.

Written comments or requests for a public hearing on this application should be mailed to the Chief, Permits, Conservation and Education Division, F/PR1, Office of Protected Resources, NMFS, 1315 East-West Highway, Room 13705, Silver Spring, MD 20910. Those individuals requesting a hearing should set forth the specific reasons why a hearing on this particular request would be appropriate.

Comments may also be submitted by facsimile at (301)427–2521, provided the facsimile is confirmed by hard copy submitted by mail and postmarked no later than the closing date of the comment period.

Comments may also be submitted by e-mail. The mailbox address for providing email comments is *NMFS.Pr1Comments@noaa.gov*. Include in the subject line of the e-mail comment the following document identifier: File No. 1542.

FOR FURTHER INFORMATION CONTACT: Shane Guan or Carrie Hubard, (301)713–2289.

SUPPLEMENTARY INFORMATION: The subject permits are requested under the authority of the Endangered Species Act of 1973, as amended (ESA; 16 U.S.C. 1531 *et seq.*) and the regulations governing the taking, importing, and exporting of endangered and threatened species (50 CFR 222–226).

SCANA Services, Inc., sister company to South Carolina Electric & Gas Company (SCE&G), proposes to conduct a study of shortnose sturgeon in portions of the Santee River Basin in South Carolina (Saluda, Congaree, Broad, Wateree, and Santee Rivers) in support of SCE&G's efforts to acquire a new operating license from the Federal Energy Regulatory Commission (FERC) for the Saluda Hydroelectric Project (FERC No. 516). The purpose of the proposed study is to document shortnose sturgeon usage in areas downstream of the Saluda Hydroelectric Project which are within the historic range of the species, but have not been adequately sampled in recent history. A maximum of 15 adult and juvenile shortnose sturgeon would be captured with gill nets, examined, measured, weighed, PIT and dart tagged, a tissue sample collected for genetic analysis, and released annually. An estimated 100 shortnose sturgeon eggs and larvae would be lethally taken by using D-shaped or rectangular drift nets annually as part of the proposed study to determine if spawning is taking place. The permit is requested for a duration of 5 years, with work slated to begin in January 2006.

Dated: August 4, 2005.

Stephen L. Leathery,

Chief, Permits, Conservation and Education Division, Office of Protected Resources, National Marine Fisheries Service.

[FR Doc. 05–16061 Filed 8–12–05; 8:45 am]

BILLING CODE 3510–22–S

DEPARTMENT OF DEFENSE

Department of the Army; Corps of Engineers

Intent To Prepare a Draft Environmental Impact Statement for the Construction and Operation of an Open Pit Taconite Mine, an Ore Concentrator, a Pellet Plant, a Direct Reduced Iron Plant, a Steel Mill, and a Tailings Basin Proposed by Minnesota Steel Industries, LLC Near Nashwauk in Itasca County, MN

AGENCY: Department of the Army, U.S. Army Corps of Engineers, DoD.

ACTION: Notice of intent.

SUMMARY: Minnesota Steel Industries, LLC (Minnesota Steel) has applied to the St. Paul District, Corps of Engineers (Corps) for a permit to discharge fill

material into wetlands to facilitate the construction and operation of an open pit taconite mine at the former Butler Taconite site near Nashwauk, Minnesota, and the construction of new facilities—a crusher, a concentrator, a pellet plant, a plant for producing direct reduced iron (DRI), and a steel mill consisting of two electric arc furnaces, two idle furnaces, two thin slab casters, and a sheet rolling mill. the former Butler Taconite Stage 1 tailings basin would be reactivated for the disposal of concentrator tailings. The mining process would require the construction of overburden, waste rock, and lean ore stockpiles just north of the proposed mine site. Ore would be hauled via truck from the mine to the adjacent ore concentrator. Concentrating the ore would involve crushing, grinding, magnetic separation, and flotation processes. Concentrator tailings would be pumped as slurry to the former Butler Taconite Stage 1 tailings basin approximately two miles southeast of the proposed mine site. The concentrate would be mixed with a binder and limestone, and converted to unfired pellets in balling drums or disks. The unfired pellets would be hardened in an indurating furnace. The DRI plant would convert the iron oxide pellets to nearly pure iron pellets (DRI pellets) in a 300- to 425-foot-high vertical shaft reactor. The DRI pellets would be fed to steel mill, which would produce hot rolled sheet steel. Project plans call for the mining of approximately 12.8 million long tons of crude ore per year at a stripping ratio of approximately 0.50:1. Approximately 2.4 million short tons per year of hot rolled sheet steel would be produced. The project would employ approximately 700 people for production, support, and administration. Economic feasibility of the project is based on a 20-year project life. Minnesota Steel at this time cannot predict whether investments for further operations would be economically desirable. Therefore, mine planning and detailed design are being prepared for 20 years of operation and environmental permits are being requested for a 20-year project life. If the project is permitted, and if Minnesota Steel proposes to extend the project life beyond the 20-year period, then modifications to the Section 404 permit and supplemental environmental review would be required.

The project would require dredging or discharging fill material into approximately 1,014 acres of wetlands. While some of the wetlands may be isolated, the majority of the wetlands are adjacent to Oxhide Creek, Snowball Creek, Pickerel Creek, or O'Brien Creek, which are tributaries to the Swan River, or they are adjacent to an unnamed tributary to the Prairie River or to an unnamed tributary to Sucker Brook, which is a tributary to the Prairie River. The Swan River and the Prairie River are tributaries to the Mississippi River, which is a navigable water of the United States. A specific compensatory wetland mitigation plan has not been developed for the project. Minnesota Steel intends to work with interested Federal and state agencies to develop an acceptable plan that would meet Federal and state compensatory mitigation requirements. The discharge of dredged or fill material into waters of the United States requires a permit issued by the Corps under Section 404 of the Clean Water Act. The final environmental impact statement will be used as a basis for the permit decision and to ensure compliance with the National Environmental Policy Act (NEPA).

FOR FURTHER INFORMATION CONTACT: Questions concerning the Draft Environmental Impact Statement (DEIS) can be addressed to Mr. Jon K. Ahlness, Regulatory Branch by letter at U.S. Army Corps of Engineers, 190 Fifth Street East, St. Paul, MN 55101–1638, by telephone at (651) 290–5381, or by e-mail at *jon.k.ahlness@mvp02.usace.army.mil*.

SUPPLEMENTARY INFORMATION: The Corps and the State of Minnesota will jointly prepare the DEIS. The Corps is the lead federal agency and the Minnesota Department of Natural Resources (MnDNR) is the lead state agency. The Corps and the MnDNR will prepare and release to the public a Scoping Environmental Assessment Worksheet (EAW) and a Draft Scoping Decision Document. The public will have 30 days to provide comments on those two documents. The Corps and the MnDNR will conduct a public scoping meeting in Nashwauk, Minnesota during the 30-day public comment period. A notice will be published or aired in local media once the meeting has been scheduled. Additional meetings will be conducted as needed. In accordance with 40 CFR 1506.5(c) and Corps policy, a third party contractor will be selected to prepare the DEIS. We anticipate that the DEIS will be available to the public in late 2006.

The DEIS will assess impacts of the proposed action and reasonable alternatives, identify and evaluate mitigation alternatives, and discuss potential environmental monitoring. Significant issues and resources to be identified in the DEIS will be determined through coordination with responsible Federal, state, and local agencies; the general public; interested private organizations and parties; and affected Native American Tribes. Anyone who has an interest in participating in the development of the DEIS is invited to contact the St. Paul District, Corps of Engineers. Major issues identified to date for discussion in the DEIS are the impacts of the projected project on:

1. Natural resources including: fishery, wildlife, vegetation, riparian areas, and waters of the U.S., including wetlands.
2. Water quality, water quantity, groundwater, erosion, and sedimentation.
3. Air quality.
4. Social and economic resources.
5. Downstream resources.

Additional issues of interest may be identified through the public scoping meeting and agency meetings.

Issuing a permit for the development of an open pit taconite mine and associated ore processing, steel making, and tailings facilities is considered to be a major Federal action having a significant impact on the quality of the human environment. The project: (1) Would have a significant adverse effect on wetlands (which are special aquatic sites), and (2) has the potential to significantly affect air quality, water quality, groundwater, plankton, fish, and wildlife. Our environmental review will be conducted to the requirements of the National Environmental Policy Act of 1969, National Historic Preservation Act of 1966, Council of Environmental Quality Regulations, Endangered Species Act of 1973, Section 404 of the Clean Water Act, and other applicable laws and regulations.

Dated: August 5, 2005.

Michael F. Pfenning,

Colonel, Corps of Engineers, District Engineer.

[FR Doc. 05–16109 Filed 8–12–05; 8:45 am]

BILLING CODE 3710–CY–M

DEPARTMENT OF EDUCATION

Submission for OMB Review; Comment Request

AGENCY: Department of Education.

SUMMARY: The Leader, Information Management Case Services Team, Regulatory Information Management Services, Office of the Chief Information Officer invites comments on the submission for OMB review as required by the Paperwork Reduction Act of 1995.

DATES: Interested persons are invited to submit comments on or before September 14, 2005.

ADDRESSES: Written comments should be addressed to the Office of Information and Regulatory Affairs, Attention: Rachel Potter, Desk Officer, Department of Education, Office of Management and Budget, 725 17th Street, NW., Room 10235, New Executive Office Building, Washington, DC 20503 or faxed to (202) 395–6974.

SUPPLEMENTARY INFORMATION: Section 3506 of the Paperwork Reduction Act of 1995 (44 U.S.C. Chapter 35) requires that the Office of Management and Budget (OMB) provide interested Federal agencies and the public an early opportunity to comment on information collection requests. OMB may amend or waive the requirement for public consultation to the extent that public participation in the approval process would defeat the purpose of the information collection, violate State or Federal law, or substantially interfere with any agency's ability to perform its statutory obligations. The Leader, Information Management Case Services Team, Regulatory Information Management Services, Office of the Chief Information Officer, publishes that notice containing proposed information collection requests prior to submission of these requests to OMB. Each proposed information collection, grouped by office, contains the following: (1) Type of review requested, *e.g.* new, revision, extension, existing or reinstatement; (2) Title; (3) Summary of the collection; (4) Description of the need for, and proposed use of, the information; (5) Respondents and frequency of collection; and (6) Reporting and/or Recordkeeping burden. OMB invites public comment.

Dated: August 10, 2005.

Angela C. Arrington,

Leader, Information Management Case Services Team, Regulatory Information Management Services, Office of the Chief Information Officer.

Office of Vocational and Adult Education

Type of Review: Reinstatement.

Title: Adult Education Annual Performance and Financial Reports.

Frequency: Annually.

Affected Public: State, local, or tribal gov't, SEAs or LEAs.

Reporting and Recordkeeping Hour Burden: Responses: 57. Burden Hours: 5,700.

Abstract: The information contained in the Annual Performance Reports for Adult Education is needed to monitor the performance of the activities and services funded under the Adult Education and Family Literacy Act of 1998, Report to Congress on the Levels of Performance Achieved on the core indicators of performance, provide necessary outcome information to meet OVAE's Government Performance and Results Act (GPRA) goals for adult education, and provide documentation for incentive awards under Title V of the Workforce Investment Act. The respondents include eligible agencies in 59 states and insular areas.

Requests for copies of the information collection submission for OMB review may be accessed from *http://edicsweb.ed.gov,* by selecting the ''Browse Pending Collections'' link and by clicking on link number 2794. When you access the information collection, click on ''Download Attachments ''to view. Written requests for information should be addressed to U.S. Department of Education, 400 Maryland Avenue, SW., Potomac Center, 9th Floor, Washington, DC 20202–4700. Requests may also be electronically mailed to the Internet address *OCIO_RIMG@ed.gov* or faxed to 202–245–6623. Please specify the complete title of the information collection when making your request.

Comments regarding burden and/or the collection activity requirements should be directed to Sheila Carey at her e-mail address *Sheila.Carey@ed.gov.* Individuals who use a telecommunications device for the deaf (TDD) may call the Federal Information Relay Service (FIRS) at 1–800–877–8339.

[FR Doc. 05–16100 Filed 8–12–05; 8:45 am]

BILLING CODE 4000–01–P

DEPARTMENT OF EDUCATION

Office of Elementary and Secondary Education; Overview Information, Striving Readers; Notice Inviting Applications for New Awards for Fiscal Year (FY) 2005

Catalog of Federal Domestic Assistance (CFDA) Number: 84.371A

Dates:

Applications Available: August 15, 2005.

Deadline for Notice of Intent to Apply: September 14, 2005.

Deadline for Transmittal of Applications: November 14, 2005.

Deadline for Intergovernmental Review: December 13, 2005.

Dates of Pre-Application Meetings: The Department will conduct a series of briefings on this competition via conference call to clarify the purposes of the program, the selection criteria, and the competition process. Consult the Striving Readers Web site at *http://www.ed.gov/programs/strivingreaders* for dates and times of the pre-application meetings.

Eligible Applicants: Local educational agencies (LEAs) that have schools that—

1. Are eligible to receive funds under Part A of Title I of the Elementary and Secondary Education Act of 1965, as amended (ESEA), pursuant to section 1113 of the ESEA, and

2. Serve students in one or more grades in grades 6 through 12.

Eligible LEAs may apply individually, with other eligible LEAs, or in partnership with one or more of the following entities:

- State educational agencies (SEAs),
- Intermediate service agencies,
- Public or private institutions of higher education, and
- Public or private organizations with expertise in adolescent literacy and/or rigorous evaluation.

In any partnership, the fiscal agent must be an eligible LEA.

Estimated Available Funds: $24,000,000. Contingent upon the availability of funds and quality of applications we may make additional awards in subsequent years from the list of unfunded applicants from this competition.

Estimated Range of Awards: $1,000,000–5,000,000 per year.

Estimated Average Size of Awards: $3,000,000 per year.

Maximum Award Amount: We do not intend to make any awards exceeding $5,000,000 per year.

Estimated Number of Awards: 8.

Note: The Department is not bound by any estimates in this notice.

Project Period: Up to 60 months. Continuation awards are contingent on a grantee's progress and future Congressional appropriations.

Full Text of Announcement

I. Funding Opportunity Description

Purpose of Program: The purpose of the Striving Readers program is to raise the reading achievement levels of middle and high school-aged students in Title I-eligible schools with significant numbers of students reading below grade level. The program supports new comprehensive reading initiatives or expansion of existing initiatives that improve the quality of literacy instruction across the curriculum, provide intensive literacy interventions to struggling adolescent readers, and help to build a strong, scientific research base for identifying and replicating strategies that improve adolescent literacy skills.

Priorities: We are establishing these priorities in accordance with section

437(d)(1) of the General Education Provisions Act.

Absolute Priorities: For FY 2005 and any subsequent year in which we make awards based on the list of unfunded applicants from this competition, these priorities are absolute priorities. Under 34 CFR 75.105(c)(3) we consider only applications that meet these priorities.

These priorities are: Priority One—Students in Grades 6 through 12 in Title I-eligible schools; and Priority Two—Comprehensive Reading Initiative Components.

Background of Priority One

The first absolute priority is established to ensure that the funds will be targeted as intended by the authorizing statute.

Statement of Priority One—Students in Grades 6 Through 12 in Title I-Eligible Schools

The applicant, if awarded a grant under this program, will use the funds to serve only students in one or more grades in grades 6 through 12 in schools eligible to receive funds under Part A of Title I of the ESEA.

Background of Priority Two

The second absolute priority is established to ensure that Striving Readers projects will result in accelerated reading achievement for adolescents reading significantly below grade level, including limited English proficient students and students with disabilities. This absolute priority is also established to ensure that the evaluations of Striving Readers projects include rigorous scientifically based research methods and that the evaluations are of sufficient quality to determine the effectiveness of the interventions provided.

The experimental evaluation design of the targeted intervention must include a randomized controlled trial ''an experimental design in which participants (*e.g.*, schools or students) are randomly assigned either to participate in the project activities or to a control group that does not participate in the project activities to be evaluated.

Well-designed and implemented randomized control trials are considered the ''gold standard'' for evaluating an intervention's effectiveness. They enable the evaluator to determine whether the intervention itself, as opposed to other factors, causes the observed outcomes.

The Institute for Educational Sciences' (IES) What Works Clearinghouse supports a Help Desk that applicants can contact to help identify interventions and design evaluations that meet IES evidence standards. For more information see: *http://www.whatworks.ed.gov.*

Statement of Priority Two—Comprehensive Reading Initiative Components

The applicant, if awarded a grant under this program, will use the funds to support a comprehensive reading initiative that includes the following components:

1. School-level strategies designed to increase reading achievement for students by integrating enhanced literacy instruction throughout the curriculum and the entire school. These strategies must include, at a minimum, a needs assessment, professional development, and a process for monitoring student performance.

2. An intensive, targeted intervention for struggling readers (*i.e.*, students who read at least two years below grade level, including limited English proficient students and students with disabilities). The intervention must include, at a minimum, assessments to identify struggling readers, a supplementary literacy intervention designed to accelerate the development of literacy skills for these readers, professional development for their teachers, and a process for monitoring student progress that includes the administration of student assessments.

3. A project evaluation that includes—

(a) A rigorous experimental research evaluation of the intensive, targeted intervention for struggling readers. The evaluation of the intensive, targeted intervention must be conducted by an independent evaluator and must include a randomized control trial; *and*

(b) A rigorous evaluation of the school-level strategies designed to increase reading achievement for students by integrating enhanced literacy instruction throughout the curriculum and the school. The evaluation of the school-level strategies must be conducted by an independent evaluator and may, but need not, include a randomized control trial.

To meet this priority, applicants must demonstrate that they have allocated sufficient program and other funds to carry out a high-quality evaluation of the proposed Striving Readers project. Applicants also will need to include a sufficient number of schools and students to support an experimental evaluation design of the targeted intervention.

Other Program Requirements

1. *Funding Allocation:* The Secretary may fund projects out of rank order in order to ensure that the Striving Readers funding is balanced between projects serving middle and high school students.

2. *Literacy Study Participants:* Applicants may not apply for Striving Readers funds on behalf of, or use Striving Readers funds in, schools participating in the current Smaller Learning Communities Enhanced Reading Opportunities (ERO) Study, a U.S. Department of Education funded national research evaluation of supplemental adolescent literacy programs.

3. *Implementation Schedule:* The 2006–2007 school year will be considered the first year for full Striving Readers project implementation. A grantee may use that portion of the 2005–2006 school year that remains after it receives its award as a planning period to prepare for the full implementation of its Striving Readers project during the following school year and to complete the design of Striving Readers project evaluation. The Department will provide technical assistance on evaluation plans during the planning period and throughout the project period.

4. *Project Meetings:* Each applicant must budget for—

(a) The project director, the project evaluator, and up to two other key staff members to attend a two-day technical assistance meeting with Department officials in Washington, DC at least twice a year for each year of the project period; and

(b) The project director and the evaluator to attend a two-day post-award conference with Department officials in Washington, DC after the grant award date.

Waiver of Proposed Rulemaking: Under the Administrative Procedure Act (APA) (5 U.S.C. 553), the Department generally offers interested parties the opportunity to comment on proposed priorities, eligibility requirements, and other non-statutory program requirements. Section 437(d)(1) of the General Education Provisions Act (20 U.S.C. 1232(d)(1)), however, allows the Secretary to exempt from rulemaking requirements, regulations governing the first grant competition under a new or substantially revised program authority. This is the first grant competition for this program under section 1502 of the ESEA and, therefore, qualifies for this exemption. In order to ensure timely grant awards, the Secretary has decided to forego public comment on the absolute priorities, eligibility requirements, and non-statutory program requirements under section 437(d)(1). These absolute priorities,

eligibility requirements and non-statutory program requirements will apply to the FY 2005 grant competition and any subsequent awards we make based on the list of unfunded applications from this competition.

Program Authority: 20 U.S.C. 6492.

Applicable Regulations: The Education Department General Administrative Regulations (EDGAR) in 34 CFR parts 74, 75, 77, 79, 80, 81, 82, 84, 85, 86, 97, 98, and 99, as applicable.

Note: The regulations in 34 CFR part 79 apply to all applicants except federally recognized tribes.

Note: The regulations in 34 CFR part 86 apply to institutions of higher education only.

II. Award Information

Type of Award: Cooperative agreement.

Estimated Available Funds: $24,000,000. Contingent upon the availability of funds and quality of applications we may make additional awards in subsequent years from the list of unfunded applicants from this competition.

Estimated Range of Awards: $1,000,000–5,000,000 per year.

Estimated Average Size of Awards: $3,000,000 per year.

Maximum Award Amount: We do not intend to make any awards exceeding $5,000,000 per year.

Estimated Number of Awards: 8.

Note: The Department is not bound by any estimates in this notice.

Project Period: Up to 60 months. Continuation awards are contingent on a grantee's progress and future Congressional appropriations.

III. Eligibility Information

1. *Eligible Applicants:* LEAs that have schools that—

a. Are eligible to receive funds under Part A of Title I of the ESEA, pursuant to section 1113 of the ESEA, *and*

b. Serve students in one or more grades in grades 6 through 12.

Eligible LEAs may apply individually, with other eligible LEAs, or in partnership with one or more of the following entities:

○ SEAs,

○ Intermediate service agencies,

○ Public or private institutions of higher education, and

○ Public or private organizations with expertise in adolescent literacy and/or rigorous evaluation.

In any partnership, the fiscal agent must be an eligible LEA.

Note: For more information on determining Title I eligibility see: *http://www.ed.gov/programs/titleiparta/wdag.doc.*

2. *Cost Sharing or Matching:* This program does not involve cost sharing or matching.

IV. Application and Submission Information

1. *Address to Request Application Package:* You may obtain the application package electronically by downloading it from the Striving Readers Web site: *http://www.ed.gov/programs/strivingreaders/applicant.html.*

You may also request an application package by contacting the Striving Readers program contact person listed in section VII of this notice at (202) 205–6272 or by e-mail at *StrivingReaders@ed.gov.*

Individuals with disabilities may obtain a copy of the application package in an alternative format (*e.g.*, Braille, large print, audiotape, or computer diskette) by contacting the program contact person listed in section VII of this notice.

2. *Content and Form of Application Submission:* Requirements concerning the content of the application, together with the forms you must submit, are in the application package for this program.

Page Limits: The application narrative for this program (Part II of the application) is where you, the applicant, address the selection criteria that reviewers use to evaluate your application. We strongly encourage applicants to limit Part II of the application to the equivalent of no more than 60 pages. Part III of the application is where you, the applicant, provide a budget narrative that reviewers use to evaluate your application. We strongly encourage you to limit the budget narrative in Part III to the equivalent of no more than five pages. Part IV of the application is where you, the applicant, provide the list and a brief description of the schools included in the proposed Striving Readers project, up to five resumes (curriculum vitae), and the demonstration of stakeholder support for the project that reviewers use to evaluate your application. The Department strongly encourages applicants to limit the list and the brief description of the schools to the equivalent of no more than 10 pages. The Department also strongly encourages applicants to limit each resume to the equivalent of no more than three pages each and limit the demonstration of stakeholder support for the project to the equivalent of no more than 10 pages. While the Department strongly encourages applicants to follow page limit recommendations, applications that exceed these limits will not be excluded from the competition. For all page limit recommendations, use the following standards:

- A ''page'' is 8.5″ x 11″, on one side only, with 1″ margins at the top, bottom, and both sides.
- Double space (no more than three lines per vertical inch) all text in the application narrative, including titles, headings, footnotes, quotations, and references included in the body of the narrative.
- Text in endnotes, charts, tables, figures, and graphs may be single-spaced.
- Use a font that is either 12 point or larger or no smaller than 10 pitch (characters per inch), including text in endnotes, charts, tables, figures, and graphs.
- The page limits do not apply to Part I, the cover sheet and the one-page abstract; the budget (ED Form 524); or the endnotes.

3. *Submission Dates and Times:*

Applications Available: August 15, 2005.

Deadline for Notice of Intent to Apply: September 14, 2005.

In order to expedite the process for reviewing grant applications, we strongly encourage each potential applicant to send a notice of its intent to apply for funding to the following address: *StrivingReaders@ed.gov.* The notice of intent to apply is optional and should not include information regarding the proposed application.

Dates of Pre-Application Meetings: The Department will conduct a series of briefings on this competition via conference call to clarify the purposes of the program, the selection criteria, and the competition process. Consult the Striving Readers Web site at *http://www.ed.gov/programs/strivingreaders* for dates and times of the pre-application meetings.

Deadline for Transmittal of Applications: November 14, 2005.

Applications for grants under this program must be submitted electronically using the Electronic Grant Application System (e-Application) available through the Department's e-Grants system. For information (including dates and times) about how to submit your application electronically or by mail or hand delivery if you qualify for an exception to the electronic submission requirement, please refer to section IV.

6. *Other Submission Requirements* in this notice.

Deadline for Intergovernmental Review: December 13, 2005.

We do not consider an application that does not comply with the deadline for transmittal of applications.

4. *Intergovernmental Review:* This program is subject to Executive Order 12372 and the regulations in 34 CFR part 79. Information about Intergovernmental Review of Federal Programs under Executive Order 12372 is in the application package for this program.

5. *Funding Restrictions:* We reference regulations outlining funding restrictions in the *Applicable Regulations* section of this notice.

6. *Other Submission Requirements:* Applications for grants under this program must be submitted electronically, unless you qualify for an exception to this requirement in accordance with the instructions in this section.

We will reject your application if you submit it in paper format unless, as described elsewhere in this section, you qualify for one of the exceptions to the electronic submission requirement and submit, no later than two weeks before the application deadline date, a written statement to the Department that you qualify for one of these exceptions. Further information regarding calculation of the date that is two weeks before the application deadline date is provided later in this section under *Exception to Electronic Submission Requirement*.

a. *Electronic Submission of Applications*.

Applications for grants under the Striving Readers program—CFDA Number 84.371A must be submitted electronically using e-Application available through the Department's e-Grants system, accessible through the e-Grants portal page at: *http://e-grants.ed.gov*.

While completing your electronic application, you will be entering data online that will be saved into a database. You may not e-mail an electronic copy of a grant application to us.

Please note the following:

• You must complete the electronic submission of your grant application by 4:30 p.m., Washington, DC time, on the application deadline date. The e-Application system will not accept an application for this program after 4:30 p.m., Washington, DC time, on the application deadline date. Therefore, we strongly recommend that you do not wait until the application deadline date to begin the application process.

• The regular hours of operation of the e-Grants Web site are 6 a.m. Monday until 7 p.m. Wednesday; and 6 a.m. Thursday until midnight Saturday, Washington, DC time. Please note that the system is unavailable on Sundays, and between 7 p.m. on Wednesdays and 6 a.m. on Thursdays, Washington, DC time, for maintenance. Any modifications to these hours are posted on the e-Grants Web site.

• You will not receive additional point value because you submit your application in electronic format, nor will we penalize you if you qualify for an exception to the electronic submission requirement, as described elsewhere in this section, and submit your application in paper format.

• You must submit all documents electronically, including the Application for Federal Education Assistance (ED 424), Budget Information—Non-Construction Programs (ED 524), and all necessary assurances and certifications.

• Any narrative sections of your application must be attached as files in a .DOC (document), .RTF (rich text), or .PDF (Portable Document) format.

■ Your electronic application must comply with any page limit requirements described in this notice.

• Prior to submitting your electronic application, you may wish to print a copy of it for your records.

• After you electronically submit your application, you will receive an automatic acknowledgement that will include a PR/Award number (an identifying number unique to your application).

• Within three working days after submitting your electronic application, fax a signed copy of the ED 424 to the Application Control Center after following these steps:

(1) Print ED 424 from e-Application.

(2) The applicant's Authorizing Representative must sign this form.

(3) Place the PR/Award number in the upper right hand corner of the hard-copy signature page of the ED 424.

(4) Fax the signed ED 424 to the Application Control Center at (202) 245–6272.

• We may request that you provide us original signatures on other forms at a later date.

Application Deadline Date Extension in Case of e-Application System Unavailability: If you are prevented from electronically submitting your application on the application deadline date because the e-Application system is unavailable, we will grant you an extension of one business day in order to transmit your application electronically, by mail, or by hand delivery. We will grant this extension if—

(1) You are a registered user of e-Application and you have initiated an electronic application for this competition; and

(2)(a) The e-Application system is unavailable for 60 minutes or more between the hours of 8:30 a.m. and 3:30 p.m., Washington, DC time, on the application deadline date; or

(b) The e-Application system is unavailable for any period of time between 3:30 p.m. and 4:30 p.m., Washington, DC time, on the application deadline date.

We must acknowledge and confirm these periods of unavailability before granting you an extension. To request this extension or to confirm our acknowledgement of any system unavailability, you may contact either (1) the person listed elsewhere in this notice under **FOR FURTHER INFORMATION CONTACT** (see VII. Agency Contact) or (2) the e-Grants help desk at 1–888–336–8930. If the system is down and therefore the application deadline is extended, an e-mail will be sent to all registered users who have initiated an e-Application. Extensions referred to in this section apply only to the unavailability of the Department's e-Application system.

Exception to Electronic Submission Requirement: You qualify for an exception to the electronic submission requirement, and may submit your application in paper format, if you are unable to submit an application through the e-Application system because—

• You do not have access to the Internet; or

• You do not have the capacity to upload large documents to the Department's e-Application system; and

• No later than two weeks before the application deadline date (14 calendar days or, if the fourteenth calendar day before the application deadline date falls on a Federal holiday, the next business day following the Federal holiday), you mail or fax a written statement to the Department, explaining which of the two grounds for an exception prevent you from using the Internet to submit your application. If you mail your written statement to the Department, it must be postmarked no later than two weeks before the application deadline date. If you fax your written statement to the Department, we must receive the faxed statement no later than two weeks before the application deadline date.

Address and mail or fax your statement to: Kathryn Doherty, U.S. Department of Education, 400 Maryland Avenue, SW., Room 3W309, Washington, DC 20202–6132. FAX: (202) 205–0303.

Your paper application must be submitted in accordance with the mail

or hand delivery instructions described in this notice.

b. *Submission of Paper Applications by Mail.*

If you qualify for an exception to the electronic submission requirement, you may mail (through the U.S. Postal Service or a commercial carrier) your application to the Department. You must mail the original and two copies of your application, on or before the application deadline date, to the Department at the applicable following address:

By mail through the U.S. Postal Service: U.S. Department of Education, Application Control Center, Attention: (CFDA Number 84.371A), 400 Maryland Avenue, SW., Washington, DC 20202–4260; or

By mail through a commercial carrier: U.S. Department of Education, Application Control Center—Stop 4260, Attention: (CFDA Number 84.371A), 7100 Old Landover Road, Landover, MD 20785–1506.

Regardless of which address you use, you must show proof of mailing consisting of one of the following:

(1) A legibly dated U.S. Postal Service postmark,

(2) A legible mail receipt with the date of mailing stamped by the U.S. Postal Service,

(3) A dated shipping label, invoice, or receipt from a commercial carrier, or

(4) Any other proof of mailing acceptable to the Secretary of the U.S. Department of Education.

If you mail your application through the U.S. Postal Service, we do not accept either of the following as proof of mailing:

(1) A private metered postmark, or

(2) A mail receipt that is not dated by the U.S. Postal Service.

If your application is postmarked after the application deadline date, we will not consider your application.

Note: The U.S. Postal Service does not uniformly provide a dated postmark. Before relying on this method, you should check with your local post office.

c. *Submission of Paper Applications by Hand Delivery.*

If you qualify for an exception to the electronic submission requirement, you (or a courier service) may deliver your paper application to the Department by hand. You must deliver the original and two copies of your application, by hand, on or before the application deadline date, to the Department at the following address: U.S. Department of Education, Application Control Center, Attention: (Number 84.371A), 550 12th Street, SW., Room 7041, Potomac Center Plaza, Washington, DC 20202–4260.

The Application Control Center accepts hand deliveries daily between 8 a.m. and 4:30 p.m., Washington, DC time, except Saturdays, Sundays, and Federal holidays.

Note for Mail or Hand Delivery of Paper Applications: If you mail or hand deliver your application to the Department:

(1) You must indicate on the envelope and—if not provided by the Department—in Item 4 of the ED 424 the CFDA number—and suffix letter, if any—of the competition under which you are submitting your application.

(2) The Application Control Center will mail a grant application receipt acknowledgment to you. If you do not receive the grant application receipt acknowledgment within 15 business days from the application deadline date, you should call the U.S. Department of Education Application Control Center at (202) 245–6288.

V. Application Review Information

Selection Criteria

The selection criteria for this program are from 34 CFR 75.210 of EDGAR and are as follows. Further information about each of these selection criteria is in the application package. The maximum score for each criterion is listed in parentheses next to the title of the criterion.

(i) *Need for project.* (5 points) The Secretary considers the need for the proposed project. In determining the need for the proposed project, the Secretary considers the following factors:

(a) The magnitude of the need for the services to be provided or the activities to be carried out by the proposed project. (34 CFR 75.210(a)(2)(ii))

(b) The extent to which the proposed project will provide services or otherwise address the needs of students at risk of educational failure. (34 CFR 75.210(a)(2)(iii))

(ii) *Quality of the project design.* (40 points) The Secretary considers the quality of the design of the proposed project. In determining the quality of the design of the proposed project, the Secretary considers the following factors:

(a) The extent to which the design of the proposed project is appropriate to, and will successfully address, the needs of the target population or other identified needs. (34 CFR 75.210(c)(2)(ii))

(b) The extent to which the proposed project is based upon a specific research design, and the quality and appropriateness of that design, including the scientific rigor of the studies involved. (34 CFR 75.210(c)(2)(vi))

(c) The extent to which the design of the proposed project reflects up-to-date knowledge from research and effective practice. (34 CFR 75.210(c)(2)(xiii))

(iii) *Quality of project personnel.* (10 points) The Secretary considers the quality of the personnel who will carry out the proposed project. In determining the quality of project personnel, the Secretary considers the extent to which the applicant encourages applications for employment from persons who are members of groups that have traditionally been underrepresented based on race, color, national origin, gender, age, or disability. (34 CFR 75.210(e)(1), (2))

In addition, the Secretary considers the following factors:

(a) The qualifications, including relevant training and experience, of the project director. (34 CFR 75.210(e)(3)(i))

(b) The qualifications, including relevant training and experience of key project personnel. (34 CFR 75.210(e)(3)(ii)).

(c) The qualifications, including relevant training and experience, of project consultants or subcontractors. (34 CFR 75.210(e)(3)(iii))

(iv) *Adequacy of resources.* (5 points) The Secretary considers the adequacy of resources for the proposed project. In determining the adequacy of resources for the proposed project, the Secretary considers the following factors:

(a) The relevance and demonstrated commitment of each partner in the proposed project to the implementation and success of the project. (34 CFR 75.210(f)(2)(ii))

(b) The extent to which the costs are reasonable in relation to the objectives, design, and potential significance of the proposed project. (34 CFR 75.210(f)(2)(iv))

(v) *Quality of the management plan.* (5 points) The Secretary considers the quality of the management plan for the proposed project. In determining the quality of the management plan for the proposed project, the Secretary considers the following factors:

(a) The adequacy of the management plan to achieve the objectives of the proposed project on time and within budget, including clearly defined responsibilities, timelines, and milestones for accomplishing project tasks. (34 CFR 75.210(g)(2)(i))

(b) The extent to which the time commitments of the project director and other key project personnel are appropriate and adequate to meet the objectives of the proposed project. (34 CFR 75.210(g)(2)(iv))

(vi) *Quality of the project evaluation.* (30 points) The Secretary considers the quality of the evaluation to be conducted of the proposed project. In determining the quality of the evaluation of the proposed project, the Secretary considers the following factors:

(a) The extent to which the methods of evaluation are thorough, feasible, and appropriate to the goals, objectives, and outcomes of the proposed project. (34 CFR 75.210(h)(2)(i))

(b) The extent to which the methods of evaluation provide for examining the effectiveness of project outcomes and implementation strategies. (34 CFR 75.210(h)(2)(iii))

(c) The extent to which the evaluation will provide guidance about effective strategies suitable for replication or testing in other settings. (34 CFR 75.210(h)(2)(vii))

(vii) *Significance.* (5 points) The Secretary considers the significance of the proposed project. In determining the significance of the proposed project, the Secretary considers the following factor:

(a) The potential contribution of the proposed project to the development and advancement of theory, knowledge, and practices in the field of study. (34 CFR 75.210(b)(2)(vi))

VI. Award Administration Information

1. *Award Notices:* If your application is successful, we notify you in writing and post the list of successful applicants on the Striving Readers Web site at *http://www.ed.gov/programs/strivingreaders/applicant.html.* If your application is successful, we also notify your U.S. Representative and U.S. Senators and send you a Grant Award Notification (GAN). We may also notify you informally.

If your application is not evaluated or not selected for funding, we notify you.

2. *Administrative and National Policy Requirements:* We identify administrative and national policy requirements in the application package and reference these and other requirements in the *Applicable Regulations* section of this notice.

We reference the regulations outlining the terms and conditions of an award in the *Applicable Regulations* section of this notice and include these and other specific conditions in the GAN. The GAN also incorporates your approved application as part of your binding commitments under the grant.

3. *Reporting:* At the end of your project period, you must submit a final performance report, including financial information, as directed by the Secretary. If you receive a multi-year award, you must submit an annual performance report that provides the most current performance and financial expenditure information as specified by the Secretary in 34 CFR 75.118.

4. *Performance Measures:* Under the Government Performance and Results Act of 1993 (GPRA), the Secretary has established the following two measures for evaluating the overall effectiveness of the Striving Readers program: (1) The percentage of adolescent students reading significantly below grade level who demonstrate a gain in their reading achievement, at a minimum of one grade level or its equivalent after participating in an intensive intervention over an academic year; and (2) the percentage of schools participating in the Striving Readers intervention that demonstrate performance gains on their State's assessment of reading or language arts achievement.

We will expect all grantees to document their success in addressing these performance measures in the annual performance report referred to in section VI.3. of this notice.

VII. Agency Contact

FOR FURTHER INFORMATION CONTACT: Kathryn Doherty, U.S. Department of Education, 400 Maryland Avenue, SW., Room 3W309, Washington, DC 20202–6132. Telephone: (202) 205–6272 or by e-mail: *StrivingReaders@ed.gov.*

If you use a telecommunications device for the deaf (TDD), you may call the Federal Relay Service (FRS) at 1–800–877–8339.

Individuals with disabilities may obtain this document in an alternative format (*e.g.*, Braille, large print, audiotape, or computer diskette) on request to the program contact person listed in this section.

VIII. Other Information

Electronic Access to This Document: You may view this document, as well as all other documents of this Department published in the **Federal Register**, in text or Adobe Portable Document Format (PDF) on the Internet at the following site: *http://www.ed.gov/news/fedregister.*

To use PDF you must have Adobe Acrobat Reader, which is available free at this site. If you have questions about using PDF, call the U.S. Government Printing Office (GPO), toll free, at 1–888–293–6498; or in the Washington, DC, area at (202) 512–1530.

Note: The official version of this document is the document published in the **Federal Register**. Free Internet access to the official edition of the **Federal Register** and the Code of Federal Regulations is available on GPO Access at: *http://www.gpoaccess.gov/nara/index.html.*

Dated: August 10, 2005.

Raymond Simon,

Deputy Secretary.

[FR Doc. 05–16135 Filed 8–12–05; 8:45 am]

BILLING CODE 4000–01–P

DEPARTMENT OF EDUCATION

Advisory Committee on Student Financial Assistance: Hearing

AGENCY: Advisory Committee on Student Financial Assistance, Education.

ACTION: Notice of upcoming symposium.

SUMMARY: This notice sets forth the schedule and proposed agenda of a forthcoming hearing of the Advisory Committee on Student Financial Assistance. Individuals who will need accommodations for a disability in order to attend the hearing (*i.e.* interpreting services, assistive listening devices, and/or materials in alternative format) should notify the Advisory Committee no later than Wednesday, August 31, 2005 by contacting Ms. Hope Gray at (202) 219–2099 or via e-mail at *Hope.Gray@ed.gov.* We will attempt to meet requests after this date, but cannot guarantee availability of the requested accommodation. The symposium site is accessible to individuals with disabilities. This notice also describes the functions of the Advisory Committee. Notice of this hearing is required under Section 10(a)(2) of the Federal Advisory Committee Act. This document is intended to notify the general public.

Date and Time: Thursday, September 8, 2005, beginning at 8:30 a.m. and ending at approximately 5 p.m.

ADDRESSES: The Holiday Inn Capitol Hotel, 550 C Street, SW., Columbia Ballroom, Lobby Level, Washington, DC 20024

FOR FURTHER INFORMATION CONTACT: Ms. Nicole A. Barry, Deputy Director, Advisory Committee on Student Financial Assistance, Capitol Place, 80 F Street, NW., Suite 413, Washington, DC 20202–7582, (202) 219–2099.

SUPPLEMENTARY INFORMATION: The Advisory Committee on Student Financial Assistance is established under Section 491 of the Higher Education Act of 1965 as amended by Public Law 100–50 (20 U.S.C. 1098). The Advisory Committee serves as an independent source of advice and counsel to the Congress and the Secretary of Education on student financial aid policy. Since its inception,

the congressional mandate requires the Advisory Committee to conduct objective, nonpartisan, and independent analyses on important aspects of the student assistance programs under Title IV of the Higher Education Act. In addition, Congress expanded the Advisory Committee's mission in the Higher Education Amendments of 1998 to include several important areas: access, Title IV modernization, distance education, and early information and needs assessment. Specifically, the Advisory Committee is to review, monitor and evaluate the Department of Education's progress in these areas and report recommended improvements to Congress and the Secretary.

The Advisory Committee has scheduled this symposium to examine the current condition of college access and persistence in honor of the 40th anniversary of the Higher Education Act (HEA) of 1965. The proposed agenda includes expert testimony and discussions by prominent researchers and scholars who will (a) examine the HEA's past achievements as well as the financial barriers to college that continue to confront low- and moderate-income students, (b) highlight exemplary strategies at the federal, state, and institutional levels that can be implemented to ensure that more low- and moderate-income students have a chance to succeed in college, and (c) address the Advisory Committee's current reauthorization proposal to renew the nation's access and persistence partnership.

Space for the symposium is limited and you are encouraged to register early if you plan to attend. You may register by sending an e-mail to the following address: *ACSFA@ed.gov* or *Tracy.DeannaJones@ed.gov.* Please include your name, title, affiliation, complete address (including internet and e-mail, if available), and telephone and fax numbers. If you are unable to register electronically, you may fax your registration information to the Advisory Committee staff office at (202) 219–3032. You may also contact the Advisory Committee staff directly at (202) 219–2099. The registration deadline is Thursday, September 1, 2005.

Records are kept for Advisory Committee proceedings, and are available for inspection at the Office of the Advisory Committee on Student Financial Assistance, Capitol Place, 80 F Street, NW., Suite 413, Washington, DC from the hours of 9 a.m. to 5:30 p.m. Monday through Friday, except Federal holidays. Information regarding the Advisory Committee is available on the Committee's Web site, *http://www.ed.gov/ACSFA.*

Dated: August 9, 2005.

William J. Goggin,

Executive Director, Advisory Committee on Student Financial Assistance.

[FR Doc. 05–16094 Filed 8–12–05; 8:45 am]

BILLING CODE 4000–01–M

DEPARTMENT OF ENERGY

Correction on Expression of Interest Regarding the Scope of an Intended Solicitation for Superconductivity Partnerships With Industry (SPI) Projects

AGENCY: Office of Electricity Delivery and Energy Reliability, Department of Energy.

ACTION: Correction on notice of inquiry and opportunity to comment.

SUMMARY: In a release included in the **Federal Register** on Tuesday, August 2nd 2005, the Superconductivity Program within the U.S. Department of Energy solicited comments on a pending solicitation for Superconductivity Partnerships with Industry (SPI) Projects. That notice included an e-mail address for receiving electronic comments. The included address was incorrect; the correct address for responses is *SPIcomments@tms-hq.com* (repeated below).

DATES: Written comments are to be filed electronically by e-mailing to: *SPIcomments@tms-hq.com* no later than 5 p.m. eastern time September 30, 2005. Comments can also be submitted at the address listed below.

ADDRESSES: Office of Electricity Delivery and Energy Reliability, OE–2, Attention: SPI Comments, U.S. Department of Energy, Forrestal Building, Room 6H–034, 1000 Independence Avenue, SW., Washington, DC 20585.

Note that U.S. Postal Service mail sent to DOE continues to be delayed by several weeks due to security screening. Submission via FedEx or electronically is therefore encouraged.

FOR FURTHER INFORMATION CONTACT: Dr. James Daley, Office of Electricity Delivery and Energy Reliability, OE–2, Attention: SPI Comments, U.S. Department of Energy, 1000 Independence Avenue, SW., Washington, DC 20585.

Dr. James Daley,

Office of Electricity Delivery and Energy Reliability.

[FR Doc. 05–16130 Filed 8–12–05; 8:45 am]

BILLING CODE 6450–01–M

DEPARTMENT OF ENERGY

Federal Energy Regulatory Commission

[Docket No. EC05–106–000]

Calpine Energy Services, L.P.; Notice of Request To Withdraw Filing

August 8, 2005.

Take notice that on August 2, 2005, Calpine Energy Services, L.P. submitted a Notice of Withdrawal of their July 15, 2005, application in the above-referenced proceeding.

Any person desiring to intervene or to protest this filing must file in accordance with Rules 211 and 214 of the Commission's Rules of Practice and Procedure (18 CFR 385.211, 385.214). Protests will be considered by the Commission in determining the appropriate action to be taken, but will not serve to make protestants parties to the proceeding. Any person wishing to become a party must file a notice of intervention or motion to intervene, as appropriate. Such notices, motions, or protests must be filed on or before the comment date. Anyone filing a motion to intervene or protest must serve a copy of that document on the Applicant and all the parties in this proceeding.

The Commission encourages electronic submission of protests and interventions in lieu of paper using the ''eFiling'' link at *http://www.ferc.gov*. Persons unable to file electronically should submit an original and 14 copies of the protest or intervention to the Federal Energy Regulatory Commission, 888 First Street, NE., Washington, DC 20426.

This filing is accessible on-line at *http://www.ferc.gov*, using the ''eLibrary'' link and is available for review in the Commission's Public Reference Room in Washington, DC. There is an ''eSubscription'' link on the Web site that enables subscribers to receive e-mail notification when a document is added to a subscribed docket(s). For assistance with any FERC Online service, please e-mail *FERCOnlineSupport@ferc.gov*, or call (866) 208–3676 (toll free). For TTY, call (202) 502–8659.

Comment Date: 5 p.m. eastern time on August 23, 2005.

Linda Mitry,

Deputy Secretary.

[FR Doc. E5–4400 Filed 8–12–05; 8:45 am]

BILLING CODE 6717–01–P

DEPARTMENT OF ENERGY

Federal Energy Regulatory Commission

[Docket Nos. ER05–1079–000, ER05–1079–001, and ER05–1079–002]

Forest Investment Group, LLC; Notice of Issuance of Order

August 8, 2005.

Forest Investment Group, LLC (Forest) filed an application, as amended, for market-based rate authority, with an accompanying rate tariff. The proposed rate tariff provides for the sales of capacity and energy at market-based rates. Forest also requested waiver of various Commission regulations. In particular, Forest requested that the Commission grant blanket approval under 18 CFR part 34 of all future issuances of securities and assumptions of liability by Forest.

On August 5, 2005, pursuant to delegated authority, the Director, Division of Tariffs and Market Development—South, granted the request for blanket approval under part 34. The Director's order also stated that the Commission would publish a separate notice in the **Federal Register** establishing a period of time for the filing of protests. Accordingly, any person desiring to be heard or to protest the blanket approval of issuances of securities or assumptions of liability by Forest should file a motion to intervene or protest with the Federal Energy Regulatory Commission, 888 First Street, NE., Washington, DC 20426, in accordance with Rules 211 and 214 of the Commission's Rules of Practice and Procedure. 18 CFR 385.211, 385.214 (2004).

Notice is hereby given that the deadline for filing motions to intervene or protest is September 6, 2005.

Absent a request to be heard in opposition by the deadline above, Forest is authorized to issue securities and assume obligations or liabilities as a guarantor, indorser, surety, or otherwise in respect of any security of another person; provided that such issuance or assumption is for some lawful object within the corporate purposes of Forest, compatible with the public interest, and is reasonably necessary or appropriate for such purposes.

The Commission reserves the right to require a further showing that neither public nor private interests will be adversely affected by continued approval of Forest's issuances of securities or assumptions of liability.

Copies of the full text of the Director's Order are available from the Commission's Public Reference Room, 888 First Street, NE., Washington, DC 20426. The Order may also be viewed on the Commission's Web site at *http://www.ferc.gov*, using the eLibrary link. Enter the docket number excluding the last three digits in the docket number filed to access the document. Comments, protests, and interventions may be filed electronically via the internet in lieu of paper. *See* 18 CFR 385.2001(a)(1)(iii) and the instructions on the Commission's Web site under the ''e-Filing'' link. The Commission strongly encourages electronic filings.

Linda Mitry,

Acting Secretary.

[FR Doc. E5–4402 Filed 8–12–05; 8:45 am]

BILLING CODE 6717–01–P

DEPARTMENT OF ENERGY

Federal Energy Regulatory Commission

[Docket No. EL05–136–000]

Wisconsin Public Service Corporation; Notice of Institution of Proceeding and Refund Effective Date

August 8, 2005.

On August 4, 2005, the Commission issued an order that instituted a proceeding in Docket No. EL05–136–000, pursuant to section 206 of the Federal Power Act (FPA), 16 U.S.C. 824e, concerning the rate effect of Wisconsin Public Service Corporation's deferred accounting treatment reflected in its filing in Docket No. AC05–54–000. *Wisconsin Public Service Corporation,* 112 FERC ¶ 61,165 (2005).

The refund effective date in Docket No. EL05–136–000, established pursuant to section 206(b) of the FPA, will be 60 days from the date of publication of this notice in the **Federal Register**.

Linda Mitry,

Deputy Secretary.

[FR Doc. E5–4401 Filed 8–12–05; 8:45 am]

BILLING CODE 6717–01–P

DEPARTMENT OF ENERGY

Western Area Power Administration

Salt Lake City Area Integrated Projects-Rate Order No. WAPA–117

AGENCY: Western Area Power Administration, DOE.

ACTION: Notice of Order Concerning Power Rates.

SUMMARY: The Deputy Secretary of Energy confirmed and approved Rate Order No. WAPA–117 and Rate Schedule SLIP–F8, placing firm power rates for the Salt Lake City Area Integrated Projects (SLCA/IP) of the Western Area Power Administration (Western) into effect on an interim basis. The provisional rates will be in effect until the Federal Energy Regulatory Commission (Commission) confirms, approves, and places them into effect on a final basis or until they are replaced by other rates. The provisional rates will provide sufficient revenue to pay all annual costs, including interest expense, and repayment of power investment and irrigation aid, within the allowable periods.

DATES: Rate Schedule SLIP–F8 will be placed into effect on an interim basis on the first day of the first full billing period beginning on or after October 1, 2005, and will be in effect until the Commission confirms, approves, and places the rate schedules in effect on a final basis through September 30, 2010, or until the rate schedule is superseded.

FOR FURTHER INFORMATION CONTACT: Mr. Bradley S. Warren, CRSP Manager, CRSP Management Center, Western Area Power Administration, P.O. Box 11606, Salt Lake City, UT 84147–0606, (801) 524–6372, e-mail *warren@wapa.gov*, or Ms. Carol Loftin, Rates Manager, CRSP Management Center, Western Area Power Administration, P.O. Box 11606, Salt Lake City, UT 84147–0606, (801) 524–6380, e-mail *loftinc@wapa.gov*.

SUPPLEMENTARY INFORMATION: The Secretary of Energy approved existing Rate Schedule SLIP–F7 for SLCA/IP firm power on September 12, 2002 (Rate Order No. WAPA–99). The Commission confirmed and approved the rate schedule on November 14, 2003, in FERC Docket No. EF02–5171–000. The existing rate schedule is effective from October 1, 2002, for a 5-year period ending September 30, 2007.

The existing firm power Rate Schedule SLIP–F7 is being superseded by Rate Schedule SLIP–F8. Under Rate Schedule SLIP–F7, the energy rate is 9.5 mills per kilowatthour (mills/kWh), and the capacity rate is $4.04 per kilowattmonth ($/kWmonth). The composite rate is 20.72 mills/kWh. The provisional firm power rate consists of an energy charge of 10.43 mills/kWh and a capacity charge of $4.43 per kWmonth. The provisional rates for SLCA/IP firm power in Rate Schedule SLIP–F8 will result in an overall composite rate of 25.28 mills/kWh on October 1, 2005, and will result in an increase of about 22 percent when compared with the existing SLCA/IP

firm power composite rate under Rate Schedule SLIP–F7.

The firm power rate will also include a cost recovery mechanism called a Cost Recovery Charge (CRC). The CRC is necessary to adequately maintain a sufficient cash balance in the Upper Colorado River Basin Fund in times of financial hardship. The CRC is a charge on Sustainable Hydropower (SHP) energy, as determined by financial conditions. Each May, Western will provide Customers with information concerning the anticipated CRC for the upcoming fiscal year. Firm power Customers may choose to take less firm energy, and in exchange Western will waive the CRC charge.

By Delegation Order No. 00–037.00, effective December 6, 2001, the Secretary of Energy delegated: (1) The authority to develop power and transmission rates to Western's Administrator, (2) the authority to confirm, approve, and place such rates into effect on an interim basis to the Deputy Secretary of Energy, and (3) the authority to confirm, approve, and place into effect on a final basis, to remand or to disapprove such rates to the Commission. Existing DOE procedures for public participation in power rate adjustments (10 CFR part 903) were published on September 18, 1985.

Under Delegation Order Nos. 00–037.00 and 00–001.00A, 10 CFR part 903, and 18 CFR part 300, I hereby confirm, approve, and place Rate Order No. WAPA–117, the proposed SLCA/IP firm power rate, into effect on an interim basis. The new Rate Schedule SLIP–F8 will be promptly submitted to the Commission for confirmation and approval on a final basis.

Dated: August 1, 2005.

Clay Sell,

Deputy Secretary.

Order Confirming, Approving, and Placing the Salt Lake City Area Integrated Projects Firm Power Rate Into Effect on an Interim Basis

This rate was established in accordance with section 302 of the Department of Energy (DOE) Organization Act (42 U.S.C. 7152). This Act transferred to and vested in the Secretary of Energy the power marketing functions of the Secretary of the Department of the Interior and the Bureau of Reclamation (Reclamation) under the Reclamation Act of 1902 (ch. 1093, 32 Stat. 388), as amended and supplemented by subsequent laws, particularly section 9(c) of the Reclamation Project Act of 1939 (43 U.S.C. 485h(c)), and other Acts that specifically apply to the project involved.

By Delegation Order No. 00–037.00, effective December 6, 2001, the Secretary of Energy delegated: (1) The authority to develop power and transmission rates to Western's Administrator, (2) the authority to confirm, approve, and place such rates into effect on an interim basis to the Deputy Secretary of Energy, and (3) the authority to confirm, approve, and place into effect on a final basis, to remand or to disapprove such rates to the Commission. Existing DOE procedures for public participation in power rate adjustments (10 CFR part 903) were published on September 18, 1985.

Acronyms and Definitions

As used in this Rate Order, the following acronyms and definitions apply:

Administrator: The Administrator of the Western Area Power Administration.
A.F.: Acre-feet.
AFC: Actual firming energy costs (MWh) as used in the PYA formula.
AHP: Available Hydropower.
Basin Fund: Upper Colorado River Basin Fund.
BFBB: Basin Fund Beginning Balance as used in the CRC formula.
BFTB: Basin Fund Target Balance as used in the CRC formula.
Capacity: The electric capability of a generator, transformer, transmission circuit, or other equipment. It is expressed in kW.
Capacity Rate: The rate which sets forth the charges for capacity. It is expressed in $/kWmonth and applied to each kW of CROD.
Commission: Federal Energy Regulatory Commission.
Composite Rate: The rate for firm power which is the total annual revenue requirement for capacity and energy divided by the total annual energy sales. It is expressed in mills/kWh and used for comparison purposes.
CRC: Cost Recovery Charge.
CRCE: CRC Energy (GWh) as used in the CRC and PYA formulas.
CRCEP: CRC Energy Percentage of full SHP as used in the CRC and PYA formulas.
CROD: Contract Rate of Delivery. The maximum amount of capacity made available to a preference Customer for a period specified under a contract.
CRSP: Colorado River Storage Project.
CRSP MC: The CRSP Management Center of Western.
CUP: Central Utah Project.
Customer: An entity with a contract that is receiving firm electric service from Western's CRSP MC.
DOE: United States Department of Energy.
DOE Order RA 6120.2: An order outlining power marketing administration financial reporting and ratemaking procedures.
DPR: Definite Plan Report of the CUP.
EA: SHP Energy Allocation (GWh) as used in the CRC formula.
EAC: Sum of Customers' energy allocations subject to the PYA formula.
Energy: Measured in terms of the work it is capable of doing over a period of time. It is expressed in kilowatthours.
Energy Rate: The rate which sets forth the charges for energy. It is expressed in mills/kilowatthour and applied to each kilowatthour delivered to each Customer.
FA: Funds Available as used in the CRC formula.
FA1: Basin Fund Balance Factor as used in the CRC formula.
FA2: Revenue Factor as used in the CRC formula.
FARR: Additional revenue to be recovered as used in the CRC formula.
FE: Forecasted purchase energy as used in the CRC formula.
FERC: The Commission.
FFC: Forecasted Firming Energy Cost per MWh as used in the CRC and PYA formula.
Firm: A type of product and/or service guaranteed to be available in accordance with the terms of the contract.
FRN: **Federal Register** notice.
FX: Forecasted energy purchase expense as used in the CRC formula.
FY: Fiscal year; October 1 to September 30.
GWh: Gigawatthour—the electrical unit of energy that equals 1 billion watthours or 1 million kWh.
HE: Forecasted hydro energy as used in the CRC formula.
Integrated Projects: The resources and revenue requirements of the Collbran, Dolores, Rio Grande, and Seedskadee projects blended together with the CRSP to create the SLCA/IP resources and rate.
kW: Kilowatt—the electrical unit of capacity that equals 1,000 watts.
kWh: Kilowatthour—the electrical unit of energy that equals 1,000 watts in 1 hour.
kWmonth: Kilowattmonth—the electrical unit of the monthly amount of capacity.
Load: The amount of electric power or energy delivered or required at any specified point(s) on a system.
M&I: Municipal and Industrial water.
Mill: A monetary denomination of the United States that equals one tenth of a cent or one thousandth of a dollar.
Mills/kWh: Mills per kilowatthour—a unit of charge for energy.
MW: Megawatt—the electrical unit of capacity that equals 1 million watts or 1,000 kilowatts.
NB: Net Balance as used in the CRC formula.
NEPA: National Environmental Policy Act of 1969 (42 U.S.C. 4321, *et seq.*).
Non-firm: A type of product and/or service not always available at the time requested by the Customer.
NR: Net Revenue. Revenue remaining after paying all annual expenses as used in the CRC formula.
O&M: Operation and Maintenance.
OM&R: Operation, Maintenance & Replacements.
PAE: Projected Annual Expenses as used in the CRC formula.
PAR: Projected Annual Revenue ($) without CRC as used in the CRC formula.
Participating Projects: The Dolores and Seedskadee projects participating with CRSP according to the CRSP Act of 1956.

PFE: Prior year actual firming energy as used in the PYA formula.
PFX: Prior year actual firming expenses as used in the PYA formula.
Pinch Point: The nearest future year in the PRS where cumulative expenses equal cumulative revenues.
Power: Capacity and energy.
Project Use: Power used to operate the CRSP Participating Projects facilities under Reclamation Law.
Proposed Rate: A rate that has been recommended by Western to the Deputy Secretary of DOE for approval.
Provisional Rate: A rate which has been confirmed, approved, and placed into effect on an interim basis by the Deputy Secretary of DOE.
PRS: Power Repayment Study.
PYA: Prior Year Adjustment.
RA: Revenue Adjustment as used in the PYA formula.
Rate Brochure: A document explaining the rationale and background for the rate proposal contained in this Rate Order, dated February 2005.
Ratesetting PRS: The PRS used for the rate adjustment proposal.
Reclamation: United States Department of the Interior, Bureau of Reclamation.
Reclamation Law: A series of Federal laws. Viewed as a whole, these laws create the originating framework under which Western markets power.
Revenue Requirement: The revenue required to recover annual expenses, such as O&M, purchase power, transmission service expenses, interest, deferred expenses, and repayment of Federal investments, and other assigned costs.
SHP: Sustainable Hydropower.
SLCA/IP: Salt Lake City Area Integrated Projects—the resources and revenue requirements of the Collbran, Dolores, Rio Grande, and Seedskadee projects blended together with the CRSP to create the SLCA/IP rate.
Supporting Documentation: A compilation of data and documents that support the Rate Brochure and the rate proposal.
USDA: United States Department of Agriculture.
Western: United States Department of Energy, Western Area Power Administration.
WL: Waiver Level as used in the CRC formula.
WLP: Waiver Level Percentage of full SHP as used in the CRC formula.
WPR: The Work Program Review is a draft estimate of costs that are expected to be included in the Congressional Budget for Western and Reclamation.
WRP: Western Replacement Power.

Effective Date

The new interim rates will take effect on the first day of the first full billing period beginning on or after October 1, 2005, and will remain in effect until September 30, 2010, pending approval by the Commission on a final basis.

Public Notice and Comment

Western followed the Procedures for Public Participation in Power and Transmission Rate Adjustments and Extensions, 10 CFR part 903, in developing these rates. The steps Western took to involve interested parties in the rate process were:

1. The proposed rate adjustment process began October 6, 2004, when Western mailed a notice announcing an informal Customer meeting on October 27, 2004, to all SLCA/IP Customers and interested parties.
2. On October 27, 2004, beginning at 1:30 p.m., an informal Customer meeting was held to discuss the components and rationale for the rate adjustment, present a rate design, and answer questions.
3. A **Federal Register** notice published on January 18, 2005 (70 FR 2858), announced the proposed rate adjustment for SLCA/IP. This publication began a public consultation and comment period, and announced the public information and public comment forums.
4. On February 7, 2005, Western's CRSP MC mailed letters to all SLCA/IP preference Customers and interested parties transmitting the Brochure for Proposed Rates.
5. On February 23, 2005, beginning at 1:30 p.m., Western held a public information forum at the Quality Inn, Salt Lake City Airport in Salt Lake City, Utah. Western provided detailed explanations of the proposed SLCA/IP rates. Western provided rate brochures, supporting documentation, and informational handouts.
6. On March 30, 2005, beginning at 1:30 p.m., Western held a comment forum at the Quality Inn, Salt Lake City Airport in Salt Lake City, Utah, to give the public an opportunity to comment for the record. Five individuals commented at this forum.
7. Western received 21 comment letters during the consultation and comment period, which ended April 18, 2005. All formally submitted comments have been considered in preparing this Rate Order.

Comments

Written comments were received from the following organizations: Ak-Chin Tribe, Arizona, Aspen City, Colorado, Bureau of Reclamation, Upper Colorado Region, Utah, Colorado River Commission of Nevada, Nevada, Colorado River Energy Distributors Association, Arizona, Colorado Springs Utility, Colorado, Deseret Power Electric Cooperative, Utah, Dolores Water Conservancy District, Colorado, Fleming City, Colorado, Gunnison City, Colorado, Holyoke City, Colorado, Irrigation & Electrical Districts Association of Arizona, Arizona, Mt. Wheeler Power, Inc., Nevada, Navajo Tribal Utility Authority, Arizona, Oak Creek, Town, Colorado, Ocotillo Water Conservation District, Arizona, Platte River Power Authority, Colorado, Salt River Project, Arizona, Tri-State Generation and Transmission Association, Inc., Colorado, Utah Associated Municipal Power Systems, Utah, and White Mountain Apache Tribe, Arizona.

Representatives of the following organizations made oral comments: Colorado River Energy Distributors Association, Arizona, Deseret Power Electric Cooperative, Utah, Dolores Water Conservancy District, Colorado, Garkane Energy Incorporated, Utah, Utah Associated Municipal Power Systems, Utah.

Project Description

The SLCA/IP consists of the CRSP and the Rio Grande and Collbran projects. The CRSP includes two Participating Projects that have power facilities, the Dolores and Seedskadee projects. Western integrated the Rio Grande and Collbran projects with CRSP for marketing and ratemaking purposes on October 1, 1987. The goals of integration were to increase marketable resources, simplify contract and rate development and project administration by creating one rate, and to ensure repayment of the Projects' costs. All Integrated Projects maintain their individual identities for financial accounting and repayment purposes, but their revenue requirements are integrated into the SLCA/IP PRS for ratemaking.

Power Repayment Study—Firm Power Rate

Western prepares a PRS each FY to determine if revenues will be sufficient to repay, within the required time, all costs assigned to the SLCA/IP revenue requirement. Repayment criteria are based on law, policies including DOE Order RA 6120.2, and authorizing legislation.

Proposed rates for SLCA/IP firm power result in an overall composite rate increase of approximately 22 percent on October 1, 2005, when compared to the existing SLCA/IP firm power rates in Rate Schedule SLIP–F7. The current composite rate under Rate Schedule SLIP–F7 is 20.72 mills/kWh; however, in actuality this effective composite rate is 25.10 mills/kWh as a result of a decrease in the contractual amount of electrical service provided to the firm power Customers beginning in FY 2005. The proposed composite rate is 25.28 mills/kWh. The following table

compares the current and proposed firm power rates:

COMPARISON OF CURRENT AND PROPOSED FIRM POWER RATES

	Current rate	Proposed rate	Increase
Rate Schedule	SLIP–F7	SLIP–F8	
Energy (mills/kWh)	9.50	10.43	.93
Capacity ($/kW month)	4.04	4.43	.39
Composite Rate (mills/kWh)	20.72	25.28	4.56

Cost Recovery Charge

Over the last several years, hydropower generation production has been lower than expected, and purchased power prices have been higher than forecasted. Reduced hydropower generation, due to extended drought conditions in the region, has caused actual purchase power expenses to be significantly higher than forecasts, resulting in cost-recovery issues for the Basin Fund.

In the proposed Ratesetting PRS, purchased power expense beyond the initial 5-year cost evaluation period has been reduced in anticipation that return-to-normal water conditions will result in Western meeting its firm power commitments through hydropower generation. However, in the event that expenses significantly exceed estimates and in order to adequately recover and maintain a sufficient balance in the Basin Fund, Western proposes to implement a CRC on all SHP energy.

The CRC is strictly a Basin Fund cash analysis and is outside of the PRS calculations. In calculating the CRC, Western will forecast the amount of revenue available in the Basin Fund to purchase the energy necessary to deliver the yearly SHP energy commitment in the next FY. Western will estimate the availability of revenue in the Basin Fund, at the beginning and end of the FY, to maintain a BFTB for the following year, and to limit the annual loss to the Basin Fund. The BFTB will be equal to 15 percent of the upcoming year's total expenses but not less than $20 million. The allowable annual loss is limited to no more than 25 percent of the BFBB. Once Western determines the amount of revenue available in the Basin Fund for anticipated expenses, it will determine if additional revenue is needed and will include this amount in the Customers' firm power bill through the assessment of a CRC. All expenses are considered in the CRC, with the exception of non-reimbursable program expenses, which are limited to $25 million per year, indexed for inflation. This limitation is for CRC formula calculation purposes only, and is not a cap on actual non-reimbursable expenses.

Calculation of the CRC

Western will forecast the amount of purchased energy necessary to deliver SHP energy, the corresponding expense, and determine the funds available for firming purchases. In determining the forecasted funds available, the impact on Net Revenue (projected annual revenue less projected annual expenses), and the Basin Fund Net Balance (Basin Fund FY beginning balance plus net revenue) will be analyzed. If the impact on both of these fall short of the revenue and balance triggers described above, the CRC will not apply during that FY. If the impact on either net revenue or the Basin Fund balance is greater than the allowable limits, the smaller factor will be used to determine the additional revenue requirements. For FY 2006, the CRC charge is 0.0 mills/kWh. For purposes of explaining how the CRC is calculated, the following example is provided:

SAMPLE CRC CALCULATION

	Description		Formula [1]
Step One.—Determine the Net Balance Available in the Basin Fund			
BFBB	Basin Fund Beginning Balance ($)	$27,900,000	Financial forecast.
BFTB	Basin Fund Target Balance ($)	$27,665,550	$.15 * PAE (not less than $20 million).
PAR	Projected Annual Revenue ($) w/o CRC.	$165,984,000	Financial forecast.
PAE	Projected Annual Expense ($)	$184,437,000	Financial forecast.
NR	Net Revenue ($)	$(18,453,000)	PAR – PAE.
NB	Net Balance ($)	$9,447,000	BFBB + NR.
Step Two.—Determine the Forecasted Energy Purchase Expenses			
EA	SHP Energy Allocation (GWh)	4,655	Customer contracts.
HE	Forecasted Hydro Energy (GWh)	4,218	Hydrologic & generation forecast.
FE	Forecasted Energy Purchase (GWh).	427	EA – HE.
FFC	Forecasted Avg. Energy Price per MWh ($).	$55.50	From commercially available price indices.
FX	Forecasted Energy Purchase Expense ($).	$24,253,500	PE * FFC.
Step Three.—Determine the Amount of Funds Available for Firming Energy Purchases, and Then Determine Additional Revenue To Be Recovered. The Following Two Formulas Will Be Used To Determine FA, the Leader of the Two Will Be Used			
FA1	Based Fund Balance Factor ($)	$6,034,950	If (NB > BFBB, FX, FX – (BFTB – NB)).

SAMPLE CRC CALCULATION—Continued

	Description		Formula [1]
FA2	Revenue Factor ($)	$12,775,500	If (NR > −.25*BFBB,FX, FX + NR +.25*BFBB).
FA	Funds Available ($)	$6,034,950	Lesser of FA1 or FA2 (not less than $0).
FARR	Additional Revenue to be Recovered ($).	$18,218,550	FX − FA.
Step Four.—Once the FA for Purchases Have Been Determined, the CRC Can Be Calculated, and the WL Can Be Determined			
WL	Waiver Level (GWh)	4,327	If (EA > HE, EA, HE + (FE*(FA/FX))), but not less than HE.
WLP	Waiver Level Percentage of Full SHP.	93%	WL/EA*100.
CRCE	CRC Energy (GWh)	328	EA − WL.
CRCEP	CRC Energy Percentage of Full SHP.	7%	CRCE/EA*100.
CRC	Cost Recovery Charge (mills/kWh)	3.91	FARR/(EA*1,000).

[1] Some formulas in this table are based on standard Excel spreadsheet formatting.

Narrative CRC Example

Step One: Determine the Net Balance Available in the Basin Fund

BFBB—Determine the Basin Fund Beginning Balance for next FY. In this example, Western estimates that the BFBB will be $27,900,000.

BFBB = $27,900,000

BFTB—Determine the Basin Fund Target Balance for the next FY. The BFTB is 15 percent of Projected Annual Expenses for the coming FY, but will not be less than $20 million.

BFTB = 0.15 * PAE

BFTB = 0.15 * $184,437,000

BFTB = $27,665,550

PAR − Projected Annual Revenue is an estimate of revenue for the next FY.

PAR = $165,984,000

PAE—Projected Annual Expense is an estimate of total cash outlay from the Basin Fund for the next FY. The PAE includes all cash outlay from the Basin Fund including non-reimbursable expenses, which are capped at $25 million per year plus an inflation factor. This limitation is for CRC formula calculation purposes only, and is not a cap on actual non-reimbursable expenses.

PAE = $184,437,000

NR—Net Revenue equals Projected Annual Revenues minus Projected Annual Expenses.

NR = PAR − PAE

NR = $165,984,000 − $184,437,000

NR = ($18,453,000)

NB—Net Balance is the Basin Fund Beginning Balance plus Net Revenue.

NB = BFBB + NR

NB = $27,900,000 + ($18,453,000)

NB = $9,447,000

Step Two: Determine the Forecasted Energy Purchase Expenses

EA—The Sustainable Hydropower Energy Allocation. This does not include Project Use Customers.

EA = 4,655 GWh

HE—The forecasted Hydro Energy available during the next FY.

HE = 4,218 GWh

FE—Forecasted Energy purchases are the difference between the sustainable hydropower allocation and the forecasted hydro energy available for the next FY, or the anticipated firming purchases for the next year.

FE = EA − HE
FE = 4,655 − 4,218
FE = 437 GWh

FFC—The forecasted energy price for the next FY per MWh based on commercially available price indices.

FFC = $55.50/WHh

FX—Forecasted Energy purchase power expenses based on the current year April 24-month study, representing an estimate of the total cost of firming purchases for the coming FY.

FX = FE * FFC * 1,000
FX = 437 * $55.50 * 1,000
FX = $24,253,500

Step Three: Determine the Amount of Funds Available for Firming Energy Purchases, and Then Determine Additional Revenue To Be Recovered. The Following Two Formulas Will Be Used To Determine FA, the Lesser of the Two Will Be Used. Funds Available Shall Not Be Less Than Zero

A. Basin Fund Balance Factor (FA1)

The first formula ensures that the Net Balance will not go below 15 percent of the total expenses for that FY. If the net balance is greater than the Basin Fund Target Balance, then the value for forecasted energy purchase power expenses is used. If the net balance is less than the Basin Fund Target Balance, then reduce the value of the forecasted energy purchase power expenses by the difference between the Basin Fund Target Balance and the Net Balance.

FA1 = If (NB > BFTB, FX,
FX − (BFTB − NB))

If the Net Balance is greater than the Basin Fund Target Balance, then

FA1 = FX

If the Net Balance is less than the Basin Fund Target Balance, then

FA1 = FX − (BFTB − NB)

Since the Net Balance, $9,447,000, is less than the Basin Fund Target Balance, $27,665,550,

FA1 = FX − (BFTB − NB)
FA1 =
$24,253,500 − ($27,665,550 − $9,447,000)
($27,665,550 − $9,447,000)
FA1 = $6,034,950

B. Basin Fund Revenue Factor (FA2)

The second factor ensures that Net Revenue does not result in a loss that exceeds 25 percent of the Basin Fund Beginning Balance. If Net Revenue is greater than a minus 25 percent of the Basin Fund Beginning Balance, then use the value for Forecasted Energy Purchase Expense. If the Net Revenue is less than a minus 25 percent of the Basin Fund Beginning Balance, then add the Net Revenue and 25 percent of the Basin Fund Beginning Balance to the FX.

FA2 = If (NR > –0.25 * BFBB, FX, FX
+ NR + 0.25 * BFBB)

If the NR does not result in a loss that exceeds 25 percent of the BFBB, then

FA2 = FX

If the NR results in a loss that exceeds 25 percent of the BFBB, then

FA2 = FX + NR + 0.25 * BFBB

Since NR ($18,453,000) is less than a minus 25 percent of BFBB ($6,975,000)

FA2 = FX + NR + 0.25 * BFBB

FA2 = $24,253,500 + ($18,453,000) + $6,975,000
FA2 = $12,775,500

FA—Determine the Funds Available by using the lesser of FA1 and FA2.

FA1 = $6,034,950
FA2 = $12,752,000
FA = FA1
FA = $6,034,950

FARR—Calculate the additional revenue to be recovered by subtracting the Funds Available from the forecasted energy purchase power expenses.

FARR = FX − FA
FARR = $24,253,500 − $6,034,950
FARR = $18,218,550

Step Four: Once the Additional Revenue To Be Recovered Has Been Determined, the Cost Recovery Charge Can Be Calculated, and the Waiver Level Can Be Determined

A. Cost Recovery Charge (CRC)

The CRC will be a charge to recover the additional revenue required as calculated in Step 3. The CRC will apply to all Customers who choose not to request a waiver of the CRC, as discussed below. The CRC equals the additional revenue to be recovered divided by the total energy allocation to all Customers for the FY.

CRC = FARR/EA
CRC = $18,218,550/4655
CRC = 3.91 mills/kWh

B. Waiver Level (WL)

The WL provides Customers the ability for Western to reduce purchased power expenses by scheduling less energy than their contractual amount. Therefore, Western will establish an energy WL. For those Customers who voluntarily schedule no more energy than their proportionate share of the WL, Western will waive the CRC for that year.

The WL will be set at the sum of the energy that can be provided through hydro generation and purchased with Funds Available. The WL will not be less than the Forecasted Hydro Energy.

WL = If (EA < HE, EA, HE + (FE * (FA/FX)))

If SHP Energy Allocation is less than forecasted HE available, then

WL = EA

If SHP Energy Allocation is greater than forecasted HE available, then

WL = HE + (FE * (FA/FX))

Since HE 4,218 is less than SHP Energy Allocation, 4,655,

WL = HE + (FE * (FA/FX))
WL = 4,218 + (437 * ($6,034,950/$24,253,500))
WL = 4,327 GWh

Prior Year Adjustment (PYA) Calculation

Since the annual determination of the CRC is based upon estimates, an annual PYA will also be calculated when the CRC is applied. The PYA will be applied to those Customers who were charged the CRC. The CRC PYA for subsequent years will be determined by comparing the prior year's estimated firming energy cost to the prior year's actual firming energy cost for the energy provided above the WL. The PYA will result in an increase or decrease to a Customer's firm energy costs over the course of the following year. Because there will not be a CRC for FY 2006, the PYA will not be needed in 2007. Below is an example of a PYA calculation.

SAMPLE PYA CALCULATION

	Description		Formula
Step One—Determine Actual Expenses and Purchases for Previous Year's Firming. This Data Will Be Obtained From Western's Financial Statements at the End of FY			
PFX	Prior Year Actual Firming Expenses ($)	$27,950,000	Financial Statements.
PFE	Prior Year Actual Firming Energy (GWh)	475	Financial Statements.
Step Two—Determine the Actual Firming Cost for the CRC Portion.			
EAC	Sum of the energy allocations of Customers subject to the PYA (GWh).	2,500	
FFC	Forecasted Firming Energy Cost—($/MWh)	55.50	From CRC Calculation.
AFC	Actual Firming Energy Cost—($/MWh)	58.84	PFX/PFE.
CRCEP	CRC Energy Percentage	7%	From CRC Calculation.
CRCE	Purchased Energy for the CRC (GWh)	176	EAC*CRCEP.
Step Three—Determine Revenue Adjustment (RA) and PYA.			
RA	Revenue Adjustment ($)	$589,198	(AFC–FFC)*CRCE*1,000.
PYA	Prior Year Adjustment (mills/kWh)	0.24	(RA/EAC)/1,000.

Narrative PYA Example Only (Assumes That a CRC Was needed for the Previous Year)

Step One: Determine actual expenses and purchases for previous year's firming. This data will be obtained from Western's financial statements at end of FY.

PFX—Prior year actual firming expense,

PFX = $27,950,000

PFE—Prior year actual firming energy,

PFE = 475 GWh

Step Two: Determine the actual firming cost for the Cost Recovery Charge portion.

EAC—Sum of the energy allocations of Customers who were assessed the Cost Recovery Charge for the prior year.

EAC = 2,500 GWh

CRCE—The amount of CRC Energy needed, so

CRCE = EAC * CRCEP
CRCE = 2500 * .07
CRCE = 176 GWh

AFC—The Actual Firming Energy Cost is the PFX divided by the PFE

AFC = (PFX / PFE) / 1,000
AFC = ($27,950,000 / 475) / 1,000
AFC = $58.84

Step Three: Determine Revenue Adjustment and PYA.

RA—The Revenue Adjustment is Actual Firming Energy Cost less Forecasted Firming Energy Cost times Purchased Energy for the CRC.

RA = (AFC–FFC) * CRCE * 1,000
RA = ($58.84–$55.50) * 176 * 1,000
RA = $589,198

PYA—The PYA is the Revenue Adjustment divided by the SHP Energy

Allocation for the Cost Recovery Charge Customers only.

PYA = (RA / EAC) / 1,000
PYA = ($589,198 / 2,500) / 1,000
PYA = .24 mills/kWh

The Customers' PYA will be based on their prior year's energy multiplied by the PYA mills/kWh to determine the dollar value that will be assessed. The Customer will be charged or credited for this dollar amount equally in the remaining months of the next year's billing cycle. Western will attempt to complete this calculation by December of each year. Therefore, if the PYA is calculated in December, the charge/credit will be spread over the remaining 9 months of the FY (January through September).

CRC Schedule: Western will provide its Customers with information concerning the anticipated CRC each May prior to the beginning of the effective FY. The established CRC will be in effect for the entire FY. The table below displays the time frame for determining the amount of purchases needed, notifying Customers of the CRC, and the deadline for requesting a waiver of the CRC. This schedule has been changed to reflect Customer concerns that the proposed schedule did not allow them enough time to make a decision about requesting a waiver of the CRC.

CRC SCHEDULE

Task	Date each year
April 24—Month Study (Forecast to Model Projections).	April 1.
CRC Notice to Customers	May 1.
Waiver Request Submitted By Customers.	June 15.
Schedules Effective	October 1.

Existing and Provisional Rates

A comparison of the existing and provisional firm power rates follows:

COMPARISON OF EXISTING AND PROVISIONAL SALT LAKE CITY AREA/INTEGRATED PROJECTS FIRM POWER AND COST RECOVERY CHARGE

Rate schedule	Current rate October 1, 2003–September 30, 2007 (SLIP–F7)	Proposed rate October 1, 2005–September 30, 2010 (SLIP–F8)	Percent change
Energy (mills/kWh)	9.5	10.43	10
CRC (if applicable)	*N/A*	*varies*	
Total Energy Charge	9.5	varies	N/A
Capacity ($/kWmonth)	4.04	4.43	10

Certification of Rates

Western's Administrator certified that the interim rates for SLCA/IP firm power are the lowest possible rates consistent with sound business principles. The provisional rates were developed following administrative policies and applicable laws.

SLCA/IP Firm Power Rate Discussion

According to Reclamation Law, Western must establish power rates sufficient to recover operation, maintenance, purchased power expenses, interest expenses, and repayment of power investment and irrigation aid.

The existing rate for SLCA/IP firm power under Rate Schedule SLIP–F7 expires September 30, 2007, a new rate to recover increased costs will be effective October 1, 2005, and Rate Schedule SLIP–F7 will be superseded by the new rates in Rate Schedule SLIP–F8. The provisional rates for SLCA/IP firm power consist of a capacity rate and an energy rate. The provisional capacity rate is $4.43 per kWmonth, and the provisional energy rate is 10.43 mills/kWh.

Statement of Revenue and Related Expenses

The following table provides a summary of projected revenue and expense data for the SLCA/IP firm power rate through the 5-year provisional rate approval period.

SLCA/IP FIRM POWER COMPARISON OF 5-YEAR RATE PERIOD (FY 2006–FY 2010) TOTAL REVENUES AND EXPENSES

	Existing rate ($000)	Proposed rate ($000)	Difference ($000)
Total Revenues	$775,642	$815,494	$39,852
Revenue Distribution			
Expenses:			
O&M	292,755	305,198	12,443
Purchased Power and Wheeling	55,426	131,529	76,103
Integrated Projects Requirements	45,250	38,582	(6,668)
Interest	134,559	80,003	(54,556)
Other	19,660	18,488	(1,172)
Total Expenses	547,650	573,800	26,150
Principal Payments:			
Capitalized Expenses (deficits)	0	0	0
Original Project and Additions	214,278	99,970	(114,308)
Replacements	13,714	141,724	128,010
Irrigation	0	0	0
Total Principal Payments	227,992	241,694	13,702

SLCA/IP FIRM POWER COMPARISON OF 5-YEAR RATE PERIOD (FY 2006–FY 2010) TOTAL REVENUES AND EXPENSES—Continued

	Existing rate ($000)	Proposed rate ($000)	Difference ($000)
Total Revenue Distribution	775,642	815,494	39,852

Basis for Rate Development

The existing rates for SLCA/IP firm power in Rate Schedule SLIP–F7 no longer provide sufficient revenues to pay all annual costs, including interest expense, and repay investment and irrigation aid within the allowable periods. The adjusted rates reflect increases primarily in O&M costs, purchase power costs, and a reduction in energy sales. The costs are offset by changes in interest and principal payments that are a result of a reconstruction of the PRS that ensured all principal payments and interest were applied correctly in the PRS. The provisional rates will provide sufficient revenue to pay all annual costs, including interest expense, and repayment of power investment and irrigation aid within the allowable periods. The provisional rates will take effect on October 1, 2005, to correspond with the start of the Federal FY, and will remain in effect through September 30, 2010.

Provisions for transformer losses adjustment, power factor adjustment, WRP administrative charge, and Customer Displacement Power administrative charge adjustments are part of the provisional rates for SLCA/IP firm power. Western will not modify the provisions and methodologies for these adjustments, which will remain as specified in SLIP–F7.

Comments

The comments and responses regarding the firm power rate, paraphrased for brevity when not affecting the meaning of the statement(s), are discussed below. Direct quotes from comment letters are used for clarification where necessary. The rate process issues discussed are (1) Base Rate and (2) Cost Recovery Charge.

1. Base Rate

A. *Comment:* A Customer representative wanted to know if the salinity costs of the USDA were in the FY 2006 President's Budget and if the same amount is being used in the PRS.

Response: The USDA and Natural Resource Conservation Service salinity program costs are included in the FY 2006 President's Budget. The total Upper Basin Fund obligation for salinity in the FY 2006 President's Budget is estimated at $2.2 million, which includes Reclamation's salinity program costs. Expenses included in the Ratesetting PRS are from the FY 2006 WPR, which included $2.6 million for salinity program costs. The minimal reduction in the FY 2006 President's Budget for salinity costs would have almost no impact on the firm power rate. This would impact the rate less than .01 mill/kWh.

B. *Comment:* A Customer group requests the final CUP DPR for the Bonneville Unit be included in the PRS and costs allocated to temporary irrigation be reclassified as M&I for repayment purposes. Another commenter was concerned about using the DPR in the PRS stating that the DPR has a significant impact on the proposed rate, yet the costs associated with the DPR are tentative, with cost estimates based on preliminary engineering designs and final cost allocations remaining uncertain. To reduce the impact of the DPR on the rate, a Customer group recommended that all costs in the final DPR allocated to irrigation be included beyond the ratesetting period. The commenter suggested that the DPR should be incorporated into a future PRS when the numbers are more certain.

Response: The results of the Final Supplement to the 1988 DPR for the Bonneville Unit of the CUP have been included in the PRS and are final numbers from Reclamation. In the draft Bonneville Unit DPR, there was mention of a block of water (temporary irrigation) amounting to 20,000 A.F. The DPR mentioned that this water has been used for irrigation since 1996 and would continue through 2030. In 2030, this 20,000 A.F. would be converted to M&I use, along with 10,000 additional A.F. earmarked for M&I use. The 30,000 A.F. would be used for M&I through the remainder of the evaluation period (FY 2115). The draft DPR used an accounting method that compared the allocation of the water between irrigation and M&I water as follows:

	Irrigation	M&I	Total
Acre—Feet	20,000	30,000	50,000
Percent	40%	60%	100%

These percentages, as shown in the table above, were used to allocate ''assigned joint costs'' between irrigation and M&I in the draft DPR. The draft DPR added the benefit (water) used by irrigation and the total water eventually used by M&I and computed a percent of each to the sum of the two or total water use. Irrigation's use of the water was 20,000 A.F., and M&I's was 30,000 A.F. for a total of 50,000 A.F. This was incorrect since there is only a total of 30,000 A.F. (20,000 A.F. initially used by irrigation and the 10,000 A.F. reserved for M&I use that was never used by irrigation). The final DPR now included in the PRS uses a present value of water supply approach. This brings the two uses of the water back to a present value based on historical and future use. The present values were compared to each other for allocation purposes as follows:

	Irrigation	M&I	Total
Acre—Feet	293,598	318,383	611,981
Percent	47.98%	52.02%	100%

In the final DPR, weight is given to the timing and uses of the temporary irrigation water. The present value method, as opposed to the method used in the draft DPR, actually yields an increase in the percentage allocation to irrigation.

C. *Comment:* Several Customers commented that they support Western's inclusion of $2 million per year of purchased power costs in the PRS in those years beyond FY 2009.

Response: Western appreciates the support. As discussed in the rate brochure, Western has provided notice to its Customers that it may change the SHP allocations in FY 2009 to where little or no purchased power costs will be necessary except for operational purposes. Western will continue to work with its Customers and provide ample notice regarding SHP allocations.

D. *Comment:* A Customer representative encouraged Western to consider potential rate and cash flow impacts prior to including expenses such as replacement of the Flaming Gorge transformers in its WPR. The representative stated the purpose and intent of the 1992 WPR and joint transmission planning principles are to promote ''rate impact planning,'' so full consideration is given to potential project and rate impacts prior to decisions being made to include the costs in CRSP WPR documents. Specifically, Western should provide study results identifying the cause of the overload condition at Flaming Gorge and should actively seek cost sharing from other entities in the affected region prior to including the full cost of the transformers in the WPR. In addition, several Customers believe that Western needs to reduce its O&M and construction costs, including travel expenses.

Response: Replacement of the Flaming Gorge transformers is necessary due to system overload conditions. Western believes these replacements are necessary to keep the system intact. On June 28, 2005, Western hosted a meeting with all of the affected parties to discuss the history of the Flaming Gorge transformers as well as the operating history under steady-state and N–1 outage conditions. Western will continue to work with the affected parties as part of the process for replacing the Flaming Gorge transformers. The rate impact of including a $3 million replacement cost in FY 2006 is approximately .02 mills/kWh. Western will continue to pursue cost-reduction opportunities; however, it must also maintain system reliability. Western believes the WPR process it conducts with its Customers has been beneficial in reducing both Reclamation's and Western's O&M and Construction costs. Western will continue to look for ways to reduce its O&M costs and consult with Customers on program costs. Travel expenses are being managed carefully, and discretionary travel is being deferred and/or conference calls are being used more frequently.

E. *Comment:* Several Customers suggest that Western and Reclamation suspend CRSP power revenue contributions to ''discretionary'' environmental programs during drought conditions and seek alternative sources of funding, such as appropriations. To the extent the agencies can influence actual spending for the Colorado River Basin Salinity Control Program, they should urge reduced spending during drought conditions. In addition, the agencies should not support or implement experimental or operational changes that have a negative impact on the Basin Fund cash flow during periods of drought.

Response: Western and Reclamation also support the concept of seeking alternative sources of funding to assist with funding shortages resulting from the continuing drought and will work with power Customers and other interests in seeking acceptable solutions; however, Western and Reclamation do not believe their obligation to fund the environmental programs is discretionary.

F. *Comment:* A Customer group recommends that Western adopt a policy of solving the PRS to the nearest 100th of a mill as opposed to rounding the rate up to the nearest 10th of a mill.

Response: Western agrees and has solved the proposed rate to the nearest 100th of a mill.

G. *Comment:* A Project Use Customer commented that irrigators are getting a ''double hit,'' meaning that they have no water and their Project Use rates are going up 25 to 30 percent. The commenter asked that Western and Reclamation explore other options.

Response: Western does not directly charge Project Use Customers. Reclamation determines this charge. Historically, Reclamation has chosen to charge Project Use Customers the same rate as Western charges its firm power Customers. Project Use Customers will see an increase of 10 percent because their energy allocations have not been reduced like firm electric service Customers.

H. *Comment:* A Customer stated that Reclamation's Upper Colorado Region's Project Use rate (UCP–2) should not be increased so that it equals the proposed SLCA/IP rate. The Customer further stated that the practice of having Reclamation's rate equaling the SLCA/IP rate should be discontinued and that participating irrigation projects should be given relief from the proposed rate increase.

Response: Project Use Customers are currently charged under Reclamation rate schedule UCP–2. Reclamation determines this rate.

I. *Comment:* Some Customers commented that much of the impetus for the proposed rate increase stems from the acceleration of the pinch-point year from FY 2060 to FY 2025.

Response: The change in the pinch point is not a cause for the rate increase. The current SLCA/IP firm power rate PRS has two pinch-point years, the dominant one in FY 2060 and a secondary one in FY 2025. These pinch points are caused by project repayment obligations. These obligations stem mostly from requirements of the CUP Bonneville Unit irrigation blocks.

In the current Ratesetting PRS, repayment of the Duchesne block of the Bonneville Unit is due in FY 2025 and amounts to $104.8 million. The Southern Utah County and Juab-Mona-Nephi blocks come due with obligations of $152.3 million and $205.6 million in FY 2057 and FY 2060, respectively.

As a result of the changes in the final DPR, the revised Ratesetting PRS shows that the Duchesne block due in FY 2025 is reduced to $97.5 million, and the Southern Utah County and Juab-Mona-Nephi blocks are replaced by the Starvation block of $13.7 million in FY 2055, the Southern Utah County block of $91.2 million in FY 2057, and the Uintah Basin Replacement block of $11.4 million also in FY 2057.

In summary, the Duchesne block is reduced by $7.3 million in FY 2025, and the other blocks in and around FYs 2055–2060 are reduced by $241.6 million, from $357.9 million to $116.3 million.

These changes cause the Duchesne block of $97.5 million due in FY 2025 to become the primary pinch point in the revised PRS. The pinch-point year that previously occurred in FY 2060 no longer affects the rate. The FY 2025 pinch-point decrease of $7.3 million has the effect of reducing the firm power rate by 0.25 mills per kWh.

J. *Comment:* A few Customers requested that Western use the most up-to-date purchase power estimates in the PRS.

Response: The future purchased power estimates for FY 2007–2009 have been updated by using the long-term hydrology projections current as of April 13, 2005. FY 2006 purchased power estimates are based on

Reclamation's April 2005 24-month study.

2. Cost Recovery Charge

A. *Comment:* Several Customers commented that the time schedule for determining if they wanted to request a waiver of the CRC was too short; they suggested that they be given at least 1 month to respond.

Response: Western agrees and has changed the schedule. The CRC notice will be provided to the Customers on May 1 of each year, and the Customers will have until June 15 of each year to request a waiver.

B. *Comment:* A Customer suggested the CRC be added to the base rate so there would be a single energy rate.

Response: Western will apply the CRC only when it is needed during financial hardship situations. This approach is beneficial to the Customers because the Customers can avoid the CRC by taking less energy.

C. *Comment:* Several Customers expressed concern that the CRC should be tied to purchase power costs only instead of all costs. They are concerned that Reclamation and Western will be able to put other expenses into the CRC.

Response: The expenses that are included in the CRC calculation are Congressional Budget amounts for that current year. These expenses have been reviewed by the Customers, OMB, and Congress each year. Specifically, by Attachment No. 5 of the SLCA/IP contracts, Customers participate in the WPR. Western and Reclamation will continue to consult with Customers on program cost and formulate work plans through the review process. A PRS is calculated each year to determine if the current rate is sufficient to repay all costs within the allowable time period throughout the ratesetting period. If not, then Western will begin a rate process.

D. *Comment:* A Customer commented that the composite rate had been approximately 28 mills/kWh in previous proposals; but after the CRC was proposed, the composite rate dropped to approximately 25 mills/kWh. The Customer asked how much of that drop was attributable to the CRC proposal versus changes in cost.

Response: The composite rate was projected to be 28.65 mills/kWh during the informal rate process; it is now 25.28 mills/kWh. This is a difference of 3.37 mills/kWh. A reduction in aid-to-irrigation costs reduced the rate by .25 mills/kWh. The remaining 3.12 mills/kWh reduction was primarily due to lower purchase power costs estimates. In the proposed Ratesetting PRS, purchased power expense beyond the initial 5-year, cost-evaluation period has been reduced in anticipation that return-to-normal water conditions will result in Western meeting its firm power commitments through hydropower generation. In addition, Western has provided notice to its Customers that it may change the SHP allocations in FY 2009 to where little or no purchased power costs will be necessary except for operational purposes.

E. *Comment:* A Customer asked for clarification of Western's 3-year strategic purchase plan for firming energy. The Customer also asked if Customer input would be involved before making these purchases.

Response: In order to guard against rising energy prices, Western is considering making some purchases on a 3-year cycle. Western will consult with Customers when developing the details of this plan.

F. *Comment:* A Customer group suggested that the BFTB should not be fixed at $30 million. The BFTB should be a fluid number that would change with varying circumstances (e.g. hydrology, market prices, replacements, non-reimbursable expenses, etc.). Another Customer noted that rather than maintaining the lower limit of the Basin Fund at $30 million, the Basin Fund could be set at $15 million during drought periods to help stabilize rates and provide additional firming energy during drought conditions.

Response: Western agrees that the BFTB should vary based on financial conditions and, therefore, has revised the BFTB to be 15 percent of the total cash-outlay target for the upcoming FY, but not less than $20 million. For example, FY 2006 forecasted expenses are $151 million. Fifteen percent of this sum is $22.7 million. The calculated amount will be included in the yearly CRC proposal sent to the Customers on May 1 of each year.

G. *Comment:* Several Customers requested that non-reimbursable costs included in the CRC's annual-projected expenses be reduced to zero before any reduction in purchase power expense occurred. Another Customer stated that the CRC discriminates against Customers and is arbitrary because it only reduces purchase power costs, while other controllable costs, such as non-reimbursable expenses, are given priority at the expense of Customers paying higher rates.

Response: The CRC was developed to help reduce financial hardship in the Basin Fund; therefore, all revenues and all expenses need to be considered when determining the CRC. Western recognizes that non-reimbursable expenses can have considerable impact on the CRC rate and, therefore, has revised its formula to cap the non-reimbursable expense included in the CRC calculation at $25 million each year, plus the cost of inflation. The CRC is charged to all Customers receiving their full SHP entitlements. Western will grant a waiver of the CRC to those Customers who voluntarily schedule no more than their proportionate share of the energy at the WL for a given year. Granting a waiver to an individual Customer neither increases nor decreases the CRC charge to other Customers.

H. *Comment:* A few Customers believe that the purpose of the CRC is to market a hydro-only product, stating it is a change from the traditional rate method and departs from SHP allocations. They believe that the CRC also circumvents the rates process so that rates can be changed without a public rate process.

Response: The CRC provides Western the ability to pay for the firming energy necessary to meet its contractual obligations while still maintaining an appropriate cash balance in the Basin Fund. Since Western is obligated to provide the contracted amount of energy, this is a firm product. Western will continue, as required by DOE regulations, to calculate a PRS each year to determine if the rates are sufficient to recover costs. If it is necessary to adjust the rate, Western will begin a rate process. All historical and future expenses will continue to be included in the PRS as in the past.

I. *Comment:* A Customer stated that the CRC makes it appear as if there are sufficient funds to cover all costs.

Response: In any year, the Basin Fund must have sufficient revenues to cover all costs. The CRC is developed to help ensure that a minimum balance is maintained and that the Basin Fund does not deplete rapidly. Western believes this is a positive step to help alleviate Basin Fund cash balance concerns.

J. *Comment:* Some Customers asked Western to abandon the CRC and instead offer a contract to those Customers who want hydro only.

Response: In order to offer a hydro only contract, Western would need to reopen the contracts and the Post-2004 Marketing Plan. These are not actions that are warranted at this time. Western will continue to market the SLCA/IP as described in the Post-2004 Marketing Plan. The CRC is designed to allow Customers some flexibility to choose if they want reduced energy deliveries rather than pay a higher cost for some of the firming expenses. The CRC helps maintain a certain minimum level in the Basin Fund and also protects the Basin

Fund from dramatic reductions in any given year. The CRC also assumes that the base rate is not affected by the Basin Fund balance. Western will continue to firm SHP as necessary. However, under certain financial hardship conditions, as determined by the CRC formulas, it may be necessary to implement the CRC to ensure sufficient revenue so that Western can meet its SHP obligation.

K. *Comment:* A few Customers believe the WL can go below the HE if the costs are increased.

Response: The WL will not be less than the HE. Western has corrected the CRC formula to prevent this from occurring.

L. *Comment:* A Customer commented that implementation of the CRC must also include a complete review process so Customers have safeguards to ensure that cost recovery is limited only to the purpose for which the CRC was intended and that the CRC only be used in extreme circumstances.

Response: Western believes safeguards are already in place under Attachment No. 5 to the SLCA/IP contracts because Customers can participate in the WPR process each year.

M. *Comment:* A Customer commented that the CRC is not a fair method of creating a secure Basin Fund. It is particularly unfair to smaller Customers, because their limited alternative resources effectively eliminate the opportunity of opting out of the CRC.

Response: Each Customer will be allowed to make its own choice to opt out of the CRC on a yearly basis. All Customers will continue to be given the opportunity to purchase WRP if they believe that the CRC is too expensive. Western believes it is to the Customer's advantage to have a lower base rate and an occasional CRC charge than to have a higher base rate all of the time.

N. *Comment:* A Customer commented that it does not support the CRC and believes that Customers should not be required to pay a higher rate while relieving Western of its obligations to minimize other costs.

Response: The CRC will only be implemented in years in which a financial hardship exists. Western will continue to consult with Customers about controlling costs in the WPR.

O. *Comment:* A Customer commented that the CRC is a departure from historic practice. Rates have historically included purchase power costs.

Response: Purchase power costs are still included in the firm power rate. The CRC is a new approach to deal with financial hardships that focuses on the Basin Fund Cash Balance. In the past, when financial hardships have occurred, Western has consulted with Customers on passing through firming costs or reducing energy deliveries. Western believes the CRC is a more certain method of dealing with financial hardships.

P. *Comment:* A Customer commented that Western stated in its ''Notice of Determination of the Post-2004 Marketable Resources'' that the yearly energy levels would be supported by necessary firming purchases in an appropriate firm power rate and energy allocations would only be changed by giving proper notice as set forth in the contract. The Customer believes the CRC circumvents this process.

Responses: Firming purchases are included in the firm power rate, and the Customers' energy allocations will not change. The ability to obtain a waiver from the CRC will allow Customers to make their own decisions if they want to take their full SHP energy allocations or, if they would prefer, take less energy at a reduced rate.

Q. *Comment:* A Customer commented that the CRC will not result in the lowest possible rate, consistent with sound business practices.

Responses: Western believes the proposed firm power rate results in the lowest possible rate, consistent with sound business principles. The CRC will only be in place during financial hardship conditions. By adding the CRC only during these conditions, it will keep the rate lower during most years than if Western implemented a higher base rate.

R. *Comment:* A commenter suggested Western abandon the CRC and instead develop a surcharge, with the amount fixed in advance of rate implementation that would be available for Western to implement in the event a Basin Fund shortfall was forecasted.

Response: Western considers the CRC to be a superior option than a fixed surcharge. The CRC is variable in order to deal with the severity of the hardship and only charged during financial hardship conditions.

S. *Comment:* Many Customers expressed support for the CRC.

Response: Western appreciates the support it has received from the majority of Customers and believes that the CRC is a positive step to keep the Basin Fund solvent.

T. *Comment:* A commenter supported the CRC, providing that each Customer is afforded a waiver opportunity.

Response: Each May 1, all Customers will be notified if a CRC will be implemented and will be given the option to receive less energy in exchange for a waiver of the CRC for that year.

U. *Comment:* Reclamation stated that the variable nature of the CRC diminishes the collaborative ratesetting processes between the two agencies. Furthermore, the CRC should not apply to power provided to Reclamation project loads. Because the project loads have priority in the use of Federal hydropower, these should not be affected by purchase power costs.

Response: Western has no intention of changing the collaborative nature of the ratesetting process between the two agencies. Western looks forward to continuing to work with Reclamation on rate issues as it has done in the past and does not plan to change any of the processes in working with Reclamation, specifically the WPR. Western agrees that project loads should not be affected by purchase power costs and has agreed to not include Project Use loads in the CRC calculation.

Availability of Information

Information about this rate adjustment, including power repayment studies, comments, letters, memorandums, and other supporting material made or kept by Western and used to develop the provisional rates, is available for public review in the Colorado River Storage Project Management Center, Western Area Power Administration, 150 East Social Hall Avenue, Suite 300, Salt Lake City, Utah.

Regulatory Procedure Requirements

Regulatory Flexibility Analysis

The Regulatory Flexibility Act of 1980 (5 U.S.C. 601, *et seq.*) requires Federal agencies to perform a regulatory flexibility analysis if a final rule is likely to have a significant economic impact on a substantial number of small entities and there is a legal requirement to issue a general notice of proposed rulemaking. Western has determined that this action does not require a regulatory flexibility analysis since it is a rulemaking of particular applicability involving rates or services applicable to public property.

Environmental Compliance

In compliance with the National Environmental Policy Act (NEPA) of 1969 (42 U.S.C. 4321, *et seq.*); Council on Environmental Quality Regulations (40 CFR parts 1500–1508); and DOE NEPA Regulations (10 CFR part 1021), Western has determined that this action is categorically excluded from preparing an environmental assessment or an environmental impact statement.

Determination Under Executive Order 12866

Western has an exemption from centralized regulatory review under Executive Order 12866; accordingly, no clearance of this notice by the Office of Management and Budget is required.

Small Business Regulatory Enforcement Fairness Act

Western has determined that this rule is exempt from congressional notification requirements under 5 U.S.C. 801 because the action is a rulemaking of particular applicability relating to rates or services and involves matters of procedure.

Submission to the Federal Energy Regulatory Commission

The interim rates herein confirmed, approved, and placed into effect, together with supporting documents, will be submitted to the Commission for confirmation and final approval.

Order

In view of the foregoing and under the authority delegated to me, I confirm and approve on an interim basis, effective October 1, 2005, Rate Schedule SLIP–F8, for the Salt Lake City Area Integrated Projects of the Western Area Power Administration. The rate schedule shall remain in effect on an interim basis, pending the Commission's confirmation and approval of them or substitute rates on a final basis through September 30, 2010.

Dated: August 1, 2005.

Clay Sell,

Deputy Secretary.

Salt Lake City Area Integrated Projects, Arizona, Colorado, Nevada, New Mexico, Utah, Wyoming; Schedule of Rates for Firm Power Service

Effective: The first day of the first full billing period beginning on or after October 1, 2005, and extending through September 30, 2010, or until superseded by another rate schedule, whichever occurs earlier.

Available: In the area served by the Salt Lake City Area Integrated Projects.

Applicable: To the wholesale power Customer for firm power service supplied through one meter at one point of delivery, or as otherwise established by contract.

Character and Conditions of Service: Alternating current, 60 hertz, three-phase, delivered and metered at the voltages and points established by contract.

Monthly Rate:

Demand Charge: $4.43 per kilowatt of billing demand.

Energy Charge: 10.43 mills per kilowatthour of use.

Cost Recovery Charge: This charge will be recalculated annually before May 1 and Western will provide notification to the Customers. The charge, if needed, will be placed into effect from October 1 through September 30, and will be calculated as follows:

CRC CALCULATION

	Description	Formula [1]
Step One—Determine the Net Balance Available in the Basin Fund		
BFBB	Basin Fund Beginning Balance ($)	Financial forecast.
BFTB	Basin Fund Target Balance ($)	.15 * PAE (not less than $20 million).
PAR	Projected Annual Revenue ($) w/o CRC	Financial forecast.
PAE	Projected Annual Expense ($)	Financial forecast.
NR	Net Revenue ($)	PAR–PAE.
NB	Net Balance ($)	BFBB + NR.
Step Two—Determine the Forecasted Energy Purchase Expenses		
EA	SHP Energy Allocation (GWh)	Customer contracts.
HE	Forecasted Hydro Energy (GWh)	Hydrologic & generation forecast.
FE	Forecasted Energy Purchase (GWh)	EA–HE.
FFC	Forecasted Avg Energy Price per MWh($)	From commercially available price indices.
FX	Forecasted Energy Purchase Expense ($)	FE * FFC.
Step Three—Determine the Amount of Funds Available for Firming Energy Purchases, and Then Determine Additional Revenue To Be Recovered. The Following Two Formulas Will Be Used To Determine FA, the Lesser of the Two Will Be Used		
FA1	Basin Fund Balance Factor ($)	If (NB>BFBB,FX,FX –(BFTB–NB)).
FA2	Revenue Factor ($)	If (NR>.25*BFBB,FX,FX+NR+.25*BFBB).
FA	Funds Available ($)	Lesser of FA1 or FA2 (not less than $0).
FARR	Additional Revenue to be Recovered ($)	FX–FA.
Step Four—Once the FA for Purchases Have Been Determined, the CRC Can Be Calculated, and the WL Can Be Determined		
WL	Waiver Level (GWh)	If (EA<HE,EA,HE+(FE*(FA/FX))), but not less than HE.
WLP	Waiver Level Percentage of Full SHP	WL/EA*100.
CRCE	CRC Energy (GWh)	EA–WL.
CRCEP	CRC Energy Percentage of Full SHP	CRCE/EA*100.
CRC	Cost Recovery Charge (mills/kWh)	FARR/(EA*1,000).

[1] Some formulas in this table are based on standard Excel spreadsheet formatting.

Narrative of CRC Calculations

Step One: Determine the net balance available in the Basin Fund.

BFBB—Western will forecast the Basin Fund Beginning Balance for the next FY.

BFTB—Determine the Basin Fund Target Balance for the next FY. The BFTB will not be less than $20 million. The target balance is 15 percent of projected annual expenses for the coming FY.

BFTB = 0.15 * PAE

PAR—Projected Annual Revenue is Western's estimate of revenue for the next FY.

PAE—Projected Annual Expense is Western's estimate of expenses for the next FY. The PAE includes all expenses plus non-reimbursable expenses, which are capped at $25 million per year plus an inflation factor. This limitation is for CRC formula calculation purposes only, and is not a cap on actual non-reimbursable expenses.

NR—Net Revenue equals revenues minus expenses.

NR = PAR–PAE

NB—Net Balance is the Basin Fund Beginning Balance plus net revenue.

NB = BFBB + NR

Step Two: Determine the forecasted energy purchase expenses.

EA—The Sustainable Hydropower Energy Allocation. This does not include Project Use Customers.

HE—Western's forecast of Hydro Energy available during the next FY developed from Reclamation's April 24-month study.

FE—Forecasted Energy purchases are the difference between the sustainable hydropower allocation and the forecasted hydro energy available for the next FY, or the anticipated firming purchases for the next year.

FE = EA–HE

FFC—The forecasted energy price for the next FY per MWh.

FX—Forecasted energy purchase power expenses based on the current year April 24-month study, representing an estimate of the total cost of firming purchases for the coming FY.

FX = FE * FFC

Step Three: Determine the amount of Funds Available to spend on firming energy purchases, and then determine additional revenue to be recovered. The following two formulas will be used to determine FA, the lesser of the two will be used. Funds available shall not be less than zero.

A. Basin Fund Balance Factor (FA1)

The first formula ensures that the Net Balance will not go below 15 percent of the total expenses for that FY. If the Net Balance is greater than the Basin Fund Target Balance, then use the value for forecasted energy purchase power expenses. If the net balance is less than the Basin Fund Target Balance, then reduce the value of the Forecasted Energy Purchase Power Expenses by the difference between the Basin Fund Target Balance and the Net Balance.

FA1 = If (NB > BFTB, FX, FX—(BFTB–NB))

If the Net Balance is greater than the Basin Fund Target Balance, then

FA1 = FX

If the Net Balance is less than the Basin Fund Target Balance, then

FA1 = FX—(BFTB–NB)

B. Basin Fund Revenue Factor (FA2)

The second factor ensures that net revenue does not result in a loss that exceeds 25 percent of the Basin Fund Beginning Balance. If the Net Revenue is greater than minus 25 percent of the Basin Fund Beginning Balance, then use the value for forecasted energy purchase power expenses. If the Net Revenue is less than a minus 25 percent of the Basin Fund Beginning Balance, then add the Net Revenue and 25 percent of the Basin Fund Beginning Balance to the forecasted energy purchase power expenses.

FA2 = If (NR >—0.25 * BFBB, FX, FX + NR + 0.25 * BFBB)

If the Net Revenue does not result in a loss that exceeds 25 percent of the Basin Fund Beginning Balance, then

FA2 = FX

If the Net Revenue results in a loss that exceeds 25 percent of the Basin Fund Beginning Balance, then

FA2 = FX + NR + 0.25 * BFBB

FA—Determine the funds available for purchasing firming energy by using the lesser of FA1 and FA2.

FARR—Calculate the additional revenue to be recovered by subtracting the Funds Available from the forecasted energy purchase power expenses.

FARR = FX–FA

Step Four: Once the additional revenue to be recovered has been determined, the Cost Recovery Charge (CRC) can be calculated, and the Waiver Level (WL) can be determined.

A. Cost Recovery Charge (CRC)

The CRC will be a charge to recover the additional revenue required as calculated in Step 3. The CRC will apply to all Customers who choose not to request a waiver of the CRC, as discussed below. The CRC equals the additional revenue to be recovered divided by the total energy allocation to all Customers for the FY.

CRC = FARR / (EA*1,000)

B. *Waiver Level (WL)*

The WL provides Customers the ability for Western to reduce purchase power expenses by scheduling less energy than their contractual amounts. Therefore, Western will establish an energy WL. For those Customers who voluntarily schedule no more energy than their proportionate share of the WL, Western will waive the CRC for that year.

After the Funds Available have been determined, the WL will be set at the sum of the energy that can be provided through hydro generation and purchased with Funds Available. The WL will not be less than the forecasted Hydro Energy.

WL = If (EA < HE, EA, HE + (FE * (FA / FX)))

If SHP Energy Allocation is less than forecasted Hydro Energy available, then

WL = EA

If SHP Energy Allocation is greater than forecasted Hydro Energy available, then

WL = HE + (FE * (FA / FX))

Prior Year Adjustment: The CRC PYA for subsequent years will be determined by comparing the prior year's estimated firming-energy cost to the prior year's actual firming-energy cost for the energy provided above the WL. The PYA will result in an increase or decrease to a Customer's firm energy costs over the course of the following year. The table below is the calculation of a PYA.

PYA CALCULATION

	Description	Formula
Step One—Determine Actual Expenses and Purchases for Previous Year's Yirming. This Data Will be Obtained From Western's Financial Statements at the End of FY		
PFX	Prior Year Actual Firming Expenses ($)	Financial Statements.
PFE	Prior Year Actual Firming Energy (GWh)	Financial Statements.
Step Two—Determine the Actual Firming Cost for the CRC Portion		
EAC	Sum of the energy allocations of Customers subject to the PYA (GWh).	
FFC	Forecasted Firming Energy Cost—($/MWh)	From CRC Calculation.
AFC	Actual Firming Energy Cost—($/MWh)	PFX/PFE.
CRCEP	CRC Energy Percentage	From CRC Calculation.
CRCE	Purchased Energy for the CRC (GWh)	EAC*CRCEP.
Step Three—Determine Revenue Adjustment (RA) and PYA		
RA	Revenue Adjustment ($)	(AFC–FFC)*CRCE*1,000.
PYA	Prior Year Adjustment (mills/kWh)	(RA/EAC)/1,000.

Narrative PYA Calculation

Step One: Determine Actual Expenses and Purchases for Previous Year's Firming. This data will be obtained from Western's financial statements at end of FY.

PFX—Prior year actual firming expense

PFE—Prior year actual firming energy

Step Two: Determine the actual firming cost for the CRC portion.

EAC—Sum of the energy allocations of Customers subject to the PYA

CRCE—The amount of CRC Energy needed

AFC—The Actual Firming Energy Cost are the PFX divided by the PFE

AFC = (PFX / PFE) / 1,000

Step Three: Determine Revenue Adjustment (RA) and Prior Year Adjustment (PYA).

RA—The Revenue Adjustment is AFC less FFC times CRCE

RA = (AFC—FFC) * CRCE) * 1,000

PYA = The PYA is the RA divided by the EAC for the CRC Customers only.

PYA = (RA / EAC) /1,000

The Customer's PYA will be based on their prior year's energy multiplied by the resulting mills/kWh to determine the dollar amount that will be assessed. The Customer will be charged or credited for this dollar amount equally in the remaining months of the next year's billing cycle. Western will attempt to complete this calculation by December of each year. Therefore, if the PYA is calculated in December, the charge/credit will be spread over the remaining 9 months of the FY (January through September).

Billing Demand:

The billing demand will be the greater of:

1. The highest 30-minute integrated demand measured during the month up to, but not more than, the delivery obligation under the power sales contract, or

2. The Contract Rate of Delivery.

Billing Energy:

The billing energy will be the energy measured during the month up to, but not more than, the delivery obligation under the power sales contract.

Adjustment for Waiver:

Customers can choose not to take the full SHP energy supplied as determined in the attached formulas for CRC, and they will be billed the Energy and Capacity rates listed above, but not the CRC.

Adjustment for Transformer Losses:

If delivery is made at transmission voltage but metered on the low-voltage side of the substation, the meter readings will be increased to compensate for transformer losses as provided in the contract.

Adjustment for Power Factor:

The Customer will be required to maintain a power factor at all measurement points between 95 percent lagging and 95 percent leading.

Adjustment for Western Replacement Power:

Under the Customer's Firm Electric Service Contract, as amended, Western will bill the Customer for its proportionate share of the costs of Western Replacement Power (WRP) within a given time period. Western will include in the Customer's monthly power bill the WRP cost and the incremental administrative costs associated with WRP.

Adjustment for Customer Displacement Power Administrative Charges:

Western will include in the Customer's regular monthly power bill the incremental administrative costs associated with CDP.

Certification of Rates

Colorado River Storage Project Management Center Salt Lake City Area Integrated Projects

I certify that Rate Schedule SLIP-F8 developed for the Salt Lake City Area Integrated Projects is consistent with applicable laws and that the rates are the lowest possible consistent with sound business principles.

Dated: July 5, 2005.

Michael S. Hacskaylo,

Administrator.

[FR Doc. 05–16044 Filed 8–12–05; 8:45 am]

BILLING CODE 6450–01–P

ENVIRONMENTAL PROTECTION AGENCY

[RCRA–2005–0013, FRL–7951–9]

Agency Information Collection Activities: Proposed Collection; Comment Request; Notification of Regulated Waste Activity, EPA ICR Number 0261.15, OMB Control Number 2050–0028

AGENCY: Environmental Protection Agency.

ACTION: Notice.

SUMMARY: In compliance with the Paperwork Reduction Act (44 U.S.C. 3501 *et seq.*), this document announces that EPA is planning to submit a continuing Information Collection Request (ICR) to the Office of Management and Budget (OMB). This is a request of an existing approved collection. This ICR is scheduled to

expire on January 31, 2006. Before submitting the ICR to OMB for review and approval, EPA is soliciting comments on specific aspects of the proposed information collection as described below.

DATES: Comments must be submitted on or before October 14, 2005.

ADDRESSES: Submit your comments, referencing docket ID number RCRA–2005–0013, to EPA online using EDOCKET (our preferred method), by e-mail to *RCRA-docket@epa.gov*, or by mail to: EPA Docket Center, Environmental Protection Agency, RCRA Docket, mail code 5305T, 1200 Pennsylvania Ave., NW., Washington, DC 20460.

FOR FURTHER INFORMATION CONTACT: Toshia King, Office of Solid Waste, mailcode 5303W, Environmental Protection Agency, 1200 Pennsylvania Ave., NW., Washington, DC 20460; telephone number: 703–308–7033; fax number: 703–308–8617; e-mail address: *king.toshia@epa.gov*.

SUPPLEMENTARY INFORMATION: EPA has established a public docket for this ICR under Docket ID number RCRA–2005–0013, which is available for public viewing at the RCRA Docket in the EPA Docket Center (EPA/DC), EPA West, Room B102, 1301 Constitution Ave., NW., Washington, DC. The EPA Docket Center Public Reading Room is open from 8:30 a.m. to 4:30 p.m., Monday through Friday, excluding legal holidays. The telephone number for the Reading Room is (202) 566–1744, and the telephone number for the RCRA Docket is (202) 566–0270. An electronic version of the public docket is available through EPA Dockets (EDOCKET) at *http://www.epa.gov/edocket*. Use EDOCKET to obtain a copy of the draft collection of information, submit or view public comments, access the index listing of the contents of the public docket, and to access those documents in the public docket that are available electronically. Once in the system, select ''search,'' then key in the docket ID number identified above.

Any comments related to this ICR should be submitted to EPA within 60 days of this notice. EPA's policy is that public comments, whether submitted electronically or in paper, will be made available for public viewing in EDOCKET as EPA receives them and without change, unless the comment contains copyrighted material, CBI, or other information whose public disclosure is restricted by statute. When EPA identifies a comment containing copyrighted material, EPA will provide a reference to that material in the version of the comment that is placed in EDOCKET. The entire printed comment, including the copyrighted material, will be available in the public docket. Although identified as an item in the official docket, information claimed as CBI, or whose disclosure is otherwise restricted by statute, is not included in the official public docket, and will not be available for public viewing in EDOCKET. For further information about the electronic docket, see EPA's **Federal Register** notice describing the electronic docket at 67 FR 38102 (May 31, 2002), or go to *http://www.epa.gov./edocket*.

Affected Entities: Business or other for profit.

Title: Notification of Regulated Waste Activity.

Abstract: Section 3010 of Subtitle C of RCRA, as amended, requires any person who generates or transports regulated waste or who owns or operates a facility for the treatment, storage, or disposal (TSD) of regulated waste to notify EPA of their activities, including the location and general description of activities and the regulated wastes handled. The facility is then issued an EPA Identification number. The facilities are required to use the Notification Form (EPA Form 8700–12) to notify EPA of their hazardous waste activities. EPA needs this information to determine the universe of persons who generate, handle, and manage these regulated wastes; assign EPA Identification Numbers; and ensure that these regulated wastes are managed in a way that protects human health and the environment, as required by RCRA, as amended.

EPA enters notification information submitted by respondents into the EPA National data base and assigns EPA Identification Numbers. EPA uses the information primarily for tracking purposes, and secondarily for a variety of enforcement and inspection purposes. In addition, EPA uses this information to identify the universe of regulated waste generators, handlers, and managers and their specific regulated waste activities. Finally, EPA uses this information to ensure that regulated waste is managed properly, that statutory provisions are upheld, and that regulations are adhered to by facility owners or operators.

Section 3007(b) of RCRA and 40 CFR part 2, subpart B, which defines EPA's general policy on public disclosure of information, both contain provisions for confidentiality. However, the Agency does not anticipate that businesses will assert a claim of confidentiality covering all or part of the Notification of Regulated Waste Activity. If such a claim were asserted, EPA must and will treat the information in accordance with the regulations cited above. EPA also will assure that this information collection complies with the Privacy Act of 1974 and OMB Circular 108.

An agency may not conduct or sponsor, and a person is not required to respond to, a collection of information unless it displays a currently valid OMB control number. The OMB control numbers for EPA's regulations in 40 CFR are listed in 40 CFR part 9.

The EPA would like to solicit comments to:

(i) evaluate whether the proposed collection of information is necessary for the proper performance of the functions of the Agency, including whether the information will have practical utility;

(ii) evaluate the accuracy of the Agency's estimate of the burden of the proposed collection of information, including the validity of the methodology and assumptions used;

(iii) enhance the quality, utility, and clarity of the information to be collected; and

(iv) minimize the burden of the collection of information on those who are to respond, including through the use of appropriate automated electronic, mechanical, or other technological collection techniques or other forms of information technology, *e.g.*, permitting electronic submission of responses.

Burden Statement: The annual public reporting and recordkeeping burden for this collection of information is estimated to average about 4 hours per respondent for initial notifications and about 2 hours per respondent for subsequent notifications. The estimates for the notification ICR include all aspects of the information collection including time for reviewing instructions, searching existing data sources, gathering data, and completing and reviewing the form.

Estimated Number of Respondents: 31,125.

Frequency of Response: On occasion.

Estimated Total Annual Hour Burden: 96,250 hours.

Estimated Total Annualized Capital, Operating/Maintenance Cost Burden: $130,725.

Burden means the total time, effort, or financial resources expended by persons to generate, maintain, retain, or disclose or provide information to or for a Federal agency. This includes the time needed to review instructions; develop, acquire, install, and utilize technology and systems for the purposes of collecting, validating, and verifying information, processing and maintaining information, and disclosing and providing information; adjust the

existing ways to comply with any previously applicable instructions and requirements; train personnel to be able to respond to a collection of information; search data sources; complete and review the collection of information; and transmit or otherwise disclose the information.

Dated: August 8, 2005.

Matt Hale,

Director, Office of Solid Waste.

[FR Doc. 05–16110 Filed 8–12–05; 8:45 am]

BILLING CODE 6560–50–P

ENVIRONMENTAL PROTECTION AGENCY

[FRL–7952–4]

Proposed Settlement Agreement, Clean Air Act Citizen Suit

AGENCY: Environmental Protection Agency (EPA).

ACTION: Notice of Proposed Settlement Agreement; request for public comment.

SUMMARY: In accordance with section 113(g) of the Clean Air Act, as amended (''Act''), 42 U.S.C. 7413(g), notice is hereby given of a proposed settlement agreement to address a lawsuit filed by the Interstate Natural Gas Association of America: *Interstate Natural Gas Association of America* v. *EPA,* No. 04–1296 (DC Cir.). On September 1, 2004, the Interstate Natural Gas Association of America (''Petitioner'') filed a Petition for Review of EPA's final rule pursuant to 42 U.S.C. 7607 and Rule 15 of the Federal Rules of Appellate Procedure. Petitioner challenged the EPA's final rule entitled ''Standards of Performance for Stationary Gas Turbines'' published on July 8, 2004 (69 FR 41346). The standards of performance for stationary gas turbines are set forth in 40 CFR part 60, subpart GG. Under the terms of the proposed settlement agreement, EPA will undertake rulemaking to make certain amendments to the rule at issue. No later than 60 days after the date this Agreement becomes final, EPA shall sign either a notice of proposed rulemaking or a notice of direct final rulemaking and concurrent proposal to amend certain provisions of 40 CFR 60.334 and 60.335. The amendments to these sections of subpart GG will be made in order to clarify our intent that nothing in the amendments to subpart GG was meant to impose new requirements for turbines constructed after 1977, when subpart GG was initially promulgated, that do not use water or steam injection to control NO_X emissions.

DATES: Written comments on the proposed settlement agreement must be received by September 14, 2005.

ADDRESSES: Submit your comments, identified by docket ID number OAR–2002–0053, online at *http://www.epa.gov/edocket* (EPA's preferred method); by e-mail to *oei.docket@epa.gov;* mailed to EPA Docket Center, Environmental Protection Agency, Mailcode: 2822T, 1200 Pennsylvania Ave., NW., Washington, DC 20460–0001; or by hand delivery or courier to EPA Docket Center, EPA West, Room B102, 1301 Constitution Ave., NW., Washington, DC, between 8:30 a.m. and 4:30 p.m. Monday through Friday, excluding legal holidays. Comments on a disk or CD–ROM should be formatted in Wordperfect or ASCII file, avoiding the use of special characters and any form of encryption, and may be mailed to the mailing address above.

FOR FURTHER INFORMATION CONTACT: Thomas W. Swegle, Air and Radiation Law Office (2344A), Office of General Counsel, U.S. Environmental Protection Agency, 1200 Pennsylvania Ave., NW., Washington, DC 20460; telephone: (202) 564–5546.

SUPPLEMENTARY INFORMATION:

I. Additional Information About the Proposed Settlement

Petitioner filed a petition for review of EPA's final rule entitled ''Standards of Performance for Stationary Gas Turbines'' 69 FR 41346 (July 8, 2004), challenging the final rule. The final rule consisted of amendments to several sections of the standards of performance in 40 CFR part 60, subpart GG that were promulgated to codify several alternative testing and monitoring procedures that have been routinely approved by EPA Once implemented the Settlement Agreement (the ''Agreement'') would resolve the petition for review. The Agreement, which is subject to section 113(g) of the Clean Air Act, provides that EPA shall sign either a notice of proposed rulemaking or a notice of direct final rulemaking and concurrent proposal to amend provisions at 40 CFR 60.334(c), (e), (f) and (j) and 60.335(b)(8) relating to the monitoring of certain turbines that do not use water or steam injection to control NO_X emissions. The amendments will clarify that nothing in the provisions of subpart GG was meant to impose new monitoring requirements for turbines that do not use water or steam injection to control NO_X emissions. Owners and operators of existing and new turbines may use monitoring that meets the pre-existing monitoring requirements of subpart GG. In addition, the regulations as amended under the terms of the Agreement will describe a number of acceptable compliance monitoring options that owners and operators may elect to use for these units.

For a period of thirty (30) days following the date of publication of this notice, the Agency will receive written comments relating to the proposed Agreement from persons who were not named as parties or interveners to the litigation in question. EPA or the Department of Justice may withdraw or withhold consent to the proposed Agreement if the comments disclose facts or considerations that indicate that such consent is inappropriate, improper, inadequate, or inconsistent with the requirements of the Act. Unless EPA or the Department of Justice determine, based on any comment which may be submitted, that consent to the Agreement should be withdrawn, the terms of the Agreement will be affirmed.

II. Additional Information About Commenting on the Proposed Settlement

A. How Can I Get a Copy of the Settlement Agreement?

EPA has established an official public docket for this action under Docket ID No. OAR–2002–0053 which contains a copy of the Settlement Agreement. The official public docket is available for public viewing at the Office of Environmental Information (OEI) Docket in the EPA Docket Center, EPA West, Room B102, 1301 Constitution Ave., NW., Washington, DC. The EPA Docket Center Public Reading Room is open from 8:30 a.m. to 4:30 p.m., Monday through Friday, excluding legal holidays. The telephone number for the Public Reading Room is (202) 566–1744, and the telephone number for the OEI Docket is (202) 566–1752.

An electronic version of the public docket is available through EPA's electronic public docket and comment system, EPA Dockets. You may use EPA Dockets at *http://www.epa.gov/edocket/* to submit or view public comments, access the index listing of the contents of the official public docket, and to access those documents in the public docket that are available electronically. Once in the system, select ''search,'' then key in the appropriate docket identification number.

It is important to note that EPA's policy is that public comments, whether submitted electronically or in paper, will be made available for public viewing in EPA's electronic public

docket as EPA receives them and without change, unless the comment contains copyrighted material, CBI, or other information whose disclosure is restricted by statute. Information claimed as CBI and other information whose disclosure is restricted by statute is not included in the official public docket or in EPA's electronic public docket. EPA's policy is that copyrighted material, including copyrighted material contained in a public comment, will not be placed in EPA's electronic public docket but will be available only in printed, paper form in the official public docket. Although not all docket materials may be available electronically, you may still access any of the publicly available docket materials through the EPA Docket Center.

B. How and to Whom Do I Submit Comments?

You may submit comments as provided in the **ADDRESSES** section. Please ensure that your comments are submitted within the specified comment period. Comments received after the close of the comment period will be marked ''late.'' EPA is not required to consider these late comments.

If you submit an electronic comment, EPA recommends that you include your name, mailing address, and an e-mail address or other contact information in the body of your comment and with any disk or CD–ROM you submit. This ensures that you can be identified as the submitter of the comment and allows EPA to contact you in case EPA cannot read your comment due to technical difficulties or needs further information on the substance of your comment. Any identifying or contact information provided in the body of a comment will be included as part of the comment that is placed in the official public docket, and made available in EPA's electronic public docket. If EPA cannot read your comment due to technical difficulties and cannot contact you for clarification, EPA may not be able to consider your comment.

Your use of EPA's electronic public docket to submit comments to EPA electronically is EPA's preferred method for receiving comments. The electronic public docket system is an ''anonymous access'' system, which means EPA will not know your identity, e-mail address, or other contact information unless you provide it in the body of your comment. In contrast to EPA's electronic public docket, EPA's electronic mail (e-mail) system is not an ''anonymous access'' system. If you send an e-mail comment directly to the Docket without going through EPA's electronic public docket, your e-mail address is automatically captured and included as part of the comment that is placed in the official public docket, and made available in EPA's electronic public docket.

Dated: August 5, 2005.

Richard B. Ossias,

Acting Associate General Counsel, Air and Radiation Law Office, Office of General Counsel.

[FR Doc. 05–16112 Filed 8–12–05; 8:45 am]

BILLING CODE 6560–50–P

FEDERAL RESERVE SYSTEM

Change in Bank Control Notices; Acquisition of Shares of Bank or Bank Holding Companies; Correction

This notice corrects a notice (FR Doc. 05-15502) published on page 45391 of the issue for Friday, August 5, 2005.

Under the Federal Reserve Bank of Kansas City heading, the entry for Kenneth D. Klehm, Edmond, Oklahoma, and G. Blake Hogan, Houston, Texas, as trustees of the William M. Cameron 2004 Family Trusts, Oklahoma City, Oklahoma; and John W. Rex and Theodore M. Elam, as trustees of the Lynda L. Cameron 2004 Trust, all of Oklahoma City, Oklahoma, is revised to read as follows:

A. Federal Reserve Bank of Kansas City (Donna J. Ward, Assistant Vice President) 925 Grand Avenue, Kansas City, Missouri 64198-0001:

1. The William M. Cameron 2004 Family Trust, Oklahoma City, Oklahoma, and its trustees, Kenneth D. Klehm, Edmond, Oklahoma, and G. Blake Hogan, Houston, Texas; and the Lynda L. Cameron 2004 Trust, and its trustees John W. Rex and Theodore M. Elam, all of Oklahoma City, Oklahoma; to retain voting shares of First Fidelity Bancorp, Inc., and thereby indirectly retain voting shares of First Fidelity Bank, National Association, both of Oklahoma City, Oklahoma.

Comments on this application must be received by August 19, 2005.

Board of Governors of the Federal Reserve System,August 9, 2005.

Robert deV. Frierson,

Deputy Secretary of the Board.

[FR Doc. 05–16088 Filed 8–12–05; 8:45 am]

BILLING CODE 6210–01–S

FEDERAL RESERVE SYSTEM

Change in Bank Control Notices; Acquisition of Shares of Bank or Bank Holding Companies

The notificants listed below have applied under the Change in Bank Control Act (12 U.S.C. 1817(j)) and § 225.41 of the Board's Regulation Y (12 CFR 225.41) to acquire a bank or bank holding company. The factors that are considered in acting on the notices are set forth in paragraph 7 of the Act (12 U.S.C. 1817(j)(7)).

The notices are available for immediate inspection at the Federal Reserve Bank indicated. The notices also will be available for inspection at the office of the Board of Governors. Interested persons may express their views in writing to the Reserve Bank indicated for that notice or to the offices of the Board of Governors. Comments must be received not later than August 29, 2005.

A. Federal Reserve Bank of Kansas City (Donna J. Ward, Assistant Vice President) 925 Grand Avenue, Kansas City, Missouri 64198-0001:

1. Basil G. Taylor, Danna Taylor, Tacy Nitzel, Larry Parson and Lori Parsons, all of Watonga, Oklahoma, to acquire voting shares of First State Bancorporation of Watonga, Inc., and thereby indirectly acquire voting shares of First State Bank, both of Watonga, Oklahoma.

Board of Governors of the Federal Reserve System, August 9, 2005.

Robert deV. Frierson,

Deputy Secretary of the Board.

[FR Doc. 05–16090 Filed 8–12–05; 8:45 am]

BILLING CODE 6210–01–S

FEDERAL RESERVE SYSTEM

Formations of, Acquisitions by, and Mergers of Bank Holding Companies

The companies listed in this notice have applied to the Board for approval, pursuant to the Bank Holding Company Act of 1956 (12 U.S.C. 1841 *et seq.*) (BHC Act), Regulation Y (12 CFR Part 225), and all other applicable statutes and regulations to become a bank holding company and/or to acquire the assets or the ownership of, control of, or the power to vote shares of a bank or bank holding company and all of the banks and nonbanking companies owned by the bank holding company, including the companies listed below.

The applications listed below, as well as other related filings required by the Board, are available for immediate inspection at the Federal Reserve Bank indicated. The application also will be available for inspection at the offices of the Board of Governors. Interested persons may express their views in writing on the standards enumerated in the BHC Act (12 U.S.C. 1842(c)). If the proposal also involves the acquisition of a nonbanking company, the review also

includes whether the acquisition of the nonbanking company complies with the standards in section 4 of the BHC Act (12 U.S.C. 1843). Unless otherwise noted, nonbanking activities will be conducted throughout the United States. Additional information on all bank holding companies may be obtained from the National Information Center website at *www.ffiec.gov/nic/*.

Unless otherwise noted, comments regarding each of these applications must be received at the Reserve Bank indicated or the offices of the Board of Governors not later than September 18, 2005.

A. Federal Reserve Bank of Cleveland (Cindy West, Manager) 1455 East Sixth Street, Cleveland, Ohio 44101-2566:

1. Rurban Financial Corp., Defiance, Ohio; to merge with Exchange Bancshares, Inc., and thereby acquire The Exchange Bank, both of Luckey, Ohio.

Board of Governors of the Federal Reserve System, August 9, 2005.

Robert deV. Frierson,

Deputy Secretary of the Board.

[FR Doc. 05–16089 Filed 8–12–05; 8:45 am]

BILLING CODE 6210–01–S

DEPARTMENT OF HEALTH AND HUMAN SERVICES

National Institutes of Health

Proposed Collection; Comment Request; Field Test of the Discovering the Science of Alcohol Curriculum

Summary: In compliance with the requirement of Section 3506(c)(2)(A) of the Paperwork Reduction Act of 1995, regarding the opportunity for public comment on proposed data collection projects, the National institute on Alcohol Abuse and Alcoholism (NIAAA), the National Institutes of Health (NIH) will publish periodic summaries of proposed projects submitted to the Office of Management and Budget (OMB) for review and approval.

Proposed Collection: Title: Field Test of the Discovering the Science of Alcohol Curriculum. *Type of Information Collection Request:* New. *Need and Use of Information Collection:* The Discovering the Science of Alcohol curriculum (DSA) was developed with a Phase II SBIR grant to bring accurate, research-based information to high school students in biology and science classrooms. The curriculum includes standards-based content objectives and assessment activities. Curriculum materials include a teacher's guide and website. The field test is necessary to estimate the DSA curriculum's effectiveness in conveying information to students and teachers. Specifically, the field study is designed to enable NIAAA to determine whether teachers and students who complete the DSA curriculum demonstrate significantly greater knowledge of the topics covered in the curriculum than teachers and students who do not use the DSA curriculum. In addition, the study is designed to enable NIAAA to determine whether the students who are exposed to the curriculum components self-report different beliefs, attitudes, and intentions regarding alcohol use than their counterparts who are not exposed to the curriculum at their schools.

Participating in this field test will be an experimental group of 30 high school biology classrooms with a total of approximately 400 to 500 students and a control group of 30 high school biology classrooms with approximately 400 to 500 students. Teachers and students from grades 9, 10, 11, and 12 will comprise both groups. The field test will include two surveys: (1) An online, computerized survey that measures teachers' knowledge of the DSA curriculum components and teacher satisfaction with the DSA curriculum components. (2) For students, an anonymous, online, computerized survey that measures three factors: (a) student knowledge of the DSA components, (b) student attitudes, beliefs, and intentions, and (c) student satisfaction with the DSA curriculum components. *Frequency of response:* Once per respondent. *Affected Public:* Individuals. *Type of Respondents:* Biology/Science teachers and high school students.

The reporting burden is as follows: *Estimated Number of Respondents:* It is estimated that we will be able to recruit approximately 60 teachers and approximately 1000 students. *Estimated Number of Responses per Respondent:* One response per respondent. *Average Burden Hours per Response:* 15 minutes per individual in the control group and 30 minutes per individual in the experimental group, for a total respondent burden of 662.5 hours. *Estimated Total Annual Burden Hours Requested:* 662.5 hours. *Estimated Costs to Respondents:* Assuming an hourly rate of $22 for teachers, we estimate the total costs to be $825. There are no Capital Costs to report. There are no Operating or Maintenance costs to report.

Request for Comments: Written comments and suggestions from the public and affected agencies are invited on the following points: (1) Whether the data collection is necessary for the proper performance of the function of the agency, including whether the information will have practical utility; (2) the accuracy of the agency's estimate of the burden of the proposed collection of information, including the validity of the methodology and assumptions; (3) ways to enhance the quality, utility, and clarity of the information to be collected; and (4) ways to minimize the burden of the collection of information on those who are to respond, including the use of appropriate automated, electronic, mechanical, or other technological collection techniques or other forms of information technology.

For further information contact: To request more information on the proposed project or to obtain a copy of the data collection plans and instruments, contact Jason Lazarow, M.Ed., NIH/NIAAA/ORTC/HSEB, 5635 Fishers Lane, Room 3101, MSC 9304, Bethesda, MD 20892–9304, or e-mail your request to: *jlazarow@mail.nih.gov.* Mr. Lazarow can be contacted by telephone at 301–435–8043.

Comments Due Date: Comments regarding this information collection are best assured of having their full effect if received within 60 days of the date of this publication.

Dated: August 8, 2005.

Stephen Long,

Executive Officer, NIAAA.

[FR Doc. 05–16139 Filed 8–12–05; 8:45 am]

BILLING CODE 4140–01–M

DEPARTMENT OF HEALTH AND HUMAN SERVICES

National Institutes of Health

Government-Owned Inventions; Availability for Licensing

AGENCY: National Institutes of Health, Public Health Service, DHHS.

ACTION: Notice.

SUMMARY: The inventions listed below are owned by an agency of the U.S. Government and are available for licensing in the U.S. in accordance with 35 U.S.C. 207 to achieve expeditious commercialization of results of federally-funded research and development. Foreign patent applications are filed on selected inventions to extend market coverage for companies and may also be available for licensing.

ADDRESSES: Licensing information and copies of the U.S. patent applications listed below may be obtained by writing to the indicated licensing contact at the Office of Technology Transfer, National Institutes of Health, 6011 Executive

Boulevard, Suite 325, Rockville, Maryland 20852–3804; telephone: 301/496–7057; fax: 301/402–0220. A signed Confidential Disclosure Agreement will be required to receive copies of the patent applications.

Transgenic Mice in which the Gene for MCP–1 is Deleted

Teizo Yoshimura (NCI).
HHS Reference No. E–241–2005/0—Research Tool.
Licensing Contact: Susan S. Rucker; 301/435–4478; *ruckersu@mail.nih.gov*.

Dr. Yoshimura has developed a transgenic mouse which does not express the chemokine MCP–1 due to a deletion of the gene for MCP–1. MCP–1 is a CC chemokine which is responsible for recruiting monocytes into sites of inflammation and cancer. Using a thioglycollate challenge as a measure of the impact of the deletion of MCP–1, MCP–1 deficient mice exhibit a 60% reduction in the number of monocytes/macrophages at 96 hours compared to wild type mice. Although the gene for MCP–1 has been deleted the expression of the neighboring gene for MCP–3 is unaffected. This mouse may be useful as an in vivo model for evaluating the role of MCP–1 in cancer or other diseases associated with inflammation due to the accumulation of monocytes.

This work has not yet been published. These mice are not the subject of any patent or patent application filed by the NIH and are available under a biological materials license.

In addition to licensing, the technology is available for further development through collaborative research opportunities with the inventors.

Monoclonal Antibody to the Protein NCOA6 (Also Called ASC–2, AIB–3)

Paul S. Meltzer (NHGRI).
HHS Reference No. E–168–2005/0—Research Tool.
Licensing Contact: Mojdeh Bahar; 301/435–2950; *baharm@mail.nih.gov*.

The invention relates to monoclonal antibodies that bind to the transcription factor NCOA6 (ASC–2, AIB–3, TRB, TRAP250, NRC). The antibodies have proven successful reagents for Western blotting and for purifying complexes containing NCOA6. The Western blot experiments revealed that NCOA6 is over-expressed in several breast cancer cell lines, and the purification experiments identified a protein complex containing NCOA6 (the ASCOM complex). The monoclonal antibodies may be useful reagents for studying the role of NCOA6 in transcription and for studying the ASCOM complex. Additional information on the antibodies can be found in Goo *et al.* (2003) Mol Cell Biol 23:140–9 and Lee *et al.* (1999) J Biol Chem 274:34283–93.

In addition to licensing, the technology is available for further development through collaborative research opportunities with the inventors.

An Enzymatic Reagent for Removing C-Terminal Polyhistidine Tags From Recombinant Proteins

David S. Waugh (NCI).
HHS Reference No. E–162–2005/0—Research Tool.
Licensing Contact: Mojdeh Bahar; 301/435–2950; *baharm@mail.nih.gov*.

The technology is a new method for removing affinity tags from fusion proteins. Affinity tags are commonly used to purify recombinant proteins, but the tag's influence on the protein is usually unknown. Accordingly, removal of the affinity tag is often desired prior to functional or structural studies.

In contrast to tags added to the amino-terminus (N-terminal tag), removal of tags added to the carboxy-terminus (C-terminal tag) of proteins is problematic. A new carboxypeptidase capable of removing C-terminal tags has been discovered. This enzyme, MeCPA, can remove histidines and other amino acids from the C-terminus of proteins and could be used to remove affinity tags. Because MeCPA will only digest disordered/unstructured residues, it could also be used to remove native amino acids from the C-terminus of proteins to facilitate crystallization.

The inventors have cloned the gene that encodes MeCPA and over-produced the enzyme. A tagged version of MeCPA has been produced to facilitate removal of MeCPA from the products of the cleavage reaction. Background information for this invention is described in Joshi and Leger (1999) JBC 274: 9803–9811.

Induction of C/EBPalpha and Uses Thereof

Robert H. Shoemaker (NCI) *et al.*
U.S. Provisional Application filed 15 Jul 2005 (HHS Reference No. E–140–2005/0–US–01).
Licensing Contact: Michelle A. Booden; 301/451–7337; *boodenm@mail.nih.gov*.

CCAAT/enhancer binding protein alpha (C/EBPalpha) is a leucine-zipper structure transcription factor that plays a key role in regulating the differentiation and proliferation of a variety of cell types. For example, conditional expression of C/EBPalpha is sufficient to trigger neutrophilic differentiation. In addition, administration of antisense molecules against C/EBPalpha has been shown to interfere with proliferation of the late myeloblast and promyelocytic leukemic cell lines HL60 and NB4.

Dominant negative mutations of the *CEBPA* gene have been identified in a large percentage of subjects with t(8;21) acute myeloid leukemia (AML), subtypes M1 and M2. AML is a cancer of the blood and bone marrow characterized by rapid and uncontrolled growth of myelocytes and a lack of myeloid cell differentiation. Approximately 8% of all AML cases are of the t(8;21) variety. Therefore, pharmacologic modulators of C/EBPalpha may be useful as a means to induce cell differentiation, and thus limit proliferation of AML cells.

The present invention describes methods for treating various leukemic disorders by administrating compounds. Additional embodiments describe the mechanism of action of these sterol mesylate compounds through their ability to modulate C/EBPalpha. This disclosure also provides methods for screening for C/EBPalpha inducing compounds. Sterol mesylate compounds and derivatives thereof have the potential to result in more effective therapeutics for the treatment of leukemia and lymphoma.

In addition to licensing, the technology is available for further development through collaborative research opportunities with the inventors.

Use of Discoidin Domain Receptor 1 (DDR1) and Agents That Affect the DDR1/Collagen Pathway

Teizo Yoshimura (NCI).
U.S. Patent Application No. 10/507,385 filed 09 Sep 2004 (HHS Reference No. E–083–2002/2–US–02).
Licensing Contact: Jesse Kindra; 301/435–5559; *kindraj@mail.nih.gov.*

Dendritic cells (DCs) are pivotal antigen-presenting cells for initiation of an immune response. Indeed, dendritic cells provide the basis for the production of an effective immune response to a vaccine, particularly for antigens wherein conventional vaccination is inadequate. DCs are also important in the production on an immune response to tumor antigens.

The present invention discloses methods of using the receptor tyrosine kinase discoidin domain receptor 1 (DDR1) to facilitate the maturation/differentiation of DCs or macrophages. Activating agents of DDR1 may be

useful in the induction of highly potent, mature DCs or highly differentiated macrophages from DC precursors, such as monocytes. Use of this method may enhance the antigen presenting capabilities of the immune system, leading to a more effective overall immune response.

This research is further described in H. Kamohara *et al.*, FASEB J. (October 15, 2001) 10.1096/fj.01–0359fje; and W. Matsuyama *et al.*, FASEB J. (May 8, 2003) 10.1096/fj.02–0320fje.

Methods for Reducing Tumor Growth and Metastasis by Inhibiting MCP–1 Activity

William J. Murphy *et al.* (NCI).

PCT Patent Application No. PCT/US01/16058, filed May 18, 2001 [HHS Ref. No. E–131–2000/0–PCT–02]; Australian Patent Application No. 2001261743, filed May 18, 2001 [HHS Ref. No. E–131–2000/0–AU–03]; Canadian Patent Application No. 2409298, filed May 18, 2001 [HHS Ref. No. E–131–2000/0–CA–04]; European Patent Application No. 01935670.8–24, filed May 18, 2001 [HHS Ref. No. E–131–2000/0–EP–05]; and U.S. Patent Application No. 10/276,644, filed March 10, 2003 [HHS Ref. No. E–131–2000/0–US–06].

Licensing Contact: Jesse S. Kindra; 301/435–5559; *kindraj@mail.nih.gov*.

Monocyte Chemotactic Protein 1 (MCP–1) is a chemokine that is abundantly produced in a variety of inflammatory diseases. Consistent with its role in inflammation, MCP–1 is known to be chemotactic for monocytes, T lymphocytes, basophiles and NK cells.

Based on its chemotactic effect on monocytes, MCP–1 has been observed to have an anti-tumor effect in certain mouse/tumor experimental designs. In those mouse systems, MCP–1 production by tumor cells was positively correlated with the number of intratumoral macrophages and inversely correlated with tumor growth. These studies have led to the hypothesis that MCP–1 possesses anti-tumorigenic activity.

The present invention is based on the surprising discovery that inhibition of MCP–1 activity inhibits tumor metastasis and prolongs survival. Accordingly, this invention generally relates to methods of inhibiting tumor growth and/or metastasis in a subject, and methods of treating cancer and/or increasing survival of a subject with a tumor, by inhibiting MCP–1 activity in the subject.

In addition to licensing, the technology is available for further development through collaborative research opportunities with the inventors.

Novel DNA Liposome Complexes for Increased Systemic Delivery and Gene Expression

Nancy Smyth-Templeton and George N. Pavlakis (NCI).

U.S. Patent No. 6,413,544 issued 02 Jul 2002 (HHS Reference No. E–143–1996/0–US–03); U.S. Patent No. 6,770,291 issued 03 Aug 2004 (HHS Reference No. E–143–1996/0–US–04); U.S. Patent Application No. 10/825,803 filed 15 Apr 2004 (HHS Reference No. E–143–1996/0–US–16).

Licensing Contact: John Stansberry; 301/435–5236; *stansbej@mail.nih.gov*.

Improved liposomes have been created that could increase the efficacy of treatments for cancer, cardiovascular diseases, and HIV–1 related diseases in small and large animal models. These liposomes efficiently condense nucleic acids, proteins, viruses, drugs, and mixtures of these agents on the interior of bilamellar invaginated structures produced by a novel extrusion procedure. This technology is an improved delivery system for all biologically active reagents. By using extruded DOTAP:Cholesterol liposomes to form complexes with DNA encoding specific proteins, expression has been improved dramatically. These nucleic acid:liposome complexes have extended half-life in the circulation, are stable in serum, have broad biodistribution, efficiently encapsulate various sizes of nucleic acids and other molecules including viruses and drugs, are targetable to specific organs and cell types, penetrate through tight barriers in several organs, are fusogenic with cell membranes and avoid endosomes, are optimized for nucleic acid:lipid ratio and colloidal suspension in vivo, can be size fractionated to produce a totally homogenous population of complexes prior to injection; are non-toxic, non-immunogenic and can be repeatedly administered, and liquid suspensions and freeze-dried formulations are stable. These complexes have been injected into mice, rats, rabbits, pigs, nonhuman primates, and humans. Currently, these complexes are injected intravenously into patients in clinical trials to treat lung cancer and will be used in upcoming trials to treat breast, pancreatic, head and neck cancers; and Hepatitis B and C.

In addition to licensing, the technology is available for further development through collaborative research opportunities with the inventors.

Methods of Delivering Agents to Target Cells

Andrew J. George *et al.* (NCI).

U.S. Patent No. 5,861,156 issued 19 Jan 1999 (HHS Reference No. E–130–1993/0–US–01).

Licensing Contact: George G. Pipia; 301/435–5560; *pipiag@mail.nih.gov*.

The present invention relates to methods of delivering agents to target cells. The target cells are modified by one or more monospecific binding proteins reactive with one or more consistent naturally occurring target cell surface markers. The monospecific binding protein reactive with the cell surface marker is tagged, fused to, or labeled with a chemical moiety which is recognized by, and binds to a site on a multivalent antibody, which also binds an agent to be delivered. The agent is bound to the multivalent antibody, which in turn, is also bound to a tagged monospecific binding protein which is bound to a cell surface marker on a target cell. Thus, the agent is delivered, or directed, to the target cells.

Chemical moiety, as used herein, includes a genetically fused or otherwise coupled peptide, one or more peptides within the sequence of a mono- or bispecific binding protein, a posttranslationally or chemically modified peptide, a chemical substituent such as biotin, incorporated into the protein, or any non-natural amino acid incorporated into the binding protein. Chemical moiety also includes any protein or parts thereof, or peptide comprising an amino acid sequence that is reactive with a recognition site, including a linker connecting variable regions of a single-chain Fv (sFv) or sFv fusion protein, or an epitope of the monospecific binding protein.

The present invention further relates to a method of immunotherapy in a host whereby target cells are destroyed with enhanced selectivity using target cell-directed cytotoxic agents. This method of immunotherapy involves two concepts: the specific modification of the target cell with chemical moiety-labeled monospecific binding proteins and the targeting of cytotoxic agents to the modified target cells.

Dated: August 5, 2005.

Steven M. Ferguson,

Director, Division of Technology Development and Transfer, Office of Technology Transfer, National Institutes of Health.

[FR Doc. 05–16136 Filed 8–12–05; 8:45 am]

BILLING CODE 4140–01–P

DEPARTMENT OF HEALTH AND HUMAN SERVICES

National Institutes of Health

Government-Owned Inventions; Availability for Licensing

AGENCY: National Institutes of Health, Public Health Service, DHHS.

ACTION: Notice.

SUMMARY: The inventions listed below are owned by an agency of the U.S. Government and are available for licensing in the U.S. in accordance with 35 U.S.C. 207 to achieve expeditious commercialization of results of federally-funded research and development. Foreign patent applications are filed on selected inventions to extend market coverage for companies and may also be available for licensing.

ADDRESSES: Licensing information and copies of the U.S. patent applications listed below may be obtained by writing to the indicated licensing contact at the Office of Technology Transfer, National Institutes of Health, 6011 Executive Boulevard, Suite 325, Rockville, Maryland 20852–3804; telephone: 301/496–7057; fax: 301/402–0220. A signed Confidential Disclosure Agreement will be required to receive copies of the patent applications.

Spatially Selective Fixed-Optics Multicolor Fluorescence Detection System for Microfluidic Device

Nicole Y. Morgan, Paul D. Smith, Edward Wellner (ORS).

U.S. Provisional Application No. 60/693,780 filed 27 Jun 2005 (HHS Reference No. E–223–2005/0–US–01).

Licensing Contact: Michael Shmilovich; 301/435–5019; *shmilovm@mail.nih.gov.*

Available for licensing and commercial development is a new scheme for sensitive spatially resolved and spectrally resolved laser-induced fluorescence detection from multiple microfluidic channels. The prototype instrument has been developed and is versatile in that it contains only fixed optical parts and has simultaneous five-color detection from eight microchannels in a plastic microchip for DNA analysis. The detection scheme could be applied to fluorescence detection for any microchip-based analysis in a transparent substrate. The economies of parallel detection and the importance of spatial selectivity would make this method most useful for polymeric substrates with multiple microchannels. Free space laser excitation incident off-axis (about 60 degrees to normal on the chip) is used to minimize the coupling of laser light into the detection optical fiber. The emitted fluorescence is detected with an optical fiber-ball lens combination, one for each microchannel. The spatial selectivity is achieved by using a high refractive index 2 mm ball lens and a small-diameter (200 um) .22 NA optical fiber positioned to obtain focused light from the channel. There are no moving parts so this configuration is both more robust and more versatile than a scanning system. Furthermore, the detection optics can be freely positioned near the channel, placing minimal constraints on channel layout and design. After the emitted fluorescence is coupled into the fiber, the light is passed through a long pass filter (here, 510AELP, Omega Optics), and then spectrally dispersed using a compact imaging spectrograph (FICS, Oriel). The resulting spectra are imaged using a cooled monochrome CCD (Qimaging Retiga EXl) at 10 frames per second. This setup allows simultaneous detection of multiple dyes. The laser excitation is split into multiple spots with two cylindrical lenses and an array of spherical plano-convex lenses. The spacing of the plano-convex lenses is chosen such that the laser spots coincide with the microchannels in the chip. At each excitation spot, a ball lens and optical fiber is positioned underneath the microchannel. The other ends of the optical fiber are formed into a 1–D array and directed onto the slit of an imaging spectrograph.

In addition to licensing, the technology may be available for further development through collaborative research opportunities with the inventors.

Cell-Nanofiber Composite Based Engineered Cartilage

Wan-Ju Li and Rocky S. Tuan (NIAMS).

U.S. Provisional Application No. 60/690,998 filed 15 Jun 2005 (HHS Reference No. E–116–2005/0–US–01).

Licensing Contact: Michael Shmilovich; 301/435–5019; *shmilovm@mail.nih.gov.*

Available for licensing and commercial development is a tissue-engineered cartilage derived from a cellular composite made from a biodegradable, biocompatible polymeric nanofibrous matrix having dispersed chondrocytes or adult mesenchymal stem cells. More particularly, tissue-engineered cartilage can be prepared where the cartilage has a biodegradable and biocompatible nanofibrous polymer matrix prepared by electrospinning and a plurality of chondocytes or mesenchymal stem cells dispersed in the pores of the matrix. The tissue-engineered cartilage possesses compressive strength properties similar to natural cartilage.

The electrospinning process is a simple, economical means to produce biomaterial matrices or scaffolds of ultra-fine fibers derived from a variety of biodegradable polymers (Li WJ, *et al.* J Biomed Mater Res 2002; 60:613–21). Nanofibrous scaffolds (NFSs) formed by electrospinning, by virtue of structural similarity to natural extracellular matrix (ECM), may represent promising structures for tissue engineering applications. Electrospun three-dimensional NFSs are characterized by high porosity with a wide distribution of pore diameter, high-surface area to volume ratio and morphological similarities to natural collagen fibrils (Li WJ, *et al.* J Biomed Mater Res 2002; 60:613–21). These physical characteristics promote favorable biological responses of seeded cells in vitro and in vivo, including enhanced cell attachment, proliferation, maintenance of the chondrocytic phenotype (Li WJ, *et al.* J Biomed Mater Res 2003; 67A: 1105–14), and support of chondrogenic differentiation (Li WJ, *et al.* Biomaterials 2005; 26:599–609) as well as other connective tissue linage differentiation (Li WJ, *et al.* Biomaterials 2005; 26:5158–5166). The invention based on cell-nanofiber composite represents a candidate engineered tissue for cell-based approaches to cartilage repair.

In addition to licensing, the technology is available for further development through collaborative research opportunities with the inventors.

Method and Device for Catheter-Based Repair of Cardiac Valves

Robert J. Lederman (NHLBI).

U.S. Provisional Application No. 60/426,984 filed 15 Nov 2002 (HHS Reference No. E–010–2003/0–US–01); International Patent Application PCT/US03/36617 filed 14 Nov 2003 (HHS Reference No. E–010–2003/0–PCT–02); U.S. Patent Application No. 11/127,112 filed 12 May 2005 (HHS Reference No. E–010–2003/0–US–03).

Licensing Contact: Michael Shmilovich; 301/435–5019; *shmilovm@mail.nih.gov.*

The invention provides a system and method for catheter-based repair of cardiac valves. The technique may permit non-surgical repair of regurgitant valves using percutaneous catheters in awake patients. The intervention is intended to discontinue/lessen regurgitation of the mitral valve and should provide a viable alternative to

the conventional treatment with vasodilator medications and open heart surgery. The technology involves re-apposing of mitral valve leaflets by percutaneous annuloplasty delivering circumferential tensioning devices. Under appropriate imaging guidance (such as fluoroscopic MRI) a circumferential device trajectory is navigated through anatomic (coronary sinus) and non-anatomic spaces to deliver a circumferential tensioning device. Provided are also designs of various catheters, systems that would be necessary to perform the repair of cardiac valves. Imaging methods, like fluoroscopic (real time MRI), could be used to assist the operator for placement and orientation purposes.

In addition to licensing, the technology is available for further development through collaborative research opportunities with the inventors.

Variable Curve Catheter

Robert J. Lederman, Parag Karmarkar (NHLBI).

U.S. Provisional Patent Application 60/426,542 filed 15 Nov 2002 (HHS Reference No. E–035–2003/0–US–01); International Patent Application PCT/US03/36210 filed 14 Nov 2003 (HHS Reference No. E–035–2003/0–PCT–02).

Licensing Contact: Michael Shmilovich; 301/435–5019; *shmilovm@mail.nih.gov.*

The invention provides a deflectable tip guiding device, such as a catheter, that enables the operator to vary the radius of curvature of the tip of the catheter. This is a novel variation on the classic ''fixed fulcrum,'' tip deflectors used in minimally invasive procedures in open surgical treatments. The described device permits a more comprehensive ability to navigate complex geometric pathways in patient's body and enables better access to target structures (*e.g.*, to all endomyocardial walls from a transaortic approach). The guiding device can be made compatible with imaging methods like MRI. The described technology can be used as a platform for a variety of interventional devices for delivery of drugs, cells, energy, or sutures through complex trajectories of the body.

In addition to licensing, the technology is available for further development through collaborative research opportunities with the inventors.

Dated: August 5, 2005.

Steven M. Ferguson,

Director, Division of Technology Development and Transfer, Office of Technology Transfer, National Institutes of Health.

[FR Doc. 05–16137 Filed 8–12–05; 8:45 am]

BILLING CODE 4140–01–P

DEPARTMENT OF HEALTH AND HUMAN SERVICES

National Institutes of Health

Government-Owned Inventions; Availability for Licensing

AGENCY: National Institutes of Health, Public Health Service, DHHS.

ACTION: Notice.

SUMMARY: The inventions listed below are owned by an agency of the U.S. Government and are available for licensing in the U.S. in accordance with 35 U.S.C. 207 to achieve expeditious commercialization of results of federally-funded research and development. Foreign patent applications are filed on selected inventions to extend market coverage for companies and may also be available for licensing.

ADDRESSES: Licensing information and copies of the U.S. patent applications listed below may be obtained by writing to the indicated licensing contact at the Office of Technology Transfer, National Institutes of Health, 6011 Executive Boulevard, Suite 325, Rockville, Maryland 20852–3804; telephone: 301–496–7057; fax: 301–402–0220. A signed Confidential Disclosure Agreement will be required to receive copies of the patent applications.

Benztropinamine Analogs as Dopamine Transport Inhibitors

Amy H. Newman *et al.* (NIDA).

U.S. Provisional Application No. 60/689,746 filed 10 Jun 2005 (HHS Reference No. E–089–2005/0–US–01).

Licensing Contact: Marlene Shinn-Astor; 301–435–4426; *shinnm@mail.nih.gov.*

Dopamine is a neurotransmitter that is directly involved in locomotor activity, motivation and reward, and cognition. The dopamine transporter is expressed on the plasma membrane of dopamine neurons and is responsible for clearing dopamine released into the extracellular space, thereby regulating neurotransmission. The dopamine transporter plays a significant role in neuropsychiatric diseases, such as Parkinson's disease, drug abuse (especially cocaine addiction), Attention Deficit Disorder/Attention Deficit Hyperactivity Disorder (ADD/ADHD), narcolepsy and a number of other CNS disorders. Therefore, the dopamine transporter is a target for research and potential therapeutics for the treatment of these indications.

Benztropine and its analogs are an important class of dopamine transport inhibitors that are indicated for the treatment of cocaine abuse and ADHD. They bind with high affinity to the dopamine transporter and block dopamine uptake, but generally do not produce behavioral effects comparable to those produced by cocaine. In animal models of drug abuse, many benztropine analogs have been shown to (1) reduce cocaine-induced locomotor stimulation, (2) have long-lasting effects, and (3) lack a significant abuse liability. This suggests they may be useful medications for the treatment of human diseases where dopamine-related behavior is compromised, especially in situations in which an (partial) agonist treatment is indicated.

However, some of the reported analogs have limited or poor solubility in aqueous systems or poor stability characteristics. To remedy this, the 3-position benzhydrylether moiety of the benztropine analogs was replaced with the isosteric benzhydrylamine system in order to reduce hydrolysis of the less stable ether function, observed in the benztropine series, and further reduce lipophilicity to ultimately increase water solubility and bioavailability for improved therapeutic formulation and utility.

In addition to licensing, the technology is available for further development through collaborative research opportunities with the inventors.

Inhibition of SMAD-Signaling Leads To Enhanced Insulin Production and Better Glucose Control: A Potential Therapy for Diabetes and Associated Complications Due to Hyperglycemia

Sushil G. Rane *et al.* (NCI).

U.S. Provisional Application No. 60/665,204 filed 25 Mar 2005 (HHS Reference No. E–235–2004/0–US–01).

Licensing Contact: Marlene Shinn-Astor; 301–435–4426, *shinnm@mail.nih.gov.*

TGFβ and related proteins, activins and bone morphogenetic proteins (BMPs), are critical during pancreas development. Alterations in the TGFβ pathway are observed in diseases of the pancreas, including diabetes and cancer, although the precise ramifications of altered TGFβ functions are unclear. The *DPC4* (deleted in pancreas cancer 4) locus that encodes the TGFβ-signaling intermediate, SMAD 4, is mutated in 55–70% of pancreatic cancers and

alterations in expression of the TGFβ receptors I and II (TβRI and TβRII) are also observed during pancreatic cancer progression. These observations are consistent with an integral role of the TGFβ pathway components in pancreas biology and disease progression. However, the molecular details and the target cell population of TGFβ signals during pancreas development and disease are not known.

SMAD proteins are downstream mediators of signals from TGFβ 1,2,3 and activin, and SMAD proteins have been implicated as important factors in cellular proliferation, differentiation and migration. This invention identifies another important regulatory role for the TGFβ-signaling pathway in insulin production. The inventors have shown that low levels of TGFβ can suppress insulin production through the actions of the SMAD signaling proteins. Small molecule regulators of SMAD-dependent signaling may lead to better insulin production and allow better glucose regulation. Thus, controlled administration of TGFβ signaling regulators may be useful in the treatment of diabetes, hyperglycemia and related complications.

In addition to licensing, the technology is available for further development through collaborative research opportunities with the inventors.

Anti-Marinobufagenin Antibodies and Methods for Their Use

Alexei Bagrov *et al.* (NIA).
U.S. Provisional Application No. 60/694,733 filed 27 Jun 2005 (HHS Reference No. E–092–2004/0–US–01).
Licensing Contact: Fatima Sayyid; 301–435–4521; *sayyidf@mail.nih.gov.*

Pre-eclampsia is associated with increased blood levels of marinobufagenin (MBG), a steroid that increases blood pressure by inhibiting a membrane enzyme, Na/K ATPase, in the vascular wall. Pre-eclampsia complicates up to 10% of pregnancies in the U.S. and is a significant factor in causing maternal and fetal mortality and morbidity worldwide.

The present invention relates to compositions and methods for detecting the presence of MBG in a biological sample. It also relates to methods for the use of monoclonal antibodies or antigen binding fragments as prophylactic, therapeutic, and diagnostic agents for the detection, inhibition and treatment of hypertension.

In addition to licensing, the technology is available for further development through collaborative research opportunities with the inventors.

Dated: August 5, 2005.

Steven M. Ferguson,

Director, Division of Technology Development and Transfer, Office of Technology Transfer, National Institutes of Health.

[FR Doc. 05–16138 Filed 8–12–05; 8:45 am]

BILLING CODE 4140–01–P

DEPARTMENT OF HEALTH AND HUMAN SERVICES

Substance Abuse and Mental Health Services Administration

Center for Substance Abuse Treatment; Notice of Meeting

Pursuant to Public Law 92–463, notice is hereby given of a Teleconference Meeting of the Center for Substance Abuse Treatment (CSAT) National Advisory Council to be held August 15, 2005.

The meeting will include the review, discussion and evaluation of grant applications reviewed by Initial Review Groups. Therefore, the meeting will be closed to the public as determined by the SAMHSA Administrator, in accordance with Title 5 U.S.C. 552b(c)(6) and 5 U.S.C. App. 2, 10(d).

Substantive program information and a roster of Council members may be obtained by accessing the SAMHSA Advisory Council Web site (*http://www.samhsa.gov*) as soon as possible after the meeting, or by communicating with the contact whose name and telephone number are listed below.

Committee Name: Substance Abuse and Mental Health Services Administration, Center for Substance Abuse Treatment National Advisory Council.

Meeting Date: August 15, 2005.

Place: 1 Choke Cherry Road, 5th Floor Conference Room, Rockville, MD 20857.

Type: Closed: August 15, 2005–11 a.m.–12 p.m.

Contact: Cynthia Graham, M.S., NAC Executive Secretary, SAMHSA/CSAT National Advisory Council, 1 Choke Cherry Road, Room 5–1036, Rockville, MD 20857. Telephone: (240) 276–1692. FAX: (240) 276–1690. E-mail: *cynthia.graham@samhsa.hhs.gov.*

This notice is being published less than 15 days prior to the meeting due to the urgent need to meet timing limitations imposed by the Department and the review and funding cycle.

Dated: August 10, 2005.

Toian Vaughn,

Committee Management Officer, Substance Abuse and Mental Health, Services Administration.

[FR Doc. 05–16164 Filed 8–12–05; 8:45 am]

BILLING CODE 4162–20–P

DEPARTMENT OF THE INTERIOR

Fish and Wildlife Service

Information Collection Renewal To Be Sent to the Office of Management and Budget (OMB) for Approval Under the Paperwork Reduction Act; OMB Control Number 1018–0119; Policy for Evaluating Conservation Efforts When Making Listing Decisions

AGENCY: Fish and Wildlife Service, Interior.

ACTION: Notice; request for comments.

SUMMARY: We (Fish and Wildlife Service, Service) plan to send OMB a request to renew approval for information collections associated with our Policy for Evaluation of Conservation Efforts When Making Listing Decisions (PECE). We use the information that we collect as part of the basis for identifying conservation efforts that can contribute to a decision to not list a species under the Endangered Species Act (ESA) or to list a species as threatened rather than endangered.

DATES: You must submit comments on or before October 14, 2005.

ADDRESSES: Send your comments on this information collection to Hope Grey, Information Collection Clearance Officer, Fish and Wildlife Service, MS 222–ARLSQ, 4401 North Fairfax Drive Arlington, Virginia 22203 (mail); *hope_grey@fws.gov* (e-mail); or (703) 358–2269 (fax).

FOR FURTHER INFORMATION CONTACT: To request a copy of the information collection requirements or explanatory material, contact Hope Grey, Information Collection Clearance Officer, at the above addresses or by telephone at (703) 358–2482. For information related to the Policy for Evaluation of Conservation Efforts When Making Listing Decisions, please visit our Web site at *http://www.fws.gov/endangered/listing/pece-final.pdf.*

SUPPLEMENTARY INFORMATION: The OMB regulations at 5 CFR 1320, which implement provisions of the Paperwork Reduction Act of 1995 (44 U.S.C. 3501 *et seq.*), require that interested members of the public and affected agencies have an opportunity to comment on information collection and recordkeeping activities (see 5 CFR 1320.8(d)). We will ask OMB to renew approval of the collection of information for certain types of conservation agreements, conservation plans, and similar documents in relation to PECE (68 FR 15100, March 28, 2003). The current OMB control number for this

collection of information is 1018–0119, which expires on December 31, 2005. We will request a 3-year term of approval for this information collection activity. Federal agencies may not conduct or sponsor and a person is not required to respond to a collection of information unless it displays a currently valid OMB control number.

The ESA specifies the process by which we can list species as threatened or endangered. When we consider whether or not to list a species, the ESA requires us to take into account ''those efforts, if any, being made by any State * * * or any political subdivision of a State * * * to protect such species * * *.'' States or other entities often formalize conservation efforts in conservation agreements, conservation plans, management plans, or similar documents. The actions proposed in conservation plans could prevent some species under the ESA. The development of such agreements or plans is voluntary, and there is no requirement that the agreement or plans, or the individual conservation efforts they include, be designed to meet the criteria in PECE. However, PECE encourages the development of conservation agreements/plans and provides certainty about the standard that individual conservation efforts contained in an agreement/plan must meet so that we can consider that such efforts contribute to forming a basis for a listing determination.

PECE applies to formal conservation efforts developed regardless of intent to influence a listing decision or involvement of the Service. Only those agreements/plans developed with the intent of influencing a listing decision and with involvement of the Service constitute an information collection that requires OMB approval under the Paperwork Reduction Act.

PECE specifies that to consider that a conservation effort contributes to forming a basis for not listing a species or listing a species as threatened rather than endangered, the Service must find the effort is sufficiently certain to be implemented and effective so as to have contributed to the elimination or adequate reduction of one or more threats to the species. To gauge whether or not this standard has been met, PECE includes criteria for evaluating the certainty of implementation and the certainty of effectiveness of individual conservation efforts. One criterion for evaluating the certainty of effectiveness of a conservation effort is that the agreement/plan contains provisions for monitoring and reporting progress on implementation and effectiveness of the effort. The nature of the monitoring and reporting will vary according to the species addressed, land ownership, specific conservation efforts, expertise of participants, and other factors. The information collected through monitoring is invaluable to the Service, the States, and other entities implementing agreements and plans, and to others concerned about the welfare of the species covered by the agreements/plans.

Estimating the amount of work associated with developing a conservation agreement or plan is difficult because:

(1) The development and associated monitoring of conservation efforts are completely voluntary, and we cannot predict who will decide to develop these efforts,

(2) We cannot predict which species will become the subjects of conservation efforts, and, therefore, cannot predict the nature and extent of conservation efforts and monitoring that might be included in conservation agreements/plans designed with the intent of influencing a decision regarding listing a species; and

(3) Many agreements/plans, such as agency land management plans, are developed to satisfy requirements of other laws or for other purposes, and we cannot predict whether or the extent to which some of these plans may be expanded to attempt to make listing unnecessary. Consequently, we must base our estimate of the amount of work associated with developing conservation agreements or plans and monitoring and reporting of conservation efforts on information from conservation agreements developed in the past.

We estimate the public reporting burden for the information collection covered by this renewal to average 2,500 hours for developing one agreement with the intent to preclude a listing, 320 hours for annual monitoring under one agreement, and 80 hours for one annual report. We expect that six agreements with the intent of making listing unnecessary will be developed in 1 year and that four of these will be successful in making listing unnecessary, and therefore, the entities that develop these four agreements will carry through with their monitoring and reporting commitments.

Title: Policy for Evaluating Conservation Efforts When Making Listing Decisions.

Approval Number: 1018–0119.

Form Numbers: None.

Frequency of Collection: Occasional.

Description of Respondents: Federal agencies, states, tribes, local governments, individuals, not-for-profit institutions.

Total Annual Burden Hours: 16,600 hours.

Total Annual Responses: 6.

We invite your comments on: (1) Whether or not the collection of information is necessary for the proper performance of the Policy for Evaluation of Conservation Efforts When Making Listing Decisions, including the opinion of the respondent regarding the practical utility of the information; (2) the accuracy of our estimate of the annual hour burden of information requested; (3) ways to enhance the quality, utility, and clarity of the information to be collected; and (4) ways to minimize the burden of the collection of information on respondents. The information collections in this program will be part of a system of records covered by the Privacy Act (5 U.S.C. 552(a)).

Dated: August 3, 2005.

Hope Grey,

Information Collection Clearance Officer, Fish and Wildlife Service.

[FR Doc. 05–16086 Filed 8–12–05; 8:45 am]

BILLING CODE 4310–55–M

DEPARTMENT OF THE INTERIOR

Fish & Wildlife Service

Notice of Intent To Conduct Restoration Planning: M/V Citrus Natural Resource Damage Assessment

AGENCY: Fish & Wildlife Service, Department of the Interior.

ACTION: Notice of intent to conduct restoration planning.

SUMMARY: The United States Department of the Interior, trustee for the incident involving the discharge of oil from the M/V Citrus, has chosen to enter into the restoration planning phase of a Natural Resource Damage Assessment. The purpose of this phase is to prepare a plan for the restoration, rehabilitation, replacement, or the acquisition of the natural resources injured, destroyed or lost, or the uses which were lost, as a result of this discharge.

FOR FURTHER INFORMATION CONTACT: Greg Siekaniec, Refuge Manager or Laurie Daniel, M/V Citrus Case Manager, Alaska Maritime National Wildlife Refuge (AMNWR), 95 Sterling Highway, Suite 1, Homer, AK 99603, or by phone at (907) 235–6546.

SUPPLEMENTARY INFORMATION: In mid-February of 1996, a large number of various species of oiled migratory waterfowl and seabirds were discovered on the Bering Sea islands of St. Paul and St. George, in the Pribilof Islands, Alaska. Laboratory analysis of oil samples taken from vessels in the area

and from the carcasses of oiled birds resulted in the identification by the United States Coast Guard of the cargo freighter M/V Citrus as the source of the oil.

In the days immediately preceding this discovery, the hull of the M/V Citrus had been ruptured during operations offshore of the northwest end of St. Paul Island when cargo from another vessel was being transferred to the M/V Citrus. As a result of this rupture and the crew's efforts to stabilize the vessel, an undetermined amount of heavy fuel oil was discharged from the M/V Citrus into waters of the United States within the Bering Sea.

The discharge of oil from the M/V Citrus described above is referred to in this Notice of Intent to Conduct Restoration Planning (''Notice''), issued pursuant to 15 CFR 990.44, as the ''Incident.''

Pursuant to section 1006(b) of the Oil Pollution Act of 1990 (''OPA''), 33 U.S.C. 2706(b), the Secretary of the U.S. Department of the Interior, represented by the Regional Director of the Fish and Wildlife Service, Alaska Region, is a designated trustee of natural resources for this Incident (''Trustee''). The Trustee is responsible for assessing the damages to natural resources under its trusteeship that have resulted from the Incident, developing a plan for the restoration of these resources, and pursuing funding from responsible parties for the implementation of this plan or the implementation of the plan by the responsible parties themselves. The Trustee is proceeding in accordance with the regulations for Natural Resource Damage Assessments at 15 CFR part 990.

One of the goals of OPA is to make the environment and the public whole for injuries to natural resources and services resulting from an incident involving a discharge or substantial threat of a discharge of oil from a vessel into or upon navigable waters or adjoining shorelines. This goal is achieved through the return of the injured natural resources and services to baseline and the provision of compensation for interim losses of such natural resources and the services they provide, to other natural resources and/or the public, from the date of the incident until recovery.

The parties responsible for the Incident (''Responsible Parties'') include Excel Navigation, S.A., the owner and operator of the M/V Citrus at the time of the Incident. The guarantor of financial responsibility for the liability of Excel Navigation, S.A,. is the Japan Shipowners' Mutual Protection and Indemnity Association.

The Trustee has performed pre-assessment activities in connection with the Incident, including data collection and preliminary analysis. These activities include conducting a drift experiment to assess the influence of wind on the recovery of oiled seabirds; conducting a study to estimate persistence rates and detection probabilities of oiled king eider carcasses; conducting Seawatch surveys and counts to determine species at risk from the Incident; performing a genetic characterization of breeding and wintering king eiders; and collecting and cataloguing marine bird carcasses found on beaches following the Incident.

On September 1, 2004, the Trustee invited Excel Navigation, S.A., to participate in the Natural Resource Damage Assessment and Restoration Planning process.

Trustee Determinations

1. Determination of Jurisdiction

The Trustee has made the following findings pursuant to 15 CFR 990.41:

a. The Trustee has jurisdiction to pursue restoration pursuant to the Oil Pollution Act, 33 U.S.C. 2702 and 2706(c). The discharge of oil beginning on or about February 16, 1996, from the M/V Citrus into the Bering Sea, approximately 6 km north of St. Paul Island, was an ''incident'' as defined at 15 CFR 990.30.

(1) The M/V Citrus, a ''vessel'' as defined at 33 U.S.C. 2701(37), discharged the entire quantity of oil involved in this Incident.

(2) The M/V Citrus discharged oil into or upon navigable waters of the United States, including navigable waters adjacent to St. Paul Island, Alaska.

b. The Trustee has determined that:

(1) This Incident was not permitted under Federal, State or local law;

(2) The M/V Citrus is not a public vessel, as defined at 15 CFR 990.30;

(3) The discharge of oil did not occur from an onshore facility subject to the Trans-Alaska Pipeline Authority; and

(4) Natural resources under the trusteeship of the Trustee were injured as a result of the Incident. 40 CFR 300.600(b)(2).

c. Based upon information gathered during the response phase of the Incident and the pre-assessment phase of the Natural Resource Damage Assessment, the Trustee has determined that, due to the amount and type of oil discharged, the location of the discharge, and the living and non-living natural resources and uses in the area at the time of the discharge, natural resources under its trusteeship have been injured, destroyed, or lost, and use of the natural resources has been lost as a result of the Incident.

2. Determination To Conduct Restoration Planning

The Trustee has determined, pursuant to 15 CFR 990.42(a), that:

a. Data collected and analyzed pursuant to 15 CFR 990.43 demonstrate that injuries to natural resources have resulted from the Incident, including but not limited to injury to a wide variety and number of waterfowl and seabirds. Among the species injured are pelagic cormorants, red-faced cormorants, long-tailed ducks (formerly called oldsquaw), harlequin ducks, king eiders, spectacled eiders, glaucous-winged gulls, common murres, thick-billed murres, crested auklets, parakeet auklets, and pigeon guillemots. Spectacled eiders are federally listed as ''threatened'' under the Endangered Species Act, 16 U.S.C. 1531–1544. A total of 1367 injured birds were recovered onshore as a result of the incident. Specifically, 1202 dead birds were recovered on beaches, and 165 live but oiled birds were captured and underwent rehabilitation.

In light of the prevailing weather and sea conditions at the time of the Incident, their presence in the area, and the nature of the birds at risk from the Incident, the Trustee believes that a large number of marine birds likely perished at sea. The Trustee plans to further analyze the extent of injury to better define the total number of birds injured and services lost from the Incident.

b. Response actions have not adequately addressed the injuries and lost services resulting from the Incident. Response efforts included removing dead bird carcasses and capturing, cleaning, and rehabilitating live oiled birds. Despite these efforts, only a small percentage of the birds affected by the oil were treated and many birds perished as a result of the Incident.

c. Potential assessment procedures to be used to evaluate injuries to, and to design and implement the appropriate type and scale of restoration for these natural resources and services consist of, but are not necessarily limited to:

(1) Examining pre-existing baseline data on marine birds which normally winter in the area of the Incident, and data collected from Seawatch surveys at the time of the Incident, to assess damage to resources;

(2) Modeling of pre-existing population and incident-related carcass recovery data to obtain an estimate of total birds injured by the Incident; and

(3) Analyzing habitat information to properly scale restoration needs.

d. Feasible primary and compensatory restoration actions exist to address injuries from the Incident. Restoration activities are expected to focus on marine birds. Restoration could include actions to protect and enhance habitat. Feasible restoration actions relevant to the injuries may include, but are not necessarily limited to:

(1) Establishing a database of demographic and phenotypic information on king eiders for identification and management of sensitive areas around the Pribilof Islands;

(2) Preventing the introduction of rats on the Pribilof Islands to protect the habitat and populations of marine birds injured by the Incident;

(3) Removing introduced terrestrial invasive species that prey on or compete with marine birds, such as fox, rats, and /or ground squirrels on certain islands of the Alaska Maritime National Wildlife Refuge to restore habitat and populations of marine birds injured by the Incident;

(4) Enhance, protect, and/or acquire seabird nesting habitat in the Aleutian and Pribilof Islands; and

(5) Public outreach in the Pribilof Islands on issues that can reduce further marine bird losses.

Data supporting these determinations are contained in the Administrative Record established for this case (see below).

Based upon the foregoing determination, the Trustee has chosen to proceed with restoration planning for this Incident.

Opportunity To Comment

Pursuant to 15 CFR 990.14(d), the Trustee will seek public involvement in restoration planning for this Incident through public review of, and comment on, the Draft Restoration Plan. When the Draft Restoration Plan is prepared, the public will be notified of the opportunity to comment. Questions regarding this Notice may be directed to: Greg Siekaniec, Refuge Manager or Laurie Daniel, M/V Citrus Case Manager, Alaska Maritime National Wildlife Refuge (AMNWR), 95 Sterling Highway, Suite 1, Homer, Alaska 99603, Phone: (907) 235–6546.

Administrative Record

The Trustee has opened an Administrative Record (''Record'') in compliance with 15 CFR 990.45. The Record includes documents relied upon by the Trustee to date in the pre-assessment phase of the natural resource damage assessment in connection with the Incident, and the Record will be supplemented with additional relevant documents as the natural resource damage assessment proceeds. The Record is on file at the Alaska Maritime National Wildlife Refuge in Homer, Alaska. Arrangements can be made to review the Record by contacting Greg Siekaniec, Refuge Manager or Laurie Daniel, M/V Citrus Case Manager, at the above contact information.

Dated: March 16, 2005.

Gary Edwards,

Deputy Regional Director, U.S. Fish and Wildlife Service, Anchorage, Alaska.

[FR Doc. 05–16105 Filed 8–12–05; 8:45 am]

BILLING CODE 4310–55–U

DEPARTMENT OF THE INTERIOR

Fish and Wildlife Service

Notice of Meeting of the Trinity Adaptive Management Working Group

AGENCY: Fish and Wildlife Service, Interior.

ACTION: Notice of meeting.

SUMMARY: Pursuant to section 10(a)(2) of the Federal Advisory Committee Act (5 U.S.C. App. I), this notice announces a meeting of the Trinity Adaptive Management Working Group (TAMWG). The TAMWG affords stakeholders the opportunity to give policy, management, and technical input concerning Trinity River restoration efforts to the Trinity Management Council. Primary objectives of the meeting will include: New member orientation; TAMWG organization and operations; Trinity River Restoration Program budget status; Implementation progress report; Fall fish returns and river conditions; Science program; and Klamath-Trinity coordination. Completion of the agenda is dependent on the amount of time each item takes. The meeting could end early if the agenda has been completed. The meeting is open to the public.

DATES: The Trinity Adaptive Management Working Group will meet from 1 p.m. to 5 p.m. on Monday, September 12, 2005, and from 8 a.m. to 5 p.m. on Tuesday, September 13, 2005.

ADDRESSES: The meeting will be held at the Weaverville Victorian Inn, 1709 Main Street, Weaverville, CA 96093. Telephone: (530) 623–4432.

FOR FURTHER INFORMATION CONTACT: Mike Long of the U.S. Fish and Wildlife Service, Arcata Fish and Wildlife Office, 1655 Heindon Road, Arcata, California 95521, (707) 822–7201. Mike Long is the working group's Designated Federal Official.

SUPPLEMENTARY INFORMATION: For background information and questions regarding the Trinity River Restoration Program, please contact Douglas Schleusner, Executive Director, Trinity River Restoration Program, P.O. Box 1300, 1313 South Main Street, Weaverville, California 96093, (530) 623–1800.

Dated: August 8, 2005.

John Engbring,

Acting Manager, California/Nevada Operations Office, Sacramento, CA.

[FR Doc. 05–16103 Filed 8–12–05; 8:45 am]

BILLING CODE 4310–55–P

DEPARTMENT OF THE INTERIOR

Fish and Wildlife Service

Notice of Availability of the Assessment Plan for the Palmerton Natural Resource Damage Assessment in Carbon, Lehigh, Monroe, and Northampton Counties, PA

AGENCY: U.S. Fish and Wildlife Service, Department of the Interior.

ACTION: Notice of availability.

SUMMARY: The U.S. Fish and Wildlife Service (FWS), acting as lead administrative Trustee, on behalf of the National Park Service (NPS), the National Oceanic and Atmospheric Administration (NOAA), the Pennsylvania Game Commission (PGC), the Pennsylvania Fish and Boat Commission (PFBC), the Pennsylvania Department of Environmental Protection (PDEP), and the Pennsylvania Department of Conservation and Natural Resources (PDCNR), jointly known as the Palmerton Natural Resource Trustee Council, announces the release of the Palmerton Natural Resource Damage Assessment (NRDA) Plan (Plan) for public review. The Plan describes the Trustee Council's proposal to assess potential injury to natural resources as a result of a release of hazardous substances from the Palmerton Zinc Pile Superfund Site (Site), Palmerton, Pennsylvania.

DATES: Written comments must be submitted on or before September 14, 2005.

ADDRESSES: Written comments or materials regarding the Plan should be sent to: Steve Klassen, U.S. Fish and Wildlife Service, 315 South Allen Street, Suite 322, State College, Pennsylvania 16801. Requests for copies of the Plan may be made to the same address. The Plan will also be available at the Palmerton Library, 402 Delaware Avenue, Palmerton, Pennsylvania

18071, and on the Internet at the following sites: *http://www.fws.gov/contaminants/restorationplans/palmerton/palmerton.cfm*, *http://www.dep.state.pa.us/dep/deputate/airwaste/wm/remserv/nrd/nrdhome.html*.

FOR FURTHER INFORMATION CONTACT: Steve Klassen, U.S. Fish and Wildlife Service, Pennsylvania Field Office, 315 South Allen Street, Suite 322, State College, Pennsylvania 16801. Interested parties may also call 814–234–4090 for further information.

SUPPLEMENTARY INFORMATION: The Site is located in the Ridge and Valley Province of Carbon, Lehigh, and Northampton Counties, Pennsylvania. Facilities at the Site include the East and West Plants of the former New Jersey Zinc Company, a primary zinc smelting facility. This facility discharged metals to the surrounding environment via air emissions and through the release of solid wastes, including the creation of a large waste pile (the ''cinder bank''). Hazardous substances released to the environment from these facilities include arsenic, cadmium, chromium, copper, lead, manganese, and zinc (metals). The release of these metals resulted in the contamination and defoliation of thousands of acres of land including Federal (NPS) and State (PGC) lands adjacent to the Appalachian National Scenic Trail. Past and ongoing releases of metals have also adversely affected area waters including Aquashicola Creek, the Lehigh River, and groundwater. Due to hazardous substances released from industrial activities, the Site was included on the National Priorities List in 1983, by the U.S. Environmental Protection Agency (EPA). The EPA is acting as the lead response agency overseeing cleanup of the Site, which is being carried out by the potentially responsible parties, Viacom International, Inc. and Horsehead Corporation.

Under Federal regulations, the Federal government, States, and Indian tribes are authorized as natural resource trustees to recover damages from responsible parties for injuries to natural resources caused by the release of hazardous substances. This process is intended to compensate the public for lost natural resources and to restore services provided by those resources. The natural resource trustees for this matter include: The FWS; the NPS; the NOAA; the PGC; the PFBC; the PDEP; and the PDCNR.

The Trustees have developed a Memorandum of Agreement that provides a framework for continued cooperation and coordination. The Trustees have determined through a Preassessment Screen that an assessment is warranted. A Notice of Intent (NOI) to perform an assessment was issued to Viacom International, Inc., the Potentially Responsible Party, indicating that the Trustees intend to proceed with NRDA procedures for the Site. The NOI invited Viacom to participate in a cooperative injury assessment, and Viacom has since entered into a cooperative funding agreement designed to provide a framework for a cooperative NRDA process.

The purpose of this Plan is to guide the actions of the Trustees through the NRDA process. This Plan outlines the Trustees' proposed plans to document and evaluate potentially injured resources. The Trustees intend to focus on the loss of ecological and human use services resulting from injuries to natural resources. Such lost services include impairment of terrestrial, floodplain, and aquatic flora and fauna; supporting habitats; and public use of natural resources (*e.g.*, hunting, fishing, hiking, bird watching).

The Trustees will assess suspected injuries to natural resources using existing data, as well as those proposed to be collected as part of the assessment. The Trustees will further analyze the identified natural resource injuries to evaluate the lost ecological and human use services provided by those resources. The evaluation will focus on baseline services that would have been provided had the hazardous substances not been released.

Interested members of the public are invited to review and comment on the Plan. Copies of the Plan are available for review at the Service's Pennsylvania Field Office located at 315 South Allen Street, State College, Pennsylvania 16801, the Palmerton Library located at 402 Delaware Avenue, Palmerton, Pennsylvania 18071, and on the Internet at: *http://www.fws.gov/contaminants/restorationplans/palmerton/palmerton.cfm, http://www.dep.state.pa.us/dep/deputate/airwaste/wm/remserv/nrd/nrdhome.html.*

Author: The primary author of this notice, on behalf of the Trustee Council, is Steve Klassen, U.S. Fish and Wildlife Service, Pennsylvania Field Office, 315 South Allen Street, State College, Pennsylvania 16801.

Authority: The authority for this action is the Comprehensive Environmental Response, Compensation and Liability Act of 1980 as amended, commonly known as Superfund (42 U.S.C. 9601 *et seq.*), and the Natural Resource Damage Assessment Regulations found at 43 CFR part 11.

Dated: July 14, 2005.

Geoffrey L. Haskett,

Acting Regional Director, Region 5, U.S. Fish and Wildlife Service, U.S. Department of the Interior, Designated Authorized Official.

[FR Doc. 05–16102 Filed 8–12–05; 8:45 am]

BILLING CODE 4310–55–P

DEPARTMENT OF THE INTERIOR

Bureau of Land Management

[NM–922–1320–05, OKNM 104763, OKNM 107920, OKNM 108097]

Notice of Competitive Coal Lease Sale, Oklahoma

AGENCY: Bureau of Land Management, Interior.

ACTION: Notice of competitive coal lease sale.

SUMMARY: Notice is hereby given that the United States Department of the Interior, Bureau of Land Management (BLM) New Mexico State Office, in conjunction with the Oklahoma Field Office, will offer certain coal resources in three separate tracts described below in LeFlore, Latimer, and Haskell Counties in Oklahoma, for competitive sale by sealed bid, in accordance with the provisions of the Mineral Leasing Act of 1920, as amended (30 U.S.C. 181, *et seq.*).

DATES: The Lease Sale for the three separate tracts will be held at 10 a.m., Wednesday, September 14, 2005. Sealed bids must be submitted on or before 9 a.m., on September 14, 2005.

ADDRESSES: The Lease Sale will be held in the BLM Conference Room, Oklahoma Field Office, 7906 E. 33rd Street, Ste. 101, Tulsa, OK 74145. Sealed bids for each separate tract must be submitted to the Cashier, Oklahoma Field Office, at the address above.

FURTHER INFORMATION CONTACT: Ida T. Viarreal, Land Law Examiner, at (505) 438–7603, or Abdalla M. Elias, Mining Engineer, at (918) 621–4116.

SUPPLEMENTARY INFORMATION: This Coal Lease Sale is being held in response to three coal lease applications filed by Farrell Cooper Mining Company. Each tract will be leased to the qualified bidder(s) submitting the highest cash offer provided that the high bids meet or exceed the fair market value of the tracts as determined by the authorized officer after the Sale. No bid that is less than $100.00 per acre, or fraction thereof, will be considered. This $100.00 per acre is a regulatory minimum, and is not intended to reflect

fair market value of the tracts. Each bid should be clearly identified by tract number or serial number on the outside of the envelope containing the bid(s). The bids should be sent by certified mail, return receipt requested, or should be hand delivered. The Cashier will issue a receipt for each hand delivered sealed bid. Bids received after 9 a.m., on September 14, 2005, will not be considered. If identical high sealed bids are received, the tying bidders will be requested to submit follow-up sealed bids until a high bid is received. All tie-breaking sealed bids must be submitted within 15 minutes following the Sale official's announcement at the Sale that identical sealed bids have been received.

The three coal lease tracts to be offered are:

Tract No. 1—Liberty West—OKNM 104763

The coal resource to be offered will be mined by both surface and underground mining methods in the following described lands located in Haskell County, Oklahoma:

T. 10 N., R. 21 E., I.M.,
Sec. 1, S½NE¼, and S½;
Sec. 12, NE¼NE¼, W½NE¼, and NW¼SE¼.

Containing 560.00 acres, more or less.

Estimated recoverable Federal reserves of bituminous coal from the Stigler seam is 2.057 million tons. The proximate analysis of the coal on a received basis averages 14,025 BTU/lb., with 0.58% moisture, 3.56% sulfur, 9.21% ash, 64.2% fixed carbon, and 26.7% volatile matter. This tract has four qualified surface owners. Two consent documents from qualified surface owners have been filed and verified by the BLM and meet the criteria as required by the regulations.

Tract No. 2—McCurtain No. 1 Tract—OKNM 108097

The coal resource to be offered will be mined by underground mining methods in the following described lands located in Haskell County, Oklahoma:

T. 8 N., R. 22 E., I. M.,
Sec. 8, NE¼SE¼, S½SE¼, and beginning at the south quarter corner of Section 8, T. 8 N., R. 22 E., thence N. 0° 3′ W., 1,320 feet along the east line of the SW¼ of said section, thence S. 89° 43.75′ W., 1,320.41 feet along the north line of the SE¼SW¼ of said section, thence S. 45° 10.17′ E., 1,863.45 feet to the point of beginning, all within the SE¼SW¼ of Section 8, T. 8 N., R. 22 E.;
Sec. 9, S½NE¼, SE¼NW¼; and S½;
Sec. 10, All;
Sec. 11, W½W½;
Sec. 14, NW¼;
Sec. 15, N½, and N½SW¼;
Sec. 16, N½, and beginning at the west quarter corner of Section 16, T. 8 N., R. 22 E., thence N. 89° 42′ E., 2,634.39 feet along the north line of the SW¼ of said section, thence S. 44° 46′ W., 1,868.91 feet to the NE corner of the SW¼SW¼ of said section, thence N. 45° 6.7′ W., 1,860.64 feet to the point of beginning, all within the SW¼ of Section 16, T. 8 N., R. 22 E., (40.00 acres);
Sec. 17, Beginning at the NE corner of Section 17, T. 8 N., R. 22 E., thence S. 89° 40′ W., 2,640 feet along the north line of said section, thence S. 45° 11.5′ E., 3,724.28 feet to the east quarter corner of said section, thence N. 0° 3′ W., 2,640 feet along the east line of said section to the point of beginning, all within the NE¼ of Section 17, T. 8 N., R. 22 E., (80.00 acres).

Containing 2,380.00 acres, more or less.

Estimated recoverable Federal reserves of bituminous coal from the Hartshorne seam is 10.058 million tons recoverable by underground mining methods. The proximate analysis of the coal on a received basis averages 13,320 BTU/lb., with 3.1% moisture, 0.9% sulfur, 9.8% ash, 67.4% fixed carbon, and 20.3% volatile matter.

Tract No. 3—Bull Hill—OKNM 107920

The coal resource to be offered will be mined by both surface and underground mining methods in the following described lands located in LeFlore and Latimer County, Oklahoma:

T. 5 N., R. 20 E., I.M., Latimer County, Oklahoma
Sec. 9, S½S½N½NE¼, N½S½NE¼, N½S½S½NE¼, and S½NW¼;
Sec. 10, S½S½N½N½, N½S½N½, and N½S½SW¼NW¼;
Sec. 11, S½NE¼NE¼, N½N½SE¼NE¼, S½S½NW¼NW¼, and N½SW¼NW¼;
Sec. 12, S½N½NE¼NE¼, S½NE¼NE¼, S½S½NW¼NE¼, N½S½NE¼, S½N½NW¼NW¼, S½N½NW¼, and N½N½S½NW¼.

T. 5 N., R. 21 E., I. M., Latimer County, Oklahoma
Sec. 1, S½S½NW¼SW¼, N½SW¼SW¼, and N½S½SW¼SW¼;
Sec. 2, S½N½S½SW¼, S½S½SW¼, S½S½NE¼SE¼, and S½SE¼;
Sec. 3, S½S½S½SW¼, S½S½SW¼SE¼, and S½SE¼SE¼;
Sec. 7, S½N½N½NE¼, S½N½NE¼, N½S½NE¼, S½N½NE¼NW¼, S½NE¼NW¼, N½ SE¼NW¼, and beginning at the NW corner of sec. 7, proceed 330 feet south along the west line of said section to the point of beginning. Thence 990 feet south along the west line of sec. 7 to the SW corner of lot 1, thence 1,267.37 feet, N. 89° 57.5′ E., along the south line of lot 1 to the SE corner of lot 1, thence N. 0° 3′ W., 990 feet along the east line of lot 1, thence 1,264.77 feet, S. 89° 57.875′ W., to the point of beginning. All in lot 1;
Beginning at the NW corner of sec.7, proceed 1,320 feet south along the west line of said section to the point of beginning. Thence 1,267.37 feet, N. 89° 57.5′ E., along the north line of lot 2 to the NE corner of lot 2, thence 660 feet, S. 0° 3′ E., along the east line of lot 2, thence S. 89° 57.25′ W., 1,269.10 feet to the west line of lot 2, thence north along the west line of lot 2, 660 feet to the point of beginning.
All in lot 2;
Sec. 8, S½N½N½N½, and S½N½N½;
Sec. 9, N½N½;
Sec. 10, N½N½N½, N½S½NW¼NE¼, and N½S½N½N½NW¼.

T. 5 N., R. 22 E., I. M., LeFlore County, Oklahoma
Sec. 1, S½NW¼;
Sec. 2, SE¼NE¼.

T. 5 N., R. 23 E., I. M., LeFlore County, Oklahoma
Sec. 4, Beginning at the NW corner of sec. 4, T. 5 N., R. 23 E., thence S. 1° 58′ 33″ E., 381.48 feet along the west line of said section to the point of beginning. Thence N. 88° 9′ 25″ E., 2,632.42 feet, thence N. 88° 9′ 27″ E., 659.26 feet, thence S. 1° 58′ 33″ E., 660 feet, thence S. 88° 9′ 27″ W., 329.63 feet, thence S. 1° 58′ 33″ E., 330 feet, thence S. 88° 9′ 27″ W., 329.63 feet along the south line of lot 2, to the SW corner of lot 2, thence S. 88° 9′ 25″ W., 2,632.42 feet along the south lines of lots 3 and 4 to the SW corner of lot 4, thence N. 1° 58′ 33″ W., 990 feet along the west line of said section to the point of beginning;
Sec. 5, lots 3, 4, and beginning at the north quarter corner thence N. 88° 8′ 6″ E., 647.66 feet along the north line of said section, thence S. 2° 36′ 11″ E., 713.96 feet, thence N. 88° 3′ 48″ E., 659.9 feet, thence N. 88° 3′ 48″ E., 1,322.33 feet to a point on the east line of said section, thence S. 1° 58′ 33″ E., 660.06 feet along the east line of said section, thence S. 88° 3′ 57″ W., 2,634.89 feet, thence N. 2° 5′ 35″ W., 1,374.68 feet to the point of beginning;
Sec. 6, lots 1–5, N½SW¼NE¼, and N½SE¼NW¼.

T. 6 N., R. 23 E., I. M., LeFlore County, Oklahoma
Sec. 34, N½S½SE¼, N½S½S½SE¼, E½SW¼SW¼, S½SE¼SW¼, and S½N½SE¼SW¼;
Sec. 35, N½S½SW¼, N½SW¼SE¼, and S½S½N½SE¼;
Sec. 36, S½N½S½, and N½N½SE¼SW¼.

T. 6 N., R. 24 E., I. M., LeFlore County, Oklahoma
Sec. 31, lot 3, NE¼SW¼, N½NE¼SE¼, N½S½NE¼SE¼; and NW¼SE¼;
Sec. 32, N½N½S½, and N½ S½N½S½;
Sec. 33, N½N½ S½, and N½S½N½S½;
Sec. 34, N½N½SW¼, N½S½ N½SW¼ and N½SE ¼.

Containing 2,701.58 acres, more or less.

Estimated recoverable Federal reserves of bituminous coal from two splits of the Lower Hartshorne seam is 8.705 million tons; 3.541 million tons recoverable by surface mining methods, and 5.174 million tons recoverable by

underground mining methods. The proximate analysis of the coal on a received basis averages 13,450—14,000 BTU/lb., with 2.9—4.7% moisture, 0.8—1.4% sulfur, 5.6—7.1% ash, 53.5—72.3% fixed carbon, and 17.8—35.9% volatile matter. This tract has 35 qualified surface owners and 16 unqualified surface owners. Nine consent documents from qualified surface owners have been filed and verified by the BLM and meet the criteria as required by the regulations.

The leases issued as a result of this lease offering will require payment of an annual rental of $3.00 per acre or fraction thereof, and a royalty payable to the United States of 12½ percent of the value of the coal removed from a surface mine and 8 percent of the value of the coal removed from an underground mine. The value of the coal will be determined in accordance with 30 CFR 206.250.

Bidding instructions for the offered tracts and the terms and conditions of the proposed coal lease tracts are included in the Detailed Statement of Coal Lease Sale. Copies of the Statement, which includes detailed geological information on the coal and surface owners and, surface owner's consent to surface mine specific tracts, are available upon request in person or by mail from the New Mexico State Office, 1474 Rodeo Rd., Santa Fe, NM 87502 or the Oklahoma Field Office at the address shown above. The case files are available for inspection during normal business hours only at the New Mexico State Office.

Dated: July 22, 2005.

Janice L. Gamby,

Acting State Director, New Mexico.

[FR Doc. 05–16134 Filed 8–12–05; 8:45 am]

BILLING CODE 4310–FB–P

DEPARTMENT OF THE INTERIOR

Bureau of Land Management

[AK–930–04–1610–DB]

Notice of Extension of the Public Scoping Period for the South National Petroleum Reserve—Alaska Integrated Activity Plan/Environmental Impact Statement and Request for Information, Call for Nominations and Comments, and Solicitation of Interest in Hardrock and Coal Mining

AGENCY: Bureau of Land Management, Interior.

ACTION: Notice of extension.

SUMMARY: The Bureau of Land Management (BLM) announces an extension of the public scoping period on the South National Petroleum Reserve—Alaska Integrated Activity Plan/Environmental Impact Statement and an extension in the Request for Information, Call for Nominations and Comments and the solicitation of interest in hardrock and coal mining. The original notice issued June 15, 2005 provided for a scoping period and the request for other comment and information to end on August 26, 2005. BLM is extending the scoping and related comment and information gathering period through October 17, 2004 and will reschedule scoping meetings in Anaktuvuk Pass, Anchorage, Atqasuk, Barrow, Buckland, Fairbanks, Koyuk, Nome, Nuiqsut, Point Hope, Point Lay, and Wainwright.

DATES: Scoping comments and responses to the Call for Nominations will be accepted through October 17, 2005.

ADDRESSES: Scoping comments should be submitted to: South NPR—A Planning Team Leader, 222 West 7th Avenue, #13, Anchorage, Alaska 99513–7599. Responses to the Call for Nominations must be submitted in envelopes labeled ''Nominations Related to the South NPR–A IAP/EIS'' to protect the confidentiality of the nominations. They are to be addressed to: Call for Nominations, South NPR–A Team, 222 West 7th Avenue, #13, Anchorage, Alaska 99513–7599.

FOR FURTHER INFORMATION CONTACT: Jim Ducker (907–271–3130) or Susan Childs (907–271–1985) by phone or by mail at 222 West 7th Avenue, #13, Anchorage, AK 99513–7599.

SUPPLEMENTARY INFORMATION: The Notice of Intent issued on June 15, 2005 provided for scoping comments on issues relevant to the scope of the plan to be received through August 26, 2005. The Western Arctic Caribou Herd Working Group (Working Group) has requested an extension in the scoping comment period. BLM has decided to act in accordance to the Working Group's request to better accommodate the subsistence needs of local residents. Therefore, scoping comments on the issues relevant to the scope of the South Plan will now be accepted through October 17, 2005 and the scoping meeting schedule will be adjusted and announced to the public. In addition, the original Notice of Intent provided for a Call for Nominations pursuant to 43 CFR 3131.1 and 3131.2 of relevant information related to possible oil and gas leasing. The Call for Nominations is also extended through October 17, 2005.

Julia Dougan,

Associate State Director.

[FR Doc. 05–16101 Filed 8–12–05; 8:45 am]

BILLING CODE 4310–JA–P

DEPARTMENT OF THE INTERIOR

Bureau of Land Management

[CO–03–840–1610–241A]

Canyons of the Ancients National Monument Advisory Committee Meeting

AGENCY: Bureau of Land Management, Interior.

ACTION: Notice of meeting.

SUMMARY: In accordance with the Federal Land Policy and Management Act (FLPMA) and the Federal Advisory Committee Act of 1972 (FACA), the U.S. Department of the Interior, Bureau of Land Management (BLM) Canyons of the Ancients National Monument (Monument) Advisory Committee (Committee), will meet as directed below.

DATES: A meeting will be held September 6, 2005 at the Anasazi Heritage Center in Dolores, Colorado at 9 a.m. The public comment period for the meeting will begin at approximately 10:30 a.m. and the meeting will adjourn at approximately 12 p.m.

FOR FURTHER INFORMATION CONTACT: LouAnn Jacobson, Monument Manager or Stephen Kandell, Monument Planner, Anasazi Heritage Center, 27501 Hwy 184, Dolores, Colorado 81323; Telephone (970) 882–5600.

SUPPLEMENTARY INFORMATION: The eleven member committee provides counsel and advice to the Secretary of the Interior, through the BLM, concerning development and implementation of a management plan developed in accordance with FLMPA, for public lands within the Monument. At this meeting, topics we plan to discuss include the planning schedule, planning issues and management concerns, livestock grazing, and other issues as appropriate.

The meeting will be open to the public and will include a time set aside for public comment. Interested persons may make oral statements at the meeting or submit written statements at any meeting. Per-person time limits for oral statements may be set to allow all interested persons an opportunity to speak.

Summary minutes of all Committee meetings will be maintained at the

Anasazi Heritage Center in Dolores, Colorado. They are available for public inspection and reproduction during regular business hours within thirty (30) days of the meeting. In addition, minutes and other information concerning the Committee can be obtained from the Monument planning Web site at: *http://www.blm.gov/rmp/canm* which will be updated following each Committee meeting.

Dated: August 9, 2005.

Stephen J. Kandell,

Acting Monument Manager, Canyons of the Ancients National Monument.

[FR Doc. 05–16104 Filed 8–12–05; 8:45 am]

BILLING CODE 4310–JB–P

DEPARTMENT OF THE INTERIOR

Bureau of Land Management

[WY–957–05–1910–BJ–5115]

Notice of Filing of Plats of Survey, Nebraska

AGENCY: Bureau of Land Management, Interior.

SUMMARY: The Bureau of Land Management (BLM) is scheduled to file the plats of surveys of the lands described below thirty (30) calendar days from the date of this publication in the BLM Wyoming State Office, Cheyenne, Wyoming.

FOR FURTHER INFORMATION CONTACT: Bureau of Land Management, 5353 Yellowstone Road, Cheyenne, Wyoming 82009.

SUPPLEMENTARY INFORMATION: These surveys were executed at the request of the Bureau of Indian Affairs and are necessary for the management of these lands. The lands surveyed are:

The plats (in 5 sheets) representing the dependent resurvey of the First Guide Meridian East through T. 26 N., between Rs. 8 and 9 E., the Treaty Boundary of March 8, 1865, through R. 8 E., portions of the subdivisional lines and the subdivision of certain sections, the corrective dependent resurvey of a portion of the First Guide Meridian East, and the survey of the subdivision of certain sections, Township 26 North, Range 8 East, Sixth Principal Meridian, Nebraska, was accepted August 3, 2005.

Copies of the preceding described plats are available to the public.

Dated: August 3, 2005.

John P. Lee,

Chief Cadastral Surveyor, Division of Support Services.

[FR Doc. 05–15694 Filed 8–12–05; 8:45 am]

BILLING CODE 4310–22–P

DEPARTMENT OF THE INTERIOR

National Park Service

Notice of Availability of a Final Environmental Impact Statement for the Low Country Gullah Culture Special Resource Study

AGENCY: National Park Service.

ACTION: Notice.

SUMMARY: This notice is being published in accordance with 40 CFR 1506.6. Pursuant to section 102(2)(c) of the National Environmental Policy Act of 1969 the National Park Service announces the availability of a Final Environmental Impact Statement (EIS) for the Low Country Gullah Culture Special Resource Study. The document describes ways that the National Park Service can assist in preserving Gullah culture (more commonly known as Geechee in Georgia and Florida) by outlining four management alternatives for consideration by Congress, and a no-action alternative. The EIS analyzes the environmental impacts of those alternatives considered for the future protection, interpretation, and management of Gullah cultural resources. There have been no substantive changes to the alternatives as presented in the Draft EIS. The study area stretches along the southeastern United States coast roughly from the Cape Fear River in North Carolina to the St. John's River in Florida and approximately 30 miles inland.

ADDRESSES: Copies of the Final EIS are available by contacting John Barrett, National Park Service, 100 Alabama St., SW, Atlanta, GA 30303. An electronic copy of the Final EIS is available on the Internet at *http://www.nps.gov/sero/planning/gg_srs/gg_res.htm.*

SUPPLEMENTARY INFORMATION: The National Park Service held community and stakeholder meetings to gather advice and feedback on desired outcomes of the study. The meetings assisted the National Park Service in developing alternatives for managing associated cultural and natural resources and creating interpretive and educational programs. The alternatives were presented at community forums in October and November 2002. Responses from the meetings were incorporated into the four alternatives described in the study. There have been no substantive changes to the alternatives as presented in the Draft EIS.

FOR FURTHER INFORMATION CONTACT: John Barrett, 404–562–3124, extension 637.

The responsible official for this Environmental Impact Statement is Patricia A. Hooks, Regional Director, Southeast Region, National Park Service, 100 Alabama Street SW., 1924 Building, Atlanta, Georgia 30303.

Dated: July 1, 2005.

Patricia A. Hooks,

Regional Director, Southeast Region.

[FR Doc. 05–16083 Filed 8–12–05; 8:45 am]

BILLING CODE 4312–52–P

DEPARTMENT OF THE INTERIOR

National Park Service

Notice of Availability of a Draft Environmental Impact Statement for the Castillo de San Marcos National Monument General Management Plan

AGENCY: National Park Service, Interior.

ACTION: Notice.

SUMMARY: Pursuant to section 102(2) (C) of the National Environmental Policy Act of 1969 and National Park Service policy in Director's Order Number 2 (Park Planning) and Director's Order Number 12 (Conservation Planning, Environmental Impact Analysis, and Decision-making) the National Park Service announces the availability of a Draft Environmental Impact Statement/General Management Plan (DEIS/GMP) for the Castillo de San Marcos National Monument in St. Augustine, Florida. The authority for publishing this notice is contained in 40 CFR 1506.6.

The document provides a framework for management, use, and development options for the national monument by the National Park Service for the next 15–20 years. The document describes four management alternatives for consideration, including a no-action alternative that continues current management policies, and analyzes the environmental impacts of those alternatives. The Castillo de San Marcos National Monument is located on Matanzas Bay, adjacent to the historic district of St. Augustine, Florida.

DATES: There will be a 60-day comment period beginning with the Environmental Protection Agency's publication of its notice of availability in the **Federal Register**.

ADDRESSES: Copies of the DEIS are available by contacting the Park Superintendent at Castillo de San Marcos National Monument, 1 South Castillo Drive, St. Augustine, Florida 32084. An electronic copy of the DEIS is available on the Internet at *http://parkplanning.nps.gov.*

SUPPLEMENTARY INFORMATION: The National Park Service held public and stakeholder meetings and consulting party meetings as outlined in 36 CFR

800.3 to gather advice and feedback on desired outcomes for the future management of the Castillo de San Marcos National Monument. The meetings assisted the National Park Service in developing alternatives for managing the cultural and natural resources and for creating interpretive and educational programs. Responses from the meetings were incorporated into the alternatives described in the plan.

Following the public comment period, all comments will be available for public review during regular business hours. Our practice is to make comments, including names and home addresses of respondents, available for public review during regular business hours. Individual respondents may request that their name and/or home address be withheld from the rule-making record. The National Park Service will honor these requests to the extent allowed by law. If you wish us to withhold your name and/or address, you must state this prominently at the beginning of your comment. However, we will not consider anonymous comments. We will make all submissions from organizations or businesses, and from individuals identifying themselves as representatives or officials of organizations or businesses, available for public inspection in their entirety.

FOR FURTHER INFORMATION CONTACT: Gordie Wilson, (904) 829–6506, extension 221, or David Libman (404) 562–3124, extension 685.

The responsible official for this Environmental Impact Statement is Patricia A. Hooks, Regional Director, Southeast Region, National Park Service, 100 Alabama Street SW., 1924 Building, Atlanta, Georgia 30303.

Dated: July 18, 2005.

Patricia A. Hooks,

Regional Director, Southeast Region.

[FR Doc. 05–16081 Filed 8–12–05; 8:45 am]

BILLING CODE 4312–75–P

DEPARTMENT OF THE INTERIOR

National Park Service

Notice of Availability of a Draft General Management Plan, Draft Environmental Impact Statement for Great Falls Park, Virginia, a Site Within George Washington Memorial Parkway

AGENCY: National Park Service, National Capital Region.

ACTION: Notice.

SUMMARY: Pursuant to section 102(2)(c) of the National Environmental Policy Act of 1969, the National Park Service announces the availability of a draft General Management Plan and Environmental Impact Statement (GMP/EIS) for Great Falls Park, McLean, Virginia. The GMP/EIS evaluates two alternatives for the park. The document describes and analyzes the environmental impacts of one action alternative and a no-action alternative. When approved, the plan will guide management actions during the next 15–20 years.

Alternatives: In Alternative A, the no action alternative, Great Falls Park would be maintained as evolved thus far. There would not be any major changes in resources management, visitor programs, or facilities beyond regular maintenance. In Alternative B, the preferred alternative, the visitor center would be rehabilitated to improve exhibits and establish an education component on resource protection; a trail management plan and climbing management plan would be developed to reduce potential damage to sensitive cultural and natural resources. One new facility would be constructed to replace existing maintenance buildings and United States Park Police (USPP) trailer that would all be removed. The new building would accommodate park staff offices (relocated from the visitor center), maintenance personnel and equipment, law enforcement staff offices, and a holding cell. The park would also construct a USPP horse stable off Jackson Lane within the park. All of the restroom facilities would be improved and expanded at current locations.

Public Review: A 60-day public review period for comment on the draft document will begin after publication of this notice. In order to facilitate the review process, public reading copies of the GMP/EIS will be available for review at the following locations: Great Falls Park, Visitor Center, 9200 Old Dominion Drive, McLean, Virginia 22102; George Washington Memorial Parkway, Turkey Run Park, McLean, Virginia 22101; Great Falls Library, 9830 Georgetown Pike, Great Falls, Virginia 22066.

In addition, the document will be posted on the National Park Service Planning site under: *http://www.nps.gov/gwmp/grfa.* Comments on the draft DGMP/EIS should be received (or transmitted by e-mail) no later than 60 days after publication of this **Federal Register** Notice. Written comments may be submitted to: Deborah Feldman, Park Planner, George Washington Memorial Parkway, National Park Service, Turkey Run Park, McLean, Virginia 22101 or e-mailed to: *GWMP_Superintendent@nps.gov.*

All comments received will be available for public review at George Washington Memorial Parkway Headquarters. If individuals submitting comments request that their name and/or address be withheld from public disclosure, it will be honored to the extent allowable by law. Such request must be stated prominently in the beginning of the comments. There also may be circumstances wherein the National Park Service will withhold a respondent's identity as allowable by law. As always, the National Park Service will make available for public inspection all submissions from organizations or businesses and from persons identifying themselves as representatives or officials of organizations and businesses. Anonymous comments may not be considered. There will also be a public meeting with a date and location to be determined. The meeting will take place no later than two weeks prior to the closing of the public comment period. The date, time and location of the meeting will be identified in local newspapers as well as on the Internet at *http://www.nps.gov/gwmp/grfa.*

Decision Process: Notice of the availability of the final document will be published in the **Federal Register**. Subsequently, notice of an approved Record of Decision will be published in the **Federal Register** not sooner than 30 days after the final document is distributed. The official responsible for the decision is the Regional Director, National Capital Region, National Park Service; the official responsible for implementation is the Superintendent of George Washington Memorial Parkway.

FOR FURTHER INFORMATION CONTACT: Superintendent Audrey F. Calhoun, George Washington Memorial Parkway, Turkey Run Park, McLean, Virginia 22101, phone 703–289–2500, fax 703–289–2598, e-mail: *GWMP_Superintendent@nps.gov.*

Dated: July 5, 2005.

Joseph M. Lawler,

Regional Director, National Capital Region.

[FR Doc. 05–16078 Filed 8–12–05; 8:45 am]

BILLING CODE 4312–52–M

DEPARTMENT OF THE INTERIOR

National Park Service

Notice of Availability of a Record of Decision (ROD) on the Final Environmental Impact Statement/ General Management Plan (FEIS/GMP) for Big South Fork National River and Recreation Area, Kentucky and Tennessee (National Area)

AGENCY: National Park Service, Interior.

ACTION: Notice.

SUMMARY: Pursuant to section 102(2)(C) of the National Environmental Policy Act (NEPA) of 1969, 83 Stat. 852, 853, codified as amended at 42 U.S.C. 4332 (2)(C), as well as National Park Service (NPS) policy in Director's Order 2 (Park Planning) and Director's Order 12 (Conservation Planning, Environmental Impact Analysis, and Decision-making), the NPS announces the availability of the ROD for the FEIS/GMP for the National Area. On May 26, 2005, the Southeast Regional Director approved the ROD for the project. As soon as practicable, the NPS will begin to implement the GMP, described as the Preferred Alternative (Alternative D) in the FEIS issued on February 24, 2005.

Under the preferred alternative, a total of eight management zones will be created for the National Area, each of which will be attended with particularized management prescriptions. Overall, the level of development and types of facilities proposed over the planning horizon of 15 to 20 years will remain essentially the same as currently exists.

The notable exceptions include new sites in the southwest portion of the National Area where NPS has been actively acquiring land in recent years.

Under Alternative D, the NPS will devote considerable effort and resources to improving the National Area's road and trail system. A principal feature of Alternative D is a roads and trails plan that sets forth the official road and trail system for the National Area. Henceforth, public use of roads and trails will only be allowed on the official system; all trails not expressly included as part of the official system will be designated as administratively closed. In addition, public use of a particular road or trail will be limited to the designated use set forth in Alternative D, with certain limited exceptions. Each road and trail in the official system will be constructed and maintained in accordance with a standard that supports the designated use(s) and also is consistent with desired resource conditions in the surrounding area, or zone.

Alternative D increases the trail miles available to hikers, equestrians, and bicyclists from the levels currently maintained by the National Area. The official trail system includes trails specifically dedicated to each of these user groups, plus a larger universe of trails that are ''shared use.'' Generally speaking, designated horse trails will also be open to hikers and bicyclists, while designated bike trails will be open to both bicyclists and hikers. Specified hiking trails will also be open to bicyclists in order to provide more opportunities for this increasingly popular activity.

In implementing Alternative D, the NPS will continue the use of a trail type known as ''multiple-use trail.'' In the National Area, this trail type is typically known for allowing motor vehicles, horses, hikers, and bicyclists on a single route maintained to trail rather than road standards. Under Alternative D, persons driving motor vehicles that are licensed and registered may use any multiple-use trails that will accommodate such use. All Terrain Vehicles (ATVs) will generally not be permitted on any multiple-use trail, park road, or any other trail type. However, visitors will be permitted to use ATVs on multiple-use trails while actively hunting, during big game season only. Multiple-use trails will be closed to ATVs at all other times of the year. Big game season is defined for this purpose as the legal season for white-tailed deer and, in jurisdictions where they are regulated as ''big game,'' wild boar. Alternative D also provides that ATV routes for year-round general recreational use may be designated within ''planning areas'' identified for consideration of such use. The plan includes two such planning areas in the Darrow Ridge area. These planning areas will provide the opportunity to design an experimental prototype system.

Under Alternative D, the route of the old O&W railroad will provide continued passenger vehicle access to the O&W bridge from the east. The route will be improved to the extent of providing safe passage. The NPS will coordinate with Scott County on the necessary improvements to achieve desired use and resource conditions. The O&W route west of North White Oak Creek has been determined to be abandoned. This portion of the route, extending to trail connections near the western boundary of the National Area, will be a trail designated for foot, horse, and bike use, as recommended by previous studies. The route will be brought to a standard suitable for the intended trail uses.

Basis for Decision

In reaching the decision to select Alternative D, the NPS considered the purposes for which the National Area was established and other laws and policies that apply to lands in the National Area, including the NPS Organic Act, NEPA, NPS Director's Order 12, and the NPS Management Policies 2001. Alternative D has the greatest potential of all four alternatives to preserve the unique resources of the National Area while making available a wide range of recreational opportunities to the visiting public. With eight management zones specifically tailored to the diverse resources and facilities of the National Area, Alternative D provides National Area management and the public with a higher degree of information and guidance concerning objectives, management, use, and development than do the other action alternatives. In so doing, it offers the broadest level of resources protection, interpretation, visitor services, and the optimum opportunity for high quality visitor experiences. Therefore the NPS has opted to select this alternative.

Findings on Impairment

The NPS has determined that implementation of Alternative D will not constitute an impairment to the National Area's resources and values. This conclusion is based on a thorough analysis of the environmental impacts described in the EIS, the public comments received, relevant scientific studies, and the professional judgment of the decision-maker guided by the direction in the NPS Management Policies. Overall, the FEIS/GMP results in benefits to National Area resources and values and opportunities for their enjoyment, and it does not result in their impairment.

DATES: The Record of Decision was signed by the Southeast Regional Director on May 26, 2005. As soon as practicable, the NPS will begin to implement the Preferred Alternative, listed as Alternative D in the Final General Management Plan.

ADDRESSES: Copies of the ROD are available from the Superintendent, Big South Fork NRRA, 4564 Leatherwood Ford Road, Oneida, TN 37841, or by calling (423) 569–9778. An electronic copy of the Record of Decision is available on the Internet at *http://www.nps.gov/biso.*

FOR FURTHER INFORMATION CONTACT: Reed Detring, Superintendent, Big South Fork NRRA, 4564 Leatherwood Ford Road, Oneida, TN 37841. Telephone: (423) 569–9778.

SUPPLEMENTARY INFORMATION: Copies of the ROD may be obtained from the contact listed above.

The responsible official for this FEIS/GMP is Patricia A. Hooks, Regional Director, Southeast Region, National Park Service, 100 Alabama Street SW., 1924 Building, Atlanta, Georgia 30303.

Dated: July 1, 2005.

Patricia A. Hooks,

Regional Director, Southeast Region.

[FR Doc. 05–16079 Filed 8–12–05; 8:45 am]

BILLING CODE 4310–70–P

DEPARTMENT OF THE INTERIOR

National Park Service

Final Supplemental Environmental Impact Statement and Revised Comprehensive Management Plan, Merced Wild and Scenic River, Yosemite National Park, Madera, Mariposa, Merced, Mono & Tuolumne Counties, CA; Notice of Approval of Record of Decision

Summary: Pursuant to § 102(2)(C) of the National Environmental Policy Act of 1969 (Pub. L. 91–190, as amended) and the regulations promulgated by the Council on Environmental Quality (40 CFR 1505.2)—and in accord with instructions of the U.S. District Court—the Department of the Interior, National Park Service has prepared and approved a Record of Decision for the Final Supplemental Environmental Impact Statement and Merced River Revised Comprehensive Management Plan, Yosemite National Park. This programmatic Plan addresses NPS stewardship of an 81 mile segment of the 122 miles of the Merced River designated as ''Wild and Scenic'' by Congress in 1987. The requisite no-action period was initiated June 24, 2005, with the Environmental Protection Agency's **Federal Register** notification of the filing of the Final Supplemental Environmental Impact Statement (FSEIS).

Decision: As soon as practical the National Park Service will begin to implement the Revised Comprehensive Management Plan described as the Preferred Alternative (Alternative 2) contained in the FSEIS. This alternative was deemed to be the ''environmentally preferred'' alternative. This course of action and three alternatives (including no-action) were identified and analyzed in the Final and Draft Supplemental Environmental Impact Statements (the opportunity for public review of the latter was announced in the **Federal Register** on January 14, 2005). The full range of foreseeable environmental consequences were assessed, and appropriate mitigation measures have been identified.

Copies: Interested parties desiring to review the Record of Decision may obtain a copy by contacting the Superintendent, Yosemite National Park, P.O. Box 577, Yosemite, California 95389; or via telephone request at (209) 372–0201.

Dated: July 25, 2005.

Jonathan B. Jarvis,

Regional Director, Pacific West Region.

[FR Doc. 05–16080 Filed 8–12–05; 8:45 am]

BILLING CODE 4312–F4–P

DEPARTMENT OF THE INTERIOR

National Park Service

Cedar Creek and Belle Grove National Historical Park Advisory Commission; Notice of Meetings

AGENCY: National Park Service, Interior.

ACTION: Notice.

SUMMARY: Notice is hereby given in accordance with the Federal Advisory Committee Act that meetings of the Cedar Creek and Belle Grove National Historical Park Advisory Commission will be held to discuss the development of the park's general management plan.

DATES: September 15, 2005, at the Strasburg Town Hall Council Chambers, 143 East King St., Strasburg, VA; November 17, 2005, at the Middletown Town Hall Council Chambers, 7875 Church St., Middletown, VA; January 19, 2006, at the Strasburg Town Hall; March 16, 2006, at the Middletown Town Hall; May 18, 2006, at the Strasburg Town Hall; and July 20, 2006, at the Middletown Town Hall. All meetings will convene at 9 a.m.

All meetings are open to the public.

FOR FURTHER INFORMATION CONTACT: Diann Jacox, Superintendent, Cedar Creek and Belle Grove National Historical Park, (540) 868–9176.

SUPPLEMENTARY INFORMATION: Topics to be discussed at the meetings include: General management plan scoping issues, public involvement strategy, commission by-laws, election of a commission chair, planning process and schedule, commission sub-committees, park boundaries, and land protection planning.

Dated: August 5, 2005.

Diann Jacox,

Superintendent, Cedar Creek and Belle Grove National Historical Park.

[FR Doc. 05–16084 Filed 8–12–05; 8:45 am]

BILLING CODE 4312–52–M

DEPARTMENT OF THE INTERIOR

National Park Service

National Park System Advisory Board; Meeting

AGENCY: National Park Service, Interior.

ACTION: Notice of meeting.

Notice is hereby given in accordance with the Federal Advisory Committee Act, 5 U.S.C. Appendix, that the National Park System Advisory Board will meet September 8–9, 2005, in New York, New York. On September 8, the Board will tour Liberty Island, Ellis Island, and Manhattan Sites and will be briefed regarding environmental, education and partnership programs. The Board will convene its business meeting on September 9 at 8:30 a.m., e.s.t., in the Board Room of Thirteen/WNET, 450 West 33rd Street, New York, New York 10001, 202–356–5548. The meeting will be adjourned at 5 p.m. The Board will be addressed by National Park Service Director Fran Mainella and will receive the reports of its Education Committee, Committee on Federal Historic Rehabilitation Tax Credit, National Landmarks Committee, Committee on Health and Recreation, National Parks Science Committee, Committee on Philanthropy, and Partnerships Committee. The Board also will be briefed concerning civic engagement in the National Park Service.

Other officials of the National Park Service and the Department of the Interior may address the Board, and other miscellaneous topics and reports may be covered. The order of the agenda may be changed, if necessary, to accommodate travel schedules or for other reasons.

The Board meeting will be open to the public. Space and facilities to accommodate the public are limited and attendees will be accommodated on a first-come basis. Anyone may file with the Board a written statement concerning matters to be discussed. The Board also may permit attendees to address the Board, but may restrict the length of the presentations, as necessary to allow the Board to complete its agenda within the allotted time.

Anyone who wishes further information concerning the meeting, or who wishes to submit a written statement, may contact Mr. Loran Fraser, Office of Policy, National Park Service; 1849 C Street, NW., Room 7250; Washington, DC 20240; telephone 202–208–7456.

Draft minutes of the meeting will be available for public inspection about 12

weeks after the meeting, in room 7252, Main Interior Building, 1849 C Street, NW., Washington, DC.

Dated: August 2, 2005.

Bernard Fagan,

Deputy Chief, Office of Policy.

[FR Doc. 05–16082 Filed 8–12–05; 8:45 am]

BILLING CODE 4312–52–P

DEPARTMENT OF LABOR

Mine Safety and Health Administration

Proposed Information Collection Request Submitted for Public Comment and Recommendations; Noise Exposure Assessment; Audiometric Testing, Evaluation, and Records and Training in All Mines

ACTION: Notice.

SUMMARY: The Department of Labor, as part of its continuing effort to reduce paperwork and respondent burden conducts a preclearance consultation program to provide the general public and Federal agencies with an opportunity to comment on the continuing collection of information in accordance with the Paperwork Reduction Act of 1995 (PRA95) [44 U.S.C. 3506(c)(2)(A)]. This program helps to ensure that requested data can be provided in the desired format, reporting burden (time and financial resources) is minimized, collection instruments are clearly understood, and the impact of collection requirements on respondents can be properly assessed.

DATES: Submit comments on or before October 14, 2005.

ADDRESSES: Send comments to U.S. Department of Labor, Mine Safety and Health Administration, John Rowlett, Director, Management Services Division, 1100 Wilson Boulevard, Room 2134, Arlington, VA 22209–3939. Commenters are encouraged to send their comments on a computer disk, or via Internet E-mail to *Rowlett.John@dol.gov,* along with an original printed copy. Mr. Rowlett can be reached at (202) 693–9827 (voice), or (202) 693–9801 (facsimile).

FOR FURTHER INFORMATION CONTACT: Contact the employee listed in the **ADDRESSES** section of this notice.

SUPPLEMENTARY INFORMATION:

I. Background

Noise is one of the most pervasive health hazards in mining. Exposure to hazardous sound levels results in the development of occupational noise-induced hearing loss (NIHL), a serious physical, psychological, and social problem. NIHL can be distinguished from aging and medical factors, diagnosed, and prevented. NIHL is among the ''top ten'' leading occupational diseases and injuries.

For many years, the risk of acquiring an NIHL was accepted as an inevitable consequence associated with mining occupations. Miners use mechanized equipment and work under conditions that often expose them to hazardous sound levels. But MSHA standards, OSHA standards, military standards, and others around the world have been established in recognition of the controllability of this risk. Records of miner exposures are necessary so that mine operators and MSHA can evaluate the need for and effectiveness of engineering controls, administrative controls, and personal protective equipment to protect miners from harmful levels of exposure.

II. Desired Focus of Comments

Currently, the Mine Safety and Health Administration (MSHA) is soliciting comments concerning the proposed extension of the information collection related to the Noise Exposure Assessment; Audiometric Testing, Evaluation, and Records and Training in all Mines. MSHA is particularly interested in comments that:

- Evaluate whether the collection of information is necessary for the proper performance of the functions of the agency, including whether the information will have practical utility;
- Evaluate the accuracy of the agency's estimate of the burden of the collection of information, including the validity of the methodology and assumptions used;
- Enhance the quality, utility, and clarity of the information to be collected; and
- Minimize the burden of the collection of information on those who are to respond, including through the use of appropriate automated, electronic, mechanical, or other technological collection techniques or other forms of information technology, e.g., permitting electronic submissions of responses.

A copy of the proposed information collection request can be obtained by contacting the employee listed in the **ADDRESSES** section of this notice or viewed on the Internet by accessing the MSHA home page (*http://www.msha.gov*) and then choosing ''Statutory and Regulatory Information'' and ''Federal Register Documents.''

III. Current Actions

Records of miner exposures are necessary so that mine operators and MSHA can ensure that engineering controls, administrative controls, and personal protective equipment are used to protect miners from harmful levels of exposure. However, the Agency believes that extensive records for this purpose now maintained by the coal mining sector are not needed, Part 62 replaced these requirements with a performance-oriented approach to monitoring. The final rule expanded notification of exposure information to miners to assist them in becoming more active participants in hearing conservation efforts. Hearing tests of miners are offered and if a miner takes the test, mine operators are required to compile and maintain a record of each audiometric test. Detection of a hearing loss can trigger certain protective actions under Part 62. The record will be used by mine operators and MSHA to verify that the testing was done and the required actions implemented. Part 62 also requires the mine operator to provide training to overexposed miners about the hazards of noise exposure, hearing protector selection and use, the hearing test program, and the operator's noise controls. Records of training are needed to confirm that miners receive the information they need to become active participants in hearing conservation efforts. There is no existing requirement for such records; however, training records required under other MSHA regulations are used for similar purposes.

Type of Review: Extension.

Agency: Mine Safety and Health Administration.

Title: Noise exposure assessment; audiometric testing, evaluation, and records and training in all mines.

OMB Number: 1219–0120.

Affected Public: Business or other for-profit institutions.

Cite/reference	Frequency	Total responses	Burden hours
62.110(a)	Annually	6,008	15,439
62.110(c)	Occasion	70,985	7,459
62.110(d)	Occasion	226,532	19,279

Cite/reference	Frequency	Total responses	Burden hours
62.130	Occasion	26,756	3,260
62.170(b)	Occasion	169,531	14,659
62.171(b)	Occasion	37,088	3,311
62.172(a)(1)	Occasion	34,203	3,099
62.172(a)(3)	Occasion	1,905	571
62.173(a)	Occasion	240	21
62.173(b)	Occasion	244	10
62.173(c)	Occasion	244	10
62.174(a)	Occasion	4,452	384
62.175(a)(1)	Occasion	39,583	3,817
62.175(a)(2)	Occasion	5,153	512
62.180(a)	Occasion	11,022	5,386
62.180(b)	Occasion	184,285	25,060
62.190(b)	Occasion	28,685	4,575
62.190(c)	Occasion	1,165	748
Total		848,081	107,600

Total Burden Cost (capital/startup): $0.

Total Burden Cost (operating/maintaining): $4,355,111.

Comments submitted in response to this notice will be summarized and/or included in the request for Office of Management and Budget approval of the information collection request; they will also become a matter of public record.

Dated at Arlington, Virginia, this fourth day of August, 2005.

David L. Meyer,

Director, Office of Administration and Management.

[FR Doc. 05–16077 Filed 8–12–05; 8:45 am]

BILLING CODE 4510–43–P

LIBRARY OF CONGRESS

Copyright Office

[Docket No. RM 2005–7]

Satellite Home Viewer Extension and Reauthorization Act of 2004

AGENCY: Copyright Office, Library of Congress.

ACTION: Extension of comment period.

SUMMARY: The Copyright Office of the Library of Congress is extending the time in which comments can be filed in response to its Notice of Inquiry requesting information for the preparation of the first report to the Congress required by the Satellite Home Viewer Extension and Reauthorization Act of 2004.

DATES: Comments are due no later than September 1, 2005. Reply comments are due no later than September 22, 2005.

ADDRESSES: If hand delivered by a private party, an original and five copies of a comment should be brought to Room LM–401 of the James Madison Memorial Building between 8:30 a.m. and 5 p.m. and the envelope should be addressed as follows: Office of the General Counsel, U.S. Copyright Office, James Madison Memorial Building, Room LM–401, 101 Independence Avenue, SE, Washington, DC 20559–6000. If delivered by a commercial courier, an original and five copies of a comment must be delivered to the Congressional Courier Acceptance Site located at 2nd and D Streets, NE, between 8:30 a.m. and 4 p.m. The envelope should be addressed as follows: Office of the General Counsel, Room LM–403, James Madison Memorial Building, 101 Independence Avenue, SE, Washington, DC. If sent by mail (including overnight delivery using U.S. Postal Service Express Mail), an original and five copies of a comment should be addressed to U.S. Copyright Office, Copyright GC/I&R, P.O. Box 70400, Southwest Station, Washington, DC 20024. Comments may not be delivered by means of overnight delivery services such as Federal Express, United Parcel Service, etc., due to delays in processing receipt of such deliveries.

FOR FURTHER INFORMATION CONTACT: Tanya Sandros, Associate General Counsel, Copyright GC/I&R, P.O. Box 70400, Southwest Station, Washington, DC 20024. Telephone: (202) 707–8380. Telefax: (202) 707–8366.

SUPPLEMENTARY INFORMATION: On December 8, 2004, the President signed the Satellite Home Viewer Extension and Reauthorization Act of 2004 (''SHVERA''), a part of the Consolidated Appropriations Act of 2005, Pub. L. No. 108–447. In addition to extending for an additional five years the statutory license for satellite carriers retransmitting over–the–air television broadcast stations to their subscribers and making a number of amendments to the existing section 119 of the Copyright Act, SHVERA directs the Copyright Office to conduct two studies and report its findings to the Committee on the Judiciary of the House of Representatives and the Committee on the Judiciary of the Senate. One study, due by December 31, 2005, requires the Office to examine select portions of the section 119 license and to determine what, if any, impact sections 119 and 122 have had on copyright owners whose programming is transmitted by satellite carriers. To assist in the preparation of this study, the Office published a Notice of Inquiry seeking comments on questions posed regarding various aspects of the study. *See* 70 FR 39343 (July 7, 2005). Initial comments were due to be filed on August 22, 2005; reply comments were due to be filed on September 12, 2005.

The Copyright Office has received a request from various potential commenters to extend the comment period by 10 days in order to allow sufficient time to provide the Office with comprehensive comments. Given the complexity of the issues raised by the study, the Office has decided to extend the deadline for filing comments by a period of 10 days, making initial comments due on September 1, 2005; likewise, the period for filing reply comments also will be extended by 10 days, making reply comments due on September 22, 2005.

Dated: August 10, 2005

Jule L. Sigall,

Acting Register of Copyrights.

[FR Doc. 05–16125 Filed 8–12–05; 8:45 am]

BILLING CODE 1410–33–S

NATIONAL FOUNDATION ON THE ARTS AND THE HUMANITIES

National Endowment for the Arts; Arts Advisory Panel

Pursuant to section 10(a)(2) of the Federal Advisory Committee Act (Pub. L. 92–463), as amended, notice is hereby given that four meetings of the Arts Advisory Panel to the National Council on the Arts will be held at the Nancy Hanks Center, 1100 Pennsylvania Avenue, NW., Washington, DC 20506 as follows:

Literature (Creative Writing Fellowships): September 14–16, 2005 in Room 716. A portion of this meeting, from 11:30 a.m. to 12:30 p.m. on Friday, September 16th, will be open to the public for policy discussion. The remainder of the meeting, from 9 a.m. to 7 p.m. on September 14th, from 9 a.m. to 6:30 p.m. on September 15th, and from 9 a.m. to 11:30 a.m. and 12:30 p.m. to 3 p.m. on September 16th, will be closed.

Arts Education (Learning in the Arts for Children & Youth Panel #1): September 22–23, 2005 in Room 716. A portion of this meeting, from 3:30 p.m. to 4:15 p.m. on Friday, September 23rd, will be open to the public for policy discussion. The remainder of the meeting, from 9 a.m. to 5:45 p.m. on September 22nd and from 9 a.m. to 3:30 p.m. and from 4:15 p.m. to 4:45 p.m. on September 23rd, will be closed.

Arts Education (Learning in the Arts for Children & Youth Panel #2): October 3, 2005 in Room 716. A portion of this meeting, from 3 p.m. to 3:45 p.m., will be open to the public for policy discussion. The remainder of the meeting, from 9 a.m. to 3 p.m. and 3:45 p.m. to 4:30 p.m., will be closed.

Arts Education (Learning in the Arts for Children & Youth Panel #3): October 5–7, 2005 in Room 716. A portion of this meeting, from 3:30 p.m. to 4:15 p.m. on Friday, October 7th, will be open to the public for policy discussion. The remainder of the meeting, from 9 a.m. to 6 p.m. on October 5th and October 6th, and from 9 a.m. to 3:30 p.m. and from 4:15 p.m. to 5 p.m. on October 7th, will be closed.

The closed portions of meetings are for the purpose of Panel review, discussion, evaluation, and recommendations on financial assistance under the National Foundation on the Arts and the Humanities Act of 1965, as amended, including information given in confidence to the agency. In accordance with the determination of the Chairman of April 8, 2005, these sessions will be closed to the public pursuant to subsection (c)(6) of section 552b of title 5, United States Code.

Any person may observe meetings, or portions thereof, of advisory panels that are open to the public, and if time allows, may be permitted to participate in the panel's discussions at the discretion of the panel chairman. If you need special accommodations due to a disability, please contact the Office of AccessAbility, National Endowment for the Arts, 1100 Pennsylvania Avenue, NW., Washington, DC 20506, 202/682–5532, TDY–TDD 202/682–5496, at least seven (7) days prior to the meeting.

Further information with reference to this meeting can be obtained from Ms. Kathy Plowitz-Worden, Office of Guidelines & Panel Operations, National Endowment for the Arts, Washington, DC 20506, or call 202/682–5691.

Dated: August 9, 2005.

Kathy Plowitz-Worden,

Panel Coordinator, Panel Operations, National Endowment for the Arts.

[FR Doc. 05–16126 Filed 8–12–05; 8:45 am]

BILLING CODE 7537–01–P

NATIONAL SCIENCE FOUNDATION

Committee Management; Notice of Establishment

The Director of the National Science Foundation has determined that the establishment of the Advisory Committee for Cyberinfrastructure is necessary and in the public interest in connection with the performance of duties imposed upon the National Science Foundation (NSF), by 42 U.S.C. 1861 *et seq.* This determination follows consultation with the Committee Management Secretariat, General Services Administration.

Name of Committee: Advisory Committee for Cyberinfrastructure (#25150).

Purpose: Provide perspective and advice to the Cyberinfrastructure Council (CIC) of the National Science Foundation on the agency's plans and programmatic strategies to develop and support a state-of-the-art cyberinfrastructure that enables significant advances in fields of science and engineering.

Responsible NSF Official: Deborah Crawford, Office of Cyberinfrastrucutre, National Science Foundation, 4201 Wilson Boulevard, Arlington, VA 22230. Telephone: (703) 292–8900.

Dated: August 10, 2005.

Susanne Bolton,

Committee Management Officer.

[FR Doc. 05–16108 Filed 8–12–05; 8:45 am]

BILLING CODE 7555–01–M

PENSION BENEFIT GUARANTY CORPORATION

Required Interest Rate Assumption for Determining Variable-Rate Premium; Interest Assumptions for Multiemployer Plan Valuations Following Mass Withdrawal

AGENCY: Pension Benefit Guaranty Corporation.

ACTION: Notice of interest rates and assumptions.

SUMMARY: This notice informs the public of the interest rates and assumptions to be used under certain Pension Benefit Guaranty Corporation regulations. These rates and assumptions are published elsewhere (or can be derived from rates published elsewhere), but are collected and published in this notice for the convenience of the public. Interest rates are also published on the PBGC's Web site (*http://www.pbgc.gov*).

DATES: The required interest rate for determining the variable-rate premium under part 4006 applies to premium payment years beginning in August 2005. The interest assumptions for performing multiemployer plan valuations following mass withdrawal under part 4281 apply to valuation dates occurring in September 2005.

FOR FURTHER INFORMATION CONTACT: Catherine B. Klion, Attorney, Legislative and Regulatory Department, Pension Benefit Guaranty Corporation, 1200 K Street, NW., Washington, DC 20005, 202–326–4024. (TTY/TDD users may call the Federal relay service toll-free at 1–800–877–8339 and ask to be connected to 202–326–4024.)

SUPPLEMENTARY INFORMATION:

Variable-Rate Premiums

Section 4006(a)(3)(E)(iii)(II) of the Employee Retirement Income Security Act of 1974 (ERISA) and § 4006.4(b)(1) of the PBGC's regulation on Premium Rates (29 CFR part 4006) prescribe use of an assumed interest rate (the ''required interest rate'') in determining a single-employer plan's variable-rate premium. Pursuant to the Pension Funding Equity Act of 2004, for premium payment years beginning in 2004 or 2005, the required interest rate is the ''applicable percentage'' (currently 85 percent) of the annual rate of interest determined by the Secretary of the Treasury on amounts invested conservatively in long-term investment grade corporate bonds for the month preceding the beginning of the plan year for which premiums are being paid. Thus, the required interest rate to be used in determining variable-rate premiums for premium payment years

beginning in August 2005 is 4.56 percent (*i.e.*, 85 percent of the 5.37 percent composite corporate bond rate for July 2005 as determined by the Treasury).

The following table lists the required interest rates to be used in determining variable-rate premiums for premium payment years beginning between September 2004 and August 2005.

For premium payment years beginning in:	The required interest rate is:
September 2004	4.95
October 2004	4.79
November 2004	4.73
December 2004	4.75
January 2005	4.73
February 2005	4.66
March 2005	4.56
April 2005	4.78
May 2005	4.72
June 2005	4.60
July 2005	4.47
August 2005	4.56

Multiemployer Plan Valuations Following Mass Withdrawal

The PBGC's regulation on Duties of Plan Sponsor Following Mass Withdrawal (29 CFR part 4281) prescribes the use of interest assumptions under the PBGC's regulation on Allocation of Assets in Single-Employer Plans (29 CFR part 4044). The interest assumptions applicable to valuation dates in September 2005 under part 4044 are contained in an amendment to part 4044 published elsewhere in today's **Federal Register**. Tables showing the assumptions applicable to prior periods are codified in appendix B to 29 CFR part 4044.

Issued in Washington, DC, on this 8th day of August, 2005.

Vincent K. Snowbarger,

Deputy Executive Director, Pension Benefit Guaranty Corporation.

[FR Doc. 05–16098 Filed 8–12–05; 8:45 am]

BILLING CODE 7708–01–P

OFFICE OF PERSONNEL MANAGEMENT

Submission for OMB Review; Comment Request for Review of a Revised Information Collection: OPM 2809

AGENCY: Office of Personnel Management.

ACTION: Notice.

SUMMARY: In accordance with the Paperwork Reduction Act of 1995 (Pub. L. 104–13, May 22, 1995), this notice announces that the Office of Personnel Management (OPM) has submitted to the Office of Management and Budget (OMB) a request for review of a revised information collection. OPM 2809, Health Benefits Election Form, is used by annuitants and former spouses to elect, cancel, suspend or change health benefits enrollment during periods other than open season.

There are approximately 30,000 changes to health benefits coverage per year. Of these, 20,000 are submitted on OPM Form 2809 and 10,000 verbally or in written correspondence. Each form takes approximately 45 minutes to complete; data collection by telephone or mail takes approximately 10 minutes. The annual burden for the form is 15,000 hours; the burden not using the form is 1,667 hours. The total burden is 16,667 hours.

For copies of this proposal, contact Mary Beth Smith-Toomey on (202) 606–8358, FAX (202) 418–3251 or via e-mail to *mbtoomey@opm.gov*. Please include a mailing address with your request.

DATES: Comments on this proposal should be received within 30 calendar days from the date of this publication.

ADDRESSES: Send or deliver comments to—Pamela Israel, Chief, Operations Support Group, Retirement Services Program, U.S. Office of Personnel Management, 1900 E Street, NW., Room 3349, Washington, DC 20415; and Brenda Aguilar, OPM Desk Officer, Office of Information and Regulatory Affairs, Office of Management and Budget, New Executive Office Building, NW., Room 10235, Washington, DC 20503.

FOR FURTHER INFORMATION CONTACT: Cyrus S. Benson, Team Leader, Publications Team, Administrative Services Branch, (202) 606–0623.

Office of Personnel Management.

Linda M. Springer,

Director.

[FR Doc. 05–16091 Filed 8–12–05; 8:45 am]

BILLING CODE 6325–38–P

RAILROAD RETIREMENT BOARD

Agency Forms Submitted for OMB Review

Summary: In accordance with the Paperwork Reduction Act of 1995 (44 U.S.C. Chapter 35), the Railroad Retirement Board (RRB) has submitted the following proposal(s) for the collection of information to the Office of Management and Budget for review and approval.

Summary of Proposal(s)

(1) *Collection title:* Student Beneficiary Monitoring.

(2) *Form(s) submitted:* G–315, G–315A, G–315A.1.

(3) *OMB Number:* 3220–0123.

(4) *Expiration date of current OMB clearance:* 01/31/2007.

(5) *Type of request:* Revision of a currently approved collection.

(6) *Respondents:* Individuals or households, business or other for-profit, non-profit institutions.

(7) *Estimated annual number of respondents:* 900.

(8) *Total annual responses:* 900.

(9) *Total annual reporting hours:* 217.

(10) *Collection description:* Under the Railroad Retirement Act (RRA), a student benefit is not payable if the student ceases full-time school attendance, marries, works in the railroad industry, has excessive earnings or attains the upper age limit under the RRA. The report obtains information to be used in determining if benefits should cease or be reduced.

Additional Information or Comments: Copies of the forms and supporting documents can be obtained from Charles Mierzwa, the agency clearance officer at (312) 751–3363 or *Charles.Mierzwa@RRB.GOV*.

Comments regarding the information collection should be addressed to

Ronald J. Hodapp, Railroad Retirement Board, 844 North Rush Street, Chicago, Illinois, 60611–2092 or *Ronald.Hodapp@RRB.GOV* and to the OMB Desk Officer for the RRB, at the Office of Management and Budget, Room 10230, New Executive Office Building, Washington, DC 20503.

Charles Mierzwa,

Clearance Officer.

[FR Doc. 05–16124 Filed 8–12–05; 8:45 am]

BILLING CODE 7905–01–P

SECURITIES AND EXCHANGE COMMISSION

[Release No. 35–28014]

Filings Under the Public Utility Holding Company Act of 1935, as Amended (''Act'')

August 9, 2005.

Notice is hereby given that the following filing(s) has/have been made with the Commission under provisions of the Act and rules promulgated under the Act. All interested persons are referred to the application(s) and/or declaration(s) for complete statements of the proposed transaction(s) summarized below. The application(s) and/or declaration(s) and any amendment(s) is/are available for public inspection through the Commission's Branch of Public Reference. Interested persons wishing to comment or request a hearing on the application(s) and/or declaration(s) should submit their views in writing by September 5, 2005, to the Secretary, Securities and Exchange Commission, 100 F Street, NE., Washington, DC 20549–9303, and serve a copy on the relevant applicant(s) and/or declarant(s) at the address(es) specified below. Proof of service (by affidavit or, in the case of an attorney at law, by certificate) should be filed with the request. Any request for hearing should identify specifically the issues of facts or law that are disputed. A person who so requests will be notified of any hearing, if ordered, and will receive a copy of any notice or order issued in the matter. After September 5, 2005, the application(s) and/or declaration(s), as filed or as amended, may be granted and/or permitted to become effective.

Energy East Corporation, et al. (70–10298)

Energy East Corporation (''Energy East''), P.O. Box 12904, Albany, New York, 12212, a registered holding company under the Act and its direct and indirect subsidiaries listed below (collectively, ''Applicants''), have filed with the Securities and Exchange Commission (''Commission'') an application (''Application'') under sections 6(a), 7, 9(a), 10, 12(b), 12(c), 13(b), 32 and 33 of the Act and rules 45, 46, 54, and 80–92 under the Act. The other Applicants are: (1) Energy East Enterprises, Inc. (''Energy East Enterprises''), a wholly owned subsidiary of Energy East and a public utility holding company exempt from registration by order of the Commission under section 3(a)(1) of the Act and Energy East Enterprises' subsidiaries Maine Natural Gas Corporation (''Maine Natural Gas'') and Energy East Capital Trust 1, each at P.O. Box 12904, Albany, New York, 12212; (2) RGS Energy Group, Inc., (''RGS'') a wholly owned subsidiary of Energy East and a public utility holding company exempt from registration by order of the Commission under section 3(a)(1) of the Act and RGS Energy's gas and electric utility subsidiaries New York State Electric & Gas Corporation (''NYSEG'') and Rochester Gas and Electric Corporation (''RG&E), each of 89 East Avenue, Rochester, New York, 14649; (3) CMP Group, Inc. (''CMP Group''), a wholly owned subsidiary of Energy East and a public utility holding company exempt from registration by order of the Commission under section 3(a)(1) of the Act and CMP's subsidiaries Central Maine Power Company (''Central Maine''), a public utility holding company exempt from registration by order of the Commission under section 3(a)(1) of the Act and Maine Electric Power Company, Inc. (''MEPCo''), a majority owned electric utility subsidiary, each of 83 Edison Drive, Augusta Maine 04336; (4) NORVARCO, a wholly owned subsidiary of Central Maine Power Company of 83 Edison Drive, Augusta, Maine, 04336; (5) Connecticut Energy Corporation (''Connecticut Energy''), a wholly owned subsidiary of Energy East and a public utility holding company exempt from registration by order of the Commission under section 3(a)(1) of the Act and Connecticut Energy's subsidiary The Southern Connecticut Gas Company (''Southern Connecticut Gas''), each of 855 Main Street, Bridgeport, Connecticut, 06604; (6) CTG Resources, Inc. (''CTG''), a wholly owned subsidiary of Energy East and a public utility holding company exempt from registration by order of the Commission under section 3(a)(1) of the Act and CTG's subsidiary Connecticut Natural Gas Corporation (''Connecticut Natural Gas''), each of 10 State House Square, Hartford, Connecticut, 06144; and (7) Berkshire Energy Resources (''Berkshire Energy''), a wholly owned subsidiary of Energy East and a public utility holding company exempt from registration by order of the Commission under section 3(a)(1) of the Act; and Berkshire Energy's subsidiary The Berkshire Gas Company (''Berkshire Gas''), each of 115 Cheshire Road, Pittsfield, Massachusetts, 01201.

I. Introduction

A. Authorization Period

Applicants seek authorization under the Act to engage in various financing transactions discussed below through September 30, 2008 (''Authorization Period'') and to retain certain Intermediate Holding Companies, as defined below.[1] However, Applicants request that any Commission order granting the requests made in the Application not impose any obligation or requirement on the Applicants that survives the effective date of repeal of the Act.

B. Description of Energy East and Its Subsidiaries

1. Energy East

Energy East is currently a registered public utility holding company, and directly neither owns nor operates any physical properties.[2] Through its subsidiaries (which includes all of Energy East's Utility Subsidiaries, the Intermediate Holding Companies and the Non-utility Subsidiaries, as defined below), Energy East is an energy services and delivery company with operations in New York, Connecticut, Massachusetts, Maine and New Hampshire serving approximately 1.8 million electricity customers and 900,000 natural gas customers.

2. Public Utility Operations

Energy East holds direct or indirect interests in nine public utility companies (collectively, ''Utility Subsidiaries''), each of which is wholly owned by companies within the Energy East system unless otherwise noted:

[1] Energy East currently has authority to engage in various financing transactions through September 30, 2005. *See* Holding Company Act Release No. 27228 (Sept. 12, 2000); Holding Company Act Release No. 27643 (Jan. 28, 2003); and Holding Company Act Release No. 27794.

[2] Pursuant to Commission order dated March 4, 1998 (HCAR No. 25–26834), Energy East became the parent of New York State Electric & Gas Corporation. Pursuant to Commission order dated February 2, 2000 (HCAR No. 35–27128), Energy East became the parent of Connecticut Energy Corporation. Pursuant to Commission order dated August 31, 2000 (HCAR 35–27224), Energy East became the parent of CMP Group, Inc., CTG Resources, Inc. and Berkshire Energy Resources. Pursuant to Commission order dated June 27, 2002 (HCAR No. 35–27546), Energy East became the parent of RGS Energy Group, Inc.

(a) NYSEG, a wholly-owned subsidiary of RGS, which purchases, transmits and distributes electricity and natural gas in parts of New York;

(b) RG&E a wholly-owned subsidiary of RGS, which generates, purchases, transmits and distributes electricity and purchases, transports and distributes natural gas in parts of New York;

(c) Southern Connecticut Gas a wholly-owned subsidiary of Connecticut Energy, which is primarily engaged in the retail distribution and transportation of natural gas in parts of Connecticut;

(d) Connecticut Natural Gas a wholly-owned subsidiary of CTG Resources, which is primarily engaged in the retail distribution and transportation of natural gas to parts of Connecticut;

(e) Berkshire Gas a wholly-owned subsidiary of Berkshire Energy, which is primarily engaged in the retail distribution and transportation of natural gas to parts of Massachusetts;

(f) Central Maine a wholly-owned by CMP Group and which is primarily engaged in purchasing, transmitting and distributing electricity in Maine;

(g) Maine Natural Gas Corporation a wholly-owned subsidiary of Energy East Enterprises;

(h) MEPCo which owns and operates a 345kV transmission interconnection between the Maine/New Brunswick, Canada international border at Orient, Maine. Central Maine presently owns a 78.3% voting interest in MEPCo with the remaining interests owned by two other Maine utilities; and

(i) NORVARCO, which holds a 50% general partnership interest in Chester SVC Partnership (''Chester''), a general partnership which owns a static var compensator located in Chester, Maine, adjacent to MEPCo's transmission interconnection. NORVARCO is a wholly-owned subsidiary of Central Maine.

3. Non-Utility Subsidiaries

Energy East also has a number of direct and indirect subsidiaries that are not ''public utility companies'' under the Act (the ''Non-utility Subsidiaries''):

(a) RGS, the parent of NYSEG and RG&E;

(b) Berkshire Energy, the parent of Berkshire Gas;

(c) CMP Group, the parent of Central Maine, MEPCo, and NORVARCO;

(d) Connecticut Energy, the parent of Southern Connecticut Gas;

(e) CTG Resources, the parent of Connecticut Natural Gas;

(f) The Energy Network, Inc., whose subsidiaries focus on peaking generation and the retail marketing of electricity and natural gas;

(g) Energy East Enterprises, the parent of Maine Natural Gas and New Hampshire Gas, and is developing gas storage in upstate New York through a wholly-owned subsidiary, Seneca Lake Storage Inc.;

(h) Energy East Management Corporation and Utility Shared Services Corporation, each of which are Commission authorized service companies for the Energy East holding company system which own no public utility assets;

(i) Energy East Capital Trust I, a statutory business trust formed for the purpose of issuing trust preferred securities;

(j) TEN Companies, Inc. (''TEN Companies''), which owns and manages a district heating and cooling network in Hartford, Connecticut and owns an interest in the Iroquois Gas Transmission System;

(k) CNE Energy Services Group, which has an interest in two small natural gas pipelines that serve power plants in Connecticut and also leases a liquefied natural gas plant that provides peaking gas in the Northeast and has an equity interest in an energy technology venture partnership;

(l) The Union Water-Power Company, which provides energy services throughout New England and New York State;

(m) Energy East Telecommunications, which owns fiber optic lines in central New York that it leases to retail communications companies;

(n) MaineCom Services, which owns fiber optic lines and provides telecommunications services in Maine; and

(o) Energetix, Inc. and NYSEG Solutions, Inc., which market electricity and natural gas services throughout upstate and central New York.

RGS, Berkshire Energy, CMP Group, Central Maine, Connecticut Energy, CTG Resources and Energy East Enterprises are all public utility holding companies exempt from all provisions of the Act except Section 9(a)(2). These companies are also referred to collectively as the ''Intermediate Holding Companies.''

4. Capital Structure of Energy East

Energy East is authorized under its Restated Certificate of Incorporation, as amended, to issue 300,000,000 shares of common stock, par value $.01 per share and 10,000,000 shares of preferred stock, par value $.01 per share. At December 31, 2004, Energy East had issued and outstanding 147,118,329 shares of common stock. Energy East's shares are listed on the New York Stock Exchange.

Energy East's consolidated capitalization (including short-term debt) at March 31, 2005 was as follows:

	Book value (millions)	Percentage of total (percent)
Common Stock Equity *	2,832	41
Preferred Stock	47	1
Long-Term Debt	3,771	55
Short-Term Debt **	182	3
Total	6,832	100.0

* Including minority interests.
** Including current portion of long-term debt.

Energy East's senior unsecured debt is currently rated BBB by Standard & Poor's Inc. (''S&P''), Baa2 by Moody's Investor Service (''Moody's'') and BBB by Fitch IBCA Inc. (''Fitch''). To the extent it is rated, the senior unsecured debt of the Utility Subsidiaries is rated as follows:

	S&P	Moody's	Fitch
Central Maine	BBB+	A3	A−
NYSEG	BBB+	Baa1	BBB+
RG&E	BBB	Baa1	BBB

	S&P	Moody's	Fitch
Connecticut Natural Gas	BBB+	A3	A–
Southern Connecticut Natural Gas	n/a	n/a	A–

The Intermediate Holding Companies do not currently have external debt.

II. Request for Financing Authority

A. Energy East External Financing

1. General

Energy East requests authorization to issue and sell common stock, preferred stock, preferred securities, equity-linked securities, options, warrants, purchase contracts, units (consisting of one or more purchase contracts, warrants, debt securities, shares of preferred stock, shares of common stock or any combination of these securities), long-term debt, subordinated debt, bank borrowings, securities with call or put options, and securities convertible into any of these securities.[3] The aggregate amount of new financing obtained by Energy East during the Authorization Period (exclusive of short-term debt), through the issuance of securities, in each case valued at the time of issuance, shall not exceed $3.9 billion outstanding at any one time (''Energy East External Limit''),[4] provided that securities issued for purposes of refunding or replacing other outstanding securities where Energy East's capitalization is not increased from that in place on December 31, 2004 shall not be counted against this limitation.[5]

In addition, Energy East requests authority to issue and sell from time to time, directly or indirectly through one or more financing subsidiaries, short-term debt, including commercial paper and bank borrowings, in an aggregate principal amount at any time outstanding during the Authorization Period not to exceed $750 million (''Energy East Short-term Limit''), provided that securities issued for purposes of refunding or replacing other outstanding short-term debt securities where Energy East's capitalization is not increased shall not be counted against this limitation.

All securities issued by Energy East in accordance with the authorization requested, including, without limitation, securities issued for the purpose of refunding or retiring outstanding securities, will comply with the applicable financing parameters set forth below. Further, the aggregate principal amount of all indebtedness of Energy East issued and outstanding during the Authorization Period shall not exceed $2.3 billion (the ''Energy East Debt Limitation'').

Energy East contemplates that securities will be issued and sold directly to one or more purchasers in privately-negotiated transactions or to one or more investment banking or underwriting firms or other entities who will resell the securities without registration under the Securities Act of 1933, as amended (''1933 Act'') in reliance upon one or more applicable exemptions from registration, or to the public either (a) through underwriters selected by negotiation or competitive bidding or (b) through selling agents acting either as agent or as principal for resale to the public either directly or through dealers. If underwriters are used, the securities will be acquired by the underwriters for their own account and may be resold from time to time in one or more transactions, including negotiated transactions, at a fixed public offering price or at varying prices determined at the time of sale. Securities may be offered to the public either through underwriting syndicates (which may be represented by a managing underwriter or underwriters designated by Energy East) or directly by one or more underwriters acting alone, or may be sold directly by Energy East or through agents designated by Energy East from time to time. If dealers are utilized, Energy East will sell the securities to the dealers, as principals. Any dealer may then resell the securities to the public at varying prices to be determined by the dealer at the time of resale. If common stock is being sold in an underwritten offering, Energy East may grant the underwriters a ''green shoe'' option permitting the purchase from Energy East at the same price additional shares then being offered solely for the purpose of covering over-allotments.

2. Common Stock

Energy East may issue and sell common stock, or options, warrants or other stock purchase rights exercisable for common stock, pursuant to underwriting agreements of a type generally standard in the industry. Public distributions may be pursuant to private negotiation with underwriters, dealers or agents, or effected through competitive bidding among underwriters. In addition, sales may be made through private placements or other non-public offerings to one or more persons. All common stock sales will be at rates or prices and under conditions negotiated or based upon, or otherwise determined by, competitive capital markets. Energy East may also issue common stock or options, warrants or other stock purchase rights exercisable for common stock in public or privately-negotiated transactions as consideration for the equity securities or assets of other companies, provided that the acquisition of any equity securities or assets has been authorized in a separate proceeding or is exempt under the Act or the rules under the Act (*e.g.*, rule 58).[6]

Energy East also proposes to issue common stock and/or purchase shares of its common stock (either currently or under forward contracts) in the open market for purposes of (a) reissuing the shares at a later date pursuant to stock-based plans which are maintained for stockholders, employees and nonemployee directors or (b) managing its capital structure. Energy East may make open-market purchases of common stock in accordance with the terms of, or in connection with, the operation of the plans, or as part of a program to repurchase its securities generally. Stock repurchases would be conducted through open market transactions and could include the acquisition at arm's-length of Energy East common stock from institutional investors that may have an affiliate interest in Energy East.

Energy East currently has in effect certain stock based plans which authorize grants of its common stock, stock options and other stock-based awards to eligible employees and directors. Energy East may issue shares of its common stock under the

[3] Any convertible or equity-linked securities would be convertible into or linked only to common stock, preferred securities or unsecured debt securities that Energy East is otherwise authorized to issue directly or indirectly through a financing entity on behalf of Energy East.

[4] Because the limit applies only to securities issued and outstanding during the Authorization Period, when a security is issued during the Authorization Period and later redeemed or retired during the Authorization Period, the aggregate amount issued and outstanding under the limit is reduced and additional financing capacity under the limit is made available.

[5] Any refunding or replacement of securities where capitalization is not increased will be through the issuance of securities of the type authorized by the Commission.

[6] Energy East will value the equity issued in those circumstances in accordance with the agreement negotiated between the purchaser and the seller.

authorization and within the limitations set forth herein in order to satisfy any of its obligations under all the plans and under plans which replace any plans currently in effect. Energy East requests authorization to issue and/or sell shares of common stock pursuant to these existing and future stock plans and employee or director plans without any additional prior Commission order. The market value at the time of issuance of stock under stock-based compensation programs would count against the Energy East External Limit. Energy East common stock issued pursuant to an option would count against the Energy East External Limit at the time, if any, that the option is exercised.

Energy East also has a dividend reinvestment plan under which shares of its common stock may be issued to shareholders reinvesting cash dividends and/or making optional cash investments to purchase additional shares of common stock. Energy East seeks authority for the issuance and sale of its shares in accordance with its dividend reinvestment plan under the authorization and within the limitations set forth in the Application.

Energy East proposes to issue shares of its common stock under the authorization and within the limitations set forth in the Application in order to satisfy its obligations under each of these existing stock-based plans, as they may be amended or extended, and similar future plan funding arrangements adopted without any additional Commission order. Shares of common stock issued under these plans may either be newly issued shares, treasury shares or shares purchased in the open market. The market value of newly issued shares will be counted against the Energy East External Limit.

3. Preferred Stock, Preferred Securities and Equity-Linked Securities

Energy East also proposes to issue and sell preferred stock directly and/or issue, indirectly through one or more financing subsidiaries, other forms of preferred securities (including, without limitation, trust preferred securities or monthly income preferred securities). Preferred stock and other forms of preferred securities may be issued in one or more series with the rights, preferences, and priorities as may be designated in the instrument creating each the series, as determined by Energy East's board of directors, and may be convertible or exchangeable into shares of Energy East common stock or unsecured indebtedness. Dividends or distributions on the securities will be made periodically and to the extent funds are legally available for the purpose, but may be made subject to terms which allow the issuer to defer dividend payments for specified periods. Energy East may also issue and sell equity-linked securities in the form of stock purchase units, which combine a security with a fixed obligation (*e.g.*, preferred stock or debt) with a stock purchase contract that is exercisable (either mandatorily or at the option of the holder).[7] The dividend or distribution rates, interest rates, redemption and sinking fund provisions, conversion features, if any, and maturity dates with respect to the preferred stock or other types of preferred securities and equity-linked securities of a particular series, as well as any associated placement, underwriting or selling agent fees, commissions and discounts, if any, will be established by Energy East's board of directors, negotiation or competitive bidding.

Energy East contemplates that the preferred stock would be issued and sold directly to one or more purchasers in privately-negotiated transactions or to one or more investment banking or underwriting firms or other entities who would resell the preferred stock either without registration under the 1933 Act in reliance upon one or more applicable exemptions from registration, or to the public either (a) through underwriters selected by negotiation or competitive bidding or (b) through selling agents acting either as agent or as principal for resale to the public either directly or through dealers.

4. Long-Term Debt

Long-term debt would be unsecured and may be issued directly through a public or private placement or indirectly through one or more financing subsidiaries, in the form of notes, convertible notes, medium-term notes or debentures under one or more indentures, or long-term indebtedness under agreements with banks or other institutional lenders. The maturity dates, interest rates, redemption and sinking fund provisions and conversion features, if any, with respect to the long-term debt of a particular series, as well as any associated placement, underwriting or selling agent fees, commissions and discounts, if any, will be established by negotiation or competitive bidding at the time of issuance.[8]

Energy East also requests authorization to issue and sell from time to time during the Authorization Period debentures in one or more series, subject to the Energy East Debt Limitation. The debentures (a) may be convertible into any other securities of Energy East, (b) will have maturities ranging from one to 50 years, (c) may be subject to optional and/or mandatory redemption, in whole or in part, at par or at various premiums above the principal amount thereof, (d) may be entitled to mandatory or optional sinking fund provisions, (e) may provide for reset of the coupon pursuant to a remarketing arrangement, and (f) may be called from existing investors by a third party. The debentures will be issued under an indenture to be entered into between Energy East and a national bank, as trustee.

Energy East contemplates that the debentures would be issued and sold directly to one or more purchasers in privately-negotiated transactions or to one or more investment banking or underwriting firms or other entities which would resell the debentures either without registration under the 1933 Act in reliance upon one or more applicable exemptions from registration or to the public either (a) through underwriters selected by negotiation or competitive bidding or (b) through selling agents acting either as agent or as principal for resale to the public either directly or through dealers.

The maturity dates, interest rates, redemption and sinking fund provisions and conversion features, if any, with respect to the debentures of a particular series, as well as any associated placement, underwriting or selling agent fees, commissions and discounts, if any, will be established by negotiation or competitive bidding and reflected in a purchase agreement or underwriting agreement setting forth the terms; provided, however, that debentures issued by Energy East shall be subject to the financing parameters set forth below.

5. Short-Term Debt

Energy East proposes to issue and sell from time to time, directly or indirectly through one or more financing subsidiaries, unsecured short-term debt, in the form of commercial paper, notes issued to banks and other institutional

[7] Any convertible or equity-linked securities would be convertible into or linked only to common stock, preferred securities or unsecured debt securities that Energy East is otherwise authorized to issue directly or indirectly through a financing entity on behalf of Energy East.

[8] Any convertible debt issued by Energy East would be convertible only into common stock, preferred securities or unsecured debt securities that Energy East is otherwise authorized to issue directly or indirectly through a financing entity on behalf of Energy East.

lenders, and other forms of short-term indebtedness, in an aggregate principal amount at any time outstanding during the Authorization Period not to exceed the Energy East Short-term Limit. Unused borrowing capacity under a credit facility would not count towards the Energy East Short-term Limit. Short-term borrowings under credit lines will have maturities of a year or less from the date of each borrowing.

Commercial paper issued under any commercial paper facility would be sold, directly or indirectly through one or more financing subsidiaries, in established U.S. or European commercial paper markets. Commercial paper would typically be sold to dealers at the discount rate per annum prevailing at the date of issuance for commercial paper of comparable quality and maturities sold to commercial paper dealers generally. It is expected that the dealers acquiring commercial paper would re-offer it at a discount to corporate, institutional and, with respect to European commercial paper, individual investors. It is anticipated that the commercial paper would be reoffered to investors such as commercial banks, insurance companies, pension funds, investment trusts, foundations, colleges and universities, finance companies and non-financial corporations.

Energy East also may establish bank lines in an aggregate principal amount not to exceed the aforementioned Energy East Short-term Limit. While the agreements may be for periods of three to five years or more, loans under these bank credit lines are expected to have maturities not more than one year from the date of each borrowing. Energy East may engage in other types of short-term debt financing generally available to borrowers with comparable credit ratings as it may deem appropriate in light of its needs and market conditions at the time of issuance.

6. Utility Subsidiary Financing

Applicants state that the issue and sale of most securities by the Utility Subsidiaries will be exempt from the pre-approval requirements of sections 6(a) and 7 of the Act pursuant to rule 52(a), as most securities offerings by a Utility Subsidiary must be approved by the state utility commission with jurisdiction over the utility. However, certain financings by the Utility Subsidiaries for which authorization is requested in the Application may be outside the scope of the rule 52 exemption because they will not be subject to state commission approval.

Accordingly, the Utility Subsidiaries request authorization to issue and sell from time to time during the Authorization Period, directly or indirectly through one or more financing subsidiaries, short-term debt, in the form of commercial paper, notes issued to banks and other institutional lenders, and other forms of short-term indebtedness [9] to the extent they are not otherwise exempt pursuant to rule 52(a), with maturities of one year or less, up to the following aggregate principal amounts:

Utility subsidiaries	Aggregate principal amount
NYSEG	$275,000,000
Maine Natural Gas	50,000,000
Central Maine	150,000,000
MEPCo	30,000,000
NORVARCO	30,000,000
Southern Connecticut Gas	125,000,000
Connecticut Natural Gas	125,000,000
Berkshire Gas	50,000,000
RG&E	200,000,000

7. Short-Term Debt of Intermediate Holding Companies

Two of the Intermediate Holding Companies, Connecticut Energy and Berkshire Energy, historically have had short-term debt outstanding under bank credit facilities, although Applicants state that no debt securities issued to non-system companies are currently outstanding. Connecticut Energy and Berkshire Energy request authority to issue, sell and have outstanding at any one time during the Authorization Period unsecured short-term debt to Energy East or to third party lenders under credit facilities in amounts at any one time outstanding not to exceed $25 million and $10 million, respectively.

In addition, RGS requests authority to issue, sell and have outstanding at any one time during the Authorization Period unsecured short-term debt securities with maturities of one year or less in the aggregate principal amount of $100 million. Subject to those limitations and pursuant to the terms and conditions set forth in the application, RGS may engage in short-term financing as it may deem appropriate in light of its needs and market conditions at the time of issuance. The short-term financing could include, without limitation, commercial paper sold in established commercial paper markets in a manner similar to Energy East, bank lines, debt securities issued under indentures, or note programs. In addition, RGS will not issue any indebtedness in contravention of any pre-existing orders of any state utility commission.

The Intermediate Holding Companies also request authorization to issue and sell their securities to Energy East and to acquire the securities of their direct or indirect subsidiaries for the purpose of financing the current or future authorized or permitted businesses of the subsidiaries.

8. Non-Utility Subsidiary Financing

Energy East, through its Non-utility Subsidiaries, is engaged in and expects to continue to engage in energy-related, telecommunications or otherwise functionally related, non-utility businesses, which include, principally, fuel transportation and storage, energy marketing, energy management and demand side services, district heating and cooling, and investments in exempt wholesale generators as defined in section 32 of the Act (''EWGs''), exempt telecommunications companies (''ETCs'') and ''qualifying facilities'' (''QFs'') within the meaning of the Public Utility Regulatory Policies Act of 1978, as amended (''PURPA''). To finance investments in these competitive businesses, it will be necessary for the Non-utility Subsidiaries to have the ability to engage in financing transactions which are commonly accepted for these types of investments. Applicants believe that, in almost all cases, the financings will be exempt from prior Commission authorization pursuant to rule 52(b).

To be exempt under rule 52(b), any loans by Energy East to a Non-utility Subsidiary or by one Non-utility Subsidiary to another must have interest rates and maturities that are designed to parallel the lending company's effective cost of capital. However, in the limited circumstances where the borrowing Non-utility Subsidiary is not wholly-owned by Energy East directly or indirectly, Applicants request authority for Energy East or a Non-utility Subsidiary, as the case may be, to make loans to the subsidiaries at interest rates and maturities designed to provide a return to the lending company of not less than its effective cost of capital. If the loans are made to a Non-utility Subsidiary, the company will not sell any services to any associate Non-utility Subsidiary unless the associated purchaser falls within one of the categories of companies to which goods and services may be sold on a basis other than ''at cost.''

[9] For example, Central Maine's borrowings are secured by an unperfected lien on receivables. The Utility Subsidiaries request the flexibility to issue short-term debt secured by their accounts receivable.

9. Guaranties

a. Energy East Guaranties

Energy East requests authorization to enter into guaranties, obtain letters of credit, enter into expense agreements or otherwise provide credit support to or on behalf of Subsidiaries (collectively, ''Energy East Guaranties'') as may be appropriate to enable the Subsidiaries to operate in the ordinary course of business, in an aggregate principal amount not to exceed $1 billion issued and outstanding at any one time during the Authorization Period, provided however, that the amount of any Energy East Guaranties in respect of obligations of any EWG, foreign utility company as defined in section 33 of the Act (''FUCO''), or a company engaged or formed to engage in activities permitted by rule 58 (''Rule 58 Subsidiary'') shall also be subject to the limitations of rule 53(a)(1) or rule 58(a)(1), as applicable. Energy East may charge each Subsidiary a fee for each guaranty provided on its behalf that is not greater than the cost, if any, of obtaining the liquidity necessary to perform the guaranty (for example, bank line commitment fees or letter of credit fees, plus other transactional expenses).

b. Non-Utility Subsidiary Guaranties

In addition to the guaranties that may be provided by Energy East, as described above, the Non-utility Subsidiaries [10] request authorization to enter into guaranties, obtain letters of credit, enter into expense agreements or otherwise provide credit support to or on behalf of other Non-utility Subsidiaries (collectively, ''Non-utility Subsidiary Guaranties'') in an aggregate principal amount not to exceed $750 million issued and outstanding at any one time during the Authorization Period, exclusive of any guaranties and other forms of credit support that are exempt pursuant to rule 45(b) and rule 52, provided that the amount of any Non-utility Subsidiary Guaranties in respect of obligations of any Rule 58 Subsidiary shall also be subject to the limitations of rule 58(a)(1). The Non-utility Subsidiary providing this credit support proposes to charge each Subsidiary a fee for each guarantee provided on its behalf that is not greater than the cost, if any, of obtaining the liquidity necessary to perform the guaranty.

c. Intermediate Holding Company Guaranties

CTG Resources, an Intermediate Holding Company, has provided guaranties and other forms of credit support on behalf of its subsidiaries. Specifically, CTG Resources has guaranteed $40 million of promissory notes issued by a non-utility subsidiary, TEN Companies, that will mature in 2009 ($25 million) and 2010 ($15 million). CTG Resources has also provided guaranties totaling approximately $40.7 million for other financial and contractual obligations of TEN Companies. These include letters of credit totaling $25.7 million backing development authority bonds and other similar contractual obligations of TEN Companies that expire at various times not later than 2025. CTG Resources requests authorization to maintain and replace as necessary these guaranties and other forms of credit support (''CTG Resources Guaranties'') during the Authorization Period and thereafter for so long as the underlying obligations of any subsidiary shall remain outstanding in an aggregate amount not to exceed $100 million.

In addition, RGS requests authorization to enter into guaranties, obtain letters of credit, enter into expense agreements or otherwise provide credit support to or on behalf of its subsidiary companies (''RGS Guaranties'') as may be appropriate to enable the companies to operate in the ordinary course of business, in an aggregate principal amount not to exceed $100 million at any one time outstanding during the Authorization Period.

The amount of CTG Resources Guaranties and RGS Guaranties would not count against the limit applied to Non-utility Subsidiary Guaranties. The amount of any guaranties in respect of obligations of any Rule 58 subsidiary shall also be subject to the limitations of rule 58(a)(1). Each guarantor may charge its subsidiaries a fee for each guaranty or other form of credit support provided on its behalf that is not greater than the cost, if any, of obtaining the liquidity necessary to perform under the obligation (for example, bank line commitment fees or letter of credit fees, plus other transactional expenses).

10. Hedging Transactions

Energy East proposes to enter into, perform, purchase and sell financial instruments intended to manage the volatility of currencies and interest rates, including but not limited to currency and interest rate swaps, caps, floors, collars and forward agreements or any other similar agreements (''Hedging Instruments''). Energy East would employ Hedging Instruments as a means of prudently managing the risk associated with any of its outstanding or anticipated debt by, for example, synthetically (a) converting variable rate debt to fixed rate debt, (b) converting fixed rate debt to variable rate debt, (c) limiting the impact of changes in interest rates resulting from variable rate debt, and (d) providing an option to enter into interest rate swap transactions in future periods for planned issuances of debt securities.

Energy East proposes to enter into Hedging Instruments with respect to anticipated debt offerings (''Anticipatory Hedges'') in order to fix and/or limit the interest rate or currency exchange rate risk associated with any new issuance. In addition to the use of Hedging Instruments, Anticipatory Hedges may include (a) a forward sale of exchange-traded government securities [11] futures contracts, government securities and/or a forward swap (each a ''Forward Sale''), (b) the purchase of put options on government securities (''Put Options Purchase''), (c) a Put Options Purchase in combination with the sale of call options on government securities (''Zero Cost Collar''), (d) transactions involving the purchase or sale, including short sales, of government securities, or (e) some combination of a Forward Sale, Put Options Purchase, Zero Cost Collar and/or other derivative or cash transactions, including, but not limited to structured notes, caps and collars, appropriate for the Anticipatory Hedges. Energy East may seek to hedge its exposure to currency fluctuations through currency swaps or options and forward exchange or similar transactions.

Hedging Instruments and instruments used to affect Anticipatory Hedges will be executed on-exchange (''On-Exchange Trades'') with brokers through the opening of futures and/or options positions, the opening of over-the-counter positions with one or more counterparties (''Off-Exchange Trades''), or a combination of On-Exchange Trades and Off-Exchange Trades. Energy East will determine the optimal structure of each transaction at the time of execution. Off-Exchange Trades would be entered into only with Intermediate Companies or with counterparties whose senior debt ratings are investment grade as determined by S&P, Moody's or Fitch (''Approved Counterparties'').

The Utility Subsidiaries, to the extent the securities are not exempt under rule 52(a), also propose to enter into Hedging Instruments with third-party Approved

[10] Excluding CTG Resources and RGS.

[11] Government Securities would include U.S. Treasury obligations or the appropriate government benchmark security for the currency involved in the hedge.

Counterparties, but not other Energy East System companies, on the same terms generally applicable to Energy East. The Utility Subsidiaries expect to use the authority principally to hedge external debt. Energy East maintains a central treasury department whose activities are governed by policies and guidelines approved by the Board of Directors, with regular reviews and monitoring by a standing committee of the Board. The treasury department operates as a service center rather than as a profit center and is subject to internal and external audit. Treasury activities are managed in a non-speculative manner and all transactions in Hedging Instruments would be matched to an underlying business purpose. Consequently, Energy East and the Utility Subsidiaries would not enter into transactions in Hedging Instruments for speculative purposes or to finance businesses that are not permitted, authorized or exempt under the Act. Energy East will qualify transactions in Hedging Instruments for hedge-accounting treatment under generally accepted accounting principles in the U.S. No gain or loss on a Hedging Instrument entered into by Energy East or associated tax effects, will be allocated to the Utility Subsidiaries, regardless of the accounting treatment accorded to the transaction. Consequently, the Utility Subsidiaries would not be adversely affected by these transactions.[12]

11. Changes in Capital Stock of Subsidiaries

Applicants state that the portion of an individual Subsidiary's aggregate financing to be effected through the sale of stock to Energy East or other intermediate parent company during the Authorization Period pursuant to rule 52 and/or pursuant to an order issued in regard to the Application cannot be ascertained at this time. It may happen that the proposed sale of capital securities may in some cases exceed the then authorized capital stock of the Subsidiary. In addition, the Subsidiary may choose to use capital stock with no par value. Also, a wholly-owned Subsidiary may wish to engage in a reverse stock split to reduce franchise taxes. As needed to accommodate the proposed transactions and to provide for future issues, Applicants request authority to change any wholly-owned Subsidiary's authorized capital stock capitalization by an amount deemed appropriate by Energy East or other intermediate parent company. A Subsidiary would be able to change the par value, or change between par value and no-par stock, without additional Commission approval. Any action by a Utility Subsidiary would be subject to and would only be taken upon the receipt of any necessary approvals by the state commission in the state or states where the Utility Subsidiary is incorporated and doing business.

12. Financing Subsidiaries

Energy East and the Subsidiaries (other than Intermediate Holding Companies) request authority to acquire, directly or indirectly, the equity securities of one or more corporations, trusts, partnerships or other entities (''Financing Subsidiaries'') created specifically for the purpose of facilitating the financing of the authorized and exempt activities (including exempt and authorized acquisitions) of companies through the issuance of long-term debt or equity securities, including but not limited to monthly income preferred securities, to third parties. Any Financing Subsidiary may loan, dividend or otherwise transfer the proceeds of the financings to its parent or to other Subsidiaries, provided, however, that a Financing Subsidiary of a Utility Subsidiary will dividend, loan or transfer proceeds of financing only to the Utility Subsidiary. Energy East may, if required, guaranty or enter into expense agreements in respect of the obligations of any Financing Subsidiary that it organizes. The Subsidiaries may also provide guaranties and enter into expense agreements, if required, on behalf of any Financing Subsidiaries which they organize pursuant to rules 45(b)(7) and 52, as applicable. The amount of securities issued by a Financing Subsidiary would count against the limitation applicable to its parent for the securities, as if the parent company had issued the securities directly. In that case, however, the guaranty by the parent of the security issued by its Financing Subsidiary would not be counted against the limitations on Energy East Guaranties, CTG Resources or RGS Guaranties, or Non-utility Subsidiary Guaranties, as the case may be.

13. Intermediate Subsidiaries

Energy East requests authorization to acquire, directly or indirectly, the securities of one or more Intermediate Subsidiaries, which would be organized exclusively for the purpose of acquiring, holding and/or financing the acquisition of the securities of or other interest in one or more EWG, FUCO, Rule 58 Subsidiary, ETC or other Non-utility Subsidiary (as authorized by the Commission or permitted under the Act), provided that Intermediate Subsidiaries may also engage in development activities (''Development Activities'') and administrative activities (''Administrative Activities''), as described below, relating to the subsidiaries. To the extent the transactions are not exempt from the Act or otherwise authorized or permitted by rule, regulation or order of the Commission, Energy East requests authority for Intermediate Subsidiaries to provide management, administrative, project development and operating services to the entities. The services may be rendered at fair market prices to the extent they qualify for any of the exceptions from the ''at cost'' standard requested below.

Development Activities will be limited to due diligence and design review; market studies; preliminary engineering; site inspection; preparation of bid proposals, including, in connection therewith, posting of bid bonds; application for required permits and/or regulatory approvals; acquisition of site options and options on other necessary rights; negotiation and execution of contractual commitments with owners of existing facilities, equipment vendors, construction firms, power purchasers, thermal ''hosts,'' fuel suppliers and other project contractors; negotiation of financing commitments with lenders and other third-party investors; and other preliminary activities as may be required in connection with the purchase, acquisition, financing or construction of facilities or the acquisition of securities of or interests in new businesses. Intermediate Subsidiaries request authority to expend up to $100 million during the Authorization Period on all Development Activities.

Administrative Activities will include ongoing personnel, accounting, engineering, legal, financial, and other support activities necessary to manage Energy East's investments in Non-utility Subsidiaries.

Applicants state that there are several legal and business reasons for the use of special-purpose intermediate companies in connection with making investments in EWGs and FUCOs, Rule 58 Subsidiaries, ETCs and other Non-utility Subsidiaries. For example, the formation and acquisition of special-purpose subsidiaries is often necessary

[12] The terms applicable to Hedging Instruments entered into by the Utility Subsidiaries differ from those applicable to Energy East because to the extent a Utility Subsidiary incurs a gain or loss on a Hedging Instrument that it has entered into to hedge a currency or interest rate risk associated with a security that the Utility Subsidiary has issued, the gain or loss would be attributed to the Utility Subsidiary.

or desirable to facilitate financing the acquisition and ownership of a FUCO, an EWG or another non-utility enterprise. Furthermore, the laws of some foreign countries may require that the bidder in a privatization program be organized in that country. In such cases, it may be necessary to form a foreign subsidiary as the entity (or participant in the entity) that submits the bid or other proposal.

An Intermediate Subsidiary may be organized, among other things, (a) to facilitate the making of bids or proposals to develop or acquire an interest in any EWG or FUCO, Rule 58 Subsidiary, ETC or other Non-utility Subsidiary; (b) after the award of a bid proposal, in order to facilitate closing on the purchase or financing of the acquired company; (c) at any time subsequent to the consummation of an acquisition of an interest in any company in order, among other things, to effect an adjustment in the respective ownership interests in the business held by Energy East and non-affiliated investors; (d) to facilitate the sale of ownership interests in one or more acquired non-utility companies; (e) to comply with applicable laws of foreign jurisdictions limiting or otherwise relating to the ownership of domestic companies by foreign nationals; (f) as a part of tax planning in order to limit Energy East's exposure to state, U.S. and foreign taxes; (g) to further insulate Energy East and the Utility Subsidiaries from operational or other business risks that may be associated with investments in non-utility companies; or (h) for other lawful business purposes.

Investments in Intermediate Subsidiaries may take the form of any combination of the following: (a) Purchases of capital shares, partnership interests, member interests in limited liability companies, trust certificates or other forms of equity interests; (b) capital contributions; (c) open account advances with or without interest; (d) loans; and (e) guaranties issued, provided or arranged in respect of the securities or other obligations of any Intermediate Subsidiaries or new Subsidiaries. Funds for any direct or indirect investment in any Intermediate Subsidiaries or new Subsidiaries will be derived from (x) financings authorized in this proceeding; (y) any appropriate future debt or equity securities issuance authorization obtained by Energy East from the Commission; and (z) other available cash resources, including proceeds of securities sales by a Non-utility Subsidiary pursuant to rule 52. To the extent that Energy East provides funds or guaranties directly or indirectly to an Intermediate Subsidiary which are used for the purpose of making an investment in any EWG, FUCO or a Rule 58 Subsidiary, the amount of funds or guaranties will be included in Energy East's ''aggregate investment,'' as calculated in accordance with rule 53 or rule 58, as applicable.

Energy East may determine from time to time to consolidate or otherwise reorganize all or any part of its direct and indirect ownership interests in Non-utility Subsidiaries, and the activities and functions related to the investments, under a company, including one or more Intermediate Subsidiaries. To effect any consolidation or other reorganization, Energy East may wish to either contribute the equity securities of one Non-utility Subsidiary to another company or sell (or cause a Non-utility Subsidiary to sell) the equity securities of one Non-utility Subsidiary to another company. To the extent that these transactions are not otherwise exempt under the Act or its rules, Energy East is requesting authorization to consolidate or otherwise reorganize under one or more direct or indirect subsidiaries its ownership interests in existing and future Non-utility Subsidiaries. Transactions may take the form of a sale, contribution or transfer of the securities of a Non-utility Subsidiary as a dividend to a company and the acquisition by a company of securities either by purchase or by receipt of a dividend. The purchasing company in any transaction structured as an intra-system sale of equity securities may execute and deliver its promissory note evidencing all or a portion of the consideration given. Each transaction would be carried out in compliance with all applicable U.S. or foreign laws and accounting requirements, and any transaction structured as a sale would be carried out for a consideration equal to the book value of the equity securities being sold. Energy East will report each transaction in the next quarterly certificate filed pursuant to rule 24 in this proceeding, as described below.

14. Investments in Energy-Related Assets

Non-utility Subsidiaries request authority to acquire or construct in one or more transactions from time to time during the Authorization Period, non-utility energy assets in the United States, including, without limitation, natural gas production, gathering, processing, storage and transportation facilities and equipment, liquid oil reserves and storage facilities, and associated facilities (collectively, ''Energy-Related Assets''), that would be incidental to the energy marketing, brokering and trading operations of Energy East's Subsidiaries. Non-utility Subsidiaries request authorization to invest up to $500 million (''Investment Limitation'') during the Authorization Period in Energy-Related Assets or in the equity securities of existing or new companies substantially all of whose physical properties consist or will consist of Energy-Related Assets. Energy-Related Assets (or equity securities of companies owning Energy-Related Assets) may be acquired for cash or in exchange for Common Stock or other securities of Energy East or a Non-utility Subsidiary of Energy East, or any combination of the foregoing. If Common Stock of Energy East is used as consideration in connection with any acquisition, the market value on the date of issuance will be counted against the requested Investment Limitation. The stated amount or principal amount of any other securities issued as consideration in any transaction will also be counted against the Investment Limitation. Under no circumstances will any Non-utility Subsidiary acquire, directly or indirectly, any assets or properties the ownership or operation of which would cause the company to be considered an ''electric utility company'' or ''gas utility company'' as defined under the Act. Energy East may add to the existing base of non-utility, marketing-related assets held by its subsidiaries as and when market conditions warrant, whether through acquisitions of specific assets or groups of assets that are offered for sale, or by acquiring existing companies (for example, other gas marketing companies which own significant physical assets in the areas of gas production, processing, storage, and transportation).

15. Sales of Services and Goods Among Non-Utility Subsidiaries

Energy East's Non-utility Subsidiaries request authorization to provide services and sell goods to each other at fair market prices determined without regard to cost, and request an exemption (to the extent that rule 90(d) does not apply) pursuant to section 13(b) from the cost standards of rules 90 and 91 applicable to the transactions, in any case in which the Non-utility Subsidiary purchasing the goods or services is:

- A FUCO or foreign EWG which derives no part of its income, directly or indirectly, from the generation, transmission, or distribution of electric energy for sale within the United States;
- An EWG which sells electricity at market-based rates which have been approved by the Federal Energy Regulatory Commission (''FERC''),

provided that the purchaser is not one of the Utility Subsidiaries;

• A QF that sells electricity exclusively (a) at rates negotiated at arms'-length to one or more industrial or commercial customers purchasing electricity for their own use and not for resale, and/or (b) to an electric utility company (other than a Utility Subsidiary) at the purchaser's ≥avoided cost≥ as determined in accordance with the regulations under PURPA;

• A domestic EWG or QF that sells electricity at rates based upon its cost of service, as approved by FERC or any state public utility commission having jurisdiction, provided that the purchaser thereof is not one of the Utility Subsidiaries; or

• A Rule 58 Subsidiary or any other Non-utility Subsidiary that (a) is partially-owned by Energy East, provided that the ultimate purchaser of the goods or services is not a Utility Subsidiary service company (or any other entity that Energy East may form whose activities and operations are primarily related to the provision of goods and services to the Utility Subsidiaries), (b) is engaged solely in the business of developing, owning, operating and/or providing the services or goods to Non-utility Subsidiaries described above, or (c) does not derive, directly or indirectly, any material part of its income from sources within the United States and is not a public-utility company operating within the United States.

16. Activities of Rule 58 Subsidiaries Within and Outside the United States

Energy East, on behalf of any current or future Rule 58 Subsidiaries, requests authority to engage in business activities permitted by rule 58 both within and outside the United States, including:

• The brokering and marketing of electricity, natural gas and other energy commodities (''Energy Marketing'');

• Energy management services (''Energy Management Services''), including the marketing, sale, installation, operation and maintenance of various products and services related to energy management and demand-side management, including energy and efficiency audits; facility design and process control and enhancements; construction, installation, testing, sales and maintenance of (and training client personnel to operate) energy conservation equipment; design, implementation, monitoring and evaluation of energy conservation programs; development and review of architectural, structural and engineering drawings for energy efficiencies, design and specification of energy consuming equipment; and general advice on programs; the design, construction, installation, testing, sales and maintenance of new and retrofit heating, ventilating, and air conditioning, electrical and power systems, alarm and warning systems, motors, pumps, lighting, water, water-purification and plumbing systems, and related structures, in connection with energy-related needs; and the provision of services and products designed to prevent, control, or mitigate adverse effects of power disturbances on a customer's electrical systems; and

• Engineering, consulting and other technical support services (''Consulting Services'') with respect to energy-related businesses, as well as for individuals. Consulting Services would include technology assessments, power factor correction and harmonics mitigation analysis, meter reading and repair, rate schedule design and analysis, environmental services, engineering services, billing services (including consolidation billing and bill disaggregation tools), risk management services, communications systems, information systems/data processing, system planning, strategic planning, finance, feasibility studies, and other similar services.

Applicants state that these investments would count against the rule 58 limit.

In regard to: (a) Energy Marketing activities outside the United States and Canada, (b) the provision of Energy Management Services and Consulting Services anywhere outside the United States, and (c) other activities of Rule 58 Subsidiaries outside the United States, Energy East requests that the Commission continue to reserve jurisdiction over these activities pending completion of the record.

B. Payment of Dividends

1. Payment of Dividends by Energy East, the Intermediate Holding Companies and the Utility Subsidiaries

Energy East, the Intermediate Holding Companies (other than Energy East Enterprises), and Central Maine, Southern Connecticut Gas, Connecticut Natural Gas and Berkshire Gas propose during the Authorization Period: (a) To pay dividends out of capital and unearned surplus in an amount equal to retained earnings prior to their respective mergers with Energy East, and (b) to pay dividends out of earnings before any amortization of intangibles recognized as a result of their respective mergers, and any impairment of either goodwill or other intangibles recognized as a result of the merger.[13]

Applicants state that the requested dividend relief is an important tool for managing capital structures and it helps to prevent excessive equity levels. Applicants cite the example of a state commission deciding to reduce a Utility Subsidiary's amount of equity that will earn an equity return. In that case, it would be contrary to the interests of investors to maintain a higher level of equity and appropriate to reduce equity levels through dividends to the level on which earnings may accrue. In another example, a company's sale of assets may give rise to surplus capital and the need to pay dividends out of capital to re-balance the capital structure of the company. Finally, Applicant's note that periodic goodwill impairment tests may result in a goodwill impairment charge that would reduce retained earnings. This type of non-cash charge does not affect operating cash flows and Applicants state that it still may be appropriate to pay a dividend out of capital.

Applicants state that because the Utility Subsidiaries would not pay dividends out of capital if the payments would reduce equity levels below 30%, or any higher levels required by state utility commission regulation, that the requested dividend authority is not adverse to the interests of investors or consumers. In addition, Energy East, the Intermediate Holding Companies and the Utility Subsidiaries represent that they will not declare or pay any dividend out of capital or unearned surplus in contravention of any law restricting the payment of dividends. In this regard, Applicants note that all U.S. jurisdictions limit to some extent the authority of corporations to make dividend distributions to shareholders. Most state corporation statutes contain either or both an equity insolvency test or some type of balance sheet test. Energy East, the Intermediate Holding Companies and the Utility Subsidiaries also will comply with the terms of any credit agreements and indentures that restrict the amount and timing of distributions to shareholders.

2. Payment of Dividends by Certain Non-Utility Subsidiaries

Energy East requests authorization, on behalf of its current and future Non-

[13] Applicants are asking for an extension of the authority that the Commission has previously granted them. *See* HCAR No. 35–27228 (September 12, 2000) and HCAR No. 35–27643 (January 28, 2003). Applicants state that, although not a frequent occurrence, companies in the Energy East group have found it appropriate to pay dividends out of capital from time to time since the receipt of this authority.

utility Subsidiaries, permitting the companies to pay dividends or to redeem securities (collectively, a ''Dividend''), from time to time through the Authorization Period, out of capital and unearned surplus.

Energy East anticipates that there may be situations in which one or more Non-utility Subsidiaries will have unrestricted cash available for distribution in excess of the company's current and retained earnings. In that situation, the declaration and payment of a Dividend would have to be charged, in whole or in part, to capital or unearned surplus. As an example, if an Intermediate Subsidiary of Energy East were to purchase all of the stock of an EWG or FUCO and, following the acquisition, the EWG or FUCO incurs non-recourse borrowings, some or all of the proceeds of which are distributed to the Intermediate Subsidiary as a reduction in the amount invested in the EWG or FUCO (i.e., return of capital), the Intermediate Subsidiary (assuming it has no earnings) could not, without the Commission's approval, in turn distribute the cash to Energy East or its immediate parent.[14]

Similarly, Applicants state that using the same example, if an Intermediate Subsidiary, following its acquisition of all of the stock of an EWG or FUCO, were to sell part of that stock to a third party for cash, the Intermediate Subsidiary would again have substantial unrestricted cash available for distribution, but (assuming no profit on the sale of the stock) would not have current earnings and therefore could not, without the Commission's approval, declare and pay a Dividend to its parent out of the cash proceeds.

Further, Applicants state that there may be periods during which unrestricted cash available for distribution by a Non-utility Subsidiary exceeds current and retained earnings due to the difference between accelerated depreciation allowed for tax purposes, which may generate significant amounts of distributable cash, and depreciation methods required to be used in determining book income.

Finally, Applicants state that even under circumstances in which a Non-utility Subsidiary has sufficient earnings, and therefore may declare and pay a Dividend to its immediate parent, the immediate parent may have negative retained earnings, even after receipt of the Dividend, due to losses from other operations. In this instance, cash would be trapped at a subsidiary level where there is no current need for it.

Energy East, on behalf of its Non-utility Subsidiaries, represents that these companies will not declare or pay any Dividend out of capital and unearned surplus, except as permitted under the corporate law and state or national law applicable in the jurisdiction where each company is organized and the terms of any credit agreements and indentures that restrict the amount and timing of distributions to shareholders. In addition, none of the companies will declare or pay any Dividend out of capital or unearned surplus unless it: (a) Has received excess cash as a result of the sale of some or all of its assets; (b) has engaged in a restructuring or reorganization; and/or (c) is returning capital to an associate company.

III. Financing Parameters

A. General Terms and Conditions of Financing

Applicants request authorization to engage in financing transactions during the Authorization Period for which the specific terms and conditions are not at this time known, and which may not be exempt under rule 52, without further prior approval by the Commission. The following general terms will be applicable to the proposed external financing activities (including, without limitation, securities issued for the purpose of refinancing or refunding outstanding securities of the issuer):

1. Effective Cost of Capital

The effective cost of capital for long-term debt, preferred stock, preferred securities, and equity-linked securities issued by Energy East, the Utility Subsidiaries and the Non-utility Subsidiaries will not exceed competitive market rates available at the time of issuance for securities having the same or reasonably similar terms and conditions issued by similar companies of reasonably comparable credit quality; provided that in no event will the effective cost of capital on (a) any long-term debt securities exceed at the time of issuance 500 basis points over comparable term U.S. Treasury securities or other government benchmark for the currency concerned (''Treasury Securities''); or (b) any short-term debt securities exceed at the time of issuance 300 basis points over the London Interbank Offered Rate. The dividend and distribution rate on any series of preferred stock, preferred securities or equity-linked securities will not exceed at the time of issuance 700 basis points over Treasury Securities. Applicants request that the Commission reserve jurisdiction over issuances of long-term debt, short-term debt, preferred stock, preferred securities and equity-linked securities by Energy East, the Utility Subsidiaries and the Non-utility Subsidiaries, other than transactions exempt under the Act or any rule thereunder, where the cost of capital is in excess of the limits stated above but is not more than competitive market rates available at the time of issuance for securities having the same or reasonably similar terms and conditions issued by similar companies of reasonably comparable credit quality, until the record is complete with regard to such issuances.

2. Maturity

The maturity of long-term debt will be more than one year but not longer than 50 years after the issuance thereof. Preferred securities and equity-linked securities will be redeemed no later than 50 years after the issuance thereof, unless converted into common stock; however, preferred stock issued directly by Energy East may be perpetual in duration. Short-term debt will have a maturity of up to one year.

3. Commissions

The underwriting fees, commissions or other similar remuneration paid in connection with the non-competitive issue, sale or distribution of securities pursuant to the Application (not including any original issue discount) will not exceed 5% of the principal or total amount of the securities being issued.

4. Common Equity

Energy East will maintain common stock equity[15] as a percentage of total consolidated capitalization,[16] as shown in its most recent quarterly balance sheet of at least 30%.[17] Each Utility Subsidiary and Intermediate Holding Company on an individual basis (except

[14] The same problem would arise where an Intermediate Subsidiary is over-capitalized in anticipation of a bid which is ultimately unsuccessful. In such a case, Energy East would normally desire a return of some or all of the funds invested.

[15] Common stock equity includes common stock (i.e., amounts received equal to the par or stated value of the common stock), additional paid-in capital, retained earnings and minority interests.

[16] Applicant will calculate the common stock equity to total capitalization ratio as follows: Common stock equity/common stock equity + preferred stock + gross debt. Gross debt is the sum of the long-term debt, short-term debt and current maturities.

[17] Energy East will be able to issue common stock (including pursuant to stock-based plans maintained for shareholders, employees and management) to the extent authorized in a Commission order issued pursuant to the Application.

NORVARCO),[18] will maintain common stock equity of at least 30% of total capitalization as shown in each company's most recent quarterly balance sheet.

5. Investment Grade Criteria

Applicants represent that with respect to the securities issuance authority proposed in this application: (a) Within four days after the occurrence of a Ratings Event,[19] Applicants will notify the Commission of its occurrence (by means of a letter, via fax, email or overnight mail to the Office of Public Utility Regulation); and (b) within 30 days after the occurrence of a Ratings Event, Applicants will submit a post-effective amendment to the Application explaining the material facts and circumstances relating to that Ratings Event (including the basis on which, taking into account the interests of investors, consumers and the public as well as other applicable criteria under the Act, it remains appropriate for Applicant(s) to issue the securities for which authorization has been requested in this Application, so long as Applicant(s) continue to comply with the other applicable terms and conditions specified in the Commission's order authorizing the transactions requested in the Application). Furthermore, no securities authorized as a result of this Application other than common stock or short-term debt to fund the Utility Subsidiaries, will be issued following the 60th day after a Ratings Event if the downgraded rating(s) has or have not been upgraded to investment grade. Applicants request that the Commission reserve jurisdiction over the issuance of any securities (other than common stock or short-term debt to fund the Utility Subsidiaries) that Applicants are prohibited from issuing following the 60th day after a Ratings Event until the record is complete with regard to the issuance.

No security will be issued pursuant to the authorization sought herein after the last day of the Authorization Period, provided that securities issuable or deliverable upon exercise or conversion of, or in exchange for, securities which were issued during the Authorization Period, may be issued or delivered subsequent to the end of the Authorization Period.

B. Use of Proceeds

The financing proceeds will be used for general corporate purposes, including: (a) Financing investments by and capital expenditures of Energy East and its Subsidiaries, including, the funding of future investments in EWGs, FUCOs, Rule 58 Subsidiaries, and ETCs, (b) the repayment, redemption, refunding or purchase by Energy East or any Subsidiary of any of its own securities; and (c) financing working capital requirements of Energy East and its Subsidiaries. Energy East represents that no financing proceeds will be used to acquire the securities of, or other interests in, any company unless the acquisition has been approved by the Commission in this proceeding or in a separate proceeding or in accordance with an available exemption under the Act or its rules, including sections 32 and 33 and rule 58.

Energy East states that the aggregate amount of the proceeds of any financing and Energy East guaranties approved by the Commission in this proceeding that are used to fund investments in EWGs and FUCOs will not, when added to Energy East's ''aggregate investment'' (as defined in rule 53) in all such entities at any point in time, exceed 50% of Energy East's ''consolidated retained earnings'' (also as defined in rule 53). Furthermore, Energy East represents that the proceeds of any financing and Energy East Guaranties and Non-utility Subsidiary Guaranties utilized to fund investments in Rule 58 Subsidiaries will be subject to the limitations of that rule.

IV. Retention of Intermediate Holding Companies

Energy East requests that the Commission extend the authorization to maintain its Intermediate Holding Companies within the Energy East system on a permanent basis. Applicants state that section 11(b)(2) of the Act is intended to eliminate the pyramiding of holding company groups—the interposition of one or more holding companies between the uppermost holding company and the operating companies—and the issuance, at each level of the structure, of different classes of debt or stock with unequal voting rights. The only Intermediate Holding Company which itself has a subsidiary company which is a holding company is CMP Group. Therefore, Applicants assert that the provisions of section 11(b)(2) are not triggered by Energy East's ownership of CTG Resources, Berkshire Energy, Connecticut Energy and Energy East Enterprises.

Applicants state that although CMP Group does have a subsidiary which itself is a holding company the retention of CMP Group also does not implicate the abuses that section 11(b)(2) was designed to address. CMP Group is the parent of Central Maine, which is itself a public utility. As a public utility, Central Maine is regulated by the Maine Public Utilities Commission and the Federal Energy Regulatory Commission. Central Maine is a holding company with respect to two partially-owned special purpose subsidiaries: MEPCo, and, indirectly, Chester, a subsidiary of NORVARCO. These utility subsidiaries were organized to own specific transmission facilities in Maine jointly with unaffiliated public utilities. Central Maine and its utility subsidiaries were not established and are not currently maintained by Energy East a device to further the unfair distribution of voting control or an unnecessarily complicated capital structure. Given Central Maine's primary role as a public utility company Applicants assert that it is appropriate to view CMP Group in the same light as CTG Resources, Berkshire Energy, Connecticut Energy and Energy East Enterprises.[20] These companies do not serve as a means to diffuse control, but rather are being maintained for the purpose of helping Energy East capture economic efficiencies that might otherwise be lost. For example, the continued existence of each company will contribute to shareholder value by allowing efficiencies to be captured and to the effective local regulation of the operating utility subsidiaries by preserving local name recognition, operations and supervision. It also provides maximum separation of utility and non-utility ventures, insulating each utility from any potential economic impact associated with Energy East's other businesses. Further, the costs associated with maintaining these companies continue to be minimal.

The Intermediate Holding Companies do not have operational functions and simply serve as conduits between Energy East and Energy East's public utility subsidiaries with respect to financing and dividends. With the exception of short-term debt and

[18] NORVARCO owns a 50% interest in a partnership that owns a transmission line and is wholly capitalized with debt to minimize the cost of the transmission facility.

[19] ''Ratings Event'' will occur if, during the Authorization Period (a) any security issued by Applicants upon original issuance, is rated, is rated below investment grade; and (b) any outstanding security of Applicants that is rated is downgraded below investment grade. For purposes of this provision, a security will be deemed to be rated ''investment grade'' if it is rated investment grade by at least one nationally recognized statistical rating organization as that term is used in paragraphs (c)(2)(vi)(E), (F) and (H) of Rule 15c3–1 under the Security Exchange Act of 1934, as amended (''the Act'').

[20] Under 35–A M.R.S.A. § 708, Energy East would need the authorization of the Maine Public Utilities Commission to effect a restructuring that would result in the elimination of CMP Group.

guarantees on behalf of their subsidiaries, the Intermediate Holding Companies are not used for external financing purposes, to make acquisitions, or to perform service, sales or construction contracts.[21]

The continued existence of these holding companies also will help to preserve favorable tax attributes that would be lost if they were eliminated. In particular, the Intermediate Holding Companies provide flexibility with respect to the filing of state tax returns.[22]

For the Commission, by the Division of Investment Management, pursuant to delegated authority.

Margaret H. McFarland,

Deputy Secretary.

[FR Doc. E5–4404 Filed 8–12–05; 8:45 am]

BILLING CODE 8010–01–P

SECURITIES AND EXCHANGE COMMISSION

[Release No. 35–28011]

Filings Under the Public Utility Holding Company Act of 1935, as Amended (''Act'')

August 2, 2005.

Notice is hereby given that the following filing(s) has/have been made with the Commission pursuant to provisions of the Act and rules promulgated under the Act. All interested persons are referred to the application(s) and/or declaration(s) for complete statements of the proposed transaction(s) summarized below. The application(s) and/or declaration(s) and any amendment(s) is/are available for public inspection through the Commission's Branch of Public Reference.

Interested persons wishing to comment or request a hearing on the application(s) and/or declaration(s) should submit their views in writing by August 26, 2005, to the Secretary, Securities and Exchange Commission, 100 F Street, NE., Washington, DC 20549–9303 and serve a copy on the relevant applicant(s) and/or declarant(s) at the address(es) specified below. Proof of service (by affidavit or, in the case of an attorney at law, by certificate) should be filed with the request. Any request for hearing should identify specifically the issues of facts or law that are disputed. A person who so requests will be notified of any hearing, if ordered, and will receive a copy of any notice or order issued in the matter. After August 26, 2005, the application(s) and/or declaration(s), as filed or as amended, may be granted and/or permitted to become effective.

PNM Resources, Inc., et al. (70–10320)

PNM Resources, Inc., (''PNM Resources''), a registered holding company; Texas New Mexico Power Company, a Texas corporation and electric public utility company, (''TNMP''); and TNP Enterprises, Inc. a Texas corporation and wholly-owned holding company subsidiary of PNM Resources (''TNP Enterprises''), all of 4100 International Plaza, P.O. Box 2943, Fort Worth, Texas 76113, have filed a declaration, as amended (''Declaration'') under sections 6(a), 7, and 12(c), of the Act and rules 42 and 46, under the Act. PNM Resources, TNMP and TNP Enterprise are collectively referred to as ''Applicants.''

PNM Resources and its subsidiary TNP Enterprises are registered public utility holding companies. PNM Resources acquired TNP Enterprises on June 6, 2005, and as a result of the acquisition, TNP Enterprises has no employees or active operations, and serves as a financial conduit.

TNP Enterprises has two subsidiaries, TNMP and FCP Enterprises, Inc., a Delaware corporation formed as an intermediate subsidiary to hold businesses that qualify under Rule 58, including First Choice Power, L.P. and First Choice Power Special Purpose, L.P. (''First Choice'').[1] First Choice was organized to act as TNMP's affiliated retail electric provider in accordance with Texas Senate Bill 7, which established retail competition in the Texas electricity market. TNMP is a regulated utility operating in Texas and New Mexico.

Prior to January 1, 2002 when retail competition in the Texas electricity market was established, TNMP operated as an integrated electric utility in Texas, generating, transmitting and distributing electricity to customers in its Texas service territory. As required by Senate Bill 7, and in accordance with a plan approved by the Public Utility Commission of Texas (''PUCT''), TNMP separated its Texas utility operations into three components:

- *Retail Sales Activities.* As mentioned above, First Choice assumed the activities related to the sale of electricity to retail customers in Texas, and, on January 1, 2002, TNMP's customers became customers of First Choice, unless they chose a different retail electric provider.
- *Power Transmission and Distribution.* TNMP continues to operate its regulated transmission and distribution business in Texas.
- *Power Generation.* Texas Generating Company (''TGC'') became the unregulated entity performing TNMP's generation activities in Texas. However, in October 2002, TNMP and TGC sold TNP One (TGC's sole generating asset) to Sempra Energy Resources. As a result of the sale, TGC and TGC II neither own property nor engage in any operating activities, and neither TNMP nor any of its affiliates are currently in the power generation business.

TNMP initially sought recovery of $307.6 million of stranded costs pertaining to the generation assets rendered uneconomic by Texas restructuring from its customers, an amount which was later revised to $266.5 million. On July 22, 2004, the PUCT authorized TNMP to recover from its customers $87.3 million instead of the $266.5 million requested. The decision resulted in a loss of $155.2 million before an income tax benefit of $57.3 million ($97.8 million after tax). As a result, TNMP reported on August 9, 2004 a loss applicable to common stock of $97.0 million for the quarter ended June 30, 2004. TNMP recorded the $97.8 million after tax loss as an extraordinary item in accordance with the requirements of Statement of Financial Accounting Standards (''SFAS'') 101—Regulated Enterprises—accounting for the discontinuance of the application of FASB Statement No. 71. TNP Enterprises reported a net loss for calendar 2004 of $75,603,000 and negative shareholder equity of $29,680,000.

On the day of its acquisition by PNM Resources, TNP Enterprises refunded

---

[21] CMP Group does not issue securities to parties outside of the Energy East group to finance its subsidiaries.

[22] In addition to these structural and regulatory benefits, the continued existence of CTG Resources will also preserve the benefits associated with certain existing financing arrangements. Specifically, Ten Companies currently has approximately $40 million of private placement bonds outstanding that are supported by CTG Resources under the terms of a Forward Equity Purchase Agreement. The elimination of CTG Resources would constitute an event of default under the notes and the holders would have the right to ''put'' the bonds to the issuer at a large (approximately $5 million) make-whole premium.

[1] First Choice Power Special Purpose, L.P. is a bankruptcy remote special purpose entity certificated retail electric provider (''REP'') in Texas to which the original REP certificate of First Choice Power, Inc. and its price to beat customers were transferred pursuant to order of the Public Utility Commission of Texas. A new certificate was granted to First Choice Power, Inc., which is now First Choice Power, L.P., also a direct subsidiary of TNP Enterprises. These entities are collectively referred to as ''First Choice.'' First Choice does not derive material revenue from the public-utility company affiliates.

the balance of its outstanding term loans and issued irrevocable notices to redeem its outstanding high coupon senior subordinated notes and preferred stock effective July 6, 2005. Such securities were redeemed on that date. See HCAR No. 27979 (June 1, 2005).

The acquisition of TNP Enterprises will be accounted for using the ''purchase method'' under SFAS 141, Business Combinations, with associated intangible assets and goodwill recorded on the balance sheets in accordance with SFAS 142, Goodwill and Other Intangible Assets. Since PNM Resources has acquired all of the stock of TNP Enterprises, the ''push-down basis of accounting'' will be used.[2] Under this method, the cost of the acquisition will be allocated to the acquired company's assets and liabilities, which are recorded on the balance sheet at fair market value. Even though Commission accounting rules require PNM Resources to use push-down accounting and to value the acquisition at fair value, resulting in the recording of goodwill and intangible assets on TNMP's balance sheet, the goodwill and intangible assets will not be included in rate base or amortized as a component of cost of service in any state rate proceedings.

Currently, as a result of purchase accounting and the push-down of the amount paid in excess of book value for the TNP Enterprises system, the Shareholder Equity account of TNMP will be increased by $429 million, from $194 million to $623 million, and the retained earnings account of TNMP will be reset upwards to zero.

The manner in which PNM Resources acquired TNP Enterprises, and thereby TNMP, was designed to improve TNMP's credit ratings from BB+/Baa3 prior to the acquisition announcement to investment grade, BBB−/Baa3, and to maintain them at that level in order to provide consistent access to the capital markets at reasonable rates, which allows TNMP to fund necessary utility system improvements. Also, the acquisition was structured so as not to damage PNM Resources' credit ratings. Through the financial models provided to the rating agencies in advance of the acquisition of TNP Enterprises, both major agencies were aware of the plan to dividend and distribute cash from TNMP and First Choice to PNM Resources following the acquisition of TNP Enterprises.

The acquisition of TNP Enterprises has, in fact, improved the credit ratings of TNP Enterprises and its subsidiaries, including TNMP. All rating agencies referenced in their reports the stronger credit profile of PNM Resources, as well as the TNP Enterprises debt reduction resulting from the acquisition. Standard & Poor's raised the rating of TNMP following the acquisition to BBB from BB+. In addition, Moody's increased its credit rating to Baa3, as Applicants anticipated.[3]

A. Requested Authorizations

Applicants request four related authorizations in this filing. First, TNMP requests authorization through December 31, 2005 to redeem $62 million of its common stock held by TNP Enterprises, its parent. Second, PNM Resources and TNP Enterprises seek authority for their nonutility subsidiaries to distribute surplus, retire or redeem securities or pay dividends from capital through December 31, 2007. Third, TNP Enterprises requests authority to pay dividends (or to redeem capital stock) so as to distribute the proceeds received from its subsidiaries to PNM Resources pursuant to this filing. Applicants state that the need for the requested authorizations results from (i) the extraordinary effect of Texas restructuring on the book value of generation and the disallowance of stranded cost recovery; (ii) the application of push-down accounting for the recent acquisition by PNM Resources and (iii) the short-term debt incurred by PNM Resources to effectuate the acquisition of TNP Enterprises.

Applicants represent that (i) all dividends, redemptions of stock and other distributions authorized in this filing would be made in compliance with all applicable laws, (ii) no nonutility subsidiary that derives any material part of its revenues from the sale of goods, services or electricity to any public utility subsidiary shall declare or pay any dividend out of capital or unearned surplus, and (iii) no nonutility subsidiary shall declare or pay any dividend out of capital or unearned surplus unless it: (a) Has received excess cash as a result of the sale of its assets, (b) has engaged in a restructuring or reorganization, and/or (c) is returning capital to an associate company.

Fourth, TNMP requests authority to be added to a $400,000,000 Credit Facility Agreement among PNM Resources, Inc. and Bank of America, N.A. (as Administrative Agent for Lenders) dated November 15, 2004, as amended (''Revolving Credit Facility'') maintained by PNM Resources,[4] under which it would be eligible to borrow up to $100 million pursuant to a note with a five-year maturity and two additional one-year extension options (if approved by the banking institutions) through August 1, 2012. Borrowings made by PNM Resources pursuant to the Revolving Credit Facility are pursuant to and subject to authority conferred in *PNM Resources, Inc.*, HCAR No. 27934 (December 30, 2004). TNMP proposes that the same conditions apply to its borrowings under the Revolving Credit Facility. Borrowings by the individual borrowers under the Revolving Credit Facility occur on a several, not joint, obligation basis. Such borrowings would be evidenced by ''transactional'' promissory notes to be dated the date of such borrowings and to mature not more than five years after the date. Any such note may or may not be prepayable, in whole or in part, with or without a premium in the event of prepayment.[5] TNMP proposes to use the revolving credit facility to provide funds for its authorized operations.

B. Parameters for Financing Authorization

The following general terms would be applicable, as appropriate, to the transactions requested to be authorized in the Declaration:

(1) *Common Equity Ratio.* Applicants state that each would at all times maintain common equity (as reflected in its most recent Form 10–K or Form 10–

[2] Because PNM Resources acquired all of the stock of TNP Enterprises, S.E.C. Codification of Staff Accounting Bulletins (''SAB'') Topic 5J, Miscellaneous Accounting, provides that the ''push down basis of accounting'' be used for financial reporting purposes. The Commission has found ''push-down'' accounting appropriate on these circumstances. See HCAR No. 27896 (Sept. 27, 2004) at 18.

[3] The refinancing of the debt and preferred securities at the TNP Enterprises level has resulted in debt and preferred securities representing less than 40% (approximately 37.3%) of the consolidated capitalization of TNP Enterprises at the close of 2005, opposed to in excess of 100% in the absence of the acquisition and the relief sought in this filing.

[4] Section 2.6 of the Revolving Credit Facility specifically provides for First Choice and TNMP borrowing in accordance with its terms following the acquisition completed on June 6, 2005.

[5] On behalf of PNM Resources, TNMP notes that, at any given time, some or all of its outstanding short-term notes will be issuable in connection with the establishment of back-up credit facilities pursuant to PNM Resources' commercial paper program but that such credit facilities will not be drawn upon and no borrowings will occur except in certain limited circumstances at which time obligations under the related commercial paper will be paid. Thus, short-term notes issued in connection with the establishment of commercial paper back-up facilities backstop and duplicate commercial paper issuances and should not be deemed to be borrowings under TNMP or PNM Resources' financing authorization unless and until an actual borrowing occurs under the related credit facility. Any other result would ''double count'' PNM Resources' actual financial obligation.

Q filed with the Commission) of at least 30% of its consolidated capitalization. The term ''consolidated capitalization'' is defined to include, where applicable, all common stock equity (comprised of common stock, additional paid in capital, retained earnings, accumulated other comprehensive income or loss and/or treasury stock), minority interests, preferred stock, preferred securities, equity linked securities, long-term debt, short-term debt and current maturities.

(2) *Investment Grade Ratings.* With respect to the securities issuance authority proposed in this Declaration: (a) Within four business days after the occurrence of a Ratings Event,[6] Applicants would notify the Commission of its occurrence (by means of a letter, via fax, email or overnight mail to the Office of Public Utility Regulation); and (b) within 30 days after the occurrence of a Ratings Event, Applicants would submit a post-effective amendment to the Declaration explaining the material facts and circumstances relating to that Ratings Event (including the basis on which, taking into account the interests of investors, consumers and the public as well as other applicable criteria under the Act, it remains appropriate for Applicant(s) to issue the securities for which authorization has been requested in this Declaration, so long as Applicant(s) continue to comply with the other applicable terms and conditions specified in the Commission's order authorizing the transactions requested in this filing). Furthermore, no securities authorized as a result of this Declaration would be issued following the 60th day after a Ratings Event (other than common stock, commercial paper and short-term debt) by any Applicant if the downgraded rating(s) has or have not been upgraded to investment grade. Applicants request that the Commission reserve jurisdiction through the remainder of the period authorized in this filling over the issuance of any securities (other than common stock, commercial paper and short-term notes) that Applicants are prohibited from issuing as a result of the occurrence of a Ratings Event if no revised rating reflecting an investment grade rating has been issued.

(3) *Effective Cost of Money on Financings.* The effective cost of capital would not exceed competitive market rates available at the time of issuance for securities having the same or reasonably similar terms and conditions issued by similar companies of reasonably comparable credit quality; provided that in no event would the effective cost of capital exceed 500 basis points over comparable term U.S. Treasury securities (''Treasury Security'').

(4) *Maturity.* The final maturity of any long-term debt securities would not exceed five years. Short-term debt incurred under the Revolver would have a maturity of not to exceed one year.

(5) *Issuance Expenses.* The fees, commissions or other similar remuneration paid in connection with the non-competitive issue, sale or distribution of securities pursuant to this Declaration would not exceed the competitive market rates which are consistent with similar securities of comparable credit quality and maturities issued by other companies, provided that in no event would such fees and expenses exceed 500 basis points of the principal or face amount of the securities being issued or the gross proceeds of the financing.

(6) *Use of Proceeds.* The proceeds from the borrowing would be used for general corporate purposes including (i) the financing of working capital requirements of the PNM Resources system, (ii) cash management activities and (iii) other lawful purposes.

For the Commission, by the Division of Investment Management, pursuant to delegated authority.

Jill M. Peterson,

Assistant Secretary.

[FR Doc. E5–4406 Filed 8–12–05; 8:45 am]

BILLING CODE 8010–01–P

[6] A ''Ratings Event'' would occur if, during the authorization period requested in this filing, (i) any security issued by any Applicant upon original issuance, if rated, is rated below investment grade; or (ii) any outstanding security of any Applicant that is rated is downgraded below investment grade. For purposes of this provision, a security would be deemed to be rated ''investment grade'' if it is rated investment grade by at least one nationally recognized statistical rating organization, as that term is used in paragraphs (c)(2)(vi)(E), (F) and (H) of rule 15c3–1 under the 1934 Act.

SECURITIES AND EXCHANGE COMMISSION

[Release No. 34–52224; File No. SR–NSX–2005–03]

Self-Regulatory Organizations; National Stock Exchange; Order Granting Approval to Proposed Rule Change, and Amendments No. 1 and 2 Thereto, Relating to the Ongoing Qualification of the Members of NSX's Board of Directors

August 8, 2005.

On May 13, 2005, the National Stock Exchange (the ''Exchange'' or ''NSX'') filed with the Securities and Exchange Commission (''Commission''), pursuant to Section 19(b)(1) of the Securities Exchange Act of 1934 (''Act''),[1] and Rule 19b–4 thereunder,[2] a proposed rule change to amend its By-Laws to implement procedures for replacing a Director on its Board of Directors (''Board'') in the event that such Director fails to maintain the qualifications of his or her designated category. On June 10, 2005, the Exchange filed Amendment No. 1 to the proposed rule change.[3] On June 21, 2005, the Exchange filed Amendment No. 2 to the proposed rule change.[4] The proposed rule change, as amended, was published for comment in the **Federal Register** on June 30, 2005.[5] The Commission received no comments on the proposal.

The Exchange proposed to amend Article V, Section 3 of its By-Laws to provide that: (A) If a Director fails to maintain the necessary qualifications of his or her respective category, such Director would cease to be a Director upon a determination by the Board that the Director is no longer qualified, and his or her office would be deemed vacant for all purposes; (B) a Director who fails to maintain his or her necessary qualifications would have a grace period of the later of 45 days or until the next regular Board meeting to re-qualify for his or her respective category; and (C) a Director (other than an Independent Director) whose membership has been suspended does not lose his or her qualification by reason of such suspension during the period of suspension, but rather, such Director may remain a Director during the suspension unless he or she is removed.[6]

Under the proposal, the Board is the sole judge of whether a Director is no longer qualified for his designated category and whether a Director has re-qualified. Effective upon the expiration of the grace period for re-qualification, the Board may fill any resulting vacancy with a person who qualifies for the category in which the vacancy exists.

The Commission finds that the proposed rule change, as amended, is

[1] 15 U.S.C. 78s(b)(1).

[2] 17 CFR 240.19b–4.

[3] In Amendment No. 1, the Exchange clarified certain language in Section 3(a) of the proposed rule change, made conforming changes to Exhibit 1 to the proposed rule change and corrected page numbering errors in the initial filing.

[4] In Amendment No. 2, the Exchange revised the proposed rule text, as well as, the proposed rule change's statutory basis section.

[5] *See* Securities Exchange Act Release No. 51912 (June 23, 2005), 70 FR 37889.

[6] A Director may be removed with cause by a majority vote of those individuals or entities entitled to vote to elect such Director. *See* Article V, Section 4 of the NSX By-Laws.

consistent with the requirements of the Act and the rules and regulations thereunder applicable to a national securities exchange[7] and, in particular, the requirements of Section 6(b) of the Act[8] and the rules and regulations thereunder. The Commission finds specifically that the proposed rule change, in particular, is consistent with Section 6(b)(1) of the Act,[9] which requires that an exchange be so organized and have the capacity to be able to carry out the purposes of the Act and to comply, and to enforce compliance by its members, with the Act, and Section 6(b)(3) of the Act,[10] which requires, among other things, that the rules of an exchange assure a fair representation of its members in the selection of it directors and administration of its affairs.

The Commission believes that the proposed rule change, as amended, should clarify NSX's By-Laws with respect to replacing Directors who no longer qualify for their positions on the Board and, thereby, should increase the efficiency of NSX's governance. The Commission notes that the proposal is based on Section 6.3(b) of the Chicago Board Options Exchange, Incorporated's Constitution, which was previously approved by the Commission.

For the foregoing reasons, the Commission finds that the proposal does not raise any new issues of regulatory concern and is consistent with the requirements of Sections 6(b)(1)[11] and 6(b)(3)[12] of the Act.

It is therefore ordered, pursuant to Section 19(b)(2) of the Act,[13] that the proposed rule change (SR–NSX–2005–03) be, and hereby is, approved.

For the Commission, by the Division of Market Regulation, pursuant to delegated authority.[14]

Margaret H. McFarland,

Deputy Secretary.

[FR Doc. E5–4407 Filed 8–12–05; 8:45 am]

BILLING CODE 8010–01–P

[7] In approving this proposed rule change, the Commission notes that it has considered the proposed rule's impact on efficiency, competition, and capital formation. 15 U.S.C. 78c(f).

[8] 15 U.S.C. 78f(b).

[9] 15 U.S.C. 78f(b)(1).

[10] 15 U.S.C. 78f(b)(3).

[11] 15 U.S.C. 78f(b)(1).

[12] 15 U.S.C. 78f(b)(3).

[13] 15 U.S.C. 78s(b)(2).

[14] 17 CFR 200.30–3(a)(12).

SMALL BUSINESS ADMINISTRATION

Surety Bond Guarantee Program Fee

AGENCY: Small Business Administration (SBA).

ACTION: Notice of proposed fee increase. Request for public comments.

SUMMARY: SBA proposes to increase the guarantee fee charged on each guaranteed bond (other than bid bonds) and payable by surety companies participating in SBA's Surety Bond Guarantee (SBG) Program from 20% to 32% of the bond premium, effective October 1, 2005. SBA believes that the fee increase is necessary to increase the reserves in the SBG Program's revolving fund to better offset the unfunded program liabilities resulting from defaults under guaranteed bonds. SBA is requesting public comments on the proposed fee increase.

DATES: The Agency must receive comments on or before September 14, 2005.

ADDRESSES: You may submit comments by any of the following methods: Mail or Hand Delivery / Courier: Barbara Brannan, Special Assistant, U.S. Small Business Administration, Office of Surety Guarantees, 409 Third Street, SW., Washington, DC 20416; Fax: (202) 205–7600; Email: *Barbara.Brannan@sba.gov.*

FOR FURTHER INFORMATION CONTACT: Barbara Brannan, Special Assistant, Office of Surety Guarantees, (202) 205–6545, *Barbara.Brannan@sba.gov.*

SUPPLEMENTARY INFORMATION: Under the authority of Title IV, Part B of the Small Business Investment Act, as amended, 15 U.S.C. 694a, *et seq.*, SBA has entered into guarantee agreements with surety companies (individually referred to as ''the Surety'' or collectively referred to as ''Sureties'') for the purpose of inducing Sureties to provide necessary bonding to eligible small business concerns that would not otherwise meet their underwriting standards. All such agreements obligate SBA to indemnify the Surety against a specified percentage of loss, which the Surety may incur as a result of the breach of the bonded contract. Some agreements generally require SBA's prior approval before SBA's guarantee attaches, and the Sureties involved are known as Prior Approval Sureties. Other agreements allow the Surety to issue bonds that will be guaranteed without SBA's prior approval. These Sureties are Preferred (PSB) Sureties. In order to offset the expenses and liabilities of the Surety Bond Guarantee (SBG) Program, SBA charges both the small business concern (the Principal) and the Surety a guarantee fee (pursuant to the statutory directive that the SBG Program be administered ''on a prudent and economically justifiable basis''),15 U.S.C. 694b(h), and deposits the fees collected from them into a revolving fund.

Since 1998, the guarantee fee payable by Prior Approval Sureties under 13 CFR 115.32(c) and by the PSB Sureties under 13 CFR 115.66 has been 20% of the bond premium. SBA analyzed the SBG Program performance and trends to determine if changes in the guarantee fees charged to the Principal or the Surety are warranted. In particular, SBA evaluated past program performance and trends to project future potential losses, loss recoveries, and fee income. Based on this analysis, the current reserves in the SBG Program's revolving fund, which are supported by guarantee fees collected from Principals and Sureties, will be insufficient to cover unfunded program liabilities. These liabilities result from claims filed by Sureties under SBA's guarantee. SBA believes, therefore, that an increase in fees is necessary to supplement the current reserves in the revolving fund. This increase will be imposed on Sureties only. SBA is not proposing to increase the fee charged to Principals because raising their fees is inconsistent with the SBG Program purpose to make bonding assistance and contracting opportunities more accessible to small business concerns that would not otherwise meet the Surety's underwriting standards. In addition, increased fees would place a financial burden on small contractors, and may make them uncompetitive in the bonding market.

The proposed increase in guarantee fees payable by Prior Approval Sureties and PSB Sureties would take effect on October 1, 2005. The proposed date would allow sufficient time for SBG Program participants to make any necessary adjustments to their accounting systems.

SBA is requesting public comments on the proposed fee increase. Please clearly identify paper and electronic comments as ''Public Comments on Proposed Fee Increase for SBG Program,'' and send them to the contact listed in the **ADDRESSES** section of the preamble.

(Authority: 13 CFR 115.32(c) and 115.66)

Barbara Brannan,

Special Assistant, Office of Surety Guarantees.

[FR Doc. 05–16085 Filed 8–12–05; 8:45 am]

BILLING CODE 8025–01–P

DEPARTMENT OF STATE

[Public Notice 5156]

Culturally Significant Objects Imported for Exhibition Determinations: ''Drawn Together: Two Albums of Renaissance Drawings by Girolamo da Carpi''

SUMMARY: Notice is hereby given of the following determinations: Pursuant to the authority vested in me by the Act of October 19, 1965 (79 Stat. 985; 22 U.S.C. 2459), Executive Order 12047 of March 27, 1978, the Foreign Affairs Reform and Restructuring Act of 1998 (112 Stat. 2681, *et seq.*; 22 U.S.C. 6501 note, *et seq.*), Delegation of Authority No. 234 of October 1, 1999, Delegation of Authority No. 236 of October 19, 1999, as amended, and Delegation of Authority No. 257 of April 15, 2003 (68 FR 19875), I hereby determine that the objects to be included in the exhibition ''Drawn Together: Two Albums of Renaissance Drawings by Girolamo da Carpi,'' imported from abroad for temporary exhibition within the United States, are of cultural significance. The objects are imported pursuant to loan agreements with the foreign lenders. I also determine that the exhibition or display of the exhibit objects at The Rosenbach Museum and Library, Philadelphia, Pennsylvania, from on or about September 6, 2005, to on or about December 4, 2005, and at possible additional venues yet to be determined, is in the national interest. Public notice of these Determinations is ordered to be published in the **Federal Register**.

FOR FURTHER INFORMATION CONTACT: For further information, including a list of the exhibit objects, contact Wolodymyr R. Sulzynsky, the Office of the Legal Adviser, Department of State, (telephone: 202/453–8050). The address is Department of State, SA–44, 301 4th Street, SW., Room 700, Washington, DC 20547–0001.

Dated: August 8, 2005.

C. Miller Crouch,

Principal Deputy Assistant Secretary for Educational and Cultural Affairs, Department of State.

[FR Doc. 05–16129 Filed 8–12–05; 8:45 am]

BILLING CODE 4710–08–P

DEPARTMENT OF STATE

[Public Notice 4893]

United States International Telecommunication Advisory Committee Information Meeting on the World Summit on the Information Society; Notice of Meeting

The Department of State announces a meeting of the U.S. International Telecommunication Advisory Committee (ITAC). The purpose of the Committee is to advise the Department on matters related to telecommunication and information policy matters in preparation for international meetings pertaining to telecommunication and information issues.

The ITAC will meet to discuss the matters related to the second phase of the World Summit on the Information Society (WSIS), in preparation for the third WSIS Preparatory Committee Meeting. The meeting will take place on Thursday, September 8, 2005, from 10:30 a.m. to 12 p.m. in the board room of the Historic National Academy of Science Building. The National Academy of Sciences is located at 2100 C St., NW., Washington, DC.

Members of the public are welcome to participate and may join in the discussions, subject to the discretion of the Chair. Persons planning to attend this meeting should send the following data by fax to (202) 647–5957 or e-mail to *jillsonad@state.gov* not later than 24 hours before the meeting: (1) Name of the meeting, (2) your name, and (3) organizational affiliation. A valid photo ID must be presented to gain entrance to the National Academy of Sciences Building. Directions to the meeting location may be obtained by calling the ITAC Secretariat at 202 647–5205.

Dated: August 5, 2005.

Anne Jillson,

Foreign Affairs Officer, International Communications and Information Policy, Department of State.

[FR Doc. 05–16127 Filed 8–12–05; 8:45 am]

BILLING CODE 4710–07–P

DEPARTMENT OF TRANSPORTATION

Maritime Administration

[Docket No. MARAD 2005 22098]

Information Collection Available for Public Comments and Recommendations

ACTION: Notice and request for comments.

SUMMARY: In accordance with the Paperwork Reduction Act of 1995, this notice announces the Maritime Administration's (MARAD's) intention to request extension of approval for three years of a currently approved information collection.

DATES: Comments should be submitted on or before October 14, 2005.

FOR FURTHER INFORMATION CONTACT: Thomas Harrelson, Maritime Administration, 400 Seventh Street Southwest, Washington, DC 20590. Telephone: 202–366–4610; FAX: 202–366–5522; or e-mail: *tom.harrelson@dot.gov.* Copies of this collection also can be obtained from that office.

SUPPLEMENTARY INFORMATION:

Title of Collection: Monthly Report of Ocean Shipments Moving under Export-Import Bank Financing.

Type of Request: Extension of currently approved information collection.

OMB Control Number: 2133–0013.

Form Numbers: MA–518.

Expiration Date of Approval: Three years from date of approval by the Office of Management and Budget.

Summary of Collection of Information: 46 App. U.S.C. 1241–1, Public Resolution 17, required MARAD to monitor and enforce the U.S.-flag shipping requirements relative to the loans/guarantees extended by the Export-Import Bank (EXIMBANK) to foreign borrowers. Public Resolution 17 requires that shipments financed by Eximbank and that move by sea, must be transported exclusively on U.S.-flag registered vessels unless a waiver is obtained from MARAD.

Need and Use of the Information: The prescribed monthly report is necessary for MARAD to fulfill its responsibilities under Public Resolution 17, to ensure compliance of ocean shipping requirements operating under Eximbank financing, and to ensure equitable distribution of shipments between U.S.-flag and foreign ships. MARAD will use this information to report annually to Congress the total shipping activities during the calendar year.

Description of Respondents: Shippers subject to Eximbank financing.

Annual Responses: 336 responses.

Annual Burden: 168 hours.

Comments: Comments should refer to the docket number that appears at the top of this document. Written comments may be submitted to the Docket Clerk, U.S. DOT Dockets, Room PL–401, 400 Seventh Street Southwest, Washington, DC 20590. Comments also may be submitted by electronic means via the Internet at *http://dms.dot.gov/submit.* Specifically address whether this information collection is necessary for

proper performance of the functions of the agency and will have practical utility, accuracy of the burden estimates, ways to minimize this burden, and ways to enhance the quality, utility, and clarity of the information to be collected. All comments received will be available for examination at the above address between 10 a.m. and 5 p.m. e.d.t. (or e.s.t.), Monday through Friday, except Federal Holidays. An electronic version of this document is available on the World Wide Web at *http://dms.dot.gov.*

Privacy Act: Anyone is able to search the electronic form of all comments received into any of our dockets by the name of the individual submitting the comment (or signing the comment, if submitted on behalf of an association, business, labor union, etc.). You may review DOT's complete Privacy Act Statement in the **Federal Register** published on April 11, 2000 (Volume 65, Number 70; Pages 19477–78) or you may visit *http://dms.dot.gov.*

(Authority: 49 CFR 1.66.)

Dated: August 9, 2005.

By Order of the Maritime Administrator.

Joel C. Richard,

Secretary, Maritime Administration.

[FR Doc. 05–16095 Filed 8–12–05; 8:45 am]

BILLING CODE 4910–81–P

DEPARTMENT OF TRANSPORTATION

Maritime Administration

[Docket MARAD–2005–22095]

Farrell Lines Incorporated; Request for Comments Regarding the Proposed Purchase of Royal P & O Nedlloyd, N.V. by A.P. Moller—Maersk A/S and Its Impact on the Maritime Security Program (MSP)

By letter dated August 2, 2005, A.P. Moller—Maersk, A/S (APMM) advised the Maritime Administration of its intention to purchase Royal P & O Nedlloyd, N.V. (PONL). PONL, a Dutch consortium, is the ultimate parent corporation of Farrell Lines Incorporated (Farrell). Farrell has been awarded five new MSP Operating Agreements, Nos. MA/MSP–62 through 66, respectively, for the vessels CHESAPEAKE BAY, DELAWARE BAY, ENDEAVOR, ENDURANCE and ENTERPRISE for the participation of those vessels, or their replacements, in the MSP beginning October 1, 2005.

APMM, a Danish consortium, is the ultimate parent company of Maersk Line, Limited (Maersk). Maersk is currently the holder of 19 MSP Operating Agreements, Nos. MA/MSP–24 through 27 and MA/MSP 29 through 43, covering the operation of the vessels MAERSK MISSOURI, MAERSK VIRGINIA, MAERSK GEORGIA, MAERSK CAROLINA, SEALAND ACHIEVER, SEALAND FLORIDA, SEALAND PRIDE, SEALAND MOTIVATOR, SEALAND COMMITMENT, SEA-LAND ATLANTIC, SEA-LAND CHARGER, MAERSK ALABAMA, SEA-LAND LIGHTNING, SEA-LAND METEOR, MAERSK ARKANSAS, SEA-LAND INTREPID, SEALAND COMET, SEA-LAND PERFORMANCE and SEA-LAND QUALITY, respectively. Maersk has also been awarded 19 new MSP Operating Agreements, Nos. MA/MSP–79 through 97, to continue participation of its vessels in the MSP beginning October 1, 2005.

Implementation of APMM's proposed purchase will place 24 of the 60 vessels authorized under the new MSP program to be implemented on October 1, 2005, under the ownership or control of APMM. It should be noted that Farrell will continue to be the holder of those MSP Operating Agreements it now holds.

The purchase of PONL by APMM will, in effect, transfer ultimate ownership of Farrell from one foreign corporate entity to another. The transaction requires MARAD approval under Farrell's MSP Operating Agreements Nos. MA/MSP–62 through 66. This notice is being published as a matter of discretion. MARAD will consider all comments on this particular application, and the general topic of MSP Operating Agreement transfers, submitted in a timely fashion, and will take such action thereto as may be deemed appropriate.

A redacted copy of this proposal will be available for inspection at the Department of Transportation (DOT) Dockets Facility and on the DOT Dockets website (address information follows). Any person, firm or corporation having an interest in this proposal, and desiring to submit comments concerning the transaction, may file comments as follows. You should mention the docket number that appears at the top of this notice in any submission. Written comments should be submitted to the Docket Clerk, U.S. DOT Dockets, Room PL–401, Nassif Building, U.S. Department of Transportation, 400 Seventh Street, SW., Washington, DC 20590. Comments may also be submitted by electronic means via the Internet at *http://dmses.dot.gov/submit/*. You may call Docket Management at (202) 366–9324. You may visit the docket room to inspect and copy comments at the above listed address between 10 a.m. and 5 p.m. e.d.t., Monday through Friday, except holidays. An electronic version of this document is available on the World Wide Web at *http://dms.dot.gov*. Comments must be received by close of business August 25, 2005.

This notice is published as a matter of discretion, and the fact of its publication should in no way be considered a favorable or unfavorable decision on the proposed transaction, as filed, or as it may be amended.

Dated: August 9, 2005.

By Order of the Maritime Administration.

Joel C. Richard,

Secretary, Maritime Administration.

[FR Doc. 05–16012 Filed 8–12–05; 8:45 am]

BILLING CODE 4910–81–P

DEPARTMENT OF THE TREASURY

Alcohol and Tobacco Tax and Trade Bureau

Proposed Information Collection; Comment Request

AGENCY: Alcohol and Tobacco Tax and Trade Bureau (TTB), Treasury.

ACTION: Notice and request for comments.

SUMMARY: The Department of the Treasury and its Alcohol and Tobacco Tax and Trade Bureau, as part of their continuing effort to reduce paperwork and respondent burden, invite the public and other Federal agencies to comment on a proposed information collection, as required by the Paperwork Reduction Act of 1995 (44 U.S.C. 3501 *et seq.*). Currently, we are seeking comments on the form titled ''Formula and Process for Alcohol Products.''

DATES: We must receive your written comments on or before October 14, 2005.

ADDRESSES: You may send comments to Mary A. Wood, Alcohol and Tobacco Tax and Trade Bureau, at any of these addresses:

- P.O. Box 14412, Washington, DC 20044–4412;
- 202–927–8525 (facsimile); or
- *formcomments@ttb.gov* (e-mail).

Please reference the information collection's title, form or recordkeeping requirement number, and OMB number (if any) in your comment. If you submit your comment via facsimile, send no more than five 8.5 × 11 inch pages in order to ensure electronic access to our equipment.

FOR FURTHER INFORMATION CONTACT: To obtain additional information, copies of the information collection and its

instructions, or copies of any comments received, contact Mary A. Wood, Alcohol and Tobacco Tax and Trade Bureau, P.O. Box 14412, Washington, DC 20044–4412; or telephone 202–927–8210.

SUPPLEMENTARY INFORMATION:

Title: Formula and Process for Alcohol Beverages.

OMB Number: New collection.

TTB Form Number: 5100.51.

Abstract: TTB F 5100.51 is used to determine the classification of distilled spirits, wine, and malt beverages for labeling and for consumer protection. The form describes the person filing, the type of product to be made, and restrictions to the label and/or manufacturing process. The form will be used by TTB to ensure that a product is made and labeled properly and to audit distilled spirits, wine, and malt beverage operations. Records are kept indefinitely for this information collection. Also, this form makes obsolete TTB F 5120.29 ''Formula and Process for Wine'' (OMB Number 1513–0010), TTB F 5110.38 ''Formula for Distilled Spirits Under the Federal Alcohol Administration Act'' (OMB Number 1513–0046) and the Letterhead Statement of Process submitted with Brewer's Notice.

Current Actions: This is a new information collection and it is being submitted to OMB for approval.

Type of Review: Regular.

Affected Public: Business or other for-profit.

Estimated Number of Respondents: 2,000.

Estimated Total Annual Burden Hours: 8,000.

Request for Comments

Comments submitted in response to this notice will be included or summarized in our request for Office of Management and Budget (OMB) approval of this information collection. All comments are part of the public record and subject to disclosure. Please not do include any confidential or inappropriate material in your comments.

We invite comments on: (a) Whether this information collection is necessary for the proper performance of the agency's functions, including whether the information has practical utility; (b) the accuracy of the agency's estimate of the information collection's burden; (c) ways to enhance the quality, utility, and clarity of the information collected; (d) ways to minimize the information collection's burden on respondents, including through the use of automated collection techniques or other forms of information technology; and (e) estimates of capital or start-up costs and costs of operation, maintenance, and purchase of services to provide the requested information.

Dated: August 9, 2005.

Frank Foote,

Director, Regulations and Rulings Division.

[FR Doc. 05–16131 Filed 8–12–05; 8:45 am]

BILLING CODE 4810–31–P

Federal Register

Monday,
August 15, 2005

Part II

Department of Health and Human Services

Centers for Medicare & Medicaid Services

42 CFR Part 412

Medicare Program; Inpatient Rehabilitation Facility Prospective Payment System for FY 2006; Final Rule

DEPARTMENT OF HEALTH AND HUMAN SERVICES

Centers for Medicare & Medicaid Services

42 CFR Part 412

[CMS–1290–F]

RIN 0938–AN43

Medicare Program; Inpatient Rehabilitation Facility Prospective Payment System for FY 2006

AGENCY: Centers for Medicare & Medicaid Services (CMS), HHS.

ACTION: Final rule.

SUMMARY: This final rule will update the prospective payment rates for inpatient rehabilitation facilities for Federal fiscal year 2006 as required under section 1886(j)(3)(C) of the Social Security Act (the Act). Section 1886(j)(5) of the Act requires the Secretary to publish the classification and weighting factors for the inpatient rehabilitation facilities case-mix groups and a description of the methodology and data used in computing the prospective payment rates for that fiscal year.

In addition, we are implementing new policies and are changing existing policies regarding the prospective payment system within the authority granted under section 1886(j) of the Act.

DATES: These regulations are effective October 1, 2005. The updated IRF prospective payment rates are applicable for discharges on or after October 1, 2005 and on or before September 30, 2006 (FY 2006).

FOR FURTHER INFORMATION CONTACT: Pete Diaz, (410) 786–1235. Susanne Seagrave, (410) 786–0044. Mollie Knight, (410) 786–7948 for information regarding the market basket and labor-related share. August Nemec, (410) 786–0612 for information regarding the tier comorbidities. Zinnia Ng, (410) 786–4587 for information regarding the wage index and Core-Based Statistical Areas (CBSAs).

SUPPLEMENTARY INFORMATION:

Table of Contents

I. Background
A. General Overview of the Current Inpatient Rehabilitation Facility Prospective Payment System (IRF PPS)
B. Requirements for Updating the Prospective Payment Rates for IRFs
C. Operational Overview of the Current IRF PPS
D. Summary of the FY 2006 Proposed Update to the IRF PPS
II. Provisions of the Proposed Regulations
III. Analysis of and Responses to Public Comments
IV. Research to Support Refinements of the Current IRF PPS
V. Refinements to the Patient Classification System
A. Changes to the IRF Classification System
1. Development of the IRF Classification System
2. Description and Methodology Used To Develop the IRF Classification System in the August 7, 2001 Final Rule
a. Rehabilitation Impairment Categories
b. Functional Status Measures and Age
c. Comorbidities
d. Development of CMG Relative Weights
e. Overview of Development of the CMG Relative Weights
B. Changes to the Existing List of Tier Comorbidities
1. Changes to Remove Codes That Are Not Positively Related to Treatment Costs
2. Changes to Move Dialysis to Tier One
3. Changes to Move Comorbidity Codes Based on Their Marginal Cost
C. Changes to the CMGs
1. Changes for Updating the CMGs
2. Use of a Weighted Motor Score Index and Correction to the Treatment of Unobserved Transfer to Toilet Values
3. Changes for Updating the Relative Weights
VI. FY 2006 Federal Prospective Payment Rates
A. Reduction of the Standard Payment Amount to Account for Coding Changes
B. Adjustments to Determine the FY 2006 Standard Payment Conversion Factor
1. Market Basket Used for IRF Market Basket Index
a. Overview of the RPL Market Basket
b. Methodology for Operating Portion of the RPL Market Basket
c. Methodology for Capital Proportion of the RPL Market Basket
d. Labor-Related Share
2. Area Wage Adjustment
a. Revisions of the IRF PPS Geographic Classification
b. Current IRF PPS Labor Market Areas Based on MSAs
c. Core-Based Statistical Areas (CBSAs)
d. Revisions of the IRF PPS Labor Market Areas
i. New England MSAs
ii. Metropolitan Divisions
iii. Micropolitan Areas
e. Implementation of the CBSA-Based Labor Market Areas
f. Wage Index Data
3. Teaching Status Adjustment
4. Adjustment for Rural Location
5. Adjustment for Disproportionate Share of Low-Income Patients
6. Update to the Outlier Threshold Amount
7. Budget Neutrality Factor Methodology for Fiscal Year 2006
8. Description of the Methodology Used to Implement the Changes in a Budget Neutral Manner
9. Description of the IRF Standard Payment Conversion Factor for Fiscal Year 2006
10. Example of the Methodology for Adjusting the Federal Prospective Payment Rates
VII. Quality of Care in IRFs
VIII. Miscellaneous Comments Within the Scope of the Proposed Rule
IX. Miscellaneous Comments Outside the Scope of the Proposed Rule
X. Provisions of the Final Regulations
XI. Collection of Information Requirements
XII. Regulatory Impact Analysis

Acronyms

Because of the many terms to which we refer by acronym in this final rule, we are listing the acronyms used and their corresponding terms in alphabetical order below.

ADC Average Daily Census
AHA American Hospital Association
AMI Acute Myocardial Infarction
BBA Balanced Budget Act of 1997 (BBA), Pub. L. 105–33
BBRA Medicare, Medicaid, and SCHIP [State Children's Health Insurance Program] Balanced Budget Refinement Act of 1999, Pub. L. 106–113
BIPA Medicare, Medicaid, and SCHIP [State Children's Health Insurance Program] Benefits Improvement and Protection Act of 2000, Pub. L. 106–554
BLS Bureau of Labor Statistics
CART Classification and Regression Trees
CBSA Core-Based Statistical Areas
CCR Cost-to-charge ratio
CMGs Case-Mix Groups
CMI Case Mix Index
CMSA Consolidated Metropolitan Statistical Area
CPI Consumer Price Index
DSH Disproportionate Share Hospital
ECI Employment Cost Index
FI Fiscal Intermediary
FIM Functional Independence Measure (FIM™ is a registered trademark of UDS_{MR})
FIM–FRGs Functional Independence Measures-Function Related Groups
FRG Function Related Group
FTE Full-time equivalent
FY Federal Fiscal Year
GME Graduate Medical Education
HCRIS Healthcare Cost Report Information System
HIPAA Health Insurance Portability and Accountability Act
HHA Home Health Agency
IME Indirect Medical Education
IFMC Iowa Foundation for Medical Care
IPF Inpatient Psychiatric Facility
IPPS Inpatient Prospective Payment System
IRF Inpatient Rehabilitation Facility
IRF–PAI Inpatient Rehabilitation Facility-Patient Assessment Instrument
IRF–PPS Inpatient Rehabilitation Facility-Prospective Payment System
IRVEN Inpatient Rehabilitation Validation and Entry
LIP Low-income percentage
MEDPAR Medicare Provider Analysis and Review
MSA Metropolitan Statistical Area
NECMA New England County Metropolitan Area
NOS Not Otherwise Specified
NTIS National Technical Information Service
OMB Office of Management and Budget
OSCAR Online Survey, Certification, and Reporting
PAI Patient Assessment Instrument
PLI Professional Liability Insurance

PMSA Primary Metropolitan Statistical Area
PPI Producer Price Index
PPS Prospective Payment System
RIC Rehabilitation Impairment Category
RPL Rehabilitation Hospital, Psychiatric Hospital, and Long-Term Care Hospital Market Basket
TEFRA Tax Equity and Fiscal Responsibility Act
TEP Technical Expert Panel

I. Background

We received approximately 55 timely items of correspondence on the Inpatient Rehabilitation Facility Prospective Payment System for FY 2006 proposed rule (70 FR 30188). Summaries of the public comments and our responses to those comments are set forth below under the appropriate section heading of this final rule.

A. General Overview of the Current Inpatient Rehabilitation Facility Prospective Payment System (IRF PPS)

Section 4421 of the Balanced Budget Act of 1997 (BBA) (Pub. L. 105–33), as amended by section 125 of the Medicare, Medicaid, and SCHIP [State Children's Health Insurance Program] Balanced Budget Refinement Act of 1999 (BBRA) (Pub. L. 106–113), and by section 305 of the Medicare, Medicaid, and SCHIP Benefits Improvement and Protection Act of 2000 (BIPA) (Pub. L. 106–554), provides for the implementation of a per discharge prospective payment system (PPS), through section 1886(j) of the Social Security Act (the Act), for inpatient rehabilitation hospitals and inpatient rehabilitation units of a hospital (hereinafter referred to as IRFs).

Payments under the IRF PPS encompass inpatient operating and capital costs of furnishing covered rehabilitation services (that is, routine, ancillary, and capital costs) but not costs of approved educational activities, bad debts, and other services or items outside the scope of the IRF PPS. Although a complete discussion of the IRF PPS provisions appears in the August 7, 2001 final rule, we are providing below a general description of the IRF PPS.

The IRF PPS, as described in the August 7, 2001 final rule, uses Federal prospective payment rates across 100 distinct case-mix groups (CMGs). Ninety-five CMGs were constructed using rehabilitation impairment categories, functional status (both motor and cognitive), and age (in some cases, cognitive status and age may not be a factor in defining a CMG). Five special CMGs were constructed to account for very short stays and for patients who expire in the IRF.

For each of the CMGs, we developed relative weighting factors to account for a patient's clinical characteristics and expected resource needs. Thus, the weighting factors account for the relative difference in resource use across all CMGs. Within each CMG, the weighting factors were ''tiered'' based on the estimated effects that certain comorbidities have on resource use.

The Federal PPS rates were established using a standardized payment amount (previously referred to as the budget-neutral conversion factor). The standardized payment amount was previously called the budget neutral conversion factor because it reflected a budget neutrality adjustment for FYs 2001 and 2002, as described in § 412.624(d)(2) of our regulations. However, the statute requires a budget neutrality adjustment only for FYs 2001 and 2002. Accordingly, for subsequent years we believe it is more consistent with the statute to refer to the standardized payment as the standardized payment conversion factor, rather than refer to it as a budget neutral conversion factor (see 68 FR 45674, 45684 and 45685). Therefore, we will refer to the standardized payment amount in this final rule as the standard payment conversion factor.

For each of the tiers within a CMG, the relative weighting factors were applied to the standard payment conversion factor to compute the unadjusted Federal prospective payment rates. Under the current system, adjustments that accounted for geographic variations in wages (wage index), the percentage of low-income patients, and location in a rural area were applied to the IRF's unadjusted Federal prospective payment rates. In addition, adjustments were made to account for the early transfer of a patient, interrupted stays, and high cost outliers.

Lastly, the IRF's final prospective payment amount was determined under the transition methodology prescribed in section 1886(j) of the Act. Specifically, for cost reporting periods that began on or after January 1, 2002 and before October 1, 2002, section 1886(j)(1) of the Act and as specified in § 412.626 provide that IRFs transitioning into the PPS would receive a ''blended payment.'' For cost reporting periods that began on or after January 1, 2002 and before October 1, 2002, these blended payments consisted of 66⅔ percent of the Federal IRF PPS rate and 33⅓ percent of the payment that the IRF would have been paid had the IRF PPS not been implemented. However, during the transition period, an IRF with a cost reporting period beginning on or after January 1, 2002 and before October 1, 2002 could have elected to bypass this blended payment and be paid 100 percent of the Federal IRF PPS rate. For cost reporting periods beginning on or after October 1, 2002 (FY 2003), the transition methodology expired, and payments for all IRFs consist of 100 percent of the Federal IRF PPS rate.

We established a CMS Web site that contains useful information regarding the IRF PPS. The Web site URL is *http://www.cms.hhs.gov/providers/irfpps/default.asp* and may be accessed to download or view publications, software, and other information pertinent to the IRF PPS.

B. Requirements for Updating the Prospective Payment Rates for IRFs

On August 7, 2001, we published a final rule entitled ''Medicare Program; Prospective Payment System for Inpatient Rehabilitation Facilities'' in the **Federal Register** (66 FR at 41316), that established a PPS for IRFs as authorized under section 1886(j) of the Act and codified at subpart P of part 412 of the Medicare regulations. In the August 7, 2001 final rule, we set forth the per discharge Federal prospective payment rates for fiscal year (FY) 2002 that provided payment for inpatient operating and capital costs of furnishing covered rehabilitation services (that is, routine, ancillary, and capital costs) but not costs of approved educational activities, bad debts, and other services or items that are outside the scope of the IRF PPS. The provisions of the August 7, 2001 final rule were effective for cost reporting periods beginning on or after January 1, 2002. On July 1, 2002, we published a correcting amendment to the August 7, 2001 final rule in the **Federal Register** (67 FR at 44073). Any references to the August 7, 2001 final rule in this final rule include the provisions effective in the correcting amendment.

Section 1886(j)(5) of the Act and § 412.628 of the regulations require the Secretary to publish the classifications and weighting factors for the IRF CMGs and a description of the methodology and data used in computing the prospective payment rates for the upcoming FY. On August 1, 2002, we published a notice in the **Federal Register** (67 FR at 49928) to update the IRF Federal prospective payment rates from FY 2002 to FY 2003 using the methodology as described in § 412.624. As stated in the August 1, 2002 notice, we used the same classifications and weighting factors for the IRF CMGs that were set forth in the August 7, 2001 final rule to update the IRF Federal prospective payment rates from FY 2002

to FY 2003. We have continued to update the prospective payment rates each year in accordance with the methodology set forth in the August 7, 2001 final rule.

We published a proposed rule in the **Federal Register** (70 FR 30189) to update the IRF Federal prospective payment rates from FY 2005 to FY 2006, and we proposed revisions to the methodology described in § 412.624.

C. Operational Overview of the Current IRF PPS

As described in the August 7, 2001 final rule, upon the admission and discharge of a Medicare Part A fee-for-service patient, the IRF is required to complete the appropriate sections of a patient assessment instrument, the Inpatient Rehabilitation Facility-Patient Assessment Instrument (IRF–PAI). All required data must be electronically encoded into the IRF–PAI software product. Generally, the software product includes patient grouping programming called the GROUPER software. The GROUPER software uses specific Patient Assessment Instrument (PAI) data elements to classify (or group) the patient into a distinct CMG and account for the existence of any relevant comorbidities.

The GROUPER software produces a 5-digit CMG number. The first digit is an alpha-character that indicates the comorbidity tier. The last 4 digits represent the distinct CMG number. (Free downloads of the Inpatient Rehabilitation Validation and Entry (IRVEN) software product, including the GROUPER software, are available at the CMS Web site at *http://www.cms.hhs.gov/providers/irfpps/default.asp*).

Once the patient is discharged, the IRF completes the Medicare claim (UB–92 or its equivalent) using an alphanumeric CMG code and sends it to the appropriate Medicare fiscal intermediary (FI). (Claims submitted to Medicare must comply with both the Administrative Simplification Compliance Act (ASCA), Pub. L. 107–105, and the Health Insurance Portability and Accountability Act of 1996 (HIPAA), Pub. L. 104–191. Section 3 of ASCA requires the Medicare Program, subject to subsection (H), to deny payment under Part A or Part B for any expenses for items or services ''for which a claim is submitted other than in an electronic form specified by the Secretary.'' Subsection (h) provides that the Secretary shall waive such denial in two types of cases and may also waive such denial ''in such unusual cases as the Secretary finds appropriate.'' See also, 68 FR 48805 (August 15, 2003). Section 3 of ASCA operates in the context of the Administrative Simplification provisions of HIPAA, which include, among others, the transactions and code sets standards requirements codified as 45 CFR part 160 and 162, subparts A and I through R (generally known as the Transactions Rule). The Transactions Rule requires covered entities, including covered providers, to conduct covered electronic transactions according to the applicable transaction standards. See the program claim memoranda issued and published by CMS at *www.cms.hhs.gov/providers/edi/default.asp* (*http://www.cms.hhs.gov/provider/edi/default.asp*) and listed in the addenda to the Medicare Intermediary Manual, Part 3, section 3600. Instructions for the limited number of claims submitted to Medicare on paper are located in section 3604 of Part 3 of the Medicare Intermediary Manual.

The Medicare Fiscal Intermediary (FI) processes the claim through its software system. This software system includes pricing programming called the PRICER software. The PRICER software uses the CMG code, along with other specific claim data elements and provider-specific data, to adjust the IRF's prospective payment for interrupted stays, transfers, short stays, and deaths and then applies the applicable adjustments to account for the IRF's wage index, percentage of low-income patients, rural location, and outlier payments.

D. Summary of the FY 2006 Proposed Update to the IRF PPS

In the FY 2006 proposed rule (70 FR 30188), we proposed a number of refinements to the IRF PPS case-mix classification system (the CMGs and the corresponding relative weights) and the case-level and facility-level adjustments. The refinements that we proposed were based on analyses by RAND using calendar year 2002 and FY 2003 data.

Several new developments warranted proposing these refinements, including—(1) The availability of more recent 2002 and 2003 data; (2) better coding of comorbidities and patient severity; (3) more complete data; (4) new data sources for imputing missing values; and (5) improved statistical approaches.

Our proposals included the following key changes:

The FY 2006 IRF PPS proposed rule (70 FR 30188, 30234 through 30241) included a proposal to adopt OMB's Core Based Statistical Area (CBSA) market area definitions in a budget neutral manner. This geographic adjustment is made using a 1-year lag of the pre-reclassification hospital wage index (FY 2001 hospital wage data).

The FY 2006 proposed rule (70 FR 30188, 30222) also included a proposal to implement a payment adjustment to account for changes in coding. We proposed to reduce the standard payment amount by 1.9 percent to account for changes in coding following implementation of the IRF PPS. The analysis conducted by CMS's contractor found that the real change in the case-mix was between negative 2.4 percent and positive 1.5 percent, with the rest of the change (between 1.9 percent and 5.8 percent) attributable to coding changes. CMS proposed to reduce the standard payment amount by the lowest of these estimates.

In addition, in the FY 2006 proposed rule (70 FR 30188), we proposed modifications to the case mix groups, tier comorbidities, and relative weights. The proposed rule included a number of adjustments to the IRF classification system that are designed to improve the system's ability to predict IRF costs. The new data indicate that moving or eliminating some comorbidity codes from the tiers, redefining the case mix groups, and other minor changes to the system could improve the ability of the classification system to ensure that Medicare payments to IRFs continue to be aligned with the costs of care.

In addition, the FY 2006 IRF PPS proposed rule (70 FR 30188, 30241) contained a proposal to implement a new teaching status adjustment for IRFs, similar to the one recently adopted for inpatient psychiatric facilities. We proposed to implement the teaching status adjustment in a budget neutral manner.

The FY 2006 IRF PPS proposed rule (70 FR 30188, 30222) also contained a proposal to revise the market basket. We proposed to use a new market basket reflecting the operating and capital cost structures for rehabilitation, psychiatric, and long term care hospitals to update IRF payment rates. The proposed new market basket excludes cancer hospitals and children's hospitals. For the FY 2006 proposed rule (70 FR 30188), we proposed a market basket increase for FY 2006 of 3.1 percent.

In the FY 2006 proposed rule (70 FR 30188, 30244 through 30246), we also proposed to update the rural adjustment (from 19.1 percent to 24.1 percent), the low-income patient adjustment (from an exponent of 0.484 to an exponent of 0.636), and the outlier threshold amount (from $11,211 to $4,911). We proposed to implement the changes to the rural and low-income percentage updates in a budget neutral manner.

Lastly, in the FY 2006 proposed rule (70 FR 30188), we estimated that the proposed changes would increase costs to the Medicare program for IRF services in FY 2006 by $180 million over FY 2005 levels. The estimated increased cost to the Medicare program was due to the estimated IRF market basket of 3.1 percent, the 1.9 percent reduction to the standard payment amount to account for changes in coding that affect total estimated aggregate payments, and the update to the outlier threshold amount. We proposed to make the changes to the IRF labor-related share and the wage indices, the case mix groups, tier comorbidities, and relative weights, the new IME adjustment, the updated rural adjustment, and the updated LIP adjustment in a budget neutral manner. Thus, these proposed changes would have no overall effect on estimated costs to the Medicare program.

II. Provisions of the Proposed Regulations

In the FY 2006 proposed update to the IRF PPS (70 FR 30188), hereinafter referred to as the FY 2006 proposed rule, we proposed to make revisions to the regulations to implement the proposed PPS for IRFs for FY 2006 and subsequent fiscal years. Specifically, we proposed to make conforming changes in 42 CFR part 412. These proposed revisions and others are discussed in detail below.

A. Section 412.602 Definitions

In § 412.602, we proposed to revise the definitions of ''Rural area'' and ''Urban area'' to read as follows:

Rural area means: For cost-reporting periods beginning on or after January 1, 2002, with respect to discharges occurring during the period covered by such cost reports but before October 1, 2005, an area as defined in § 412.62(f)(1)(iii). For discharges occurring on or after October 1, 2005, rural area means an area as defined in § 412.64(b)(1)(ii)(C).

Urban area means: For cost-reporting periods beginning on or after January 1, 2002, with respect to discharges occurring during the period covered by such cost reports but before October 1, 2005, an area as defined in § 412.62(f)(1)(ii). For discharges occurring on or after October 1, 2005, urban area means an area as defined in § 412.64(b)(1)(ii)(A) and § 412.64(b)(1)(ii)(B).

B. Section 412.622 Basis of Payment

In this section, we proposed to correct the cross references in paragraphs (b)(1) and (b)(2)(i). In paragraph (b)(1), we proposed to remove the cross references ''§ 413.85 and § 413.86 of this chapter'' and add in their place ''§ 413.75 and § 413.85 of this chapter.'' In paragraph (b)(2)(i), we proposed to remove the cross reference ''§ 413.80 of this chapter'' and add in its place ''§ 413.89 of this chapter.''

C. Section 412.624 Methodology for Calculating the Federal Prospective Payment Rates

In this section, we proposed to make the following revisions:

- In paragraph (d)(1), remove the cross reference to ''paragraph (e)(4)'' and add in its place ''paragraph (e)(5).''
- Add a new paragraph (d)(4).
- Redesignate paragraphs (e)(4) and (e)(5) as paragraphs (e)(5) and (e)(6).
- Add a new paragraph (e)(4).
- Revise newly redesignated paragraph (e)(5).
- Revise newly redesignated paragraph (e)(6).
- Add a new paragraph (e)(7).
- In paragraph (f)(2)(v), remove the cross references to ''paragraphs (e)(1), (e)(2), and (e)(3) of this section'' and add in their place ''paragraphs (e)(2), (e)(3), (e)(4), and (e)(7) of this section.''

D. Additional Changes

We also proposed the following changes:

- Reduce the standard payment amount by 1.9 percent to account for coding changes.
- Revise the comorbidity tiers and CMGs.
- Use a weighted motor score index in assigning patients to CMGs.
- Update the relative weights.
- Update payments for rehabilitation facilities using a market basket reflecting the operating and capital cost structures for the RPL market basket.
- Provide the weights and proxies to use for the FY 2002-based RPL market basket.
- Indicate the methodology for the capital portion of the RPL market basket.
- Adopt the new geographic labor market area definitions as specified in § 412.64(b)(1)(ii)(A)–(C).
- Use the New England MSAs as determined under the proposed new CBSA-based labor market area definitions.
- Implement a budget neutral 3 year hold harmless policy for FY 2005 rural IRFs redesignated as urban in FY 2006.
- Use FY 2001 acute care hospital wage data in computing the FY 2006 IRF PPS payment rates.
- Implement a teaching status adjustment.
- Update the formulas used to compute the rural and the LIP adjustments to IRF payments.
- Update the outlier threshold amount to maintain total estimated outlier payments at 3 percent of total estimated payments.
- Revise the methodology for computing the standard payment conversion factor (for FY 2006 only) to make the CMG and tier changes, the teaching status adjustment, and the updates to the rural and LIP adjustments in a budget neutral manner.

III. Analysis of and Responses to Public Comments

As stated above, we received approximately 55 timely items of correspondence containing multiple comments on the FY 2006 proposed rule (70 FR 30188) from providers, health industry organizations, the Medicare Payment Advisory Commission, and others. In general, commenters expressed some concerns about our proposals in light of other changes occurring in the IRF PPS at this time and suggested that we wait to implement the proposals until other recent IRF policy changes are fully implemented. However, many commenters supported the proposed changes to the facility-level adjustments. Summaries of the public comments received on the proposed provisions and our responses to those comments are provided in the appropriate sections of the preamble of this final rule.

IV. Research To Support Refinements of the Current IRF PPS

As described in the August 7, 2001 final rule, we contracted with the RAND Corporation to analyze IRF data to support our efforts in developing the CMG patient classification system and the IRF PPS. Since then, we have continued our contract with RAND to support us in developing potential refinements to the classification system and the PPS. RAND has also developed a system to monitor the effects of the IRF PPS on patients' access to IRF care and other post-acute care services.

1. History of RAND's Research on the IRF PPS

In 1995, RAND began extensive research, sponsored by us, on the development of a per-discharge based PPS using a patient classification system known as Functional Independence Measures—Function Related Groups (FIM–FRGs) for IRFs. The results of RAND's earliest research, using 1994 data, were released in September 1997 and are contained in two reports available through the National Technical Information Service (NTIS). The reports are: Classification System

for Inpatient Rehabilitation Patients—A Review and Proposed Revisions to the Function Independence Measure—Function Related Groups, NTIS order number PB98–105992INZ, and Prospective Payment System for Inpatient Rehabilitation, NTIS order number PB98–106024INZ.

In July 1999, we contracted with RAND to update its earlier research. The update included an analysis of Functional Independence Measure (FIM) data, the Function Related Groups (FRGs), and the model rehabilitation PPS using 1996 and 1997 data. The purpose of updating the earlier research was to develop the underlying data necessary to support the Medicare IRF PPS based on CMGs for the November 3, 2000 proposed rule (65 FR at 66313). RAND expanded the scope of its earlier research to include the examination of several payment elements, such as comorbidities, facility-level adjustments, and implementation issues, including evaluation and monitoring. Then, to develop the provisions of the August 7, 2001 final rule (66 FR 41316, 41323), RAND did similar analysis on calendar year 1998 and 1999 Medicare Provider Analysis and Review (MedPAR) files and patient assessment data.

We have continued to contract with RAND to help us identify potential refinements to the IRF PPS. The refinements we proposed to make to the IRF PPS, and which we are finalizing in this final rule, are based on the analyses and recommendations from RAND. In addition, RAND sought advice from a technical expert panel (TEP), which reviewed their methodology and findings.

2. Data Files Used for Analysis of the Current IRF PPS

RAND conducted updated analyses of the patient classification system, case mix and coding changes, and facility-level adjustments for the IRF PPS using data from calendar year 2002 and FY 2003. This is the first time CMS or RAND has had data generated by IRFs after the implementation of the IRF PPS that are available for data analysis.

Public comments and our responses on RAND's research to support the proposed refinements are summarized below:

Comment: Several commenters expressed concerns about basing the refinements that we proposed in the FY 2006 proposed rule (70 FR 30188) on analyses of calendar year 2002 and FY 2003 data, which do not reflect IRF case mix changes currently taking place in response to our recent enforcement of the classification criterion, commonly known as the ''75 percent rule.'' These commenters suggested that we wait for analysis of future data (CY 2005 or beyond) to become available before implementing refinements to the IRF PPS.

Response: As discussed in the August 7, 2001 final rule (66 FR 41316), we used RAND's analysis of calendar year 1998 and 1999 Medicare Provider Analysis and Review (MedPAR) files and patient assessment data to develop the initial classification system and prospective payment amounts for the IRF PPS. These data were from a period of time before the IRF PPS when IRFs' reimbursement was based on costs, subject to certain limits, rather than on prospective payment amounts. Furthermore, we used the best available 1998 and 1999 data from a time period that also preceded enforcement of the 75 percent rule requirements. Today, we have 2002 and 2003 data that represents all Medicare-covered IRF cases in a post-PPS environment and, therefore, portrays a recent and complete picture of IRFs' patient populations. In addition, the IRF payment system has undergone a major transformation since the 1998 and 1999 data in the form of a change from a cost-based payment system to a PPS that became effective with the cost reporting periods beginning on or after January 1, 2002. Because of this transformation, we believe the data we have on which to base refinements to the IRF PPS will help ensure that IRF PPS payments accurately reflect the costs of care in an IRF.

This is because these data allow RAND to obtain precision in their analyses, and ensures that the data are not over- or under-representing particular types of facilities or patients. We believe it is appropriate and necessary to implement refinements to the IRF PPS at this time, based on the best available data we have from calendar year 2002 and FY 2003. Since analysis of this data indicates that we have an opportunity at this time, through the proposed refinements, to improve the alignment between IRF payments and the cost of care, we believe it is important to proceed with the refinements discussed in this final rule.

However, we agree with the commenters that we should continue to collect the best available data we can to monitor the IRF PPS and ensure that IRF payments are appropriately aligned with costs of care and that Medicare patients continue to have appropriate access to IRF services. We will, whenever necessary, use the best data available in the future to propose appropriate refinements that will further improve the alignment between IRF payments and the costs of care. Thus, to the extent changes in case mix occur due to enforcement of the 75 percent rule, these changes should appear in later data that we will use to propose refinements in the future.

Comment: Several commenters noted that 98 IRF providers in RAND's analysis data affiliated with HealthSouth decided to omit home office cost data from the 2002 and 2003 cost reports that were filed with us. The commenters questioned whether this omission might have affected the results of RAND's analysis and, therefore, our proposed policies.

Response: After publication of the FY 2006 proposed rule (70 FR 30188), we learned that 98 providers in our data file that were affiliated with HealthSouth omitted home office cost data from the 2002 and 2003 cost reports that were filed with us and that RAND used in the analysis of the FY 2006 proposed rule (70 FR 30188). These data were a voluntary omission on the part of these providers, but nevertheless affect some of the distributional policies (that is, the proposed teaching status adjustment, the proposed changes to the rural and LIP adjustments, and the proposed change to the outlier threshold) contained in the proposed rule. However, because RAND used the hospital-specific relative value method (that is, the methodology that effectively controls for inter-hospital variation while estimating the relative costs of different types of patients within each hospital) for all of the proposed changes to the classification system described in section V of this final rule (that is, the proposed changes to the tier comorbidities, the proposed changes to the CMG definitions, the proposed weighted motor score methodology, the proposed change to the coding of the transfer-to-toilet item, and the proposed update of the relative weights), these proposed changes would not have been affected by the omission of the home office cost data. In other words, RAND examined the relative costs of patients within each IRF, so the fact that the omission of HealthSouth's home office costs caused total costs to be understated in the cost report data would not have mattered for the proposed classification system changes described in section V of this final rule.

In addition, the omission of the home office cost data would have no effect on the proposed 1.9 percent reduction to the standard payment amount (discussed in section VI.A of this final rule) because cost report data were not

used in the analysis that supports this proposed reduction.

Although the omission of the home office cost data, in theory, could have had some effect on the estimates of the proposed FY 2002-based RPL market basket (discussed in section VI.B.1 of this final rule), our Office of the Actuary conducted some preliminary analyses of the effects on the market basket calculation and, based on these analyses, determined that these effects would likely be small. Home office costs represent only one of many cost categories (including, but not limited to, salaries, benefits, professional liability insurance, and pharmacueticals) that are used to develop the cost category weights. We believe the absence of HealthSouth home office costs in this market basket has a minor impact on the distribution of these weights and, by extension, the final market basket update itself. Thus, we did not believe it was necessary to recalculate the market basket.

Finally, since the facility-level adjustments we proposed in the FY 2006 proposed rule (70 FR 30188) were calculated using regression analysis based on the relative total costs associated with care in different types of IRFs (that is, urban/rural, teaching/non-teaching, low DSH percentage/high DSH percentage), the omission of HealthSouth's home office costs had some effect on the results of these analyses. The largest example is for the cost differential between urban and rural facilities in our analysis. Since the providers that omitted the home office cost data were largely urban facilities, their lower reported total cost data caused the differential between urban and rural facilities to be larger in the initial analyses. The same was true, to a lesser extent, with the teaching status adjustment and the LIP adjustment.

Furthermore, the omission of the home office cost data caused overall reported costs to be lower in these facilities and, therefore, affected the cost-to-charge ratios computed for these facilities for FYs 2002 and 2003. We used these cost-to-charge ratios to determine the proposed update to the outlier threshold amount. Therefore, analysis of the data indicates that the outlier threshold amount we proposed in the FY 2006 proposed rule (70 FR 30188) was affected by the omission of the home office cost data.

Given that the facility-level adjustments, such as the rural, LIP, and teaching status adjustments, and the outlier threshold amount for all IRFs were likely affected by the decision of this one large for-profit chain provider to omit home office cost data from the FY 2002 and FY 2003 cost reports, we believe it is appropriate for us to recalculate the values for these adjustments and for the outlier threshold using data that accounts for the omitted home office costs. Thus, we obtained the FY 2004 HealthSouth home office cost statement and, from this cost report statement, compiled the home office cost data for each of the individual HealthSouth IRF providers listed. Of the 98 providers that omitted home office cost data for FYs 2002 and 2003, 92 of the providers have had home office cost data reported on the FY 2004 home office cost statement; and six providers did not have any home office cost information for FY 2004.

We considered several options with respect to incorporating the missing HealthSouth home office costs into the data RAND used to conduct the analyses for this final rule. First, we considered the option of removing all of the HealthSouth cost report data from the analysis and re-computing the facility-level adjustments (that is, the rural adjustment, the LIP adjustment, and the teaching status adjustment) and the outlier threshold without the HealthSouth cost report data. Dropping all of the cost report data for 98 of the 1,188 facilities in RAND's analysis file, especially when they are large urban facilities, would seem to skew the data even further because we would be leaving out a substantial amount of cost report data connected with one specific type of IRF provider (i.e., urban IRFs). Leaving out the data for these facilities would make other types of IRFs that are left in the data appear to have more of an effect on the regression analysis than they actually do. Since we were hoping to reduce the bias in the data, rather than increase the bias, we generally rejected this option.

The second option we considered was to update the analysis using FY 2004 data for all providers and re-compute the facility-level adjustments and the outlier threshold using the FY 2004 cost report data. Unfortunately, the FY 2004 data have only recently been submitted by all IRF providers, and it would have been impossible for RAND and CMS to have completed all the necessary re-analysis of all of the proposed policies with the FY 2004 cost report data for all IRF providers in time for the proposed policies to be implemented in FY 2006.

The third option we considered was to use the FY 2004 home office cost data that we were able to obtain from the HealthSouth home office cost statement for 92 of the 98 HealthSouth IRF providers, standardize all of the other cost report data from FY 2003 for the 98 HealthSouth providers and the other non-HealthSouth providers using the most recent market basket for FY 2004, and fill in the FY 2004 home office cost data for the 92 HealthSouth providers for which we had data. This option enabled us to meet the October 1 implementation date of our updates as well as to make those updates and payment adjustments as accurate as possible. Next, we considered two options for treating the six HealthSouth facilities for which we did not have FY 2004 home office cost data: We considered leaving those six IRFs' cost data as is, without adding any home office cost data since we had none from FY 2004 to add. The other option we considered for treating these six facilities was to take the average home office costs as a percentage of total costs for the 92 facilities (which came to approximately 13 percent) and use this as an estimate of home office costs for the 6 facilities. We chose the second of the two options, which meant that we inflated total costs for those six facilities by the average of about 13 percent, because it seemed inappropriate to ignore the fact that cost data was missing for these six facilities and 13 percent appeared to be a reasonable estimate of home office costs generally for IRFs (from the general analysis we were able to perform).

Because we believe the data file that results from the third option is more complete than the data RAND previously used to compute the proposed facility-level adjustments and the proposed outlier threshold amount for the FY 2006 proposed rule (70 FR 30188), we used the data from the third option described above to re-compute the values for the teaching status adjustment (described in more detail in section VI.B.3 of this final rule), the rural adjustment (described in more detail in section VI.B.4 of this final rule), the LIP adjustment (described in more detail in section VI.B.5 of this final rule), and the outlier threshold amount (described in more detail in section VI.B.6 of this final rule). Because the values of these adjustments have changed, we also re-computed the budget neutrality factors and, thus, the standard payment conversion factor.

Comment: Several commenters requested that we make IRF claims data, IRF–PAI data, patient-specific CMG data, and cost report files available to the public so that the public would have the opportunity to recreate the analyses used in developing the proposed refinements for the FY 2006 proposed rule (70 FR 30188).

Response: The data files mentioned by the commenters are generally available (and were generally available

during the comment period for the FY 2006 proposed rule (70 FR 30188)) to the public through CMS's standard data distribution systems. More information on CMS's data distribution policies is available on CMS's website at *http://www.cms.hhs.gov/researchers/statsdata.asp*.

Comment: A few commenters requested that we make available RAND's research using FY 2003 data. They noted that 3 of the 4 reports published on RAND's website for public access are based on analysis of calendar year 2002 data. One of RAND's publicly available reports is based on analysis of FY 2003 data.

Response: We asked RAND to use the best available, most current data possible for the analyses contained in the FY 2006 proposed rule (70 FR 30188) and this final rule. This was generally FY 2003 data.

The updated analysis is generally not contained in RAND's reports, and RAND has indicated to CMS that they have no plans to publish the updated analyses (using the FY 2003 data) after publication of the final rule. However, RAND informed us that, in all of the FY 2003 analyses for the FY 2006 proposed rule (70 FR 30188) and for this final rule, they used the identical methodologies presented in the reports available on RAND's website and reviewed by RAND's technical expert panel. The only change was that RAND used updated data from FY 2003 (and FY 2004 HealthSouth home office cost data, as discussed above). Thus, interested parties should examine the reports available on RAND's website for the detailed methodology used to develop the proposed and final revisions. In addition, interested parties may contact RAND directly for more information regarding the analysis of FY 2003 data.

Comment: One commenter asked whether a large number of short period cost reports for periods ending in 2001 might have affected RAND's research findings and, if so, how RAND handled this issue in the data.

Response: We were unable to find any reasons for the unusually large number of short period cost reports the commenter is indicating for cost report periods ending in 2001. However, since some of RAND's analysis for this final rule was based on calendar year 2002 data, and the majority of RAND's analysis for this final rule was based on FY 2003 data, we do not believe that a spike in the number of short period cost reports in 2001 would have had an effect on RAND's analyses.

V. Refinements to the Patient Classification System

A. Changes to the IRF Classification System

1. Development of the IRF Classification System

Section 1886(j)(2)(A)(i) of the Act, as amended by section 125 of the Medicare, Medicaid, and SCHIP Balanced Budget Refinement Act of 1999 requires the Secretary to establish ''classes of patient discharges of rehabilitation facilities by functional-related groups (each referred to as a case-mix group or CMG), based on impairment, age, comorbidities, and functional capability of the patients, and such other factors as the Secretary deems appropriate to improve the explanatory power of functional independence measure-function related groups.'' In addition, the Secretary is required to establish a method of classifying specific patients in IRFs within these groups as specified in § 412.620.

In the August 7, 2001 final rule (66 FR at 41342), we implemented a methodology to establish a patient classification system using CMGs. The CMGs are based on the FIM–FRG methodology and reflect refinements to that methodology.

In general, a patient is first placed in a major group called a rehabilitation impairment category (RIC) based on the patient's primary reason for inpatient rehabilitation, (for example, a stroke). The patient is then placed into a CMG within the RIC, based on the patient's ability to perform specific activities of daily living, and sometimes the patient's cognitive ability and/or age. Other special circumstances, such as the occurrence of very short stays, or cases where the patient expired, are also considered in determining the appropriate CMG.

We explained in the August 7, 2001 final rule that further analysis of FIM and Medicare data may result in refinements to CMGs. In the August 7, 2001 final rule, we used the most recent FIM and Medicare data available at that time (that is 1998 and 1999 data). Developing the CMGs with the 1998 and 1999 data resulted in 95 CMGs based on the FIM–FRG methodology. The data also supported the establishment of five additional special CMGs that improved the explanatory power of the FIM–FRGs. We established one additional special CMG to account for very short stays and four additional special CMGs to account for cases where the patient expired. In addition, we established a payment of an additional amount for patients with at least one relevant comorbidity in certain CMGs.

2. Description and Methodology Used To Develop the IRF Classification System in the August 7, 2001 Final Rule

a. Rehabilitation Impairment Categories

In the first step to develop the CMGs, the FIM data from 1998 and 1999 were used to group patients into RICs. Specifically, the impairment code from the assessment instrument used by clients of UDSmr and Healthsouth indicates the primary reason for the inpatient rehabilitation admission. This impairment code is used to group the patient into a RIC. Currently, we use 21 RICs for the IRF PPS.

b. Functional Status Measures and Age

After using the RIC to define the first division among the inpatient rehabilitation groups, we used functional status measures and age to partition the cases further. In the August 7, 2001 final rule, we used 1998 and 1999 Medicare bills with corresponding FIM data to create the CMGs and more thoroughly examine each item of the motor and cognitive measures. Based on the data used for the August 7, 2001 final rule, we found that we could improve upon the CMGs by making a slight modification to the motor measure. We modified the motor measure by removing the transfer to tub/shower item because we found that an increase in a patient's ability to perform functional tasks with less assistance for this item was associated with an increase in cost, whereas an increase in other functional items decreased costs. We describe below the statistical methodology (Classification and Regression Trees (CART)) that we used to incorporate a patient's functional status measures (modified motor score and cognitive score) and age into the construction of the CMGs in the August 7, 2001 final rule.

We used the CART methodology to divide the rehabilitation cases further within each RIC. (Further information regarding the CART methodology can be found in the seminal literature on CART (Classification and Regression Trees, Leo Breiman, Jerome Friedman, Richard Olshen, Charles Stone, Wadsworth Inc., Belmont CA, 1984: pp. 78–80).) We chose to use the CART method because it is useful in identifying statistical relationships among data and, using these relationships, constructing a predictive model for organizing and separating a large set of data into smaller, similar groups. Further, in constructing the CMGs, we analyzed the extent to which the independent

variables (motor score, cognitive score, and age) helped predict the value of the dependent variable (the log of the cost per case). The CART methodology creates the CMGs that classify patients with clinically distinct resource needs into groups. CART is an iterative process that creates initial groups of patients and then searches for ways to divide the initial groups to decrease the clinical and cost variances further and to increase the explanatory power of the CMGs. Our current CMGs are based on historical data. In order to develop a separate CMG, we need to have data on a sufficient number of cases to develop coherent groups. Therefore, we are removing these codes from the tiers that increase payment.

c. Comorbidities

Under the statutory authority of section 1886(j)(2)(C)(i) of the Act, we proposed to make several changes to the comorbidity tiers associated with the CMGs for comorbidities that are not positively related to treatment costs, or their excessive use is questionable, or their condition could not be differentiated from another condition. Specifically, section 1886(j)(2)(C)(i) of the Act provides the following: The Secretary shall from time to time adjust the classifications and weighting factors established under this paragraph as appropriate to reflect changes in treatment patterns, technology, case mix, number of payment units for which payment is made under this title and other factors that may affect the relative use of resources. The adjustments shall be made in a manner so that changes in aggregate payments under the classification system are a result of real changes and are not a result of changes in coding that are unrelated to real changes in case mix.

A comorbidity is a specific patient condition that is secondary to the patient's principal diagnosis or impairment that is used to place a patient into a RIC. A patient could have one or more comorbidities present during the inpatient rehabilitation stay. Our analysis for the August 7, 2001 final rule found that the presence of a comorbidity could have a major effect on the cost of furnishing inpatient rehabilitation care. We also stated that the effect of comorbidities varied across RICs, significantly increasing the costs of patients in some RICs, while having no effect in others. Therefore, for the August 7, 2001 final rule, we linked frequently occurring comorbidities to impairment categories in order to ensure that all of the chosen comorbidities were not an inherent part of the diagnosis that assigns the patient to the RIC.

Furthermore, in the August 7, 2001 final rule, we indicated that comorbidities can affect cost per case for some of the CMGs, but not all. When comorbidities substantially increased the average cost of the CMG and were determined to be clinically relevant (not inherent in the diagnosis in the RIC), we developed CMG relative weights adjusted for comorbidities (§ 412.620(b)).

d. Development of CMG Relative Weights

Section 1886(j)(2)(B) of the Act requires that an appropriate relative weight be assigned to each CMG. Relative weights account for the variance in cost per discharge and resource utilization among the payment groups and are a primary element of a case-mix adjusted PPS. The establishment of relative weights helps ensure that beneficiaries have access to care and receive the appropriate services that are commensurate to other beneficiaries that are classified in the same CMG. In addition, prospective payments that are based on relative weights encourage provider efficiency and, hence, help ensure a fair distribution of Medicare payments. Accordingly, as specified in § 412.620(b)(1), we calculate a relative weight for each CMG that is proportional to the resources needed by an average inpatient rehabilitation case in that CMG. For example, cases in a CMG with a relative weight of 2, on average, will cost twice as much as cases in a CMG with a relative weight of 1. We discuss the details of developing the relative weights below.

As indicated in the August 7, 2001 final rule, we believe that the RAND analysis has shown that CMGs based on function-related groups (adjusted for comorbidities) are effective predictors of resource use as measured by proxies such as length of stay and costs. The use of these proxies is necessary in developing the relative weights because data that measure actual nursing and therapy time spent on patient care, and other resource use data, are not available.

e. Overview of Development of the CMG Relative Weights

As indicated in the August 7, 2001 final rule, to calculate the relative weights, we estimate operating (routine and ancillary services) and capital costs of IRFs. For this final rule as we indicated in the FY 2006 proposed rule (70 FR 30188), we use the same method for calculating the cost of a case that we outlined in the August 7, 2001 final (66 FR at 41351 through 43153). We obtained cost-to-charge ratios for ancillary services and per diem costs for routine services from the most recent available cost report data. We then obtain charges from Medicare bill data and derived corresponding functional measures from the FIM data. We omit data from rehabilitation facilities that are classified as all-inclusive providers from the calculation of the relative weights, as well as from the parameters that we use to define transfer cases, because these facilities are paid a single, negotiated rate per discharge and therefore do not maintain a charge structure. For ancillary services, we calculate both operating and capital costs by converting charges from Medicare claims into costs using facility-specific, cost-center specific cost-to-charge ratios obtained from cost reports. Our data analysis for the August 7, 2001 final rule showed that some departmental cost-to-charge ratios were missing or found to be outside a range of statistically valid values. For anesthesiology, a value greater than 10, or less than 0.01, is found not to be statistically valid. For all other cost centers, values greater than 10 or less than 0.5 are found not to be statistically valid. In the August 7, 2001 final rule, we replaced individual cost-to-charge ratios outside of these thresholds. The replacement value that we used for these aberrant cost-to-charge ratios was the mean value of the cost-to-charge ratio for the cost-center within the same type of hospital (either freestanding or unit). For routine services, per diem operating and capital costs are used to develop the relative weights. In addition, per diem operating and capital costs for special care services are used to develop the relative weights. (Special care services are furnished in intensive care units. We note that less than 1 percent of rehabilitation days are spent in intensive care units.) Per diem costs are obtained from each facility's Medicare cost report data. We use per diem costs for routine and special care services because, unlike for ancillary services, we could not obtain cost-to-charge ratios for these services from the cost report data. To estimate the costs for routine and special care services included in developing the relative weights, we sum the product of routine cost per diem and Medicare inpatient days and the product of the special care per diem and the number of Medicare special care days.

In the August 7, 2001 final rule, we used a hospital specific relative value method to calculate relative weights.

For the FY 2006 proposed rule (70 FR 30188) and this final rule, we used the following basic steps to calculate the relative weights as indicated in the August 7, 2001 final rule (at 66 FR 41316, 41351 through 41352).

The first step in calculating the CMG weights is to estimate the effect that comorbidities have on costs. The second step required us to adjust the cost of each Medicare discharge (case) to reflect the effects found in the first step. In the third step, the adjusted costs from the second step were used to calculate ''relative adjusted weights'' in each CMG using the hospital-specific relative value method. The final steps are to calculate the CMG relative weights by modifying the ''relative adjusted weight'' with the effects of the existence of the comorbidity tiers (explained below) and normalizing the weights to 1.

Our methodology for determining the IRF classification system remains unchanged from the August 7, 2001 final rule.

B. Changes to the Existing List of Tier Comorbidities

1. Changes To Remove Codes That Are Not Positively Related to Treatment Costs

While our methodology for this final rule for determining the tiers remains unchanged from the August 7, 2001 final rule, as we indicated in the FY 2006 proposed rule (70 FR 30188), RAND's analysis indicates that 1.6 percent of FY 2003 cases received a tier payment (often in tier one) that was not justified by any higher cost for the case. Therefore, under statutory authority section 1886(j)(2)(C)(i) of the Act, as we proposed in the FY 2006 proposed rule (70 FR 30188) we are implementing several technical changes to the comorbidity tiers associated with the CMGs. Specifically, the RAND analysis found that the first 17 diagnoses shown in Table 1 below are no longer positively related to treatment cost after controlling for CMG. The additional two codes were also problematic. According to RAND, code 410.91 (AMI, NOS, Initial) was not specific enough to be differentiated from other related codes and code 260, Kwashiorkor, was found to be unrealistically represented in the data according to the RAND technical expert panel.

With respect to the eighteenth code in Table One, (410.X1) Specific AMI, initial), we note that RAND found there is no clinical reason to believe that this code differs in a rehabilitation environment from all of the specific codes for initial AMI of the form 410.X1, where X is an numeric digit. In other words, this code is indistinguishable from the seventeenth code in Table One (410.91 AMI, NOS, initial). Following this observation, RAND tested the other initial AMI codes as a single group and found that they have no positive effect on case cost. Thus, as we indicated in the FY 2006 proposed rule (70 FR 30188), we proposed to remove ''AMI, NOS, initial'' from the tier list because it is not positively related to treatment cost after controlling for the CMG. In addition, for similar reasons, we proposed in the FY 2006 proposed rule (70 FR 30188) to remove ''Specific AMI, initial from the tier list since it is indistinguishable from ''AMI, NOS, initial.''

As we proposed in the FY 2006 proposed rule (70 FR 30188), with respect to the last code in Table One (Kwashiorkor), we are removing this code from the tier list as well. This comorbidity is positively related to cost in our data. However, RAND's technical expert panel (TEP) found the large number of cases coded with this rare disease to be unrealistic and recommended that it be removed from the tier list.

Table 1 contains two malnutrition codes, and as we proposed in the FY 2006 proposed rule (70 FR 30188), we are removing these two malnutrition codes. As we stated in the FY 2006 Proposed Rule (70 FR 30188), removal of these codes where use is concentrated in specific hospitals is particularly important because these hospitals are likely receiving unwarrantedly high payments due to the tier one assignment of these cases. Thus, because we believe the excess use of these two comorbid conditions is inappropriate based on the findings of RAND's TEP, they will be removed.

The data indicate large variation in the rate of increase from the 1999 data to the 2003 data across the conditions that make up the tiers. The greatest increases were for miscellaneous throat conditions and malnutrition, each of which were more than 10 times as frequent in 2003 as in 1999. The growth in these two conditions was far larger than for any other condition. Many conditions, however, more than doubled in frequency, including dialysis, cachexia, obesity, and the non-renal complications of diabetes. The condition with the least growth, renal complications of diabetes, may have been affected by improved coding of dialysis.

As we proposed in the FY 2006 proposed rule (70 FR 30188), we are finalizing changes to our initial list of diagnoses that deal with tracheostomy cases. These rare cases were excluded from the pulmonary RIC 15 in the August 7, 2001 final rule. The new data indicate that they are more expensive than other cases in the same CMG in RIC 15, as well as in other RICs. Therefore, we believe the data demonstrate that tracheostomy cases should be added to the tier list for RIC 15 in order to receive a higher payment. Finally, the new data indicate that DX V55.0, ''attention to tracheostomy'' should be part of this condition as these cases were and are as expensive as other tracheostomy cases. Thus, since ''attention to tracheostomy'' is as expensive as other tracheostomy cases, it is logical to group such similar cases together. Therefore, we are finalizing our proposal to remove the RIC 15 exclusion for code V55.0 (attention to tracheostomy) so that code V55.0 can receive appropriate payment for the additional costs it incurs.

As we stated in the FY 2006 proposed rule (70 FR 30188), we believe that the data provided by RAND support the removal of the codes in Table 1 below because they either have no impact on cost after controlling for their CMG or are indistinguishable from other codes or are unrealistically overrepresented. Therefore, we are finalizing our proposed policy to remove these codes from the tier list.

TABLE 1.—LIST OF CODES TO BE REMOVED FROM THE TIER LIST

ICD–9–CM code	Abbreviated code title	Condition
235.1	Unc behav neo oral/phar	Miscellaneous throat conditions.
933.1	Foreign body in larynx	Miscellaneous throat conditions.
934.1	Foreign body bronchus	Miscellaneous throat conditions.
530.0	Achalasia & cardiospasm	Esophegeal conditions.
530.3	Esophageal stricture	Esophageal conditions.
530.6	Acquired esophag diverticulum	Esophageal conditions.

TABLE 1.—LIST OF CODES TO BE REMOVED FROM THE TIER LIST—Continued

ICD–9–CM code	Abbreviated code title	Condition
V46.1*	Dependence on respirator	Ventilator status.
799.4	Cachexia	Cachexia.
V49.75	Status amputation below knee	Amputation of LE.
V49.76	Status amputation above knee	Amputation of LE.
V49.77	Status amputation hip	Amputation of LE.
356.4	Idiopathic progressive polyneuropathy	Meningitis and encephalitis.
250.90	Diabetes II, w unspecified complications, not stated as uncontrolled.	Non-renal complications of diabetes.
250.93	Diabetes I, w unspecified complications, uncontrolled	Non-renal complications of diabetes.
261	Nutritional Marasmus	Malnutrition.
262	Other severe protein calorie deficiency	Malnutrition.
410.91	AMI, NOS, initial	Major comorbidities.
410.X1	Specific AMI, initial	Major comorbidities.
260	Kwashiorkor	Malnutrition.

*V46.11 and V46.12 were not in existence when the data used in the analysis was collected. Since these codes are subcategories of code V46.1 (the code we proposed to remove from the tiers that make additional payment), they will be removed from the comorbidity tiers as well.

We received numerous comments on the proposed changes to the existing list of tier comorbidities which are summarized below:

Comment: One commenter remarked that kwashiorkor should be omitted from the list of comorbidities to be deleted from the list of comorbidities that increase the payment rate of the CMG because some of the software packages used by the industry allow this code to be used for the coding of the inpatient's comorbidities.

Response: We disagree with the commenter. Kwashiorkor is a severe malnutrition of infants and young children, primarily in tropical and subtropical regions, caused by deficiency in the quality and quantity of protein in the diet. It is characterized by anemia, edema, potbelly, loss of pigment in the skin, hair loss or change in hair color, hypoalbuminemia, and bulky stools containing undigested food. In addition, an inpatient with this condition most likely would not be able to receive the three hours of intensive rehabilitation that is a qualifying guideline to be an inpatient within an IRF. While protein deficiencies may be noted in patients within an IRF, by definition, the incidence of Kwashiorkor could not be as high as reported. Also, as previously stated, RAND's TEP reported that the data indicate large variation in the rate of increase across conditions. However, coding of malnutrition increased by more than 10 times, and RAND found the large number of cases coded with this rare disease to be unrealistic and recommended that it be removed from the tier list. Consequently, kwashiorkor will be eliminated from the list of comorbidities that increase the payment rate of the CMG.

Comment: One commenter wrote that code V46.1 is listed in the proposed list of codes to be removed from the tier list. Since this code contains two other codes, the commenter wanted to know if it is our intention to remove both codes in this category, namely V46.11 (Dependence on respirator, status) and V46.12 (Encounter for respirator dependence during power failure) or just one of these codes.

Response: First, we want to explain how codes V46.11 and V46.12 became codes that are used to increase the CMG payment rate. In the August 7, 2001 final rule (66 FR 41316), we published Appendix C that listed the ICD–9–CM comorbid condition codes which are used to increase the CMG payment rate. The ICD–9–CM codes of the comorbid conditions are recorded by the IRF's staff on the IRF–PAI, and that data as well as some other data recorded on the IRF–PAI is used to classify an inpatient into a CMG payment rate. One of the codes we published as part of Appendix C was V46.1. Each year the codes used in the ICD–9–CM coding system undergo a review resulting in updates to some of the existing codes. In accordance with a review that updated the ICD–9–CM coding system V46.11 and V46.12 were added to the ICD–9–CM coding system as subcategories of V46.1. We believe that the comorbid condition represented by the code V46.11 or V46.12 is a derivative of the comorbid condition represented by the code V46.1. Therefore, in 2005 we updated the CMG grouper software which resulted in the CMG payment being increased by the same amount if the IRF–PAI data of an inpatient included codes V46.1, or V46.11, or V46.12.

The analysis that our data contractor performed, using certain data after the IRF PPS was implemented, shows that the comorbid condition represented by code V46.1 does not have an effect upon treatment cost after controlling for the CMG. Therefore, code V46.1 and its derivative codes that comprise it (V46.11 and V46.12) will be removed from the list of codes that are used by the IRF PPS to increase the CMG payment rate.

Comment: Several commenters urged us to consider not removing codes V49.75, V49.76, and V49.77 from the list of comorbidity codes that increase the CMG payment because of concerns with the complexity of a patient with an amputation.

Response: After controlling for the CMG, RAND found that these codes do not impact cost. Further, IRFs do not incur additional costs to treat these comorbidities after controlling for the CMG. This means that the CMG to which the inpatient is assigned, already accounts for the costs associated with the treatment of inpatients with an amputation and no additional payment is needed beyond the CMG amount to adequately reimburse for such a case. Therefore we are removing these codes from the list of comorbidities that increase the CMG payment.

Comment: Several commenters mentioned a concern with the code V497.7 in the table of codes to be removed. They believed it to be a typographical error where the actual code to be removed is V49.77.

Response: We agree with the commenters and have made the correction to the typographical error. The corrected code to be removed is V49.77.

Comment: Several commenters noted that there is a discrepancy with code 428.3 (vocal cord paralysis, not otherwise specified) in CMS' list of

codes being reassigned based on their marginal cost in the *Comorbidity Tier Reassignment Changes* File found at *http://www.cms.hhs.gov/providers/irfpps/fy06nprm.asp*. They stated that it should actually be code 478.30 (vocal cord paralysis, not otherwise specified).

Response: We agree with the commenters and shall make the appropriate corrections to the typographical error within the file.

Comment: Several commenters noted an error with the description of meningitis and encephalitis for code 356.4 in the *Comorbidity Tier Reassignment Changes* File found at *http://www.cms.hhs.gov/providers/irfpps/fy06nprm.asp*.

Response: We agree with the commenters and the description will be amended to read idiopathic progressive polyneuropathy for code 356.4.

Comment: Commenters expressed concern for the removal of codes 530.0 (achalasia and cardiospasm), 530.3 (stricture and stenosis of esophagus) and 530.6 (diverticulum of esophagus) that are used to record esophageal conditions because of costs associated with these conditions and requested that they not be removed from the tier list which increases payment for these comorbidities.

Response: After controlling for the CMG, RAND found that these comorbidities do not positively impact costs, meaning that the CMG encompasses sufficient payment to compensate for these comorbidities. Therefore, we are removing codes 530.0, 530.3 and 530.6 from the list of comorbidities that increase CMG payment.

Comment: Several commenters agreed with CMS' proposed policy to remove malnutrition codes 261 (nutritional marasmus) and 262 (other severe protein-calorie malnutrition), while others opposed the proposed policy to remove these codes. In addition, several commenters suggested that CMS examine the impact of malnutrition on increasing the length of stay within an IRF.

Response: We acknowledge both opinions as expressed by the different commenters. The RAND TEP, and our Medical Officers, believes these codes are drastically overstated and inpatients with these levels of malnutrition would not be candidates for three hours of intensive therapy. In addition, after controlling for the CMG, both of these codes do not positively affect payment. Therefore we believe it is appropriate to remove malnutrition codes 261 and 262 from the list of comorbidity codes that are used to increase the CMG payment rate. Additionally, we will continue to examine the impact of comorbidities, including malnutrition, upon IRF Medicare-covered inpatients.

Comment: One commenter suggested adding codes 250.91 and 250.92 to the list of comorbidities to be removed from the list of codes used to increase payment because they believe those codes to be similar in description to codes 250.90 and 250.93.

Response: Only the first 17 codes within Table 1 were found to have no positive effect on cost after controlling for the CMG. The data analysis performed by RAND does not indicate that at this time 250.91 and 250.93 should be removed from the list of codes used to increase the CMG payment rate because they continue to positively affect costs. Therefore we believe it is inappropriate to remove them from the list of comorbidities that impact cost. Consequently, we are not removing any other codes from the list of codes used to increase the CMG payment rate.

Comment: One commenter recommended that several codes be added to our comorbidity tier system based upon suggestions from the RAND TEP, namely codes 428.0 (congestive heart failure), V43.3 (heart valve replacement), 250.1 (insulin dependent diabetes without mention of complications, not stated as controlled) and 438.2X (hemi-paresis due to an old stroke).

Response: After examining the RAND recommendations, our Medical Officers felt that codes V43.3 and 438.2X were too vague and non-descript to capture the necessary information needed for these codes to be added to the list of codes used to increase the CMG payment rate. However, in response to the comments our Medical Officers re-evaluated the effect on cost by the comorbid condition represented by code 250.1 (insulin dependent diabetes without mention of complications, not stated as controlled). They determined that code 250.1 should be added to the list of codes used to increase the CMG payment rate. They also determined that the code should be a tier 3 code because the other 250 series of codes related to diabetes are in tier 3. Therefore, this code will be added as a tier 3 code to the list of codes used to increase the CMG payment rate. There will be no excluded RICs with code 250.1. After examining the comments, our Medical Officers continue to believe that 428.9 (heart failure, unspecified), was too non-descript and should not be added to the list of codes that can increase payment. However, our Medical Officers agree with the commenter regarding other numerous congestive heart failure codes including Code 428.1—Left Heart Failure, Code 428.20—Systolic Heart Failure Unspecified, Code 428.21—Systolic Heart Failure Acute, Code 428.22—Systolic Heart Failure Chronic, Code 428.23—Systolic Hear Failure Acute on Chronic, Code 428.30—Diastolic Heart Failure Unspecified, Code 428.31—Diastolic Heart Failure Acute, Code 428.32—Diastolic Heart Failure Chronic, Code 428.33—Diastolic Heart Failure Acute on Chronic, Code 428.40—Combined Systolic and Diastolic Heart Failure Unspecified, Code 428.41—Combined Systolic and Diastolic Heart Failure Acute, Code 428.42—Combined Systolic and Diastolic Heart Failure Chronic, and Code 428.43—Combined Systolic and Diastolic Heart Failure Acute on Chronic, largely due to the increased costs associated with these codes. Therefore, these 428 cardiac codes will be added to the list of codes used to increase the CMG payment rate as tier 3 codes because of their similarity to certain cardiac codes with respect to resource utilization. However, these codes will not be used to increase the CMG payment rate if the CMG code is one of the CMG codes derived from RIC 14 (the cardiac RIC) because these cardiac codes costs have been accounted for in the CMGs associated with RIC 14.

Comment: A commenter believes that the CMG payment rate should include an adjustment for mental health problems, such as a depression. The commenter believes that a patient's mental health status has an effect on the patient treatment costs an IRF incurs.

Response: The significance and appropriateness of a patient's state of mental health in response to an impairment that requires a patient to undergo intensive inpatient rehabilitation is a subject that we believe requires further study. Additional study will help to determine the effect of the patient's state of mental health on treatment costs. An ICD–9–CM code may be used to show that a patient is exhibiting signs that a rehabilitation clinician believes indicate a mental disorder. However, quantifying by use of ICD–9–CM codes the association between a patient's state of mental health and how it affects a patient's response to rehabilitation treatment is at best limited. For example, we believe that in response to a stroke or hip fracture, or some other impairment, a situational depression may be a rational response. However, that does not mean that the IRF will incur additional costs that were not already taken into account when the CMG payment rates were developed. In addition, mental disorders vary greatly

in severity as does how a patient's functioning is affected by a mental disorder.

There would have to be multiple factors taken into consideration before any type of mental disorder could be added to the list of comorbidities that would increase payment of the CMG. The data for a complete psychiatric evaluation must be made available to correctly code for these comorbidities. In addition, this is a budget neutral system, and no additional funding will be added to the system. Under our final rule, funds will not be added but simply be redistributed among the comorbidities among the tiers that increase payment. This is because the changes associated with the comorbidity tiers and CMGs are done in a budget neutral manner. On the assumption that there is an even distribution of these psychiatric patients among IRFs, and these patients may receive the redistributed payment, the addition of these codes may not contribute to an increased payment for inpatients with these comorbid conditions and may affectively lower payments for CMG's with other comorbid conditions because the same amount of funding is distributed across more comorbid conditions. Also, few IRFs have psychiatric personnel and rehabilitation doctors rarely have the time required to observe the patient to make a complete psychiatric evaluation and thus some codes may be assigned (or not assigned) in error. In addition, RAND's TEP believed that it would be inappropriate to use ICD–9–CM diagnoses to identify patients with affective disorders. Therefore, in this final rule, we are not adding codes for depression and mental disorders to the list of codes used to increase payment.

Comment: We received comments to both challenge and support the removal of certain comorbidity codes from the tier list including code 799.4 Cachexia, and code 933.1 (foreign body in larynx). Commenters stated that these conditions required more resources, and thus increased treatment costs. The other commenter stated that the CMG already covered these costs.

Response: The data analysis did not show that the comorbid conditions indicated by these codes increased the costs of treating an inpatient with these comobidities after controlling for the CMG because their CMG payment rate covers costs associated with their corresponding treatment. The more recent RAND analysis found that after controlling for the CMG, these comobidities do not impact cost. Therefore, we are removing them from the comorbidity tiers that would increase payment.

Comment: One commenter made a general statement stating that the list of comorbidities that comprise the tiers do not reflect the challenges that contribute to higher costs in the rehabilitation setting.

Response: We disagree with the commenter because the RAND regression analyses show that the comorbid conditions that comprise the tiers positively impact cost and provide additional payments for services not included in the payment associated with the CMG.

Final Decision: In this final rule, we are adopting the proposal to remove the comorbidity tier codes set forth in Table 1 of the FY 2006 proposed rule (70 FR 30188). We are also removing codes V46.11 and V46.12 because they are subcategories of code V46.1, which has been found to have no impact on cost after controlling for the CMG. We are adding several codes that the RAND analyses found to positively impact costs. We chose to add codes 250.1 (insulin dependent diabetes without mention of complications, not stated as controlled), as well as numerous congestive heart failure codes including Code 428.1—Left Heart Failure, Code 428.20—Systolic Heart Failure Unspecified, Code 428.21—Systolic Heart Failure Acute, Code 428.22—Systolic Heart Failure Chronic, Code 428.23—Systolic Heart Failure Acute on Chronic, Code 428.30—Diastolic Heart Failure Unspecified, Code 428.31—Diastolic Heart Failure Acute, Code 428.32—Diastolic Heart Failure Chronic, Code 428.33—Diastolic Heart Failure Acute on Chronic, Code 428.40—Combined Systolic and Diastolic Heart Failure Unspecified, Code 428.41—Combined Systolic and Diastolic Heart Failure Acute, Code 428.42—Combined Systolic and Diastolic Heart Failure Chronic, and Code 428.43—Combined Systolic and Diastolic Heart Failure Acute on Chronic, which our Medical Officers believe were specific enough to be used in our list of codes that are used to increase the CMG payment amount.

2. Changes To Move Dialysis to Tier One

As we proposed in the FY 2006 proposed rule (70 FR 30188), we are finalizing the movement of dialysis from comorbidity tier two to comorbidity tier one, which is the tier associated with the highest payment. The data from the RAND analysis show that patients on dialysis cost more than the tier payment to which dialysis is currently assigned, and should be moved into the highest paid tier because this tier would more closely align payment with the cost of a case. Based on RAND's analysis using 2003 data, a patient with dialysis costs 31 percent more than a non-dialysis patient in the same CMG and with the same other accompanying comorbidities.

Overall, the largest increase in the cost of a condition occurs among patients on dialysis, where the coefficient in the cost regression increases by 93 percent, from 0.1400 to 0.2697. Part of the explanation for the increased coefficient could be that some IRFs had not borne all dialysis costs for their patients in the pre-PPS period, which was the previous data analysis time period(because providers were previously permitted to bill for dialysis separately). It is likely that, in the 1999 data, some IRFs had not borne all dialysis costs for their patients. Because the fraction of cases coded with dialysis increased by 170 percent, it is also likely that improved coding was part of the explanation for the increased coefficient. We believe a 170 percent increase is such a dramatic increase that it would be highly unlikely that in the time periods used for the data analysis, 170 percent more patients needed dialysis when compared to the time period before the implementation of the IRF PPS. We also believe that the improved coding is likely due to the fact that higher costs are associated with dialysis patients, and therefore IRFs, in an effort to ensure that their payments cover these higher expenses better and more carefully coded comorbidities whose presence resulted in higher PPS payments.

Therefore we are moving dialysis patients to comorbidity tier one will more adequately compensate IRFs for the extra cost of those patients and thereby maintain or increase access to these services.

Comment: A number of commenters supported our decision to move dialysis patients to tier one due to the increase cost of dialysis patients.

Response: We agree with these commenters. The data analyses performed by RAND found evidence that suggested that a dialysis patient cost 31 percent more than a non-dialysis patient in the same CMG. Therefore, as proposed in the FY 2006 proposed rule (70 FR 30188), we are moving dialysis to tier 1 because the additional payment associated with tier 1 more closely approximate the additional costs associated with the treatment of an inpatient with this condition.

Final Decision: As proposed in the FY 2006 proposed rule (70 FR 30188), we are adopting the decision to move dialysis patients to comorbidity tier one.

3. Changes To Move Comorbidity Codes Based on Their Marginal Cost

Under section 1886(j)(2)(C)(i) of the Act, as was proposed in the FY 2006 proposed rule (70 FR 30188), we are refining how we pay for a comorbidity based on marginal cost. A commonly understood definition of marginal cost is the increase or decrease in costs as a result of one higher or lower unit of a good or service. In this situation, we are reassigning comorbidities to tiers based on their marginal costs, and by this we mean the increase or decrease in costs as a result of one higher or lower comorbidity tier. Payment for several comorbidities would be more accurate if their tier assignments were changed, and after examining RAND's data, we believe that of the FY 2003 cases, a full 4 percent of cases should be associated with comorbidity tiers that have a lower payment than the comorbidity tiers to which they were assigned. Therefore, comorbidities would be more accurate if their tier assignments were more appropriately based on their marginal costs.

As we proposed in the FY 2006 proposed rule (70 FR 30188), comorbidity tier assignments in this final rule are based on the results of statistical analyses RAND has performed under contract with CMS, using as independent variables only the CMGs and conditions for tiers. As we proposed in the FY 2006 proposed rule (70 FR 30188), tier assignments of each of these conditions for the final rule are determined based on the magnitude of their coefficients in RAND's statistical analysis.

We believe the IRF PPS led to substantial changes in coding of comorbidities between 1999 (pre-implementation of the IRF PPS) and 2003 (post-implementation of the IRF PPS). The percentage of cases with one or more comorbidities increased from 16.79 percent according to the data used to define the comorbidity tiers (1998 through 1999) to 25.51 percent in FY 2003. This is an increase of 52 percent in tier incidence ($52 = 100 \times (25.51 - 16.79)/16.79$). The recording of a tier one comorbidity, the highest paid of the tiers, almost quadrupled during this same time period. Although, improved coding likely increased the recording of comorbidities, those coding the comorbidities may have been motivated by the objective to use coding changes as a means to increase the CMG payment.

The 2003 data provides an excellent comprehensive picture of the costs that are associated with each of the comorbidities. We believe this because CMS has data for 100 percent of the Medicare-covered IRF cases. Therefore, as we indicated in the FY 2006 proposed rule, we believe that using the 2003 data to assign the comorbidities to a payment tier ensures heightened accuracy with respect to the matching of payments to relative costs of a case.

We received several comments on the proposed changes to the existing list identifying which tier is associated with a particular comorbidity. The public comments are summarized below.

Comment: One commenter suggested that we postpone reassigning comorbidity tiers based on their marginal costs, and again instead perform the data analysis used to reassign the comorbidity codes based on marginal costs using more current data.

Response: This final rule reflects the most recent analysis of data. In the future, we will continue to perform data analyses and, as necessary, adjust the payment rates to achieve the most accurate payment. In this final rule, we are adopting the policy we proposed in the FY 2006 proposed rule (70 FR 30188), and reassigning comorbidities to tiers based on their marginal cost because we believe that this reassignment is based on the best comprehensive post-PPS implementation data that are available at this time.

Comment: One commenter recommended that we not reassign any comorbidity codes based on their marginal costs under the premise that there is no concrete evidence of upcoding.

Response: Taking into consideration that we believe that there has been improved coding due to prospective payment based system, the recommendations of RAND's technical expert panel, and the guidance of our Medical Officers, we believe that the comorbidity codes should be assigned based on their marginal costs in order to increase the association between costs and payment.

Final Decision: In summary, we are adopting all of the proposals set forth in the FY 2006 proposed rule (70 FR 30188), with regard to the removal of the list of codes from comorbidity tiers that increase payment, the movement of dialysis patients to tier one, the code V55.0 will no longer be excluded from RIC 15, and comorbidity codes will now be reassigned based on their marginal costs.

C. Changes to the CMGs

Section 1886(j)(2)(C)(i) of the Act requires the Secretary from time to time to adjust the classifications and weighting factors of patients under the IRF PPS to reflect changes in treatment patterns, technology, case mix, number of payment units for which payment is made, and other factors that may affect the relative use of resources. These adjustments shall be made in a manner so that changes in aggregate payments under the classification system are the result of real changes and not the result of changes in coding that are unrelated to real changes in case mix.

In the FY 2006 proposed rule (70 FR 30188, 30196), in accordance with section 1886(j)(2)(C)(i) of the Act and as specified in § 412.620(c) and based on the research conducted by RAND, we proposed to update the CMGs used to classify IRF patients for purposes of establishing payment amounts. We also proposed to update the relative weights associated with the payment groups based on FY 2003 Medicare bill and patient assessment data. We proposed replacing the current unweighted motor score index used to assign patients to CMGs with a weighted motor score index that would improve our ability to accurately predict the costs of caring for IRF patients, as described in detail below. However, we proposed not to change the methodology for computing the cognitive score index.

As described in the August 7, 2001 final rule, we contracted with RAND to analyze IRF data to support our efforts in developing our patient classification system and the IRF PPS. We continued our contract with RAND to support us in developing potential refinements to the classification system and the PPS. As part of this research, we asked RAND to examine possible refinements to the CMGs to identify potential improvements in the alignment between Medicare payments and actual IRF costs. In conducting its research, RAND used a technical expert panel (TEP) made up of experts from industry groups, other government entities, academia, and other interested parties. The technical expert panel reviewed RAND's methodologies and advised RAND on many technical issues.

Several recent developments make significant improvements in the alignment between Medicare payments and actual IRF costs possible. First, when the IRF PPS was implemented in 2002, a new assessment instrument was used to collect patient data, the IRF Patient Assessment Instrument (IRF–PAI). The new instrument contained items that improved the quality of the patient-level information available to researchers.

Second, more recent data are available on a larger patient population. Until now, the design of the IRF PPS was based entirely on 1999 data on Medicare

rehabilitation patients from just a sample of hospitals (the best available data at the time). Now, we have post-PPS data from 2002 and 2003 that describe the entire universe of Medicare-covered rehabilitation patients.

Finally, we believe that improvements in the algorithms that produced the initial CMGs, as described below, should lead to new CMGs that better predict treatment costs in the IRF PPS.

Using the inpatient rehabilitation facility assessment instrument before the PPS, which is commonly referred to as the FIM, and Medicare data from 1998 and 1999, RAND helped us develop the original structure of the IRF PPS. IRFs became subject to the PPS beginning with cost reporting periods starting on or after January 1, 2002. The PPS is based on assigning patients to particular CMGs that are designed to predict the costs of treating particular Medicare patients according to how well they function in four general categories: Transfers, sphincter control, self-care (for example, grooming, eating), and locomotion. Patient functioning is measured according to 18 categories of activity: 13 motor tasks, such as putting on clothing, and 5 cognitive tasks, such as memory. The PPS is intended to align payments to IRFs as closely as possible with the actual costs of treating patients. If the PPS ''underpays'' for some kinds of care, IRFs have incentives to limit access for patients requiring that kind of care because payments for a particular case would be less than the costs of providing care, so an IRF may try to limit its financial ''losses''; conversely, if the PPS overpays, resources are wasted because IRFs' payments exceed the costs of providing care for a particular case.

The fiscal year 2003 data file currently available for refining the CMGs contains many more IRF cases and represents the universe of Medicare-covered IRF cases, rather than a sample. The best available data that CMS and RAND had for analysis in 1999 contained 390,048 IRF cases, representing 64 percent of all Medicare-covered patients in participating IRFs. The more recent data contain 523,338 IRF cases (fiscal year 2003), representing all Medicare-covered patients in participating IRFs. The larger file enables RAND to obtain greater precision in the analysis and portrays a more recent and complete picture of patients under the IRF PPS.

Also, the fiscal year 2003 data include more detailed information about patients' level of functioning. For example, new variables are included in the more recent data that provide further details on patient functioning. Standard bowel and bladder scores on the FIM instrument (used to assess patients before the IRF PPS), for example, measured some combination of the level of assistance required and the frequency of accidents (that is, soiling of clothes and surroundings). New variables on the IRF–PAI instrument measure the level and the frequency separately. Since measures of the level of assistance required and the frequency of accidents contain slightly different information about the expected costliness of an IRF patient, having measures for these two variables separately provides additional information to researchers.

Furthermore, additional optional information is recorded on the health status of patients in the more recent data (for example, shortness of breath, presence of ulcers, inability to balance).

1. Changes for Updating the CMGs

In the FY 2006 proposed rule (70 FR 30188), we proposed to revise the definitions of the CMGs based on regression analysis by RAND of the FY 2003 data. As described in the August 7, 2001 final rule, RAND developed the original list of CMGs using FIM data from 1998 and 1999 (see the FY 2006 proposed rule (70 FR 30188, 30198 through 30202) for a table of the original CMG listing).

Given the availability of more recent, post-PPS data, we asked RAND to examine possible refinements to the CMGs to identify potential improvements in the alignment between Medicare payments and actual IRF costs. In addition to analyzing fiscal year 2003 data, RAND also convened a TEP, made up of researchers from industry, provider organizations, government, and academia, to provide support and guidance through the process of developing possible refinements to the PPS. Members of the TEP reviewed drafts of RAND's reports, offered suggestions for additional analyses, and provided clinicians' views of the importance and significance of various findings.

As we explained in the FY 2006 proposed rule (70 FR 30188), RAND's analysis of the FY 2003 data, along with the support and guidance of the TEP, strongly suggested the need to update the CMGs to better align payments with costs under the IRF PPS. The other option we considered before proposing to update the CMGs with the fiscal year 2003 data was to maintain the same CMG structure but recalculate the relative weights for the current CMGs using the 2003 data. After carefully reviewing the results of RAND's regression analysis, which compared the predictive ability of the CMGs under 3 scenarios (not updating the CMGs or the relative weights, updating only the relative weights and not the CMGs, and updating both the relative weights and the CMGs), as we stated in the FY 2006 proposed rule (70 FR 30188), we believed and continue to believe (based on RAND's analysis) that updating both the relative weights and the CMGs will allow the classification system to do a better job of reflecting changes in treatment patterns, technology, case mix, and other factors which may affect the relative use of resources.

We continue to believe it is appropriate to update both the CMGs and the relative weights at this time because the 2003 data we now have represent a more recent and broader set of data elements. The more recent data include all Medicare-covered IRF cases rather than a subset, allowing us to base the CMG changes on a complete picture of the types of patients in IRFs. In designing the IRF PPS, we used the best available data, but those data may not have contained a complete picture of the types of patients in IRFs. Also, the improved clinical coding of patient conditions in IRFs is better reflected in the more recent data than it was in the best available data we had to design the IRF PPS. In addition, changes in treatment patterns, technology, case mix, and other factors affecting the relative use of resources in IRFs since the IRF PPS was implemented likely require an update to the classification system.

Prior to the finalization of the proposed changes contained in this final rule, we paid IRFs based on 95 CMGs and 5 special CMGs developed using the CART algorithm applied to 1999 data. The CART algorithm that was used in designing the IRF PPS assigned patients to RICs according to their age and their motor and cognitive FIM scores. CART produced the partitions so that the reported wage-adjusted rehabilitation cost of the patients was relatively constant within partitions. Then, a subjective decision-making process was used to decrease the number of CMGs (to ensure that the payment system did not become unduly complicated), to enforce certain constraints on the CMGs (to ensure that, for instance, IRFs were not paid more for patients who had fewer comorbidities than for patients with more comorbidities), and to fit the comorbidity tiers. Although the use of a subjective decision-making process (rather than a computer algorithm) was very useful, there were limitations. For example, it made it difficult to explore

the implications of variations to the CART models because an individual person is not able to examine as many variations of a model in as short a period of time as a computer program. Furthermore, the computer is more efficient at accounting for all of the possible combinations and interactions between important variables that affect patient costs.

In analyzing potential refinements to the IRF PPS, RAND created a new algorithm that would be very useful in constructing the CMGs (the new algorithm would be based on the CART methodology described in detail in section V.A.2.b of this final rule). RAND applied the new algorithm to the fiscal year 2003 IRF data. In the FY 2006 proposed rule (70 FR 30188), we proposed to use RAND's new algorithm for refinements to the CMGs. The algorithm is based entirely on an iterative computerized process to decrease the number of CMGs, enforce constraints on the CMGs, and assign the comorbidity tiers. At each step in the process, the new CART algorithm produces all of the possible combinations of CMGs using all available variables. It then selects the variables and the CMG constructions that offer the best predictive ability, as measured by the greatest decrease in the mean-squared error. We proposed to place the following constraints on the algorithm, based on RAND's analysis: (1) Neighboring CMGs would have to differ by at least $1,500, unless eliminating the CMG would change the estimated costs of patients in that CMG by more than $1,000; (2) estimated costs for patients with lower motor or cognitive index scores (more functionally dependent) would always have to be higher than estimated costs for patients with higher motor or cognitive index scores (less functionally dependent). We believe that the PPS should not pay more for a patient who is less functionally dependent than for one who is more functionally dependent; and (3) each CMG must contain at least 50 observations (for statistical validity).

RAND's technical expert panel, which included representatives from industry groups, other government entities, academia, and other researchers, reviewed and commented on these constraints and the rest of RAND's proposed methodology (developed based on RAND's analysis of the data) for updating the CMGs as RAND developed the improvements to the CART methodology.

The following are the most substantial differences between the CMGs used prior to October 1, 2005 and the proposed new CMGs for FY 2006:

- Fewer CMGs than before (87 now compared with 95 in the prior system). The 5 special CMGs for very short stay cases and cases in which the patient expires would remain unchanged.
- The number of CMGs under the RIC for stroke patients (RIC 1) would decrease from 14 to 10.
- The cognitive index score would affect patient classification in two of the RICs (RICs 1 and 2), whereas it previously affected RICs 1, 2, 5, 8, 12, and 18.
- A patient's age would now affect assignment for CMGs in RICs 1, 4, and 8, whereas it previously affected assignment for CMGs in RICs 1 and 4.

The primary objective in updating the CMGs is to better align IRF payments with the costs of caring for IRF patients, given more recent information. This requires that we improve the ability of the system to predict patient costs. RAND's analysis suggests that the proposed new CMGs clearly improve the ability of the payment system to predict patient costs. The proposed new CMGs would greatly improve the explanation of variance in the system.

Public comments and our responses on the proposed changes for updating the CMGs are summarized below.

Comment: Several commenters raised concerns that the FY 2003 data used to update the CMGs did not reflect the full enforcement of the 75 percent rule and that CMS should, therefore, wait until the data reflect full enforcement before making any changes to the CMGs.

Response: We agree that additional changes to the CMGs may potentially be necessary in the future if enforcement of the 75 percent rule results in substantial changes to IRFs' patient populations. However, we believe it is now appropriate to begin refining the system because several recent developments make significant improvements in the alignment between Medicare payments and actual IRF costs possible. First, when the IRF PPS was implemented for cost reporting periods beginning on or after January 1, 2002, a new recording instrument called the IRF–PAI was used to collect patient data. The new instrument contained questions that improved the quality of the patient-level information available to researchers. The 2003 data used in the proposed refinements reflects this data.

Second, more recent data are available on a larger patient population. Until now, the design of the IRF PPS was based entirely on 1999 data on Medicare rehabilitation patients from just a sample of hospitals. Even though this was the best available data at the time, we now have post-PPS data from 2002 and 2003 that describe the entire universe of Medicare-covered rehabilitation patients.

Finally, we believe that proposed improvements in the algorithms that produced the initial CMGs, as described above, lead to new CMGs that better predict treatment costs in the IRF PPS.

We further note that making refinements to the IRF patient classification system now, based on post-PPS data, does not preclude us from making future refinements to the system if IRFs' case mix and care practices change over time. We will continue to monitor the IRF PPS, and make refinements as needed, to ensure that IRF payments are aligned as closely as possible with the costs of providing care.

Comment: One commenter believed that the proposed changes to the CMGs would make IRF quality measurement more difficult over time because the proposed changes to the CMG definitions would mean that a case classified into a particular CMG (such as CMG 0107) before October 1, 2005 (when the proposed changes would be implemented) would not necessarily be classified into CMG 0107 after October 1, 2005. Thus, people attempting to create a one-for-one crosswalk between the CMGs before October 1, 2005 and the proposed CMGs after October 1, 2005 would be unable to do so. The commenter noted that many quality measurement tools currently being used by IRFs require such a one-for-one crosswalk.

Response: We recognize the importance of monitoring IRF quality of care over time. However, we do not believe that the proposed changes to the CMGs inhibit the ability to monitor quality in IRFs over time. Quality of care is not measured by a payment rate, but by data reflecting various indicators of the treatment patients receive. In the FY 2006 proposed rule (70 FR 30188), we did not propose changes to the patient assessment form itself or changes to the coding of the underlying data that is used to classify patients into CMGs. Therefore, comparisons of the underlying patient classification data could still be used to monitor quality in these facilities over time.

Comment: One commenter expressed concerns that the cognitive scores are not used as often in the definitions of the proposed revisions to the CMGs as they were in the original CMGs defined in the August 7, 2001 final rule. This commenter stated that the cognitive scores are important predictors of how costly patients are likely to be in the IRF setting. The commenter also stated that,

if cognitive scores are not used as often as motor scores for assigning patients to CMGs, the reason may be that measures of patients' cognitive abilities may not currently be as well developed as measures of patients' motor abilities. Therefore, this commenter recommended that we develop more sensitive measures that have better predictive qualities.

Response: As we noted previously, the cognitive score used to classify IRF patients into CMGs is made up of cognitive items from the IRF–PAI. These cognitive items are generally indications of the patient's mental functioning level, and are related to the patient's ability to process and respond to empirical factual information, use judgment, and accurately perceive what is happening. Patients' cognitive functioning clearly affects their expected costliness in an IRF. However, RAND's regression analysis, in which they explored the relationship of the FIM motor and cognitive scores to cost, showed that patients' cognitive scores generally did not predict patients' expected costliness above and beyond what patients' motor scores already were able to predict. Thus, we see no reason to use cognitive scores in CMG definitions for which they do not add predictive ability. When the cognitive scores add information that increases the predictive ability of the classification system, we make use of this information in the CMG assignment.

We agree with one of the commenter's points that the cognitive score may not predict costs as well as the motor score because the cognitive items may not be as sensitive to patients' cognitive status as the motor items are to patients' physical functioning. We further agree with the commenter that more work could be done to better identify measures of cognitive functioning. Along these lines, CMS has awarded a contract to the Research Triangle Institute (RTI) to perform research and data analysis to support possible changes to the IRF–PAI instrument that would better capture physical and cognitive functioning information on IRF patients. CMS remains open to examining well-constructed peer-reviewed studies by other types of providers, researchers, and other interested parties in order to improve upon the cognitive assessment functioning measures for the Medicare population. Until then, we will use the best cognitive functioning information available for IRF patients to classify patients into the most appropriate CMGs so IRF payments align as closely as possible with the costs of care in IRFs.

Final Decision: After carefully considering all the comments we received on the proposed changes to the CMG definitions, we are finalizing our decision to adopt the CMG definitions presented below in Table 2. Based on RAND's regression analysis of FY 2003 data, the best data available for analysis, we believe these changes will increase the accuracy of IRF PPS payments.

TABLE 2.—CASE MIX GROUPS (CMGS), WITH THE ASSOCIATED REHABILITATION IMPAIRMENT CATEGORIES (RICS)

[Beginning with discharges on or after October 1, 2005]

RIC	CMG No.	CMG description
01 Stroke (Stroke)	0101	Motor >51.05.
	0102	Motor >44.45 & Motor <51.05 & Cognitive >18.5.
	0103	Motor >44.45 & Motor <51.05 & Cognitive <18.5.
01 Stroke (Stroke)	0104	Motor >38.85 & Motor <44.45.
	0105	Motor >34.25 & Motor <38.85.
	0106	Motor >30.05 & Motor <34.25.
	0107	Motor >26.15 & Motor <30.05.
	0108	Motor <26.15 & Age >84.5.
	0109	Motor >22.35 & Motor <26.15 & Age <84.5.
	0110	Motor <22.35 & Age <84.5.
02 Traumatic brain injury (TBI)	0201	Motor >53.35 & Cognitive >23.5.
	0202	Motor >44.25 & Motor <53.35 & Cognitive >23.5.
	0203	Motor >44.25 & Cognitive <23.5.
	0204	Motor >40.65 & Motor <44.25.
	0205	Motor >28.75 & Motor <40.65.
	0206	Motor >22.05 & Motor <28.75.
	0207	Motor <22.05.
03 Nontraumatic brain injury (NTBI)	0301	Motor >41.05.
	0302	Motor >35.05 & Motor <41.05.
	0303	Motor >26.15 & Motor <35.05.
	0304	Motor <26.15.
04 Traumatic spinal cord injury (TSCI)	0401	Motor >48.45.
	0402	Motor >30.35 & Motor <48.45.
	0403	Motor >16.05 & Motor <30.35.
	0404	Motor <16.05 & Age >63.5.
	0405	Motor <16.05 & Age <63.5.
05 Nontraumatic spinal cord injury (NTSCI)	0501	Motor >51.35.
05 Nontraumatic spinal cord injury (NTSCI)	0502	Motor >40.15 & Motor <51.35.
	0503	Motor >31.25 & Motor <40.15.
	0504	Motor >29.25 & Motor <31.25.
	0505	Motor >23.75 & Motor <29.25.
	0506	Motor <23.75.
06 Neurological (Neuro)	0601	Motor >47.75.
	0602	Motor >37.35 & Motor <47.75.
	0603	Motor >25.85 & Motor <37.35.
	0604	Motor <25.85.
07 Fracture of LE (FracLE)	0701	Motor >42.15.
	0702	Motor >34.15 & Motor <42.15.
	0703	Motor >28.15 & Motor <34.15.
	0704	Motor <28.15.
08 Replacement of LE joint (RepLE)	0801	Motor >49.55.

TABLE 2.—CASE MIX GROUPS (CMGS), WITH THE ASSOCIATED REHABILITATION IMPAIRMENT CATEGORIES (RICS)—Continued

[Beginning with discharges on or after October 1, 2005]

RIC	CMG No.	CMG description
	0802	Motor >37.05 & Motor <49.55.
	0803	Motor >28.65 & Motor <37.05 & Age >83.5.
	0804	Motor >28.65 & Motor <37.05 & Age <83.5.
	0805	Motor >22.05 & Motor <28.65.
	0806	Motor <22.05.
09 Other orthopedic(Ortho)	0901	Motor >44.75.
	0902	Motor >34.35 & Motor <44.75.
	0903	Motor >24.15 & Motor <34.35.
	0904	Motor <24.15.
10 Amputation, lower extremity (AMPLE)	1001	Motor >47.65.
	1002	Motor >36.25 & Motor <47.65.
	1003	Motor <36.25.
11 Amputation, other (AMP–NLE)	1101	Motor >36.35.
11 Amputation, other (AMP–NLE)	1102	Motor <36.35.
12 Osteoarthritis (OsteoA)	1201	Motor >37.65.
	1202	Motor >30.75 & Motor <37.65.
	1203	Motor <30.75.
13 Rheumatoid, other arthritis (RheumA)	1301	Motor >36.35.
	1302	Motor >26.15 & Motor <36.35.
	1303	Motor <26.15.
14 Cardiac (Cardiac)	1401	Motor >48.85.
	1402	Motor >38.55 & Motor <48.85.
	1403	Motor >31.15 & Motor <38.55.
	1404	Motor <31.15.
15 Pulmonary (Pulmonary)	1501	Motor >49.25.
	1502	Motor >39.05 & Motor <49.25.
	1503	Motor >29.15 & Motor <39.05.
	1504	Motor <29.15.
16 Pain Syndrome (Pain)	1601	Motor >37.15.
	1602	Motor >26.75 & Motor <37.15.
	1603	Motor <26.75.
17 Major multiple trauma, no brain injury or spinal cord injury (MMT-NBSCI).	1701	Motor >39.25.
	1702	Motor >31.05 & Motor <39.25.
	1703	Motor >25.55 & Motor <31.05.
	1704	Motor <25.55.
18 Major multiple trauma, with brain or spinal cord injury (MMT–BSCI).	1801	Motor >40.85.
	1802	Motor >23.05 & Motor <40.85.
	1803	Motor <23.05.
19 Guillian Barre (GB)	1901	Motor >35.95.
19 Guillian Barre (GB	1902	Motor >18.05 & Motor <35.95
	1903	Motor <18.05.
20 Miscellaneous (Misc)	2001	Motor >49.15.
	2002	Motor >38.75 & Motor <49.15.
	2003	Motor >27.85 & Motor <38.75.
	2004	Motor <27.85.
21 Burns (Burns)	2101	Motor >0.
Special CMGs	5001	Short-stay cases, length of stay is 3 days or fewer.
	5101	Expired, orthopedic, length of stay is 13 days or fewer.
	5102	Expired, orthopedic, length of stay is 14 days or more.
	5103	Expired, not orthopedic, length of stay is 15 days or fewer.
	5104	Expired, not orthopedic, length of stay is 16 days or more.

Note: CMG definitions use weighted motor scores, as defined below.

2. Use of a Weighted Motor Score Index and Change to the Treatment of Unobserved Transfer to Toilet Values

In the FY 2006 proposed rule (70 FR 30188, 30210), we proposed to use a weighted motor score index in assigning patients to CMGs, instead of the motor score index previously used that treated all components equally. We also proposed to change how the IRF PPS GROUPER software would assign a value for the transfer-to-toilet item when it is coded by the provider with a 0. We proposed that the software would assign this item a value of 2 instead of a 1 when the activity is coded by the provider with a 0. However, we proposed not to change the cognitive score index. As described in detail below, we continue to believe that a weighted motor score index, with the change to the scoring of the transfer to toilet item when the provider records a 0 value for the activity on the IRF–PAI, will improve the classification of patients into CMGs, which in turn will improve the accuracy of payments to IRFs.

To classify a patient into a CMG, IRFs use the admission assessment data from the IRF–PAI to score a patient's functional independence measures. The

functional independence measures consist of what are termed ''motor'' items and ''cognitive'' items. In addition to the functional independence measures, the patient's age may also influence the patient's CMG classification. The motor items are generally indications of the patient's physical functioning level. The cognitive items are generally indications of the patient's mental functioning level, and are related to the patient's ability to process and respond to empirical factual information, use judgment, and accurately perceive what is happening. The motor items are eating, grooming, bathing, dressing upper body, dressing lower body, toileting, bladder management, bowel management, transfer to bed/chair/wheelchair, transfer to toilet, transfer to tub or shower, walking or wheelchair use, and stair climbing. The cognitive items are comprehension, expression, social interaction, problem solving, and memory. (The CMS IRF–PAI manual includes more information on these items.) Each item is generally recorded on the IRF–PAI and scored on a scale of 0 to 7, with a 7 indicating complete independence in this area of functioning, a 1 indicating that a patient is very impaired in this area of functioning, and a 0 indicating that the activity did not occur.

As explained in the August 7, 2001 final rule (66 FR 41349), the instructions for the IRF–PAI required that providers record an 8 for an item to indicate that the activity did not occur, as opposed to a 1 through 7 indicating that the activity occurred and the estimated level of function connected with that activity. However, when the IRF–PAI form was finalized, the code 8 had been removed and was replaced with the code 0. Therefore, facilities now record a 0 when an activity does not occur.

To determine the appropriate payment for patients for whom an activity is coded as 0 (that is, the activity did not occur), we needed to decide an appropriate way of changing the 0 to another code for which payment could be assigned. As discussed in the August 7, 2001 final rule (66 FR at 41349), for purposes of classifying patients into CMGs, we decided to assign a code of 1 (indicating that the patient needed ''total assistance'') whenever a code of 0 appeared for one of the items on the IRF–PAI used to determine payment. This was the most conservative approach we could have taken based on the best available data at the time because a value of 1 indicates that the patient needed total assistance performing the task. The result of recoding a 0 as a 1 and using that value to classify a patient into a CMG is that the provider might receive a higher payment for that item (although it might not be the highest payment overall, depending on the patient's other functional abilities and/or comorbidities).

In the FY 2006 proposed rule (70 FR 30188), we proposed to change the way we treat a code of 0 on the IRF–PAI for the transfer to toilet item. This is the only item that we proposed to change at this time because RAND's regression analysis demonstrated that, of all the motor score values, the evidence supporting a change in the motor score values was the strongest with respect to this item. We proposed to assign a code of 2, instead of a code of 1, to patients for whom a 0 is recorded on the IRF–PAI for the transfer to toilet item (as discussed below) because RAND's analysis of calendar year 2002 and FY 2003 data indicates that patients for whom a 0 is recorded are more similar in terms of their characteristics and costliness to patients with a recorded score of 2 than to patients with a recorded score of 1. We proposed to make this change to provide the most accurate payment for each patient.

Using regression analysis on the calendar year 2002 and FY 2003 data, which is more complete and provides more detailed information on patients' functional abilities than the FY 1999 data used to construct the IRF PPS (even though the 1999 data were the best available data at the time), RAND analyzed whether the assignment of 1 to items for which a 0 is recorded on the IRF–PAI continues to correctly assign payments based on patients' expected costliness. RAND examined all of the items in the motor score index, focusing on how often a code of 0 appears for the item, how similar patients with a code of 0 are to other patients with the same characteristics that have a score of 1 though 7, and how much a change in the item's score affects the prediction of a patient's expected costliness. Based on RAND's regression analysis, we believed and continue to believe it is appropriate to change the assignment of 0 on the transfer to toilet item from a 1 to a 2 for the purposes of determining IRF payments.

Until now, the IRF PPS has used standard motor and cognitive scores, the sum of either 12 or 13 motor items and the sum of 5 cognitive items, to assign patients to CMGs. This summing equally weights the components of the indices. These indices have been accepted and used for many years. Although the weighted motor score is an option that has been considered before, most experts believed that the data were not complete and accurate enough before the IRF PPS (although they were the most complete and accurate data available at the time). Now, it is believed that the data are complete and accurate enough to support using a weighted motor score index.

In developing candidate indices that would weight the items in the score, RAND had the following competing goals: developing indices that would increase the predictive power of the system while at the same time maintaining simplicity and transparency in the payment system. For example, RAND found that an ''optimal'' weighting methodology from the standpoint of predictive power would require computing 378 different weights (18 different weights for the motor and cognitive indices that could all differ across 21 RICs). Rather than introduce this level of complexity to the system, RAND decided to explore simpler weighting methodologies that would still increase the predictive power of the system.

RAND used regression analysis to explore the relationship of the FIM motor and cognitive scores to cost. The idea of these models was to determine the impact of each of the FIM items on cost and then weight each item in the index according to its relative impact on cost. Based on the regression analysis, RAND was able to design a weighting methodology for the motor score that could potentially be applied uniformly across all RICs.

RAND assessed different weighting methodologies for both the motor score index and the cognitive score index. They discovered that weighting the motor score index improved the predictive ability of the system, whereas weighting the cognitive score index did not. Furthermore, the cognitive score index has never had much of an effect (in some RICs, it has no effect) on the assignment of patients to CMGs because the motor score tends to be much stronger at predicting a patient's expected costs in an IRF than the cognitive score.

For these reasons, we proposed a weighting methodology for the motor score index. We proposed to continue using the same methodology we have been using since the IRF PPS was first implemented to compute the cognitive score index (that is, summing the components of the index) because, among other things, a change in methodology for calculating this component of the system failed to improve the accuracy of the IRF PPS payments. Therefore, it would be futile to expend resources on changing this

method when it would not benefit the program.

Table 3 below shows the optimal weights from the regression analysis for the components of the motor score, averaged across all RICs and normalized to sum to 100.0, obtained through the regression analysis. The weights relate to the FIM items' relative ability to predict treatment costs. Table 3 indicates that dressing lower, toilet, bathing, and eating are the most effective self-care items for predicting costs; bowel and bladder control may not be effective at predicting costs; and that the items grouped in the transfer and locomotion categories might be somewhat more effective at predicting costs than the other categories.

We are making no changes to Table 3, which was Table 5 in the FY 2006 proposed rule (70 FR 30188, 30211).

TABLE 3.–OPTIMAL WEIGHTS, AVERAGED ACROSS REHABILITATION IMPAIRMENT CATEGORIES (RICS)

[Motor Items]

Item type	Functional independence item	Average optimal weight
Self	Dressing lower	1.4
Self	Toilet	1.2
Self	Bathing	0.9
Self	Eating	0.6
Self	Dressing upper	0.2
Self	Grooming	0.2
Sphincter	Bladder	0.5
Sphincter	Bowel	0.2
Transfer	Transfer to bed	2.2
Transfer	Transfer to toilet	1.4
Transfer	Transfer to tub	([1])
Locomotion	Walking	1.6
Locomotion	Stairs	1.6

[1] Not included.

Based on RAND's analysis, we considered a number of different candidate indices before we proposed using a weighted index. We considered defining some simple combinations of the four item types that make up the motor score index and assigning weights to the groups of items instead of to the individual items. For example, we considered summing the three transfer items together to form a group with a weight of two, since they contributed about twice as much in the cost regression as the self-care items. We also considered assigning the self-care items a weight of one and the bladder and bowel items as a group a weight close to zero, since they contributed little to predicting cost in the regression analysis. We tried a number of variations and combinations of this, but RAND's TEP generally rejected these weighting schemes. They believed that introducing elements of subjectivity into the development of the weighting scheme may invite controversy, and that it is better to use an objective algorithm to derive the appropriate weights. We agree that an objective weighting scheme is best because it is based on regression analysis of the amount that various components of the motor score index contribute to predicting patient costs, using the best available data we have. Therefore, we proposed to use a weighting scheme that applies the average optimal weights. To develop the weighting scheme, RAND used regression analysis to estimate the relative contribution of each item to the prediction of costs. Based on this analysis, we proposed the weighting scheme indicated in Table 3 above and in the following simple equation:

Motor score index = 1.4*dressing lower + 1.2*toilet + 0.9*bathing + 0.6*eating + 0.2*dressing upper + 0.2*grooming + 0.5*bladder + 0.2*bowel + 2.2*transfer to bed + 1.4*transfer to toilet + 1.6*walking + 1.6*stairs.

Another reason we proposed to use a weighted motor score index to assign patients to CMGs is that RAND's regression analysis showed that it predicts costs better than the current unweighted motor score index. Across all 21 RICs, the proposed weighted motor score index improves the explanation of variance within each RIC by 9.5 percent, on average.

Public comments and our responses on the proposal to use a weighted motor score index and to change the treatment of unobserved transfer to toilet values are summarized below.

Comment: One commenter suggested that the optimal weights for the bladder and bowel items may be too low because incontinence is the most cited reason patients receive inpatient post-acute care.

Response: We believe that the weights for the bladder and bowel items are appropriate since they were determined based on regression analysis of the effects of these items on the prediction of IRF costs. The purpose of the optimal weights for the proposed weighted motor score index is not to indicate the reasons patients receive inpatient post-acute care but rather to estimate the influence of various motor score items on the expected costs of treating patients in the IRF setting. While we do not disagree that incontinence may be a significant reason that many patients receive post-acute care in an inpatient setting, the optimal weights described above were obtained from RAND's regression analysis of the functional items on patient costs using FY 2003 data.

Comment: Several commenters were concerned that the proposed weighted motor score is complex, creates added costs for providers, will require retraining of staff, is not sensitive to differences among RICs, and that RAND's technical expert panel did not support the weighting methodology.

Response: We proposed a weighted motor score index because RAND's analysis indicates that a weighted motor score index will improve the classification of patients into CMGs, which in turn will improve the accuracy of payments to IRFs.

As we stated earlier, in developing candidate indices that would weight the items in the score, RAND had competing goals: To develop indices that would increase the predictive power of the system while at the same

time maintaining simplicity and transparency in the payment system. For example, they found that an ''optimal'' weighting methodology from the standpoint of predictive power would require computing 378 different weights (18 different weights for the motor and cognitive indices that could all differ across 21 RICs). Although this would have made the score more sensitive to differences among RICs, as the commenter requested, it would have made the score substantially more complex and less transparent. Thus, we proposed a weighting methodology that balances these two competing goals.

With regard to the commenter's statement regarding the lack of support for the weighting methodology, RAND's technical expert panel generally endorsed the particular weighting methodology we proposed to implement. Furthermore, in the technical expert panel's discussions, participants told RAND that the weighting methodology would not be difficult for providers to implement. They stated that providers typically have software that computes the motor score, and that software would only require slight modifications to accommodate the new weighting methodology. Staff members in IRFs that complete the patient assessments would continue to input the same information they currently do into the software and therefore, in general, staff should not need to be retrained. We are not proposing any changes to how providers code items on the IRF–PAI, only how the information is used to classify patients into CMGs for determining the payment rate. We wish to point out that the weighted motor score for classifying patients into CMGs will be computed automatically by the GROUPER software, not by a clinician. CMS will issue the new GROUPER software at no cost to providers, and the new GROUPER software can be used in the same manner as the old GROUPER software. Thus, the proposed change to the weighted motor score index would not be expected to add to providers' costs. However, CMS will assist providers in any training efforts that may be required to implement the proposed new weighting methodology.

Comment: Two commenters raised concerns regarding the proposed change in assignment of the transfer-to-toilet item. They indicated that this change could artificially elevate the motor score, reduce payments, and have a negative impact on severely ill patients, specifically spinal cord injury patients.

Response: We proposed to assign the transfer-to-toilet item on the IRF–PAI a value of 2, instead of 1, when the provider has recorded a value of 0 (meaning the activity did not occur) because RAND's regression analysis of calendar year 2002 and FY 2003 data indicates that patients for whom a 0 is recorded are more similar in terms of their characteristics and costliness to patients with a recorded score of 2 than to patients with a recorded score of 1. We proposed to make this change in order to provide the most accurate payment for each patient.

We do not believe this proposed change will have a significant effect on payment or on access to care for patients for the following reasons: (1) The transfer-to-toilet item is only 1 of 12 items that make up the motor score index, (2) we are only proposing to change the score on this item by 1 point (which results in a 1.4 increase to the weighted motor score index), and (3) this change will only affect those patients for whom a 0 is recorded for this item (only about 2.8 percent of all IRF cases RAND examined).

Furthermore, the payment for a particular patient with a 0 value for this item would only change if the proposed 1.4 point increase in the motor score index changes the patient's CMG classification. For this to happen, the patient's motor score would have to be within 1.4 points of a CMG boundary. In particular, as the commenter noted the example of spinal cord injury patients, we will use RIC 04 (traumatic spinal cord injury) as an example. The difference in motor scores values that would qualify a patient for CMG 0402 versus CMG 0401 is 18.1 points, and the difference in motor scores values that would qualify a patient for CMG 0403 versus CMG 0402 is 14.3 points. Because these ranges are relatively large, we believe patients will rarely change CMGs as a result of a 1.4 point increase in the motor score index.

We proposed this change in coding of the transfer-to-toilet item because, based on RAND's analysis, we believe this proposed change will improve the accuracy of payments in the IRF PPS. As always, we are concerned that all patients have appropriate access to IRF services. Accordingly, we will monitor the impact of this proposed change and the other proposed changes to the IRF classification system finalized in this final rule to ensure that patients continue to have adequate access to IRF care.

Comment: One commenter was concerned that the weighted motor score might disproportionately affect IRF payments for certain types of patients with certain conditions, such as cognitively impaired patients with significant lower body impairments or with significant dysfunctions in upper body and bladder/bowel problems.

Response: We do not believe the weighted motor score methodology will have a disproportionate affect on any particular groups of patients. RAND's data analysis and RAND's technical expert panel did not raise any concerns regarding any particular groups of patients that would be unduly affected by these changes. We believe that the types of patients the commenter mentioned were included in the data RAND used to determine the optimal weights for the weighted motor score and to calibrate the appropriate payments. The purpose of the proposed weighted motor score, as with all of the proposed changes discussed in this final rule, is to align payments more appropriately with the costs of caring for all types of patients in IRFs. CMS will continue to closely monitor the data to ensure that no groups of patients are disproportionately affected by the change to a weighted motor score index.

Comment: One commenter indicated that CMS, in proposing to implement the weighted motor score, did not seek enough review from experts who developed and researched the FIM items.

Response: As discussed in this final rule under section IV, we contracted with RAND to examine potential refinements to the IRF PPS. RAND sought advice from a technical expert panel, which reviewed their methodology and findings regarding the proposed weighted motor score methodology and generally endorsed the methodology we proposed in the FY 2006 proposed rule (70 FR 30188). RAND's technical expert panel included representatives from industry groups, other government entities, academia, and other researchers, including members with expertise in the FIM items. Thus, we believe RAND sought sufficient review from experts in the field in developing the proposed weighted motor score methodology.

Comment: One commenter requested that CMS remove the transfer to tub item from the IRF–PAI, to reduce the length of the form, because the transfer-to-tub item is not used in classifying patients into CMGs for payment purposes.

Response: We did not propose any changes to the IRF–PAI. However, we will take this comment into consideration in future reviews of the IRF–PAI. We would need to more fully consider the benefits and costs of removing this item from the IRF–PAI form to determine if this change is appropriate.

Final Decision: After carefully considering all of the comments we received on the proposed weighted motor score methodology, we are finalizing our decision to adopt the methodology as described above. Specifically, the weighted motor score index will be computed using the following equation:

Motor score index = 1.4*dressing lower + 1.2*toilet + 0.9*bathing + 0.6*eating + 0.2*dressing upper + 0.2*grooming + 0.5*bladder + 0.2*bowel + 2.2*transfer to bed + 1.4*transfer to toilet + 1.6*walking + 1.6*stairs.

In addition, we are finalizing our decision to reassign a value of 2 instead of 1 when providers code a 0 for the transfer-to-toilet item on a patient's IRF–PAI. Based on RAND's regression analysis of FY 2003 data, the best data available for analysis, we believe these changes will increase the accuracy of IRF PPS payments.

3. Changes to the Relative Weights

In the FY 2006 proposed rule (70 FR 30188), we proposed to update the relative weights assigned to each CMG. Section 1886(j)(2)(B) of the Act requires that an appropriate relative weight be assigned to each CMG. Relative weights that account for the variance in cost per discharge and resource utilization among payment groups are a primary element of a case-mix adjusted prospective payment system. The accuracy of the relative weights helps to ensure that payments reflect as much as possible the relative costs of IRF patients and, therefore, that beneficiaries have access to care and receive the appropriate services.

Section 1886(j)(2)(C)(i) of the Act requires the Secretary from time to time to adjust the classifications and weighting factors to reflect changes in treatment patterns, technology, case mix, number of payment units for which payment to IRFs is made, and other factors which may affect the relative use of resources. In accordance with this section of the Act, we proposed to recalculate a relative weight for each CMG that is proportional to the resources needed by an average inpatient rehabilitation case in that CMG. For example, cases in a CMG with a relative weight of 2, on average, would cost twice as much as cases in a CMG with a relative weight of 1. We did not propose to change the methodology for calculating the relative weights, as described in the August 7, 2001 final rule (66 FR 41316, 41351 through 41353) and consequently, we only proposed to update the relative weights themselves.

As previously stated, we believe that improved coding of data, the availability of more complete data, and changes to the tier comorbidities and CMGs helped us decide to propose to update the relative weights assigned to the CMGs so that they could continue to accurately represent the differences in costs across CMGs and across tiers. Therefore, we proposed to recalculate the relative weights. However, we proposed no change to the methodology for calculating the relative weights. Instead, we proposed to update the relative weights (the relative weights that are multiplied by the standard payment conversion factor to assign relative payments for each CMG and tier) using the same methodology as described in the August 7, 2001 final rule (66 FR 41316, 41351 through 41353) and as noted previously in section V.C.3 of this final rule, using FY 2003 Medicare billing data. To summarize, we proposed to use the following basic steps to update the relative weights: The first step in calculating the CMG weights is to estimate the effects that comorbidities have on costs. The second step is to adjust the cost of each Medicare discharge (case) to reflect the effects found in the first step. In the third step, the adjusted costs from the second step are used to calculate ''relative adjusted weights'' in each CMG using the hospital-specific relative value method. The final steps are to calculate the CMG relative weights by modifying the ''relative adjusted weight'' with the effects of the existence of the comorbidity tiers (explained below) and normalize the weights to 1.

We proposed to make the tier and the CMG changes in such a way that total estimated aggregate payments to IRFs for FY 2006 would be the same with or without the changes (that is, in a budget neutral manner) for the following reasons. First, we believe that the results of RAND's analysis of 2002 and 2003 IRF cost data suggest that additional money does not need to be added to the IRF PPS. RAND's analysis found, for example, that if all IRFs had been paid based on 100 percent of the IRF PPS payment rates throughout all of 2002 (some IRFs were still transitioning to PPS payments during 2002), PPS payments during 2002 would have been 17 percent higher than IRFs' costs. Furthermore, RAND did not find evidence that the overall costliness of patients (average case mix) in IRFs increased substantially in 2002 compared with 1999. As discussed in detail in section VI.A of this final rule, RAND found that real case mix increased by at most 1.5 percent, and may have decreased by as much as 2.4 percent. The available evidence, therefore, suggests that IRF PPS payments, in aggregate, are likely adequate to pay for the types of patients IRFs treat.

The purpose of the CMG and tier changes is to ensure that the existing resources already in the IRF PPS are distributed better among IRFs according to the relative costliness of the types of patient they treat. Section 1886(j)(2)(C)(i) of the Act confers broad statutory authority upon the Secretary to adjust the classification and weighting factors to account for relative resource use. Consistent with that broad statutory authority, we proposed to update the relative weights to more accurately reflect the IRF case mix.

To ensure that total estimated aggregate payments to IRFs do not change, we proposed to apply a factor to the standard payment amount to ensure that estimated aggregate payments due to the proposed changes to the tier comorbidities, the CMGs, the weighted motor score, and the relative weights for FY 2006 are not greater or less than those that would have been made in FY 2006 without the proposed changes. In section VI.B.7 and section VI.B.8 of this final rule, we discuss the methodology and factor we proposed to apply to the standard payment amount.

Public comments and our responses on the proposed changes for updating the relative weights are summarized below.

Comment: Several commenters noted that, in many of the CMGs, the average length of stay has decreased. One commenter suggested that there might have been inconsistencies between the relative weights and the average length of stay values reported in the proposed Table 6 in the FY 2006 proposed rule (70 FR 30188, 30213 through 30219).

Response: RAND's analysis found that the average length of stay in IRFs has decreased substantially in recent years. This decrease is reflected in the average length of stay values for most of the CMGs in the proposed Table 6 in the FY 2006 proposed rule (70 FR 30188, 30213 through 30219). However, with the exception of determining IRF payments in certain transfer cases, the average length of stay does not affect IRF payments. CMS does not require IRFs to treat these average length of stay values as goals or targets for particular cases. IRFs are generally free to treat particular patients for as few or as many days as they deem medically appropriate. We encourage IRFs to admit patients for the length of time that results in the best quality of care for the patient. The

length of stay portion of the proposed Table 6 in the FY 2006 proposed rule (70 FR 30188, 30213 through 30219) is provided for informational purposes only.

The relative weights for each of the CMGs and tiers represent the relative costliness of patients in those CMGs and tiers compared with patients in other CMGs and tiers. The average length of stay for each CMG and tier represents the average number of days patients in that CMG and tier were treated in IRFs, based on the FY 2003 data. IRF PPS payments are determined on a per-discharge basis, meaning that providers are paid a pre-determined payment amount according to that patient's CMG and tier classification, regardless of the number of days the patient is treated in the IRF. The only exceptions to this general policy are for very short-stay cases and for certain transfer cases. Because payments are made on a per-discharge basis, there is not necessarily any correlation between the number of days a patient is treated in the IRF and the payment amount for that patient. If, for example, the relative weight for a particular CMG in tier 1 is higher than the relative weight for that same CMG in the no-comorbidity tier, this means that cases in that CMG in tier 1 are expected to be more costly for the IRF to treat than cases in that CMG in the no-comorbidity tier. The average length of stay for patients in that CMG in tier 1, however, could be lower than the average length of stay of patients in that CMG in the no-comorbidity tier because the treatment for patients in that CMG in tier 1 could be much more intensive for a shorter period of time than the treatment for patients in the no-comorbidity tier, who could require less-intensive treatment over a longer period of time. Thus, the relative weights may not bear a relationship to the length of stay, and the two need not be consistent with each other.

Comment: Several commenters expressed concerns about decreases in the relative weights for certain CMGs, particularly for the stroke and traumatic brain injury CMGs. These commenters stated that, if the relative weights and, consequently, the payment rates for certain CMGs were to decrease, it could potentially lead to reduced access to IRF care for patients in the affected CMGs.

Response: The commenters were not clear as to which CMG weights they were using as a comparison with the proposed FY 2006 relative weights in Table 6 of the FY 2006 proposed rule (70 FR 30188, 30213 through 30219). We believe that the commenter was comparing the proposed FY 2006 relative weights published in the FY 2006 proposed rule (70 FR 30188, 30213 through 30219) to the FY 2005 relative weights published in the July 30, 2004 notice updating the payment rates (69 FR 45721). Because we proposed revised definitions of the CMGs, as described in section V.C.1 of this final rule, the proposed new relative weights for the proposed new CMGs cannot be compared with the FY 2005 relative weights based on the FY 2005 CMG definitions. The types of patients included in each CMG, as defined in Table 4 and Table 6 of the FY 2006 proposed rule (70 FR 30188, 30207 through 30210, 30213 through 30219) are likely not the same patients included in the CMGs under the FY 2005 CMG definitions.

Furthermore, as previously stated, the improved coding of data, the availability of more complete data, proposed changes to the tier comorbidities and CMGs, and changes in IRF cost structures contributed to our decision to propose to update the relative weights assigned to the CMGs so that the weights continue to represent the differences in costs across CMGs and across tiers. For these reasons, we have proposed to recalculate the relative weights to ensure that IRF payments remain aligned as closely as possible with the costs of care. We will continue to monitor beneficiaries' access to IRF care to ensure that the changes to the IRF classification system noted in this final rule do not impede access to IRF care for Medicare beneficiaries in general or for beneficiaries with any particular conditions. In particular, we believe it is important to ensure that stroke patients have appropriate access to rehabilitation services, as this population benefits considerably from receiving prompt rehabilitation care.

Nevertheless, we asked RAND to review the average relative weights for the stroke and traumatic brain injury RICs both under the FY 2005 CMG definitions and under the proposed new CMG definitions. The average relative weights were essentially identical within these two RICs, meaning that providers would use essentially the same relative weight to calculate payments for an ''average'' stroke patient and an ''average'' traumatic brain injury patient in FY 2006 as they used to calculate payments for the ''average'' stroke patient and the ''average'' traumatic brain injury patient in FY 2005. We believe, based on RAND's regression analysis of FY 2003 data, that the proposed changes to the classification system will improve the alignment of IRF payments with the costs of care and, thereby, improve access to care for IRF patients.

Comment: One commenter stated that if the proposed recalculation of the relative weights were to result in lower payments for some patients and, therefore, were to lead to payments that did not adequately cover treatment costs for those patients, then patients' access to IRF care might suffer. A couple of commenters requested that CMS phase in the proposed changes to the classification system.

Response: We considered proposing a phase in of the proposed changes to the classification system, but we believe a phase in of the changes would have introduced undue complication to the classification system because it would have required individual providers, fiscal intermediaries, and CMS to compute two different sets of CMGs to determine payments.

The intent of the proposed changes to the IRF classification system, including the proposed recalculation of the relative weights, was to ensure that IRF payments are aligned as closely as possible with the costs of care. We believe these proposed revisions will help us to ensure that IRF payments and costs continue to be aligned as appropriately as possible. We will continue to monitor beneficiaries' access to IRF care to ensure that the payment system continues to provide such access to IRF care.

To assist providers in adopting the changes to the classification system we are finalizing in this final rule, we will make the new GROUPER and PRICER software available for download on the CMS Web site as soon as possible and before implementation of the final changes. Furthermore, our analysis of the impacts, detailed in section XII of this final rule, indicate that aggregate effects on provider payments of the proposed changes are expected to be small.

Comment: One commenter noted that the proposed relative weights for the burn CMG (CMG 2101) for tier 1 and tier 2 are the same. The commenter asked whether this could be an error.

Response: This was not an error. The FY 2003 data do not contain enough patients in CMG 2101 in tiers 1 and 2 to estimate precise relative weights for each tier. Accordingly, RAND combined patients in these two tiers to estimate the proposed and final relative weights for both tiers.

Comment: Several commenters requested that CMS make available to the public the patient-level data on CMG assignments, the IRF–PAI data, the MedPAR files, and the cost report data RAND used for their analysis to enable the public to replicate RAND's analysis.

Response: The data files the commenters requested are generally available (and were generally available during the comment period for the FY 2006 proposed rule) through CMS's standard data distribution systems. Please refer to CMS's Web site at *http://www.cms.hhs.gov/researchers/statsdata.asp* for more information about obtaining data from CMS.

Comment: One commenter asked if CMS could provide the standard deviation information for the average length of stay information listed for each CMG and tier.

Response: We will consider posting this type of information on our Web site.

Comment: One commenter noted the operational challenges, such as the large number of revisions that need to be made to the GROUPER software, of implementing the changes to the IRF classification system that CMS has proposed and further requested that CMS make available the new CMG GROUPER to the public.

Response: We agree with the commenter that the operational issues of implementing the proposed changes to the classification system may be challenging, but we will provide the necessary assistance to ensure a smooth transition to the new tiers and CMGs, the new weighted motor score methodology, and the new relative weights. As is our practice, we will make the new GROUPER and PRICER software available for download on the CMS Web site as soon as possible and prior to implementation of the finalized changes. In addition, we will evaluate whether provider, fiscal intermediary, or regional office training may be required to promote understanding of any final changes and assist in the implementation of such changes. Our foremost goal will be to ensure a smooth implementation of changes because we believe that any final changes to the classification system will improve the accuracy of payments in the IRF PPS.

Comment: Several commenters requested that CMS evaluate the effects of the proposed changes to the IRF classification system after the changes are implemented and propose additional refinements to the classification system in future years, if necessary.

Response: We agree with the commenter that it will be important to evaluate the effects of any changes to the classification system to ensure that IRF payments continue to be aligned as closely as possible with the costs of care. CMS intends to monitor the data carefully to ensure that patients who require inpatient rehabilitation services have adequate access to these services. We will propose refinements if, in the future, we later identify the need to make modifications to the classification system to ensure that IRF payments remain aligned with the costs of care.

Final Decision: After carefully considering all the comments we received on the proposed re-calculation of the relative weights, we are finalizing our proposal to adopt the relative weights presented in Table 4, without change. However, we note that, after reviewing the average length of stay values in response to the comments we received, we have made a slight revision to the methodology for computing the average length of stay values reported in Table 4 to be consistent with the way we presented average length of stay values in the August 7, 2001 final rule (66 FR 41316).

TABLE 4.—RELATIVE WEIGHTS FOR CASE-MIX GROUPS (CMGS)

CMG	CMG description (M = motor, C = cognitive, A = age)	Relative weights				Average length of stay			
		Tier 1	Tier 2	Tier 3	None	Tier 1	Tier 2	Tier 3	None
0101	Stroke M > 51.05	0.7691	0.7299	0.6484	0.6350	8	11	9	9
0102	Stroke M > 44.45 and M < 51.05 and C > 18.5	0.9471	0.8989	0.7985	0.7820	11	15	11	10
0103	Stroke M > 44.45 and M < 51.05 and C < 18.5	1.1162	1.0594	0.9411	0.9217	14	13	12	12
0104	Stroke M > 38.85 and M < 44.45	1.1859	1.1255	0.9999	0.9792	13	14	13	13
0105	Stroke M > 34.25 and M < 38.85	1.4233	1.3509	1.2001	1.1753	16	17	15	15
0106	Stroke M > 30.05 and M < 34.25	1.6567	1.5724	1.3969	1.3680	18	20	18	18
0107	Stroke M > 26.15 and M < 30.05	1.9121	1.8148	1.6122	1.5790	21	23	20	21
0108	Stroke M < 26.15 and A > 84.5	2.2106	2.0981	1.8639	1.8254	27	29	24	24
0109	Stroke M > 22.35 and M < 26.15 and A < 84.5	2.1976	2.0858	1.8529	1.8147	23	26	24	23
0110	Stroke M < 22.35 and A < 84.5	2.6262	2.4926	2.2143	2.1686	30	33	28	28
0201	Traumatic brain injury M > 53.35 and C > 23.5	0.8140	0.6826	0.6021	0.5648	10	9	9	8
0202	Traumatic brain injury M > 44.25 and M < 53.35 and C > 23.5.	1.0437	0.8753	0.7720	0.7241	12	10	11	9
0203	Traumatic brain injury M > 44.25 and C < 23.5	1.2487	1.0472	0.9236	0.8664	15	15	12	12
0204	Traumatic brain injury M > 40.65 and M < 44.25	1.3356	1.1201	0.9879	0.9267	15	16	13	13
0205	Traumatic brain injury M > 28.75 and M < 40.65	1.6381	1.3738	1.2116	1.1365	17	18	16	15
0206	Traumatic brain injury M > 22.05 and M < 28.75	2.1379	1.7930	1.5814	1.4833	23	22	21	20
0207	Traumatic brain injury M < 22.05	2.7657	2.3194	2.0457	1.9188	35	29	26	25
0301	Non-traumatic brain injury M > 41.05	1.1293	0.9536	0.8440	0.7764	12	12	11	10
0302	Non-traumatic brain injury M > 35.05 and M < 41.05.	1.4729	1.2438	1.1008	1.0126	14	16	14	13
0303	Non-traumatic brain injury M > 26.15 and M < 35.05.	1.7575	1.4841	1.3136	1.2083	20	19	17	16
0304	Non-traumatic brain injury M < 26.15	2.4221	2.0453	1.8103	1.6651	31	25	23	21
0401	Traumatic spinal cord injury M > 48.45	0.9891	0.8517	0.7656	0.6837	12	12	10	10
0402	Traumatic spinal cord injury M > 30.35 and M < 48.45.	1.3640	1.1746	1.0558	0.9428	19	16	14	12
0403	Traumatic spinal cord injury M > 16.05 and M < 30.35.	2.3743	2.0446	1.8379	1.6412	22	24	23	22
0404	Traumatic spinal cord injury M < 16.05 and A > 63.5.	4.2567	3.6656	3.2950	2.9424	51	46	39	37
0405	Traumatic spinal cord injury M < 16.05 and A < 63.5.	3.2477	2.7967	2.5139	2.2449	32	38	33	28
0501	Non-traumatic spinal cord injury M > 51.35	0.7705	0.6449	0.5641	0.5059	9	8	8	7

TABLE 4.—RELATIVE WEIGHTS FOR CASE-MIX GROUPS (CMGS)—Continued

CMG	CMG description (M = motor, C = cognitive, A = age)	Relative weights				Average length of stay			
		Tier 1	Tier 2	Tier 3	None	Tier 1	Tier 2	Tier 3	None
0502	Non-traumatic spinal cord injury M > 40.15 and M < 51.35.	1.0316	0.8634	0.7553	0.6774	13	12	10	9
0503	Non-traumatic spinal cord injury M > 31.25 and M < 40.15.	1.3676	1.1446	1.0013	0.8979	15	15	13	12
0504	Non-traumatic spinal cord injury M > 29.25 and M < 31.25.	1.7120	1.4328	1.2534	1.1240	20	19	16	15
0505	Non-traumatic spinal cord injury M > 23.75 and M < 29.25.	2.0289	1.6981	1.4855	1.3321	23	22	19	18
0506	Non-traumatic spinal cord injury M < 23.75	2.7607	2.3106	2.0212	1.8126	29	28	25	23
0601	Neurological M > 47.75	0.8965	0.7331	0.6966	0.6493	11	10	9	9
0602	Neurological M > 37.35 and M < 47.75	1.1925	0.9752	0.9267	0.8636	13	13	12	12
0603	Neurological M > 25.85 and M < 37.35	1.5266	1.2484	1.1863	1.1056	16	17	15	15
0604	Neurological M < 25.85	1.9539	1.5979	1.5183	1.4151	22	20	20	19
0701	Fracture of lower extremity M > 42.15	0.9055	0.7736	0.7265	0.6585	12	11	10	9
0702	Fracture of lower extremity M > 34.15 and M < 42.15.	1.1757	1.0044	0.9432	0.8549	13	14	13	12
0703	Fracture of lower extremity M > 28.15 and M < 34.15.	1.4636	1.2504	1.1742	1.0643	16	17	15	14
0704	Fracture of lower extremity M < 28.15	1.7962	1.5345	1.4410	1.3062	20	20	19	18
0801	Replacement of lower extremity joint M > 49.55	0.6561	0.5511	0.5109	0.4596	7	7	7	6
0802	Replacement of lower extremity joint M > 37.05 and M < 49.55.	0.8570	0.7198	0.6673	0.6004	10	10	9	8
0803	Replacement of lower extremity joint M > 28.65 and M < 37.05 and A > 83.5.	1.2707	1.0672	0.9894	0.8901	15	15	13	12
0804	Replacement of lower extremity joint M > 28.65 and M < 37.05 and A < 83.5.	1.1069	0.9296	0.8618	0.7754	13	12	11	10
0805	Replacement of lower extremity joint M > 22.05 and M < 28.65.	1.3937	1.1705	1.0852	0.9763	17	16	14	13
0806	Replacement of lower extremity joint M < 22.05	1.6726	1.4047	1.3023	1.1716	18	19	17	15
0901	Other orthopedic M > 44.75	0.8412	0.7658	0.6805	0.6090	10	11	10	9
0902	Other orthopedic M > 34.35 and M < 44.75	1.1054	1.0063	0.8942	0.8002	13	13	12	11
0903	Other orthopedic M > 24.15 and M < 34.35	1.4583	1.3276	1.1797	1.0557	18	19	16	15
0904	Other orthopedic M < 24.15	1.8281	1.6643	1.4788	1.3234	25	23	20	19
1001	Amputation, lower extremity M > 47.65	0.9638	0.8888	0.7931	0.7312	11	11	11	10
1002	Amputation, lower extremity M > 36.25 and M < 47.65.	1.2709	1.1719	1.0457	0.9641	14	15	14	13
1003	Amputation, lower extremity M < 36.25	1.7876	1.6483	1.4709	1.3561	19	22	19	18
1101	Amputation, non-lower extremity M > 36.35	1.2544	1.0496	0.9189	0.8462	14	15	12	11
1102	Amputation, non-lower extremity M < 36.35	1.8780	1.5713	1.3756	1.2668	19	19	18	17
1201	Osteoarthritis M > 37.65	1.0184	0.8794	0.8106	0.7317	11	12	11	10
1202	Osteoarthritis M > 30.75 and M < 37.65	1.3181	1.1383	1.0492	0.9470	15	16	14	13
1203	Osteoarthritis M < 30.75	1.6238	1.4022	1.2925	1.1666	21	19	17	16
1301	Rheumatoid, other arthritis M > 36.35	1.0338	0.9617	0.8325	0.7358	12	13	11	10
1302	Rheumatoid, other arthritis M > 26.15 and M < 36.35.	1.4324	1.3325	1.1534	1.0195	15	18	15	14
1303	Rheumatoid, other arthritis M < 26.15	1.8308	1.7032	1.4743	1.3032	22	21	20	18
1401	Cardiac M > 48.85	0.8172	0.7352	0.6396	0.5806	10	9	9	8
1402	Cardiac M > 38.55 and M < 48.85	1.1034	0.9926	0.8636	0.7839	12	13	12	11
1403	Cardiac M > 31.15 and M < 38.55	1.3735	1.2356	1.0750	0.9759	16	16	14	13
1404	Cardiac M < 31.15	1.7419	1.5671	1.3633	1.2376	21	20	18	16
1501	Pulmonary M > 49.25	0.9222	0.8995	0.7687	0.7397	11	12	10	10
1502	Pulmonary M > 39.05 and M < 49.25	1.1659	1.1371	0.9718	0.9352	12	15	12	12
1503	Pulmonary M > 29.15 and M < 39.05	1.4269	1.3917	1.1894	1.1445	12	17	15	15
1504	Pulmonary M < 29.15	1.8812	1.8348	1.5681	1.5089	21	22	20	18
1601	Pain syndrome M > 37.15	1.0065	0.8544	0.7731	0.6904	12	11	10	9
1602	Pain syndrome M > 26.75 and M < 37.15	1.3810	1.1724	1.0607	0.9473	15	17	14	13
1603	Pain syndrome M < 26.75	1.6988	1.4421	1.3048	1.1653	19	19	17	16
1701	Major multiple trauma without brain or spinal cord injury M > 39.25.	1.0102	0.9634	0.8323	0.7321	12	12	11	10
1702	Major multiple trauma without brain or spinal cord injury M > 31.05 and M < 39.25.	1.3305	1.2688	1.0962	0.9643	14	16	15	13
1703	Major multiple trauma without brain or spinal cord injury M > 25.55 and M < 31.05.	1.5832	1.5098	1.3043	1.1474	17	20	17	16
1704	Major multiple trauma without brain or spinal cord injury M < 25.55.	1.9808	1.8889	1.6319	1.4355	26	26	21	20
1801	Major multiple trauma with brain or spinal cord injury M > 40.85.	1.2118	0.9832	0.8245	0.7282	15	13	12	10
1802	Major multiple trauma with brain or spinal cord injury M > 23.05 and M < 40.85.	1.9385	1.5728	1.3190	1.1649	20	21	18	16

TABLE 4.—RELATIVE WEIGHTS FOR CASE-MIX GROUPS (CMGS)—Continued

CMG	CMG description (M = motor, C = cognitive, A = age)	Relative weights				Average length of stay			
		Tier 1	Tier 2	Tier 3	None	Tier 1	Tier 2	Tier 3	None
1803	Major multiple trauma with brain or spinal cord injury M < 23.05.	3.4784	2.8222	2.3668	2.0903	43	33	30	27
1901	Guillian Barre M > 35.95	1.2362	1.0981	1.0677	0.9349	14	13	14	12
1902	Guillian Barre M > 18.05 and M < 35.95	2.3162	2.0574	2.0004	1.7515	27	25	24	23
1903	Guillian Barre M < 18.05	3.3439	2.9703	2.8881	2.5287	37	39	31	33
2001	Miscellaneous M > 49.15	0.8743	0.7387	0.6623	0.6047	10	10	9	8
2002	Miscellaneous M > 38.75 and M < 49.15	1.1448	0.9672	0.8671	0.7917	12	13	11	11
2003	Miscellaneous M > 27.85 and M < 38.75	1.4789	1.2495	1.1202	1.0227	16	16	15	14
2004	Miscellaneous M < 27.85	1.9756	1.6692	1.4964	1.3663	25	22	20	18
2101	Burns M > 0	2.1858	2.1858	1.5910	1.4762	29	24	19	17
5001	Short-stay cases, length of stay is 3 days or fewer.	.....	.....	.....	0.2201	.....	.....	.....	2
5101	Expired, orthopedic, length of stay is 13 days or fewer.	.....	.....	.....	0.6351	.....	.....	.....	8
5102	Expired, orthopedic, length of stay is 14 days or more.	.....	.....	.....	1.6002	.....	.....	.....	22
5103	Expired, not orthopedic, length of stay is 15 days or fewer.	.....	.....	.....	0.7204	.....	.....	.....	8
5104	Expired, not orthopedic, length of stay is 16 days or more.	.....	.....	.....	1.8771	.....	.....	.....	24

Based on RAND's regression analysis of FY 2003 data, the best data available for analysis, we believe these changes will increase the accuracy of IRF PPS payments.

VI. FY 2006 Federal Prospective Payment Rates

A. Reduction of the Standard Payment Amount To Account for Coding Changes

In the FY 2006 proposed rule (70 FR 30188), we proposed to reduce the standard payment amount by 1.9 percent to account for coding changes. Section 1886(j)(2)(C)(ii) of the Act requires the Secretary to adjust the per payment unit payment rate for IRF services to eliminate the effect of coding or classification changes that do not reflect real changes in case mix if the Secretary determines that changes in coding or classification of patients have resulted or will result in changes in aggregate payments under the classification system. As described below, in accordance with this section of the Act and based on research conducted by RAND under contract with us, we proposed to reduce the standard payment amount for patients treated in IRFs by 1.9 percent.

We proposed to reduce the standard payment amount by 1.9 percent because RAND's regression analysis of calendar year 2002 data found that payments to IRFs were about $140 million more than expected during 2002 because of changes in the classification of patients in IRFs, and that a portion of this increase in payments was due to coding changes that do not reflect real changes in case mix. If IRF patients have more costly impairments, lower functional status, or more comorbidities, and thus require more resources in the IRF in 2002 than in 1999, we would consider this a real change in case mix. Conversely, if IRF patients have the same impairments, functional status, and comorbidities in 2002 as they did in 1999 but are coded differently resulting in higher payment, we consider this a case mix increase due to coding. We believe that changes in payment amounts should accurately reflect changes in IRFs' patient case mix (that is, the true cost of treating patients), and should not be influenced by changes in coding practices.

Under the IRF PPS, payments for each Medicare rehabilitation patient are determined using a multi-step process. First, a patient is assigned to a particular CMG and a tier based on as many as four patient characteristics at admission: impairment, functional independence, comorbidities, and age. The amount of the payment for each patient is then calculated by taking the standard payment conversion factor ($12,958 in FY 2005) and adjusting it by multiplying by a relative weight, which depends on each patient's CMG and tier assignment.

For example, an 80-year old hip replacement patient with a motor score between 47 and 54 and no comorbidities would be assigned to a particular CMG and tier based on these characteristics. The CMG and tier to which he is assigned would have an associated relative weight, in this case 0.5511 in FY 2005 (69 FR at 45725). This relative weight would be multiplied by the standard payment conversion factor of $12,958 to equal the payment of $7,141 in FY 2005 ($0.5511 \times \$12,958 = \$7,141$). However, based on the following discussion, we are lowering the standard payment amount by 1.9 percent to account for coding changes, as opposed to real case mix changes, that have increased payments to IRFs.

As described in the August 7, 2001 final rule, we contracted with RAND to analyze IRF data to support our efforts in developing the classification system and the IRF PPS. We have continued our contract with RAND to support us in developing potential refinements to the classification system and the PPS for the FY 2006 proposed rule (70 FR 30188) and this final rule. As part of this research, we asked RAND to examine changes in case mix and coding since the IRF PPS. To examine these changes, RAND compared 2002 data from the first year of implementation of the PPS with the 1999 (pre-PPS) data used to construct the IRF PPS.

RAND's analysis of the 2002 data, as described in more detail below, demonstrates that changes in the types of patients going to IRFs and changes in coding both caused increases in payments to IRFs between 1999 and 2002. The 2002 data are more complete than the 1999 data that were first used to design the IRF PPS because they include all Medicare-covered IRF cases. Although the 1999 data we used in designing the original standard payment rate for the IRF PPS were the best available data we had at the time, they were based on a sample (64 percent) of IRF cases.

In addition, such review was necessary because, as explained below,

we believe that the implementation of the IRF PPS caused important changes in coding. The IRF PPS likely improved the accuracy and consistency of coding across IRFs, because of the educational programs that were implemented in 2001 and 2002 and because items that previously did not affect payments (such as comorbidities) became important factors for determining the PPS payments. Since these items now affect payments, there is greater incentive to code for them. In addition, the IRF PPS changed the instructions for coding some of the FIM items on the IRF–PAI, so that the same patient may have been correctly coded differently in 2002 than in 1999.

Although we believe implementation of the IRF PPS resulted in changes to how the patient assessment data have been coded, implementation of the IRF PPS may have also caused changes in case mix because it increased incentives for IRFs to take patients with greater impairment, lower function, or comorbidities. Under the Tax Equity and Fiscal Responsibility Act of 1982 (TEFRA) (Pub. L. 97–248), IRFs were paid on the basis of Medicare reasonable costs limited by a facility-specific target amount per discharge. IRFs were paid on a per discharge basis without per discharge adjustments being made for the impairments, functional status, or comorbidities of patients. Thus, IRFs had a strong incentive to admit less costly patients to ensure that the costs of treating patients did not exceed their TEFRA payments. Under the IRF PPS, however, IRFs' PPS payments are tied directly to the principle diagnosis and accompanying comorbidities of the patient. Thus, based on the characteristics of the patients (that is, impairments, functional status, and comorbidities), the more costly the patient is expected to be, the higher the PPS payment. Therefore, IRFs may have greater incentives than they had under TEFRA to admit more costly patients.

Thus, in light of these concerns, RAND performed an analysis using IRF Medicare claims data matched with FIM and IRF–PAI data. Comparing 2002 data (post-PPS) with 1999 data (pre-PPS), RAND found that the observed case mix the expected costliness of patients-in IRFs increased by 3.4 percent between the two time periods. Thus, we paid 3.4 percent, or about $140 million, more than expected during 2002 because of changes in the classification of cases in IRFs. However, RAND found little evidence that the patients admitted to IRFs in 2002 had higher resource needs (that is, more impairments, lower functioning, or more comorbidities) than the patients admitted in 1999. In fact, most of the changes in case mix that RAND documented from the acute care hospital records implied that IRF patients should have been less costly to treat in 2002 than in 1999. For example, RAND found a 16 percent decrease in the proportion of patients treated in IRFs following acute hospitalizations for stroke, when it compared the results of the 2002 data with the 1999 data. Stroke patients tend to be relatively more costly than other types of patients for IRFs because they tend to require more intensive services than other types of patients. A decrease in the proportion of stroke patients relative to other types of patients, therefore, would likely contribute to a decrease in the overall expected costliness of IRF patients. RAND also found a 22 percent increase in the proportion of cases treated in IRFs following a lower extremity joint replacement. Lower extremity joint replacement patients tend to be relatively less costly for IRFs than other types of patients because their care needs tend to be less intensive than other types of patients. For this reason, the increase in the proportion of these patients treated in IRFs would suggest a decrease in the overall expected costliness of IRF patients.

We asked RAND to quantify the amount of the case mix change that was due to real case mix change (that is, the extent to which IRF patients had more impairments, lower functioning, or more comorbidities) and the amount that was due to coding. However, while the data permit RAND to observe the total change in expected costliness of patients over time with some precision, estimating the amount of this total change that is real and the amount that is due to coding generally cannot be done with the same level of precision. Therefore, in order to quantify the amounts that were due to real case mix change and the amounts that were due to coding, RAND used two approaches to give a range of estimates within which the correct estimates would logically fall—(1) one that potentially underestimates the amount of real case mix change and overestimates the amount of case mix change due to coding; and (2) one that potentially overestimates real change and underestimates change due to coding. These two approaches give us a range of estimates, which should logically border the actual amount of real case mix and coding change. The first approach uses the following assumptions:

- Changes over time in characteristics recorded during the acute hospitalizations preceding the inpatient rehabilitation facility stay were real case mix changes (as acute care hospitals had little incentive to change their coding of patients in response to the IRF PPS); and
- Changes over time in IRF coding that did not correspond with changes in the characteristics recorded during the acute hospitalizations were attributable to changes in IRF coding practices.

To illustrate this point, suppose, for example, that the IRF records showed that there were a greater number of patients with a pulmonary condition in IRFs in 2002 than in 1999. Patients with a pulmonary condition tend to be relatively more costly for IRFs to treat than other types of patients, so an increase in the number of these patients would indicate an increase in the costliness of IRF patients (that is, an increase in IRFs' case mix). However, in 2002 IRFs had a much greater incentive to record if patients had a pulmonary condition than they did in 1999 because they got paid more for this condition in 2002, whereas they did not in 1999. Therefore, it is reasonable to expect that some of the increase in the number of patients with a pulmonary condition was due to the fact that IRFs were recording that condition for patients more frequently, not that there were really more patients of that type (although there may also have been some more patients of that type). To determine the extent to which IRFs may have just been coding that condition more often versus the extent to which there actually may have been more patients with a pulmonary condition going to IRFs than before, RAND looked at the one source of information that we believe was least likely to be influenced by the incentive to code patients with this condition more frequently in the IRF: the acute care hospital record from the stay preceding the IRF stay. We believe that the acute care hospitals are not likely to be influenced by IRF PPS policies that only affect IRF payments (that is, changes in IRF payment policies would not likely result in monetary benefits to the acute care hospitals). Thus, if RAND found a substantial increase in the number of IRF patients with a pulmonary condition in the acute care hospital before going to the IRF, it would be reasonable to assume that more patients with a pulmonary condition were going to IRFs (a real increase in case mix). However, if there was little change in the number of IRF patients with a pulmonary condition in the acute care hospital before going to the IRF, then we believe it is reasonable to assume that a portion of the increase in patients with a pulmonary condition in IRFs was due to the incentives to code more of these patients in the IRFs.

We believe that this first approach shows that both factors, real case mix change and coding change, contributed to the amount of observed change in 2002, the first IRF PPS rate year. However, these estimates (based on the best available data) do not fully address all of the variables that may have contributed to the change in case mix. For example, the model does not account for the possibility that patients could develop impairments, functional problems, or comorbidities after they leave the acute care hospital (prior to the IRF admission) that would make them more costly when they are in the IRF. We note that the introduction of a new payment system may have interrelated effects on providers as they adapt to new (or perceived) program incentives. Thus, an analysis of first year experience may not be fully representative of providers' behavior under a fully implemented system. In addition, hospital coding practices may change at a different rate in facilities where the IRF is a unit of an acute care hospital compared with freestanding IRF hospitals. Finally, we want to ensure that the rate reduction will not have an adverse effect on beneficiaries' access to IRF care.

For the reasons described above, we believed and continue to believe that we should provide some flexibility to account for the possibility that some of the observed changes may be attributable to other than coding changes. Thus, in determining the amount of the reduction in the standard payment amount, we examined RAND's second approach that recognizes the difficulty of precise measurement of real case mix and coding changes. Using this second approach, RAND developed an analytical procedure that allowed them to distinguish more fully between real case mix change and coding change based on patient characteristics. In part, this second approach involves analyzing some specific examples of coding that we know have changed over time, such as direct indications of improvements in impairment coding, changes in coding instruction for bladder and bowel functioning, and dramatic increases in coding of certain conditions that affect patients' placement into tiers (resulting in higher payments).

Using the two approaches, RAND found that real case mix changes in IRFs over this period ranged from a decrease of 2.4 percent (using the first approach) to an increase of 1.5 percent (using the second approach). This suggests that coding changes accounted for between 1.9 percent (if real case mix increased by 1.5 percent (that is, 3.4 percent minus 1.5 percent)) and 5.8 percent (if real case mix decreased by 2.4 percent (that is, 3.4 percent plus 2.4 percent)) of the increase in aggregate payments for 2002 compared with 1999. Thus, RAND recommended decreasing the standard per discharge payment amount by between 1.9 and 5.8 percent to adjust for the coding changes. We proposed to reduce the standard payment amount by the lower of these two numbers, 1.9 percent, because we believe it is a reasonable estimate for the amount of coding change, based on RAND's analysis of direct indications of coding change. That is, RAND analyzed specific examples of coding that we know have changed over time, such as direct indications of improvements in impairment coding, changes in coding instructions for bladder and bowel functioning, and dramatic increases in coding of certain conditions that affect patients' placement into tiers (resulting in higher payments) in deriving the 1.9 percent estimate.

We considered proposing a reduction to the standard payment amount by an amount up to 5.8 percent because RAND's first approach suggested that coding changes could possibly have been responsible for up to 5.8 percent of the observed increase in IRFs' case mix. Furthermore, a separate analysis by RAND found that if all IRFs had been paid based on 100 percent of the IRF PPS payment rates throughout all of 2002 (some IRFs were still transitioning to PPS payments during 2002), PPS payments during 2002 would have been 17 percent higher than IRFs' costs. This suggests that we could have proposed a reduction greater than 1.9 and up to 5.8 percent.

We decided to propose a reduction of 1.9 percent, the lowest possible amount of change attributable to coding change. The analyses described here are only the first of an ongoing series of studies to evaluate the existence and extent of payment increases due to coding changes. We will continue to review the need for any further reduction in the standard payment amount in subsequent years as part of our overall monitoring and evaluation of the IRF PPS.

Therefore, for FY 2006, we proposed to reduce the standard payment amount by the lowest amount (1.9 percent) attributable to coding changes. We believe this approach, which is supported by RAND's analysis of the data, will adequately adjust for the increased payments to IRFs caused by purely coding changes, but will still provide the flexibility to account for the possibility that some of the observed changes in case mix may be attributed to other than coding changes. Furthermore, we chose to propose a 1.9 percent reduction in the standard payment amount to recognize that IRFs' current cost structures may be changing as they strive to comply with other recent Medicare policy changes, such as the criteria for IRF classification commonly known as the ''75 percent rule.''

Public comments and our responses on the proposed reduction of the standard payment amount to account for coding changes are summarized below.

Comment: Several commenters objected to CMS implementing an across the board reduction to payment rates to account for coding changes until the full impact of CMS's recent decision to enforce the 75 percent rule is known. These commenters generally also noted that RAND's analysis was based on 2002 data, which was the year facilities were transitioning to the IRF PPS.

Response: We believe a 1.9 percent reduction to the standard payment amount to account for coding changes is appropriate at this time for the following reasons. First, CMS is required by statute (section 1886(j)(2)(C)(ii) of the Act) to adjust payment rates for IRF services if we find evidence that changes in coding (that do not reflect real changes in case mix) have resulted or will result in changes in aggregate payments under the IRF classification system. As discussed in the proposed rule and above, CMS contracted with RAND to examine changes in case mix and coding since the IRF PPS, using the most current available data. Using regression analysis of calendar year 2002 data, RAND found that payments to IRFs were about $140 million more than expected during 2002 because of changes in the classification of patients in IRFs, and that a portion of this increase in payments was due to coding changes that do not reflect real changes in case mix. Specifically, RAND found that IRF payments were at least 1.9 percent higher because of changes in coding, based on direct indications of coding changes. Thus, we believe we have a responsibility to conform to the requirements of the statute and accordingly adjust payment rates for IRFs.

Second, analyses by RAND and by CMS's Office of the Actuary have both shown high Medicare margins among IRFs since implementation of the IRF PPS. RAND's analysis found that if all IRFs had been paid based on 100 percent of the IRF PPS payment rates throughout all of 2002 (some IRFs were still transitioning to PPS payments during 2002), PPS payments during 2002 would have been 17 percent higher than IRFs' costs. An analysis by CMS's

Office of the Actuary supports these results. Given the evidence of high Medicare margins among IRFs, we believe that a 1.9 percent decrease in rates to account for coding changes will not affect beneficiary access to IRF services because IRFs will continue to be paid adequately to reflect the cost of resources needed to treat Medicare beneficiaries.

Furthermore, we continue to find evidence that enforcement of the 75 percent rule between July 2004 and July 2005 at the 50 percent compliance threshold did not have as large an impact on patients' access to IRF care as some industry analysts contend. At this time, CMS is finding no significant problems regarding access to care in IRFs; to the contrary, the trend is toward increasing utilization in all settings. For example, when we compared calendar years 2003 to 2004, we found that the number of IRF cases increased about 1.2 percent. We do not believe that beneficiary access to rehabilitation care will be unduly affected when IRFs have to meet a compliance threshold of 60 percent for cost reporting periods starting between July 1, 2005 and June 30, 2006. Based on the current available evidence, we do not believe that simultaneously reducing the standard payment amount by 1.9 percent to adjust for coding changes and phasing in enforcement of the 75 percent rule will have an undue effect on beneficiary access to IRF services. However, we will closely monitor the available data to ensure that beneficiaries' access to rehabilitation care is maintained.

Finally, we believe that the fact that 2002 was the year IRFs were transitioning to the IRF PPS further supports the finding that at least 1.9 percent of the payments in that year were due to coding changes and not to real changes in case mix. IRFs had not fully transitioned to the full Federal payment rates in 2002. Therefore, they were likely only beginning to adjust to the new incentives of the IRF PPS and had only begun changing their coding practices. Had the full Federal payment rates for 2002 been fully implemented in 2002, then providers might have changed their coding practices even more than they did in 2002.

Accordingly, RAND was likely only observing the initial provider responses to the new IRF PPS. Because RAND's estimate of the 1.9 percent is based on direct indication of coding changes that occurred in 2002, we believe that the 1.9 percent proposed reduction to the standard payment amount is appropriate at this time. In the future, we will examine later years of data in which providers were fully subject to the IRF PPS and make any necessary adjustments to the standard payment amount as we are required to do by statute to eliminate the effect on payments of coding or classification changes that do not reflect real changes in case mix.

Comment: A few commenters questioned RAND's assumption that characteristics of the patients recorded during the acute hospitalizations preceding the IRF stays are relevant for the condition of those same patients in the IRF stays.

Response: RAND's methodology in which they assumed that patient characteristics recorded during the acute hospitalizations preceding the IRF stays were relevant for the case mix of patients in the IRF stays produced a much higher estimate of the amount of coding change than we proposed to adopt in the FY 2006 proposed rule (70 FR 30188, 30221 though 30222). This methodology suggested a 5.8 percent reduction to the standard payment amount to account for coding change, as discussed above. As explained in the FY 2006 proposed rule (70 FR 30188, 30222), we used the estimate of the amount of coding change from RAND's second approach, which involved analyzing specific examples of coding that we know have changed over time, such as direct indications of improvements in impairment coding, changes in coding instructions for bladder and bowel functioning, and dramatic increases in coding of certain conditions that affect patients' placement into tiers (resulting in higher payments). This second approach produced the 1.9 percent estimate we proposed to use to adjust the standard payment amount.

Comment: One commenter requested that CMS conduct educational efforts for providers that instruct providers on how to code patients appropriately, rather than reducing the standard payment amount by 1.9 percent.

Response: As we discussed earlier in detail in this final rule under section VI.A, we proposed to reduce the standard payment amount by 1.9 percent to account for the effects of coding changes that occurred between 1999 and 2002 that resulted in higher than expected payments to IRFs, beginning in 2002. Section 1886(j)(2)(C)(ii) of the Act requires the Secretary to make such an adjustment to eliminate the effects of coding or classification changes that do not reflect real changes in case mix if the Secretary determines that changes in coding or classification of patients have resulted or will result in changes in aggregate payments under the classification system. RAND's regression analysis of calendar year 2002 data found that payments to IRFs were about $140 million more than expected during 2002 because of changes in the classification of patients in IRFs, and that a portion of this increase was due to coding changes that do not reflect real changes in case mix. Any provider education and training that CMS would conduct now would not revise RAND's finding that, based upon calendar year 2002 data, coding changes occurred that did not reflect real changes in case mix.

However, we agree with the commenter that provider education and training is important so that providers correctly code patients in IRFs. For this reason, CMS conducted extensive provider training in 2002 when the IRF PPS was first implemented, and we will continue to educate providers as to how to code the IRF–PAI items through our IRF–PAI coding help desk. We are open to considering other methods of provider education to encourage accurate provider coding. The primary resource providers should refer to is the IRF–PAI manual when they have questions regarding the correct way to code patients in IRFs. This manual is available on CMS's Web site at *http://www.cms.hhs.gov/providers/IRFPPS/IRFPAI-MANUAL040104.asp* and is updated regularly. The 1.9 percent reduction adjustment to the standard payment amount is not intended to penalize providers for coding changes, but to reflect the statutory mandate to adjust IRF PPS payments when the Secretary determines that changes in coding or classification of patients have resulted or will result in changes in aggregate payments under the classification system.

Comment: One commenter questioned whether, in doing the analysis described above, RAND accounted for the 1.16 percent behavioral offset adjustment that CMS applied to the initial IRF PPS payment rates in the August 7, 2001 final rule (66 FR 41316).

Response: As explained in detail in RAND's report entitled ''Preliminary Analyses of Changes in Coding and Case Mix Under the Inpatient Rehabilitation Facility Prospective Payment System'' (available on RAND's Web site at *http://www.rand.org/publications/TR/TR213/*), RAND accounted for the 1.16 percent behavioral offset adjustment when they estimated the amount of observed case mix change that was due to real case mix change and the amount that was due to coding change. The range of estimates for the amount of case mix and coding change that RAND developed and that is reported above in this final rule contains an adjustment to

account for this behavioral offset. If RAND had not taken account of the behavioral offset, their estimates of the amount of observed case mix change that was due to coding change would have been larger than noted in both the FY 2006 proposed rule (70 FR 30188) and in this final rule.

Comment: One commenter suggested that the proposed 1.9 percent reduction of the standard payment amount could be implemented without undue hardship for facilities.

Response: We agree with the commenter. RAND estimates that if all IRFs had been paid based on 100 percent of the IRF PPS payment rates throughout all of 2002 (some IRFs were still transitioning to PPS payments during 2002), PPS payments during 2002 would have been 17 percent higher than IRFs' costs. This suggests that IRF payments are likely more than adequate to support this type of adjustment for coding changes.

Final Decision: After carefully considering all the comments we received on the proposed 1.9 percent reduction to the standard payment amount to adjust for coding changes between 1999 and 2002 that did not reflect real changes in case mix and resulted in increases in aggregate payments under the IRF classification system, we are finalizing our proposal to adopt the adjustment described above. In accordance with section 1886(j)(2)(C)(ii) of the Act, and based on RAND's analysis of 2002 data compared with 1999 data, we believe this change is necessary to allow payment amounts to accurately reflect changes in IRFs' patient case mix (that is, the true cost of treating patients), and to ensure that they are not influenced by changes in coding practices.

We are finalizing our methodology for reducing the standard payment amount by 1.9 percent. First, we update the FY 2005 standard payment conversion factor by the estimated FY 2006 market basket of 3.6 percent (estimated for this final rule) to get the standard payment amount for FY 2006 ($12,958*1.036 = $13,425). Next, we multiply the FY 2006 standard payment amount by 0.981, which reduces the standard payment amount by 1.9 percent ($13,425*0.981 = $13,169). In section VI.B.7 of this final rule, we will further adjust the $13,169 by the budget neutrality factors for the wage index and the other final changes outlined in this final rule that will result in the FY 2006 standard payment conversion factor. In section VI.B.7 of this final rule, we provide a step-by-step calculation that results in the FY 2006 standard payment conversion factor.

B. Adjustments To Determine the FY 2006 Standard Payment Conversion Factor

1. Market Basket Used for IRF Market Basket Index

Under the broad authority of section 1886(j)(3)(C) of the Act, the Secretary establishes an increase factor that reflects changes over time in the prices of an appropriate mix of goods and services included in covered IRF services, which is referred to as a market basket index. The market basket needs to include both operating and capital. Thus, although the Secretary is required to develop an increase factor under section 1886(j)(3)(C) of the Act, this provision gives the Secretary discretion in the design of such factor.

The index currently used to update payments for rehabilitation facilities is the excluded hospital including capital market basket. This market basket is based on 1997 Medicare cost report data and includes Medicare-participating rehabilitation (IRF), LTCH, psychiatric (IPF), cancer, and children's hospitals.

We are unable to create a separate market basket specifically for rehabilitation hospitals due to the small number of facilities and the limited data that are provided (for instance, only about 25 percent of rehabilitation facility cost reports reported contract labor cost data for 2002). Since all IRFs are paid under the IRF PPS, nearly all LTCHs are paid under the LTCH PPS, and IPFs for cost reporting periods beginning on or after January 1, 2005 will be paid under the IPF PPS, in the FY 2006 proposed rule (70 FR 30188), we proposed and are finalizing to update payments for rehabilitation facilities using a market basket reflecting the operating and capital cost structures for IRFs, IPFs, and LTCHs, hereafter referred to as the RPL (rehabilitation, psychiatric, long-term care) market basket. As proposed and for this final rule, we are excluding children's and cancer hospitals from the RPL market basket because their payments are based entirely on reasonable costs subject to rate-of-increase limits established under the authority of section 1886(b) of the Act, which is implemented in § 413.40 of the regulations. They are not reimbursed under a prospective payment system. Also, the FY 2002 cost structures for children's and cancer hospitals are noticeably different than the cost structures of the IRFs, IPFs, and LTCHs. The services offered in IRFs, IPFs, and LTCHs are typically more labor-intensive then those offered in cancer and children's hospitals. Therefore, the compensation cost weights for IRFs, IPFs, and LTCHs are larger than those in cancer and children's hospitals. In addition, the depreciation cost weights for IRFs, IPFs, and LTCHs are noticeably smaller than those for children's and cancer hospitals.

In the following discussion, we provide a background on market baskets and describe the methodologies we proposed and are finalizing for purposes of determining the operating and capital portions of the FY 2002-based RPL market basket.

a. Overview of the RPL Market Basket

The RPL market basket is a fixed weight, Laspeyres-type price index that is constructed in three steps. First, a base period is selected (in this case, FY 2002), and total base period expenditures are estimated for a set of mutually exclusive and exhaustive spending categories based upon type of expenditure. Then the proportion of total operating costs that each category represents is determined. These proportions are called cost or expenditure weights. Second, each expenditure category is matched to an appropriate price or wage variable, referred to as a price proxy. In nearly every instance, these price proxies are price levels derived from publicly available statistical series that are published on a consistent schedule, preferably at least on a quarterly basis.

Finally, the expenditure weight for each cost category is multiplied by the level of its respective price proxy for a given period. The sum of these products (that is, the expenditure weights multiplied by their price levels) for all cost categories yields the composite index level of the market basket in a given period. Repeating this step for other periods produces a series of market basket levels over time. Dividing an index level for a given period by an index level for an earlier period produces a rate of growth in the input price index over that time period.

A market basket is described as a fixed-weight index because it answers the question of how much it would cost, at another time, to purchase the same mix of goods and services purchased to provide hospital services in a base period. The effects on total expenditures resulting from changes in the quantity or mix of goods and services (intensity) purchased subsequent to the base period are not measured. In this manner, the market basket measures only the pure price change. Only when the index is rebased would the quantity and intensity effects be captured in the cost weights. Therefore, we rebase the market basket periodically so the cost weights reflect changes in the mix of

goods and services that hospitals purchase (hospital inputs) to furnish patient care between base periods.

The terms rebasing and revising, while often used interchangeably, actually denote different activities. Rebasing means moving the base year for the structure of costs of an input price index (for example, we are shifting the base year cost structure from FY 1997 to FY 2002). Revising means changing data sources, methodology, or price proxies used in the input price index. We are rebasing and revising the market basket used to update the IRF PPS.

b. Methodology for Operating Portion of the RPL Market Basket

As proposed, the operating portion of the FY 2002-based RPL market basket, which is being adopted in this final rule, consists of several major cost categories derived from the FY 2002 Medicare cost reports for IRFs, IPFs, and LTCHs: Wages, drugs, professional liability insurance and a residual. We choose FY 2002 as the base year because we believe this is the most recent, relatively complete year of Medicare cost report data. Due to insufficient Medicare cost report data for IRFs, IPFs, and LTCHs, cost weights for benefits, contract labor, and blood and blood products were developed using the FY 2002-based IPPS market basket (Section IV. Rebasing and Revision of the Hospital Market Baskets IPPS Hospital Rule for FY 2006), which we explain in more detail later in this section. For example, less than 30 percent of IRFs, IPFs, and LTCHs reported benefit cost data in FY 2002. We have noticed an increase in cost data for these expense categories over the last 4 years. The next time we propose to rebase the RPL market basket, there may be sufficient IRFs, IPFs, and LTCHs cost report data to develop the weights for these expenditure categories.

Since the cost weights for the RPL market basket are based on facility costs, as proposed and for this final rule, we are limiting our sample to hospitals with a Medicare average length of stay within a comparable range of the total facility average length of stay. We believe this provides a more accurate reflection of the structure of costs for Medicare treatments. Our goal is to measure cost shares that are reflective of case mix and practice patterns associated with providing services to Medicare beneficiaries.

As proposed, for this final rule, we are using those cost reports for IRFs and LTCHs whose Medicare average length of stay is within 15 percent (that is, 15 percent higher or lower) of the total facility average length of stay for the hospital. This is the same edit applied to the FY 1992 and FY 1997 excluded hospital with capital market baskets. We are using 15 percent because it includes those LTCHs and IRFs whose Medicare LOS is within approximately 5 days of the facility length of stay.

As proposed, for this final rule, we use a less stringent measure of Medicare length of stay for IPFs whose average length of stay is within 30 or 50 percent (depending on the total facility average length of stay) of the total facility length of stay. This less stringent edit allows us to increase our sample size by over 150 reports and produce a cost weight more consistent with the overall facility. The edit we applied to IPFs when developing the FY-1997 based excluded hospital with capital market basket was based on the best available data at the time.

The detailed cost categories under the residual (that is, the remaining portion of the market basket after excluding wages and salaries, drugs, and professional liability cost weights) are derived from the FY 2002-based IPPS market basket and the 1997 Benchmark Input-Output Tables published by the Bureau of Economic Analysis, U.S. Department of Commerce. The FY 2002-based IPPS market basket is developed using FY 2002 Medicare hospital cost reports with the most recent and detailed cost data. The 1997 Benchmark I–O is the most recent, comprehensive source of cost data for all hospitals. Consistent with the proposed rule, cost weights for benefits, contract labor, and blood and blood products for this final rule were derived using the FY 2002-based IPPS market basket. For example, the ratio of the benefit cost weight to the wages and salaries cost weight in the FY 2002-based IPPS market basket was applied to the RPL wages and salaries cost weight to derive a benefit cost weight for the RPL market basket. As proposed and for this final rule, the remaining operating cost categories were derived using the 1997 Benchmark Input-Output Tables aged to 2002 using relative price changes. (The methodology we used to age the data involves applying the annual price changes from the price proxies to the appropriate cost categories. We repeat this practice for each year.) Therefore, this methodology results in roughly 59 percent of the RPL market basket is accounted for by wages, drugs and professional liability insurance data from FY 2002 Medicare cost report data for IRFs, LTCHs, and IPFs.

Table 5 below sets forth the complete FY 2002-based RPL market basket including cost categories, weights, and price proxies. For comparison purposes, the corresponding FY 1997-based excluded hospital with capital market basket is listed as well.

As proposed and for this final rule, wages and salaries are 52.895 percent of total costs for the FY 2002-based RPL market basket compared to 47.335 percent for FY 1997-based excluded hospital with capital market basket. Employee benefits are 12.982 percent for the FY 2002-based RPL market basket compared to 10.244 percent for FY 1997-based excluded hospital with capital market basket. As a result, compensation costs (wages and salaries plus employee benefits) for the FY 2002-based RPL market basket are 65.877 percent of costs compared to 57.579 percent for the FY 1997-based excluded hospital with capital market basket. Of the 8 percentage point difference between the compensation shares, approximately 3 percentage points are due to the new base year (FY 2002 instead of FY 1997), 3 percentage points are due to the revised length of stay edit and the remaining 2 percentage points are due to the exclusion of other hospitals (that is, only including IRFs, IPFs, and LTCHs in the market basket).

Following the table is a summary outlining the choice of the proxies that we proposed and we are finalizing for the operating portion of the RPL market basket. The price proxies for the capital portion are described in more detail in the capital methodology section. (See section III.B.1.c of this rule.)

TABLE 5.—FY 2002-BASED RPL MARKET BASKET COST CATEGORIES, WEIGHTS AND PROXIES WITH FY 1997-BASED EXCLUDED HOSPITAL WITH CAPITAL MARKET BASKET USED FOR COMPARISON

Expense categories	FY 1997-based excluded hospital with capital market basket	FY 2002-based RPL market basket	FY 2002 RPL market basket price proxies
Total	100.000	100.000	
Compensation	57.579	65.877	
Wages and Salaries *	47.335	52.895	ECI—Wages and Salaries, Civilian Hospital Workers.
Employee Benefits *	10.244	12.982	ECI—Benefits, Civilian Hospital Workers.
Professional fees Non-Medical *	4.423	2.892	ECI—Compensation for Professional, Specialty & Technical Workers.
Utilities	1.180	0.656	
Electricity	0.726	0.351	PPI—Commercial Electric Power.
Fuel Oil, Coal, etc.	0.248	0.108	PPI Refined Petroleum Products.
Water and Sewage	0.206	0.197	CPI–U—Water & Sewage Maintenance.
Professional Liability Insurance	0.733	1.161	CMS—Professional Liability Premium Index.
All Other Products and Services	27.117	19.265	
All Other Prod. Products	17.914	13.323	
Pharmaceuticals	6.318	5.103	PPI Prescription Drugs.
Food: Direct Purchase	1.122	0.873	PPI Processed Foods & Feeds.
Food: Contract Service	1.043	0.620	CPI–U Food Away From Home.
Chemicals	2.133	1.100	PPI Industrial Chemicals.
Blood and Blood Products **	0.748	.....	
Medical Instruments	1.795	1.014	PPI Medical Instruments & Equipment.
Photographic Supplies	0.167	0.096	PPI Photographic Supplies.
Rubber and Plastics	1.366	1.052	PPI Rubber & Plastic Products.
Paper Products	1.110	1.000	PPI Converted Paper & Paperboard Products.
Apparel	0.478	0.207	PPI Apparel.
Machinery and Equipment	0.852	0.297	PPI Machinery & Equipment.
Miscellaneous Products	0.783	1.963	PPI Finished Goods less Food and Energy.
All Other Services	9.203	5.942	
Telephone	0.348	0.240	CPI–U—Telephone Services.
Postage	0.702	0.682	CPI–U—Postage.
All Other: Labor Intensive*	4.453	2.219	ECI—Compensation for Private Service Occupations.
All Other: Non-Labor Intensive	3.700	2.800	CPI–U All Items.
Capital-Related Costs	8.968	10.149	
Depreciation	5.586	6.186	
Fixed Assets	3.503	4.250	Boeckh Institutional Construction: 23 year useful life.
Movable Equipment	2.083	1.937	WPI—Machinery & Equipment: 11 year useful life.
Interest Costs	2.682	2.775	
Non-profit	2.280	2.081	Average yield on domestic municipal bonds (Bond Buyer 20 bonds)—vintage weighted (23 years).
For-profit	0.402	0.694	Average yield on Moody's Aaa bonds—vintage weighted (23 years).
Other Capital-Related Costs	0.699	1.187	CPI–U—Residential Rent.

* Labor-related.
** Blood and blood related products is included in miscellaneous products.
Note: Due to rounding, weights may not sum to total.

Below we provide the proxies that we are using for the FY 2002-based RPL market basket in this final rule. We made no changes to the proposed price proxies in this final rule. With the exception of the Professional Liability proxy, all the price proxies for the operating portion of the RPL market basket are based on Bureau of Labor Statistics (BLS) data and are grouped into one of the following BLS categories:

• Producer Price Indexes—Producer Price Indexes (PPIs) measure price changes for goods sold in other than retail markets. PPIs are preferable price proxies for goods that hospitals purchase as inputs in producing their outputs because the PPIs would better reflect the prices faced by hospitals. For example, we use a special PPI for prescription drugs, rather than the Consumer Price Index (CPI) for prescription drugs because hospitals generally purchase drugs directly from the wholesaler. The PPIs that we use measure price change at the final stage of production.

• Consumer Price Indexes—Consumer Price Indexes (CPIs) measure change in the prices of final goods and services bought by the typical consumer. Because they may not represent the price faced by a producer, we used CPIs only if an appropriate PPI was not available, or if the expenditures were more similar to those of retail consumers in general rather than purchases at the wholesale level. For example, the CPI for food purchased away from home is used as a proxy for contracted food services.

• Employment Cost Indexes—Employment Cost Indexes (ECIs) measure the rate of change in employee wage rates and employer costs for employee benefits per hour worked. These indexes are fixed-weight indexes and strictly measure the change in wage

rates and employee benefits per hour. Appropriately, they are not affected by shifts in employment mix.

We evaluated the price proxies using the criteria of reliability, timeliness, availability, and relevance. Reliability indicates that the index is based on valid statistical methods and has low sampling variability. Timeliness implies that the proxy is published regularly, at least once a quarter. Availability means that the proxy is publicly available. Finally, relevance means that the proxy is applicable and representative of the cost category weight to which it is applied. The CPIs, PPIs, and ECIs selected by us to be used in this regulation meet these criteria.

We note that the proxies are the same as those used for the FY 1997-based excluded hospital with capital market basket. Because these proxies meet our criteria of reliability, timeliness, availability, and relevance, we believe they continue to be the best measure of price changes for the cost categories. For further discussion on the FY 1997-based excluded hospital with capital market basket, see the IPPS final rule (67 FR at 50042), published in the **Federal Register** on August 1, 2002.

Wages and Salaries

For measuring the price growth in the FY 2002-based RPL market basket, we use the ECI for wages and salaries for civilian hospital workers as the proxy for wages for measuring the price growth of wages in the FY 2002-based RPL market basket.

Employee Benefits

The FY 2002-based RPL market basket uses the ECI for employee benefits for civilian hospital workers.

Nonmedical Professional Fees

The ECI for compensation for professional and technical workers in private industry is applied to this category since it includes occupations such as management and consulting, legal, accounting and engineering services.

Fuel, Oil, and Gasoline

The percentage change in the price of gas fuels as measured by the PPI (Commodity Code #0552) is applied to this component.

Electricity

The percentage change in the price of commercial electric power as measured by the PPI (Commodity Code #0542) is applied to this component.

Water and Sewerage

The percentage change in the price of water and sewage maintenance as measured by the Consumer Price Index (CPI) for all urban consumers (CPI Code # CUUR0000SEHG01) is applied to this component.

Professional Liability Insurance

The FY 2002-based RPL market basket uses the percentage change in the hospital professional liability insurance (PLI) premiums as estimated by the CMS Hospital professional liability index for the proxy of this category. In the FY 1997-based excluded hospital with capital market basket, the same price proxy was used.

We continue to research options for improving our proxy for professional liability insurance. This research includes exploring various options for expanding our current survey, including the identification of another entity that would be willing to work with us to collect more complete and comprehensive data. We are also exploring other options such as third party or industry data that might assist us in creating a more precise measure of PLI premiums. At this time we have not identified a preferred option, therefore, no change is implemented in the proxy in this final rule.

Pharmaceuticals

The percentage change in the price of prescription drugs as measured by the PPI (PPI Code #PPI32541DRX) is used as a proxy for this category. This is a special index produced by BLS and is the same proxy used in the 1997-based excluded hospital with capital market basket.

Food, Direct Purchases

The percentage change in the price of processed foods and feeds as measured by the PPI (Commodity Code #02) is applied to this component.

Food, Contract Services

The percentage change in the price of food purchased away from home as measured by the CPI for all urban consumers (CPI Code #CUUR0000SEFV) is applied to this component.

Chemicals

The percentage change in the price of industrial chemical products as measured by the PPI (Commodity Code #061) is applied to this component. While the chemicals hospital's purchase include industrial as well as other types of chemicals, the industrial chemicals component constitutes the largest proportion by far. Thus, we believe that commodity Code #061 is the appropriate proxy.

Medical Instruments

The percentage change in the price of medical and surgical instruments as measured by the PPI (Commodity Code #1562) is applied to this component.

Photographic Supplies

The percentage change in the price of photographic supplies as measured by the PPI (Commodity Code #1542) is applied to this component.

Rubber and Plastics

The percentage change in the price of rubber and plastic products as measured by the PPI (Commodity Code #07) is applied to this component.

Paper Products

The percentage change in the price of converted paper and paperboard products as measured by the PPI (Commodity Code #0915) is used.

Apparel

The percentage change in the price of apparel as measured by the PPI (Commodity Code #381) is applied to this component.

Machinery and Equipment

The percentage change in the price of machinery and equipment as measured by the PPI (Commodity Code #11) is applied to this component.

Miscellaneous Products

The percentage change in the price of all finished goods less food and energy as measured by the PPI (Commodity Code #SOP3500) is applied to this component. Using this index removes the double-counting of food and energy prices, which are captured elsewhere in the market basket. The weight for this cost category is higher than in the 1997-based index because the weight for blood and blood products (1.322) is added to it. In the 1997-based excluded hospital with capital market basket we included a separate cost category for blood and blood products, using the BLS Producer Price Index for blood and derivatives as a price proxy. A review of recent trends in the PPI for blood and derivatives suggests that its movements may not be consistent with the trends in blood costs faced by hospitals. While this proxy did not match exactly with the product hospitals are buying, its trend over time appears to be reflective of the historical price changes of blood purchased by hospitals. However, an apparent divergence in trends in the PPI for blood and derivatives and trends in blood costs faced by hospitals over recent years led us to reevaluate whether the PPI for blood and derivatives was an appropriate measure

of the changing price of blood. As discussed in the FY 2006 proposed rule (70 FR 30188), we ran test market baskets classifying blood in 3 separate cost categories: Blood and blood products, contained within chemicals as was done for the 1992-based excluded hospital with capital market basket, and within miscellaneous products. These categories use as proxies the following PPIs: the PPI for blood and blood products, the PPI for chemicals, and the PPI for finished goods less food and energy, respectively. Of these three proxies, the PPI for finished goods less food and energy moved most like the recent blood cost and price trends. In addition, the impact on the overall market basket by using different proxies for blood was negligible, mostly due to the relatively small weight for blood in the market basket.

Therefore, as proposed, for this final rule, we are using the PPI for finished goods less food and energy for the blood proxy because we believe it would best be able to proxy only price changes rather than nonprice factors such as changes in quantities or required tests associated with blood purchased by hospitals. We will continue to evaluate this proxy for its appropriateness and will explore the development of alternative price indexes to proxy the price changes associated with this cost.

Telephone

The percentage change in the price of telephone services as measured by the CPI for all urban consumers (CPI Code #CUUR0000SEED) is applied to this component.

Postage

The percentage change in the price of postage as measured by the CPI for all urban consumers (CPI Code #CUUR0000SEEC01) is applied to this component.

All Other Services, Labor Intensive

The percentage change in the ECI for compensation paid to service workers employed in private industry is applied to this component.

All Other Services, Nonlabor Intensive

The percentage change in the all-items component of the CPI for all urban consumers (CPI Code #CUUR0000SA0) is applied to this component.

c. Methodology for Capital Portion of the RPL Market Basket

Unlike for the operating costs of the FY 2002-based RPL market basket, we did not have IRFs, IPFs, and LTCHs FY 2002 Medicare cost report data for the capital cost weights, due to a change in the FY 2002 cost reporting requirements. Rather, as was proposed, for this final rule we are using these hospitals' expenditure data for the capital cost categories of depreciation, interest, and other capital expenses for the most recent year available (FY 2001), and aging the data to a FY 2002 base year using relevant price proxies.

As proposed, for this final rule we calculated weights for the RPL market basket capital costs using the same set of Medicare cost reports used to develop the operating share for IRFs, IPFs, and LTCHs. As proposed, for this final rule the resulting capital weight for the FY 2002 base year is 10.149 percent. This is based on FY 2001 Medicare cost report data for IRFs, IPFs, and LTCHs, aged to FY 2002 using relevant price proxies.

Lease expenses are not a separate cost category in the market basket, but are distributed among the cost categories of depreciation, interest, and other, reflecting the assumption that the underlying cost structure of leases is similar to capital costs in general. We assumed 10 percent of lease expenses are overhead and assigned them to the other capital expenses cost category as overhead. We base this assignment of 10 percent of lease expenses to overhead on the common assumption that overhead is 10 percent of costs. The remaining lease expenses were distributed to the three cost categories based on the weights of depreciation, interest, and other capital expenses not including lease expenses.

Depreciation contains two subcategories: Building and fixed equipment and movable equipment. As proposed, for this final rule the split between building and fixed equipment and movable equipment was determined using the FY 2001 Medicare cost reports for IRFs, IPFs, and LTCHs. This methodology was also used to compute the 1997-based index (67 FR at 50044).

As proposed, for this final rule total interest expense cost category is split between the government/nonprofit and for-profit hospitals. The 1997-based excluded hospital with capital market basket allocated 85 percent of the total interest cost weight to the government/nonprofit interest, proxied by average yield on domestic municipal bonds, and 15 percent to for-profit interest, proxied by average yield on Moody's Aaa bonds.

As proposed, for this final rule we derived the split using the relative FY 2001 Medicare cost report data for IPPS hospitals on interest expenses for the government/nonprofit and for-profit hospitals. Due to insufficient Medicare cost report data for IRFs, IPFs and LTCHs, as proposed and for this final rule, we used the same split used in the IPPS capital input price index, which is 75–25. We believe it is important that this split reflects the latest relative cost structure of interest expenses for hospitals. Therefore, as proposed in the FY 2006 proposed rule (70 FR 30188) we are using a 75–25 split to allocate interest expenses to government/nonprofit and for-profit. See the IPPS Rule for FY 2006, Section IV.D, Capital Input Price Index Section (70 FR 23406).

Since capital is acquired and paid for over time, capital expenses in any given year are determined by both past and present purchases of physical and financial capital. The vintage-weighted capital index is intended to capture the long-term consumption of capital, using vintage weights for depreciation (physical capital) and interest (financial capital). These vintage weights reflect the purchase patterns of building and fixed equipment and movable equipment over time. Depreciation and interest expenses are determined by the amount of past and current capital purchases. Therefore, as proposed, for this final rule we are using the vintage weights to compute vintage-weighted price changes associated with depreciation and interest expense.

Vintage weights are an integral part of the FY 2002-based RPL market basket. Capital costs are inherently complicated and are determined by complex capital purchasing decisions, over time, based on such factors as interest rates and debt financing. In addition, capital is depreciated over time instead of being consumed in the same period it is purchased. The capital portion of the FY 2002-based RPL market basket reflects the annual price changes associated with capital costs, and is a useful simplification of the actual capital investment process. By accounting for the vintage nature of capital, we are able to provide an accurate, stable annual measure of price changes. Annual non-vintage price changes for capital are unstable due to the volatility of interest rate changes and, therefore, do not reflect the actual annual price changes for Medicare capital-related costs. The capital component of the FY 2002-based RPL market basket reflects the underlying stability of the capital acquisition process and provide hospitals with the ability to plan for changes in capital payments.

To calculate the vintage weights for depreciation and interest expenses, we need a time series of capital purchases for building and fixed equipment and movable equipment. We found no single source that provides the best time series of capital purchases by hospitals for all

of the above components of capital purchases. The early Medicare Cost Reports did not have sufficient capital data to meet this need because these data were not required. While the AHA Panel Survey provided a consistent database back to 1963, it did not provide annual capital purchases. The AHA Panel Survey provided a time series of depreciation expenses through 1997 which could be used to infer capital purchases over time. From 1998 to 2001, total hospital depreciation expenses were calculated by multiplying the AHA Annual Survey total hospital expenses by the ratio of depreciation to total hospital expenses from the Medicare cost reports. Beginning in 2001, the AHA Annual survey began collecting depreciation expenses. We hope to be able to use this data in any future rebasings.

In order to estimate capital purchases from AHA data on depreciation and interest expenses, the expected life for each cost category (building and fixed equipment, movable equipment, and debt instruments) is needed. Due to insufficient Medicare cost report data for IRFs, IPFs and LTCHs, as proposed, for this final rule, we are using FY 2001 Medicare cost reports for IPPS hospitals to determine the expected life of building and fixed equipment and movable equipment. We believe this data source reflects the latest relative cost structure of depreciation expenses for hospitals. The expected life of any piece of equipment can be determined by dividing the value of the asset (excluding fully depreciated assets) by its current year depreciation amount. This calculation yields the estimated useful life of an asset if depreciation were to continue at current year levels, assuming straight-line depreciation. From the FY 2001 Medicare cost reports for IPPS hospitals the expected life of building and fixed equipment was determined to be 23 years, and the expected life of movable equipment was determined to be 11 years.

Between the publication of the June 24, 2005 proposed rule and this final rule, we conducted a further review of the methodology used to derive the useful life of an asset. Based on this brief analysis into the capital cost structures of hospitals, we are not changing the expected life of fixed and moveable assets for the final rule.

As proposed, for this final rule, we are using the fixed and movable weights derived from FY 2001 Medicare cost reports for IRFs, IPFs and LTCHs to separate the depreciation expenses into annual amounts of building and fixed equipment depreciation and movable equipment depreciation. By multiplying the annual depreciation amounts by the expected life calculations from the FY 2001 Medicare cost reports, year-end asset costs for building and fixed equipment and movable equipment could be determined. We then calculated a time series back to 1963 of annual capital purchases by subtracting the previous year asset costs from the current year asset costs. From this capital purchase time series we were able to calculate the vintage weights for building and fixed equipment, movable equipment, and debt instruments. Each of these sets of vintage weights are explained in detail below.

As proposed, for this final rule, for building and fixed equipment vintage weights, the real annual capital purchase amounts for building and fixed equipment derived from the AHA Panel Survey were used. The real annual purchase amount was used to capture the actual amount of the physical acquisition, net of the effect of price inflation. This real annual purchase amount for building and fixed equipment was produced by deflating the nominal annual purchase amount by the building and fixed equipment price proxy, the Boeckh Institutional Construction Index. This is the same proxy used for the FY 1997-based excluded hospital with capital market basket. We believe this proxy continues to meet our criteria of reliability, timeliness, availability, and relevance. Since building and fixed equipment has an expected life of 23 years, the vintage weights for building and fixed equipment are deemed to represent the average purchase pattern of building and fixed equipment over 23-year periods. With real building and fixed equipment purchase estimates available back to 1963, sixteen 23-year periods are averaged to determine the average vintage weights for building and fixed equipment that are representative of average building and fixed equipment purchase patterns over time. Vintage weights for each 23-year period are calculated by dividing the real building and fixed capital purchase amount in any given year by the total amount of purchases in the 23-year period. This calculation is done for each year in the 23-year period, and for each of the sixteen 23-year periods. The average of each year across the sixteen 23-year periods is used to determine the 2002 average building and fixed equipment vintage weights.

As proposed, for this final rule, for movable equipment vintage weights, the real annual capital purchase amounts for movable equipment derived from the AHA Panel Survey were used to capture the actual amount of the physical acquisition, net of price inflation. This real annual purchase amount for movable equipment was calculated by deflating the nominal annual purchase amount by the movable equipment price proxy, the Producer Price Index for Machinery and Equipment. This is the same proxy used for the FY 1997-based excluded hospital with capital market basket. We believe this proxy, which meets our criteria, is the best measure of price changes for this cost category. Since movable equipment has an expected life of 11 years, the vintage weights for movable equipment are deemed to represent the average purchase pattern of movable equipment over 11-year periods. With real movable equipment purchase estimates available back to 1963, twenty-eight 11-year periods are averaged to determine the average vintage weights for movable equipment that are representative of average movable equipment purchase patterns over time. Vintage weights for each 11-year period are calculated by dividing the real movable capital purchase amount for any given year by the total amount of purchases in the 11-year period. This calculation is done for each year in the 11-year period, and for each of the twenty-eight 11-year periods. The average of each year across the twenty-eight 11-year periods is used to determine the FY 2002 average movable equipment vintage weights.

As proposed, for this final rule, for interest vintage weights, the nominal annual capital purchase amounts for total equipment (building and fixed, and movable) derived from the AHA Panel and Annual Surveys were used. Nominal annual purchase amounts were used to capture the value of the debt instrument. Since hospital debt instruments have an expected life of 23 years, the vintage weights for interest are deemed to represent the average purchase pattern of total equipment over 23-year periods. With nominal total equipment purchase estimates available back to 1963, sixteen 23-year periods are averaged to determine the average vintage weights for interest that are representative of average capital purchase patterns over time. Vintage weights for each 23-year period are calculated by dividing the nominal total capital purchase amount for any given year by the total amount of purchases in the 23-year period. This calculation is done for each year in the 23-year period and for each of the sixteen 23-year periods. The average of the sixteen 23-year periods is used to determine the FY 2002 average interest vintage weights. The vintage weights for the index are presented in Table 6 below.

In addition to the price proxies for depreciation and interest costs described above in the vintage weighted capital section, as proposed, for this final rule, we used the CPI–U for Residential Rent as a price proxy for other capital-related costs. The price proxies for each of the capital cost categories are the same as those used for the IPPS final rule (67 FR at 50044) capital input price index.

TABLE 6.—CMS FY 2002-BASED RPL MARKET BASKET CAPITAL VINTAGE WEIGHTS

Year	Fixed assets (23 year weights)	Movable assets (11 year weights)	Interest: capital-related (23 year weights)
1	0.021	0.065	0.010
2	0.022	0.071	0.012
3	0.025	0.077	0.014
4	0.027	0.082	0.016
5	0.029	0.086	0.019
6	0.031	0.091	0.023
7	0.033	0.095	0.026
8	0.035	0.100	0.029
9	0.038	0.106	0.033
10	0.040	0.112	0.036
11	0.042	0.117	0.039
12	0.045		0.043
13	0.047		0.048
14	0.049		0.053
15	0.051		0.056
16	0.053		0.059
17	0.056		0.062
18	0.057		0.064
19	0.058		0.066
20	0.060		0.070
21	0.060		0.071
22	0.061		0.074
23	0.061		0.076
Total	1.0000	1.0000	1.0000

The final FY 2006 update for IRF PPS using the FY 2002-based RPL market basket is 3.6 percent. This is based on Global Insight's 2nd quarter 2005 forecast, incorporating two more quarters of historical data than published in the FY 2006 IRF proposed rule. This includes increases in both the operating section and the capital section. Global Insight, Inc. is a nationally recognized economic and financial forecasting firm that contracts with CMS to forecast the components of the market baskets. Using the current FY 1997-based excluded hospital with capital market basket (66 FR at 41427), Global Insight's second quarter 2005 forecast for FY 2006 is also 3.6 percent. Table 7 below compares the FY 2002-based RPL market basket and the FY 1997-based excluded hospital with capital market basket percent changes. For both the historical and forecasted periods between FY 2000 and FY 2008, the difference between the two market baskets is minor with the exception of FY 2002 where the FY 2002-based RPL market basket increased three tenths of a percentage point higher than the FY 1997-based excluded hospital with capital market basket. This is primarily due to the FY 2002-based RPL market basket having a larger compensation (that is, the sum of wages and salaries and benefits) cost weight than the FY 1997-based index and the price changes associated with compensation costs increasing much faster than the prices of other market basket components. Also contributing is the all other nonlabor intensive cost weight, which is smaller in the FY 2002-based RPL market basket than in the FY 1997-based index, and the slower price changes associated with these costs.

TABLE 7.—FY 2002-BASED RPL MARKET BASKET AND FY 1997-BASED EXCLUDED HOSPITAL WITH CAPITAL MARKET BASKET PERCENT CHANGES, FY 2000–FY 2008

Fiscal year (FY)	Rebased FY 2002-based RPL market basket	FY 1997-based excluded hospital market basket with capital
Historical data:		
FY 2000	3.1	3.1
FY 2001	4.0	4.0
FY 2002	3.9	3.6
FY 2003	3.8	3.7
FY 2004	3.6	3.7
Average FYs 2000–2004	3.7	3.6
Forecast:		
FY 2005	3.8	3.9
FY 2006	3.6	3.6
FY 2007	3.2	3.1
FY 2008	3.1	2.9

TABLE 7.—FY 2002-BASED RPL MARKET BASKET AND FY 1997-BASED EXCLUDED HOSPITAL WITH CAPITAL MARKET BASKET PERCENT CHANGES, FY 2000–FY 2008—Continued

Fiscal year (FY)	Rebased FY 2002-based RPL market basket	FY 1997-based excluded hospital market basket with capital
Average FYs 2005–2008	3.4	3.4

Source: Global Insight, Inc. 2nd Qtr 2005, @USMACRO/CNTL0605 @CISSIM/TL0505.SIM.

Comment: One commenter recommended that the current update be increased to reflect the differences between the updates given in FY 2004 and FY 2005 and the final market basket increases. Another commenter recommended that CMS adopt a forecast error adjustment.

Response: There is currently no mechanism for adjusting for forecast error in the IRF PPS. Also, the FY 2005 updates is not based on historical data. The forecast error for FY 2005 will not be available until we publish the 2005q4 forecast (with historical data through 2005q3) version of the market basket. We have been actively working with our contractor to minimize forecast error. The specific details of our analysis are provided in the response to following comment.

Comment: Several commenters requested that CMS review and revise the methodology used to forecast the FY 2006 market basket. They are concerned that the proposed FY 2006 update of 3.1 percent is a dramatic underestimation. One commenter requested that CMS make the calculation of the projected FY 2006 available to the public.

Response: Before we published the FY 2006 proposed rule, we had been actively working with our forecasting firm, Global Insight, Inc. (GII), to improve the forecasting accuracy of the market baskets. GII is a nationally recognized economic and financial forecasting firm that contracts with CMS to forecast the components of the market baskets. Among other services GII provides to CMS, GII calculates projected inflation factors for price proxies using models that take into account sectoral, national, and global economic trends.

Over the last several years, dramatic fluctuations in the price of certain costs have made it difficult to forecast price proxy inflation. The driving force behind a significant portion of this uncertainty has been the instability of energy costs. With our input and consultation, however, GII recently re-evaluated and modified their forecasting models to help improve their forecasting accuracy. Using these improved forecasting models, GII calculated updated inflation factors for the major cost categories in Table 8.

TABLE 8.—COMPARISON OF THE 4 QUARTER MOVING AVERAGE PERCENT CHANGES FOR SEVERAL COST CATEGORY WEIGHTS BETWEEN THE FY 2006 PROPOSED AND FINAL RULES

Expense category	FY 2002-based cost weights	GII 2004q4 forecast of FY 2006 (Proposed Rule)	GII 2005q2 forecast of FY 2006 (Final Rule)
Total—RPL02	100.00	3.1	3.6
Compensation	65.877	3.5	3.9
Utilities	0.656	0.8	3.6
Professional Fees	2.892	3.6	3.8
Professional Liability Insurance	1.161	8.4	5.2
All Other	19.265	2.5	3.2
All Other Products	13.323	2.6	3.5
All Other Services	5.942	2.4	2.6
Capital	10.149	0.9	1.1

d. Labor-Related Share

Section 1886(j)(6) of the Act specifies that the Secretary shall adjust the proportion (as estimated by the Secretary from time to time) of rehabilitation facilities' costs which are attributable to wages and wage-related costs, of the prospective payment rates computed under paragraph (3) for area differences in wage levels by a factor (established by the Secretary) reflecting the relative hospital wage level in the geographic area of the rehabilitation facility compared to the national average wage level for such facilities. Not later than October 1, 2001 (and at least every 36 months thereafter), the Secretary shall update the factor under the preceding sentence on the basis of information available to the Secretary (and updated as appropriate) of the wages and wage-related costs incurred in furnishing rehabilitation services. Any adjustments or updates made under this paragraph for a fiscal year shall be made in a manner that assures that the aggregated payments under this subsection in the fiscal year shall be made in a manner that assures that the aggregated payments under this subsection in the fiscal year are not greater or less than those that would have been made in the year without such adjustment.

The labor-related share is determined by identifying the national average proportion of operating costs that are related to, influenced by, or vary with the local labor market. Using our current definition of labor-related, the labor-related share is the sum of the relative importance of wages and salaries, fringe benefits, professional fees, labor-intensive services, and a portion of the capital share from an appropriate market basket. As proposed, for this final rule, we are using the FY 2002-based RPL market basket costs to determine the labor-related share for the IRF PPS. The labor-related share for FY 2006 is the sum of the FY 2006 relative importance of each labor-related cost category, and reflects the different rates of price change for these cost categories between the base year (FY 2002) and FY 2006. For this final rule, we are revising the labor-related share to reflect Global Insight's second quarter 2005 forecast, incorporating two more quarters of

historical data than published in the FY 2006 IRF proposed rule. Thus, for this final rule, the sum of the relative importance for FY 2006 for operating costs (wages and salaries, employee benefits, professional fees, and labor-intensive services) is 71.708 percent, as shown in the chart below. The portion of capital that is influenced by local labor markets is estimated to be 46 percent, which is the same percentage currently used in the IRF prospective payment system. Since the relative importance for capital is 9.037 percent of the FY 2002-based RPL market basket in FY 2006, we took 46 percent of 9.037 percent to determine the capital labor-related share for FY 2006. The result is 4.157 percent, which we add to 71.708 percent for the operating cost amount to determine the total labor-related share for FY 2006. Thus, the labor-related share that we are using for IRF PPS in FY 2006 is 75.865 percent. This labor-related share is determined using the same methodology as employed in calculating all previous IRF labor-related shares (66 FR at 41357).

Table 9 below shows the final FY 2006 relative importance labor-related share using the 2002-based RPL market basket and the labor-related share using the FY 1997-based excluded hospital with capital market.

TABLE 9.—TOTAL LABOR-RELATED SHARE

Cost category	FY 2002-based RPL market basket relative importance (percent) FY 2006	FY 1997 excluded hospital with capital market basket relative importance (percent) FY 2006
Wages and salaries	52.592	48.185
Employee benefits	14.028	11.542
Professional fees	2.921	4.558
All other labor intensive services	2.167	4.450
Subtotal	71.708	68.735
Labor-related share of capital costs	4.157	3.289
Total	75.865	72.024

Public comments that we received are summarized below.

Comment: Several commenters objected to our proposal to change the labor-related share to 75.958 percent. One commenter suggested CMS maintain the FY 2005 labor-related share of 72.359 percent until CMS can develop an IRF-specific wage index. Another commenter stated there is no precedent to change the labor-related share. Another commenter requested that if CMS implemented a change in the LRS, they request a transition where the transitional labor-related share would be composed of 80 percent of the current labor-related share and 20 percent of the proposed labor-related share.

Response: Identical to previous updates, the labor-related share is calculated as the sum of the relative importance of those costs that are related to, influenced by, or vary with the local labor market. Specifically, the FY 2006 labor related share is equal to the relative importance of wages and salaries, fringe benefits, professional fees, labor-intensive services, and a portion of the capital share from the RPL market basket.

We calculate the labor-related relative importance for FY 2006 in four steps. First, we compute the FY 2006 price index level for the total market basket and each cost category of the market basket. Second, we calculate a ratio for each cost category by dividing the FY 2006 price index level for that cost category by the total market basket price index level. Third, we determine the FY 2006 relative importance for each cost category by multiplying this ratio by the base year (FY 2002) weight. Finally, we sum the FY 2006 relative importance for each of the labor-related cost categories (wages and salaries, employee benefits, nonmedical professional fees, labor-intensive services, and capital-related expenses) to produce the FY 2006 labor-related relative importance.

The price proxies that move the different cost categories in the market basket do not necessarily change at the same rate, and the relative importance captures these changes. Accordingly, the relative importance figure more closely reflects the cost share weights for FY 2006 when compared to the base year weights from the RPL market basket. Thus, the LRS has been and should be revised with each fiscal year update.

CMS disagrees with the commenter's suggestion to transition from the FY 2005 to the FY 2006 labor-related share. We note the FY 2006 labor-related share is based on the same methodology used to calculate the FY 2005 labor-related share (that is, it is composed of the costs that are related to, influenced by, or vary with the local labor market). Furthermore, the FY 2006 labor-related share is based on the 2002-based RPL market basket, which we believe adequately reflects the current cost structures of Medicare-participating IRFs. Therefore, we do not believe a transition is necessary.

Comment: Several commenters suggested that we include professional liability insurance (PLI) in the labor-related share since these costs are included in the wage index. The commenters also claim that professional liability insurance costs are wage-related.

Response: The wage index includes, as a fringe benefit cost, PLI for those policies that list actual names or specific titles of covered employees (59 FR 45358). The benefit cost weight in the market basket, included in the labor-related share, is also based on the same wage index benefit data. Therefore, the labor-related share includes these PLI costs. General PLI coverage maintained by hospitals is not recognized as a wage-related cost for purposes of the wage index or labor-related share.

Although general PLI costs do vary by geographic region, this variance is primarily influenced by state legislation and risk level, not by local wage rates. In fact, areas with high wage indices may have low relative PLI costs. For example, the malpractice geographic price indices, used in the Medicare physician payment system, for San Francisco, Los Angeles, and Boston regions are below 1, while their hospital wage indices for comparable areas are much greater than 1.

Comment: Several commenters recommended CMS delay the implementation of the RPL market

basket until CMS has reviewed the accuracy of the cost report data. Specifically, they requested CMS investigate HealthSouth's claim to have omitted home office and some depreciation costs from their 2002 and 2003 Medicare cost reports.

Response: The FY 2006 market basket update is based on the RPL market basket using FY 2002 Medicare cost report data. CMS has determined that, in the absence of FY 2002 HealthSouth home office cost report data, we will not incorporate preliminary FY 2004 HealthSouth home office costs into the 2002-based RPL market basket. (Due to a change in Medicare cost report requirements beginning with FY 2002, we used FY 2001 capital costs aged to FY 2002 in the 2002-based RPL market basket. Therefore, HealthSouth's depreciation costs were included in the RPL market basket and reflected in the FY 2006 market basket update.)

Home office costs represent only one of many cost categories (including but not limited to salaries, benefits, professional liability insurance, and pharmaceuticals) that are used to develop the cost category weights. We believe the absence of HealthSouth home office costs in this market basket has a minor impact on the distribution of these weights and, by extension, the final market basket update itself. When CMS receives full FY 2004 Medicare cost report data from HealthSouth, we plan to re-evaluate this decision.

Final Decision: We are finalizing our decision to update payments for rehabilitation facilities using the RPL market basket reflecting the operating and capital cost structures for IRFs, IPFs, and LTCHs.

2. Area Wage Adjustment

Section 1886(j)(6) of the Act requires the Secretary to adjust the proportion (as estimated by the Secretary from time to time) of rehabilitation facilities' costs that are attributable to wages and wage-related costs by a factor (established by the Secretary) reflecting the relative hospital wage level in the geographic area of the rehabilitation facility compared to the national average wage level for those facilities. Not later than October 1, 2001 and at least every 36 months thereafter, the Secretary is required to update the factor under the preceding sentence on the basis of information available to the Secretary (and updated as appropriate) of the wages and wage-related costs incurred in furnishing rehabilitation services. Any adjustments or updates made under section 1886(j)(6) of the Act for a FY shall be made in a manner that assures the aggregated payments under section 1886(j)(6) of the Act are not greater or less than those that will have been made in the year without such adjustment.

In our August 1, 2003 final rule (68 FR 45674), we acknowledged that on June 6, 2003, the Office of Management and Budget (OMB) issued ''OMB Bulletin No. 03–04,'' announcing revised definitions of Metropolitan Statistical Areas, and new definitions of Micropolitan Statistical Areas and Combined Statistical Areas. A copy of the Bulletin may be obtained at the following Internet address: *http://www.whitehouse.gov/omb/bulletins/b03-04.html*. At that time, we did not propose to apply these new definitions known as the Core-Based Statistical Areas (CBSAs). After further analysis and discussed in detail in section VI.B.2.d, we proposed to revised labor market area definitions as a result of the OMB revised definitions to adjust the FY 2006 IRF PPS payment rate. In addition, the IPPS is applying these revised definitions as discussed in the August 11, 2004 final rule (69 FR at 49207). We will adopt the CBSA-based geographic classifications as proposed in the FY 2006 IRF PPS proposed rule (70 FR 30188) and described below in section VI.B.2.d and section VI.B.2.e.

a. Revisions to the IRF PPS Geographic Classification

As discussed in the August 7, 2001 final rule, which implemented the IRF PPS (66 FR at 41316), in establishing an adjustment for area wage levels under § 412.624(e)(1), the labor-related portion of an IRF's Federal prospective payment is adjusted by using an appropriate wage index. As set forth in § 412.624(e)(1), an IRF's wage index is determined based on the location of the IRF in an urban or rural area as defined in §412.602 and further defined in § 412.62(f)(1)(ii) and § 412.62(f)(1)(iii) as urban and rural areas, respectively. An urban area, under the IRF PPS, is defined in § 412.62(f)(1)(ii) as a Metropolitan Statistical Area (MSA) or New England County Metropolitan Area (NECMA) as defined by the Office of Management and Budget (OMB). Under § 412.62(f)(1)(iii), a rural area is defined as any area outside of an urban area. In general, an urban area is defined as a Metropolitan Statistical Area (MSA) or New England County Metropolitan Area (NECMA) as defined by the Office of Management and Budget. Under § 412.62(f)(1)(iii), a rural area is defined as any area outside of an urban area. The urban and rural area geographic classifications defined in § 412.62(f)(1)(ii) and (f)(1)(iii), respectively, were used under the IPPS from FYs 1985 through 2004 (as specified in § 412.63(b)), and have been used under the IRF PPS since it was implemented for cost reporting periods beginning on or after January 1, 2002.

The wage index used for the IRF PPS is calculated by using the acute care IPPS wage index data on the basis of the labor market area in which the acute care hospital is located, but without taking into account geographic reclassification under sections 1886(d)(8) and (d)(10) of the Act commonly referred to as ''pre-reclassification''. In addition, Section 4410 of Pub. L. 105–33 (BBA) provides that for the purposes of section 1886(d)(3)(E) of the Act, that the area wage index applicable to hospitals located in an urban area of a State may not be less than the area wage index applicable to hospitals located in rural areas in the State. Consistent with past IRF policy, we treat this provision, commonly referred to as the ''rural floor'', as applicable to the acute inpatient hospitals and not IRFs. Therefore, the hospital wage index used for IRFs is commonly referred to as ''pre-floor'' indicating that the ''rural floor'' provision is not applied. As a result, the applicable IRF wage index value is assigned to the IRF on the basis of the labor market area in which the IRF is geographically located.

In the FY 2006 IRF PPS proposed rule (70 FR 30188, 30235), we described the labor markets that have been used for area wage adjustments under the IRF PPS since its implementation of cost reporting periods beginning on or after January 1, 2002. Previously, we have not described the labor market areas used under the IRF PPS in detail. However, we published each area's wage index in the IRF PPS final rules and update notices, each year and noted the use of the geographic area in applying the wage index adjustment in the IRF PPS payment examples in the final regulation implementing the IRF PPS (69 FR 41316, 41367 through 41368). The IRF industry has also understood that the same labor market areas in use under the IPPS (from the time the IRF PPS was implemented, for cost reporting periods beginning on or after January 1, 2002) are used under the IRF PPS. The OMB adopted new statistical area definitions (70 FR 30188, 30235–30238) and we proposed to adopt the new labor market area definitions based on these areas under the IRF PPS. Therefore, we are providing a more detailed description of the current IRF PPS labor market areas in this final rule, in order for the public to better understand the change to the IRF PPS labor market areas.

The current IRF PPS labor market areas are defined based on the definitions of MSAs, Primary MSAs (PMSAs), and NECMAs issued by the OMB (commonly referred to collectively as ''MSAs''). These MSA definitions are used before October 1, 2005, under the IRF PPS and other prospective payment systems, such as LTCH, IPF, Home Health Agency (HHA), and SNF (Skilled Nursing Facility) PPSs. In the IPPS final rule (67 FR at 49026 through 49034), revised labor market area definitions were adopted under the hospital IPPS (§ 412.64(b)), which are effective October 1, 2004 for acute care hospitals. These new CBSA standards were announced by the OMB late in 2000.

b. Current IRF PPS Labor Market Areas Based on MSAs

As mentioned earlier, since the implementation of the IRF PPS in the August 7, 2001 IRF PPS final rule, we used labor market areas to further characterize urban and rural areas as determined under § 412.602 and further defined in § 412.62(f)(1)(ii) and (f)(1)(iii) for discharges before October 1, 2005. We defined labor market areas under the IRF PPS based on the definitions of MSAs, PMSAs, and NECMAs issued by the OMB, which is consistent with the IPPS approach. The OMB also designates Consolidated MSAs (CMSAs). A CMSA is a metropolitan area with a population of 1 million or more, comprising two or more PMSAs (identified by their separate economic and social character). For purposes of the wage index, we use the PMSAs rather than CMSAs because they allow a more precise breakdown of labor costs (as described in section VI.B.2.d.ii of this final rule). If a metropolitan area is not designated as part of a PMSA, we use the applicable MSA.

These different designations use counties as the building blocks upon which they are based. Therefore, IRFs are assigned to either an MSA, PMSA, or NECMA based on whether the county in which the IRF is located is part of that area. All of the counties in a State outside a designated MSA, PMSA, or NECMA are designated as rural. For the purposes of calculating the wage index, we combine all of the counties in a State outside a designated MSA, PMSA, or NECMA together to calculate the statewide rural wage index for each State.

c. Core-Based Statistical Areas (CBSAs)

OMB reviews its Metropolitan Area definitions preceding each decennial census. As discussed in the IPPS final rule (69 FR at 49027), in the fall of 1998, OMB chartered the Metropolitan Area Standards Review Committee to examine the Metropolitan Area standards and develop recommendations for possible changes to those standards. Three notices related to the review of the standards, providing an opportunity for public comment on the recommendations of the Committee, were published in the **Federal Register** on the following dates: December 21, 1998 (63 FR at 70526); October 20, 1999 (64 FR at 56628); and August 22, 2000 (65 FR at 51060).

In the December 27, 2000 **Federal Register** (65 FR at 82228 through 82238), OMB announced its new standards. In that notice, OMB defines CBSA, beginning in 2003, as ''a geographic entity associated with at least one core of 10,000 or more population, plus adjacent territory that has a high degree of social and economic integration with the core as measured by commuting ties.'' The standards designate and define two categories of CBSAs: MSAs and Micropolitan Statistical Areas (65 FR at 82235 through 82238).

According to OMB, MSAs are based on urbanized areas of 50,000 or more population, and Micropolitan Statistical Areas (referred to in this discussion as Micropolitan Areas) are based on urban clusters of at least 10,000 population, but less than 50,000 population. Counties that do not fall within CBSAs (either MSAs or Micropolitan Areas) are deemed ''Outside CBSAs.'' In the past, OMB defined MSAs around areas with a minimum core population of 50,000, and smaller areas were ''Outside MSAs.'' On June 6, 2003, OMB announced the new CBSAs, comprised of MSAs and the new Micropolitan Areas based on Census 2000 data. (A copy of the announcement may be obtained at the following Internet address: *http://www.whitehouse.gov/omb/bulletins/fy04/b04-03.html*.)

The new CBSA designations recognize 49 new MSAs and 565 new Micropolitan Areas, and revise the composition of many of the existing MSAs. There are 1,090 counties in MSAs under the new CBSA designations (previously, there were 848 counties in MSAs). Of these 1,090 counties, 737 are in the same MSA as they were prior to the change in designations, 65 are in a different MSA, and 288 were not previously designated to any MSA. There are 674 counties in Micropolitan Areas. Of these, 41 were previously in an MSA, while 633 were not previously designated to an MSA. There are five counties that previously were designated to an MSA but are no longer designated to either an MSA or a new Micropolitan Area: Carter County, KY; St. James Parish, LA; Kane County, UT; Culpepper County, VA; and King George County, VA. For a more detailed discussion of the conceptual basis of the new CBSAs, refer to the IPPS final rule (67 FR at 49026 through 49034).

d. Revisions to the IRF PPS Labor Market Areas

In its June 6, 2003 announcement, OMB cautioned that these new definitions ''should not be used to develop and implement Federal, State, and local non-statistical programs and policies without full consideration of the effects of using these definitions for such purposes. These areas should not serve as a general-purpose geographic framework for non-statistical activities, and they may or may not be suitable for use in program funding formulas.''

We currently use MSAs to define labor market areas for purposes of the wage index. In fact, MSAs are also used to define labor market areas for purposes of the wage index for many of the other Medicare prospective payment systems (for example, LTCH, SNF, HHA, IPF, and Outpatient). While we recognize MSAs are not designed specifically to define labor market areas, we believe they represent a reasonable and appropriate proxy for this purpose, because they are based upon characteristics we believe also generally reflect the characteristics of unified labor market areas. For example, CBSAs reflect a core population plus an adjacent territory that reflects a high degree of social and economic integration. This integration is measured by commuting ties, thus demonstrating that these areas may draw workers from the same general areas. In addition, the most recent CBSAs reflect the most up-to-date information. The OMB reviews its Metropolitan Area (MA) definitions preceding each decennial census to reflect recent population changes and the CBSAs are based on the Census 2000 data. Thus, we proposed to adopt the new CBSA designations to define labor market areas for the purposes of the IRF PPS.

Historically, Medicare PPSs have utilized MA definitions developed by OMB. The labor market areas currently used under the IRF PPS are based on the MA definitions issued by OMB. OMB reviews its MA definitions preceding each decennial census to reflect more recent population changes. Thus, the CBSAs are OMB's latest MA definitions based on the Census 2000 data. Because we believe that the OMB's latest MA designations more accurately reflect the local economies and wage levels of the areas in which hospitals are currently located, we proposed to adopt the

revised labor market area designations based on the OMB's CBSA designations.

As specified in § 412.624(e)(1), we explained in the August 7, 2001 final rule that the IRF PPS wage index adjustment was intended to reflect the relative hospital wage levels in the geographic area of the hospital as compared to the national average hospital wage level. Since OMB's CBSA designations are based on Census 2000 data and reflect the most recent available geographic classifications, we will adopt the labor market area definitions used under the IRF PPS as proposed in the FY 2006 IRF PPS proposed rule (70 FR 30188). Specifically, we will revise the IRF PPS labor market definitions based on the OMB's new CBSA designations effective for IRF PPS discharges occurring on or after October 1, 2005. Accordingly, we will revise § 412.602 to specify that for discharges occurring on or after October 1, 2005, the application of the wage index under the IRF PPS will be made on the basis of the location of the facility in an urban or rural area as defined in § 412.64(b)(1)(ii)(A) through (C) as proposed in the FY 2006 IRF PPS proposed rule (70 FR 30188).

As a conforming change, we will revise § 412.602, definitions for rural and urban areas effective for discharges occurring on or after October 1, 2005 will be defined in § 412.64(b)(1)(ii)(A) through (C) as proposed in the FY 2006 IRF PPS proposed rule (70 FR 30188) and adopted in this final rule. In addition (as proposed in the FY 2006 IRF PPS proposed rule at 70 FR 30188), we will revise the regulation text to explicitly reference urban and rural definitions for a cost-reporting period beginning on or after January 1, 2002, with respect to discharges occurring during the period covered by such cost reports but before October 1, 2005 under § 412.62(f)(1)(ii) and § 412.62(f)(1)(iii).

We note that these are the same labor market area definitions (based on the OMB's new CBSA-based designations) implemented under the IPPS at § 412.64(b), which are effective for those hospitals beginning October 1, 2004 as discussed in the IPPS final rule (69 FR at 49026 through 49034). The similarity between the IPPS and the IRF PPS includes the adoption in the initial implementation of the IRF PPS of the same labor market area definitions under the IRF PPS that existed under the IPPS at that time, as well as the use of acute care hospitals' pre-reclassification and pre-floor wage data in calculating the IRF PPS wage index. In addition, the OMB's CBSA-based designations reflect the most recent available geographic classifications and more accurately reflects current labor markets. Therefore, we believe that revising the IRF PPS labor market area definitions based on OMB's CBSA-based designations are consistent with our historical practice of modeling IRF PPS policy after IPPS policy.

In sections VI.B.2.d.i. through VI.B.2.d.iii of this final rule and as described in the FY 2006 IRF PPS proposed rule (70 FR 30188), we describe the composition of the IRF PPS labor market areas based on the OMB's new CBSA designations.

i. New England MSAs

As stated above, in the August 7, 2001 final rule, we currently use NECMAs to define labor market areas in New England, because these are county-based designations rather than the 1990 MSA definitions for New England, which used minor civil divisions such as cities and towns. Under the current MSA definitions, NECMAs provided more consistency in labor market definitions for New England compared with the rest of the country, where MSAs are county-based. Under the new CBSAs, OMB has now defined the MSAs and Micropolitan Areas in New England on the basis of counties. The OMB also established New England City and Town Areas, which are similar to the previous New England MSAs.

To create consistency among all labor market areas and to maintain these areas on the basis of counties, we proposed to and are adopting in this final rule to use the county-based areas for all MSAs in the nation, including those in New England. Census has now defined the New England area based on counties, creating a city- and town-based system as an alternative. We believe that adopting county-based labor market areas for the entire country except those in New England will lead to inconsistencies in our designations. Adopting county-based labor market areas for the entire country provides consistency and stability in the Medicare payment program because all the labor market areas throughout the country, including New England, will be defined using the same system (that is, counties) rather than different systems in different areas of the country, and minimizes programmatic complexity.

We have consistently employed a county-based system for New England for precisely that reason: To maintain consistency with the labor market area definitions used throughout the country. Because we have never used cities and towns for defining IRF labor market areas, employing a county-based system in New England maintains that consistent practice. We note that this is consistent with the implementation of the CBSA-based designations under the IPPS for New England (see 69 FR at 49028). Accordingly, as specified in the FY 2006 proposed rule (70 FR 30188), we are using the New England MSAs as determined under the new CBSA-based labor market area definitions in defining the revised IRF PPS labor market areas in this final rule.

ii. Metropolitan Divisions

Under OMB's new CBSA designations, a Metropolitan Division is a county or group of counties within a CBSA that contains a core population of at least 2.5 million, representing an employment center, plus adjacent counties associated with the main county or counties through commuting ties. A county qualifies as a main county if 65 percent or more of its employed residents work within the county and the ratio of the number of jobs located in the county to the number of employed residents is at least 0.75. A county qualifies as a secondary county if 50 percent or more, but less than 65 percent, of its employed residents work within the county and the ratio of the number of jobs located in the county to the number of employed residents is at least 0.75. After all the main and secondary counties are identified and grouped, each additional county that already has qualified for inclusion in the MSA falls within the Metropolitan Division associated with the main/secondary county or counties with which the county at issue has the highest employment interchange measure. Counties in a Metropolitan Division must be contiguous (65 FR at 82236).

The construct of relatively large MSAs being comprised of Metropolitan Divisions is similar to the current construct of the CMSAs comprised of PMSAs. As noted above, in the past, OMB designated CMSAs as Metropolitan Areas with a population of 1 million or more and comprised of two or more PMSAs. Under the IRF PPS, we currently use the PMSAs rather than CMSAs to define labor market areas because they comprise a smaller geographic area with potentially varying labor costs due to different local economies. We believe that CMSAs may be too large of an area with a relatively large number of hospitals, to accurately reflect the local labor costs of all the individual hospitals included in that relatively ''large'' area. A large market area designation increased the likelihood of including many hospitals located in areas with very different labor market conditions within the same

market area designation. This variation could increase the difficulty in calculating a single wage index that will be relevant for all hospitals within the market area designation. Similarly, we believe that MSAs with a population of 2.5 million or greater may be too large of an area to accurately reflect the local labor costs of all the individual hospitals included in that relatively ''large'' area. Furthermore, as indicated above, Metropolitan Divisions represent the closest approximation to PMSAs, the building block of the current IRF PPS labor market area definitions, and therefore, will most accurately maintain our current structuring of the IRF PPS labor market areas. As implemented under the IPPS (69 FR at 49029), we proposed and for this final rule, we are using the Metropolitan Divisions where applicable (as describe below) under the new CBSA-based labor market area definitions.

In addition to being comparable to the organization of the labor market areas under the current MSA designations (that is, the use of PMSAs rather than CMSAs), we believe that using Metropolitan Divisions where applicable (as described below) under the IRF PPS will result in a more accurate adjustment for the variation in local labor market areas for IRFs. Specifically, if we were to recognize the relatively ''larger'' CBSA that comprises two or more Metropolitan Divisions as an independent labor market area for purposes of the wage index, it will be too large and will include the data from too many hospitals to compute a wage index that will accurately reflect the various local labor costs of all the individual hospitals included in that relatively ''large'' CBSA.

As mentioned earlier, a large market area designation increases the likelihood of including many hospitals located in areas with very different labor market conditions within the same market area designation. This variation could increase the difficulty in calculating a single wage index that will be relevant for all hospitals within the market area designation. Rather, by recognizing Metropolitan Divisions where applicable (as described below) under the new CBSA-based labor market area definitions under the IRF PPS, we believe that in addition to more accurately maintaining the current structuring of the IRF PPS labor market areas, the local labor costs will be more accurately reflected, thereby resulting in a wage index adjustment that better reflects the variation in the local labor costs of the local economies of the IRFs located in these relatively ''smaller'' areas. In section VI.B.2.d.ii.of this final rule, we describe where Metropolitan Divisions will be applicable under the new CBSA-based labor market area definitions under the IRF PPS final rule.

Under the OMB's CBSA-based designations, there are 11 MSAs containing Metropolitan Divisions: Boston; Chicago; Dallas; Detroit; Los Angeles; Miami; New York; Philadelphia; San Francisco; Seattle; and Washington, DC. Although these MSAs were also CMSAs under the prior definitions, in some cases their areas have been altered. Under the current IRF PPS MSA designations, Boston is a single NECMA. Under the CBSA-based labor market area designations, it is comprised of four Metropolitan Divisions. Los Angeles will go from four PMSAs under the current IRF PPS MSA designations to two Metropolitan Divisions under the CBSA-based labor market area designations. The New York CMSA will go from 15 PMSAs under the current IRF PPS MSA designations to four Metropolitan Divisions under the CBSA-based labor market area designations. The five PMSAs in Connecticut under the current IRF PPS MSA designations will become separate MSAs under the CBSA-based labor market area designations because two MSAs became separate MSAs. The number of PMSAs in New Jersey, under the current IRF PPS MSA designations will go from five to two, with the consolidation of two New Jersey PMSAs (Bergen-Passaic and Jersey City) into the New York-Wayne-White Plains, NY–NJ Division, under the CBSA-based labor market area designations. In San Francisco, under the CBSA-based labor market area designations there are only two Metropolitan Divisions. Currently, there are six PMSAs, some of which are now separate MSAs under the current IRF PPS labor market area designations.

Under the current IRF PPS labor market area designations, Cincinnati, Cleveland, Denver, Houston, Milwaukee, Portland, Sacramento, and San Juan are all designated as CMSAs, but will no longer be designated as CMSAs under the CBSA-based labor market area designations. As noted previously, the population threshold to be designated a CMSA under the current IRF PPS labor market area designations is 1 million. In most of these cases, counties currently in a PMSA will become separate, independent MSAs under the CBSA-based labor market area designations, leaving only the MSA for the core area under the CBSA-based labor market area designations.

We note that subsequent to the publication of the FY 2006 IRF PPS proposed rule (70 FR 30188), titles to certain CBSAs were changed based on OMB Bulletin No. 05–02 (November 2004). The title changes listed below are nomenclatures that do not result in substantive changes to the CBSA-based designations. Thus, these changes are listed below and will be incorporated into the FY 2007 CBSA-based urban wage index tables.

- CBSA 36740: Orlando-Kissimmee, FL
- CBSA 37620: Parkersburg-Marietta-Vienna, WV-OH
- CBSA 42060: Santa Barbara-Santa Monica, CA
- CBSA 13644: Bethesda-Gaithersburg-Frederick, MD
- CBSA 32580: McAllen-Edinburg-Mission, TX
- CBSA 26420: Huston-Sugar Land-Baytown, TX
- CBSA 35644: New York-White Plains-Wayne, NY-NJ

ii. Micropolitan Areas Under the New OMB CBSA-Based Designations, Micropolitan

Areas are essentially a third area definition consisting primarily of areas that are currently rural, but also include some or all of areas that are currently designated as urban MSA. As discussed in greater detail in the IPPS final rule (69 FR at 49029 through 49032), how these areas are treated will have significant impacts on the calculation and application of the wage index. Specifically, whether or not Micropolitan Areas are included as part of the respective statewide rural wage indices will impact the value of the statewide rural wage index of any State that contains a Micropolitan Area because a hospital's classification as urban or rural affects which hospitals' wage data are included in the statewide rural wage index. As discussed above in section VI.B.2.b of this final rule, we combine all of the counties in a State outside a designated urban area to calculate the statewide rural wage index for each State.

Including Micropolitan Areas as part of the statewide rural labor market would result in an increase to the statewide rural wage index because hospitals located in those Micropolitan Areas typically have higher labor costs than other rural hospitals in the State. Alternatively, if Micropolitan Areas were to be recognized as independent labor market areas, because there would be so few hospitals in those areas to complete a wage index, the wage indices for IRFs in those areas could become relatively unstable as they might change considerably from year to year.

Since the implementation of the IRF PPS, we used MSAs to define urban labor market areas and group all the

hospitals in counties within each State that are not assigned to an MSA into a statewide rural labor market area. Therefore, we used the terms ''urban'' and ''rural'' wage indices in the past for ease of reference. However, the introduction of Micropolitan Areas by the OMB potentially complicates this terminology because these areas include many hospitals that are currently included in the statewide rural labor market areas.

We proposed to treat Micropolitan Areas as rural labor market areas under the IRF PPS for the reasons outlined below. That is, counties that are assigned to a Micropolitan Area under the CBSA-based designations would be treated the same as other ''rural'' counties that are not assigned to either an MSA or a Micropolitan Area. Therefore, in determining an IRF's applicable wage index (based on IPPS hospital wage index data) an IRF in a Micropolitan Area under OMB's CBSA designations would be classified as ''rural'' and would be assigned the statewide rural wage index for the State in which it resides.

In the IPPS final rule (69 FR at 49029 through 49032), we discuss our evaluation of the impact of treating Micropolitan areas as part of the statewide rural labor market area instead of treating Micropolitan Areas as independent labor market areas for hospitals paid under the IPPS. As an alternative to treating Micropolitan Areas as part of the statewide rural labor market area for purposes of the IRF PPS, in the FY 2006 proposed rule (70 FR 30188), we examined treating Micropolitan Areas as separate (urban) labor market areas, just as we did when implementing the revised labor market areas under the IPPS.

As discussed in greater detail in that same final rule, the designation of Micropolitan Areas as separate urban areas for wage index purposes will have a dramatic impact on the calculation of the wage index. This is because Micropolitan areas encompass smaller populations than MSAs, and tend to include fewer hospitals per Micropolitan area. Currently, there are only 25 MSAs with one hospital in the MSA. However, under the new CBSA-based definitions, there are 373 Micropolitan Areas with one hospital, and 49 MSAs with only one hospital.

Since Micropolitan Areas encompass smaller populations than MSAs, they tend to include fewer hospitals per Micropolitan Area, recognizing Micropolitan Areas as independent labor market areas will generally increase the potential for dramatic shifts in those areas' wage indices from one year to the next because a single hospital (or group of hospitals) could have a disproportionate effect on the wage index of the area. The large number of labor market areas with only one hospital and the increased potential for dramatic shifts in the wage indexes from one year to the next is a problem for several reasons. First, it creates instability in the wage index from year to year for a large number of hospitals. Second, it reduces the averaging effect (this averaging effect allows for more data points to be used to calculate the representative standard of measured labor costs within a market area) lessening some of the incentive for hospitals to operate efficiently. This incentive is inherent in a system based on the average hourly wages for a large number of hospitals, as hospitals could profit more by operating below that average. In labor market areas with a single hospital, high wage costs are passed directly into the wage index with no counterbalancing averaging with lower wages paid at nearby competing hospitals. Third, it creates an arguably inequitable system when so many hospitals have wage indexes based solely on their own wages, while other hospitals' wage indexes are based on an average hourly wage across many hospitals. Therefore, in order to minimize the potential instability in payment levels from year to year, we believe it will be appropriate to treat Micropolitan Areas as part of the statewide rural labor market area under the IRF PPS.

For the reasons noted above, and consistent with the treatment of these areas under the IPPS, we proposed and are adopting Micropolitan Areas as independent labor market areas under the IRF PPS. Under the new CBSA-based labor market area definitions, Micropolitan Areas are considered a part of the statewide rural labor market area. Accordingly, we will determine an IRF PPS statewide rural wage index using the acute-care IPPS hospital wage data (the rational for using IPPS hospital wage data is discussed in section III.B.2.f of this final rule) from hospitals located in non-MSA areas assign the statewide rural wage index to IRFs located in those areas.

e. Implementation of the CBSA-Based Labor Market Areas

Under section 1886(j) of the Act, as added by section 4421 of the Balanced Budget Act of 1997 (BBA) (Pub. L. 105–33) and as amended by section 125 of the Medicare, Medicaid, and State Children's Health Insurance Program (SCHIP) Balanced Budget Refinement Act of 1999 (BBRA) (Pub. L. 106–113) and section 305 of the Medicare, Medicaid, and SCHIP Benefits Improvement and Protection Act of 2000 (BIPA) (Pub. L. 106–554), which requires the implementation of such prospective payment system, the Secretary generally has broad authority in developing the IRF PPS, including whether and how to make adjustments to the IRF PPS.

In the FY 2006 IRF PPS proposed rule (70 FR 30188), Table 3 listed IRFs that submitted an IRF–PAI in the past 18-months. The data in Table 3 was obtained from a report we requested in February 2005 from the Iowa Foundation for Medical Care (IFMC). IFMC is the CMS contractor where the IRF–PAI database is located. Table 3 listed each IRF's provider number; provider name; and State and county location; existing MSA-based labor market area designation; and its CBSA-based designation. The purpose of Table 3 was to only facilitate an understanding of the policies related to the proposed change to the IRF PPS labor market areas discussed above by illustrating an IRF's change from the MSA-based designation to the proposed CBSA-based designation. Thus, FIs will not be instructed to use Table 3 in the FY 2006 IRF PPS proposed rule (70 FR 30188) to alter the information regarding an IRF's State and county location or to make changes to the provider specific file based on Table 3 of the FY 2006 IRF PPS proposed rule.

Table 1 of the addendum of this final rule is a crosswalk file of all counties/areas in the United States, Guam, Puerto Rico, and the Virgin Islands with the corresponding State and county code, county and State name, FY 2006 MSA number, FY 2006 MSA-based urban or rural designation, FY 2006 MSA-based wage index, FY 2006 CBSA-based wage index, FY 2006 CBSA number, FY 2006 CBSA-based urban or rural designation, and FY 2006 blended one-year transition wage index as discussed below in Section VI.B.2.e. Table 1 of the addendum to this final rule will be used by FIs to determine the FY 2006 one-year transition wage index for IRFs located in areas as documented in the FI's provider specific file.

When the revised labor market areas based on OMB's new CBSA-based designations were adopted under the IPPS beginning on October 1, 2004, a transition to the new designations was established due to the scope and substantial implications of these new CBSA-based designations in order to buffer the subsequent substantial impacts on numerous hospitals. As discussed in the IPPS final rule (69 FR at 49032), during FY 2005, a blend of

wage indices is calculated for those acute care IPPS hospitals experiencing a drop in their wage index because of the adoption of the new labor market areas. The most substantial decrease in wage index impacts urban acute-care hospitals that were designated as rural under the CBSA-based designations.

In the FY 2006 IRF PPS proposed rule (70 FR 30188), we recognize that, just like IPPS hospitals, IRFs may experience decreases in their wage index as a result of the labor market area changes. Our data analysis for the FY 2006 IRF PPS proposed rule (70 FR 30188) indicated that a majority of IRFs either expect no change in wage index or an increase in wage index based on CBSA definitions. Based on this analysis for the FY 2006 IRF PPS proposed rule (70 FR 30188), we found a very small number of IRFs (3 percent) will experience a decline of 5 percent or more in the wage index based on CBSA designations. A 5 percent decrease in the wage index for an IRF may result in a noticeable decrease in their wage index compared to what their wage index would have been for FY 2006 under the MSA-based designations. We also found that a very small number of IRFs (4 percent) would experience a change in either rural or urban designation under the CBSA-based definitions. Since a majority of IRFs would not be significantly impacted by the labor market areas, we did not propose a transition to the new CBSA-based labor market area, nor did we propose to adopt a hold harmless policy, nor an ''out-commuting'' policy for the purposes of the IRF PPS wage index.

Public comments and our responses on the proposed changes for implementing the area wage adjustments are summarized below:

Comment: A large number of commenters urged CMS to develop a transition policy or implement a similar transition policy as was implemented under the IPPS to minimize the fiscal impact of the change in wage index. Many advocated for a one-year transition with a blended wage index, equal to 50 percent of the FY 2006 MSA wage index and 50 percent of the FY 2006 CBSA-based wage index. We also received a few comments recommending a multi-year transition and possibly a permanent blended wage index. Overall, commenters expressed concerns for IRFs that would experience a significant decrease in the wage index. In general, commenters request that we mitigate the impact of the change from the MSA-based designation to the CBSA-based designations over time with a transition policy.

Response: We recognize that some IRFs will experience decreases in their applicable wage index as a result of the conversion from the MSA-based designations to the CBSA-based designations. After further analysis of various transition options suggested by commenters as well as our further data analysis to support the policies in this final rule, we considered various transition options to determine a transition policy that would mitigate the impact on IRFs that would experience a decrease in the wage index, and buffer the overall impact on the unadjusted payment rate. Based on the commenters' recommendations, we carefully reviewed various budget neutral transition policies such as a blended wage index as well as a floor and ceiling approach as discussed in detail below.

We reviewed a floor and ceiling transition policy option. Although this option seemed to minimize the impact on IRFs, we found that this approach would provide relief to IRFs that experience a decrease in the wage index, but with respect to IRFs that would get a significant increase in the wage index, it would also limit the amount they could expect their wage index to increase. The difficulty of developing a floor and ceiling transition policy is determining an appropriate floor and a ceiling that would best mitigate IRFs that experience a decrease in the wage index while lessening the overall impact on the unadjusted base payment kept us from choosing this option.

Although a few commenters recommended a permanent blended wage index (comprised of the MSA-based wage index and the CBSA-based wage index), we do not believe this is appropriate. Beginning in FY 2006, acute care hospital will receive 100 percent of the IPPS wage index based on the new CBSA wage index. From FY 2006 and forward, CMS will no longer maintain the geographic classifications based on MSAs. Therefore, MSA-based wage indexes will not be able to reflect the same amount of accuracy as they currently represent by having the geographical classification updated annually. By developing a permanent blended wage index, CMS would only be geographically updating the CBSA-based areas and not the MSA-based areas. Consequently, we believe that implementation of a permanent blended wage index would result in a wage index that is not as accurate as a wage index based on the CBSA methodology, as thoroughly discussed in section VI.B.2.d.

Several commenters suggested that IRFs be afforded the same transition as adopted by IPPS (69 FR 48916, 49032–49034). Therefore, another budget neutral one-year transition policy we considered would blend the wage index for IRFs that would experience a reduction in the wage index. The blended wage index would consist of 50 percent of the FY 2006 MSA-based wage index and 50 percent of the FY 2006 CBSA-based wage index (both based on the FY 2001 hospital wage data), only for IRFs that experience a decrease due solely to the changes in the labor market definitions. Although some commenters recommended this transition policy, we believe that this would not allow all IRFs the ability to transition from the MSA-based wage index to the CBSA-based wage index because this transition policy only focuses on the blending the wage index for IRFs that experience a decrease in the wage index. In addition, we found that this would change the budget neutrality factor applied to the base rates from 0.9996 if there was no transition to 0.9977 under this transition policy. Therefore, the budget neutrality factor under the transition policy for only those IRFs that experience a decrease in the wage index would reduce the unadjusted base rate by approximately more than 20 dollars. The overall impact based on the reduction of the unadjusted base rate would result in all IRFs experiencing a reduction in payments. Under this approach, we found that IRFs would experience a significant reduction in the unadjusted payment amount, which would not mitigate the change in estimated payments for IRFs.

The last one-year budget neutral blended transition policy we analyzed would allow all IRFs to transition from an MSA-based wage index to a CBSA-based wage index. This transition policy would be comprised of 50 percent of the FY 2006 MSA-based wage index and 50 percent of the FY 2006 CBSA-based wage index (both based on the FY 2001 hospital wage data) for all IRFs. As discussed in the FY 2006 IRF PPS proposed rule (70 FR 30188), the one-year blended wage index for all IRFs would result in a slight decrease of budget neutrality factor applied to the base rates from 0.9996 if there was no transition to 0.9995 under this transition policy. As a result, the budget neutrality factor applied to the unadjusted payment amount would reduce the unadjusted payment amount by approximately 1 dollar as compared to fully adopting the CBSA-based designations. This slight decrease to the unadjusted payment amount will lessen the overall payment reduction impact

on all providers—regardless of urban or rural designations.

Although a blended wage index for all IRFs would also help IRFs that are adversely affected by the changes from MSAs to CBSAs, it would reduce the expected higher CBSA wage index values for IRFs that are positively affected by the changes (compared to fully adopting the CBSA-based wage index). To clarify, a blended wage index for IRFs that experience any increase due to the change from an MSA-based wage index to a CBSA-based wage index would be lessened. Thus, this would allow all IRFs one year to financially prepare for a change in wage index due to the change from FY 2005 MSA-based to FY 2006 CBSA-based designations—regardless of an increase or decrease in wage index.

In addition, although the blended wage index would limit the wage index increase for IRFs that experience an increase due to the change from an MSA-based wage index to a CBSA-based wage index during FY 2006, these IRFs will continue to see an increase in their wage index. However, the dampening effect of the blended wage index for IRFs that experience an increase in their wage index does not significantly impact these IRFs based solely on the wage index. The increase in the wage index these IRFs would experience would still take effect because the blended wage index would be an average of the MSA-based wage index and a CBSA-based wage index and the CBSA-based wage index would be greater than the MSA-based wage index. Therefore, IRFs in this scenario would not be significantly impacted by a blended wage index. In other words, IRFs that have higher CBSA wage index values and are subject to the blend will continue to have a benefit of having their payment derived, in part, from the higher CBSA wage index. We believe this option helps create an equitable situation for all IRFs.

Many commenters urged and supported a transition to adopting the CBSA-based designations. Thus, this blended wage index (50 percent of the FY 2006 MSA-based wage index and 50 percent of the FY 2006 CBSA-based wage index and both based on the FY 2001 hospital wage data) would provide IRFs a one-year transition from the MSA-based designations to the CBSA-based designations. In addition, the one year transition of a blended wage for all IRFs would result in 93 percent of all IRFs experiencing a wage index change between a decrease by up to 2 percent or an increase by up to 2 percent. In any given year, even under the MSA-based wage index, many IRFs experience a 2 percent change in wage index and this 2 percent change would most likely be a wage index change that would not significantly impact IRF payments based solely on the wage index. Thus, from year to year, almost all IRFs are expected to experience a minimal change in wage index values. In comparison, if we fully adopted the CBSA-based wage index without a transition as proposed, 85 percent of the IRFs would experience a change between a decrease by up to 2 percent or an increase by up to 2 percent. By providing a one year transition for all IRFs to receive a blended wage index (50 percent of the FY 2006 MSA-based wage index and 50 percent of the FY 2006 CBSA-based wage index and both based on the FY 2001 hospital wage data), a larger majority of IRFs will experience a minimal change in wage index from FY 2005 to FY 2006.

We decided not to provide for a longer transition, as recommended by a few commenters, because we have already, in effect, provided one year at a higher wage index level for all IRFs by retaining the previous labor market definitions for two years after the new labor market definitions became available. For example, we did not implement the new labor market area definitions as quickly as was done for facilities paid under the IPPS. Furthermore, since most IRFs benefit from a one year blended wage index, there will be minimal affect on IRFs. Thus, a one year transition is sufficient to minimize the impact of adopting the CBSA-based designations because we believe that the transition period allows IRFs sufficient time to adjust their necessary business practices. In addition to the one year blended wage index, we are implementing a longer, 3-year hold harmless transition (as discussed in this section below of this final rule (section VI.B.2.e)) for a group of IRFs that during FY 2005 are as designated as rural, and for FY 2006 will be designated as urban under the new CBSA-based geographic designation method. We are implementing a longer hold harmless transition for these IRFs because, as a group they experience a reduction in payments due to the labor market revisions and the loss of the rural adjustment.

The statute confers broad authority to the Secretary under 1886(j)(6) of the Act to establish factor for area wage differences by a factor such that budget neutral wage index options may be considered. After consideration of the recommendations presented by the commenters and based on our further analysis, we will implement a budget neutral one-year transition policy such that a blended wage index (50 percent of the FY 2006 MSA-based wage index and 50 percent of the FY 2006 CBSA-based wage index that are both based on the FY 2001 hospital wage data) will apply to all IRFs. This transition policy will be effective for discharges occurring on or after October 1, 2005 and on or before September 30, 2006. This transition will mitigate the large negative impacts for IRFs that experience a decrease in the wage index and allow all IRFs to transition from the MSA-based wage index to the CBSA-based wage index for one-year. Therefore, for FY 2007 and subsequent years, we will adopt the full CBSA-based wage index for all IRFs.

Comment: Several commenters requested CMS to consider a multi-year hold harmless policy as was implemented by IPPS.

Response: As discussed in the August 11, 2004 IPPS final rule (69 FR at 49032), during FY 2005, a hold harmless policy was implemented to minimize the overall impact of hospitals that were in FY 2004 designated as urban under the MSA designations, but will become rural under the CBSA designations. In the same final rule, hospitals were afforded a three-year hold harmless policy because the IPPS determined that acute-care hospitals that changed designations from urban to rural will be substantially impacted by the significant change in wage index. Although we considered a hold harmless policy in our FY 2006 proposed rule, we did not propose a hold harmless policy because we believed that rural IRFs (under the MSA-based designations) that change to an urban designation (based on the CBSA-based geographic classification) would experience a significant increase to the wage index under the CBSA-based designations that would mitigate a significant decrease in payments. However, many commenters urged CMS to reconsider a hold harmless policy because the commenters demonstrated that some rural facilities would experience undue hardship with the loss of the rural adjustment under § 412.624(e)(3).

In our analysis (discussed in the FY 2006 IRF PPS proposed rule (70 FR 30188)), we found that 91 percent of rural facilities that would be designated as urban under the CBSA-based definitions will experience an increase in the wage index. A majority (74 percent) of rural facilities that become urban will experience at least a 5 percent to 10 percent or more increase in wage index. Although these rural IRFs experience wage index increases, several commenters emphasized that a

majority of rural providers that change designations may experience a wage index increase of at least 5 percent or more, the loss of the rural adjustment would be such a large negative impact on the rural IRFs that it may potentially cause undue hardship for these rural facilities.

In response to the commenters concerns, we considered different hold harmless policies such as a multi-year hold harmless policy as well as a phase-out of the rural adjustment for rural IRFs under the MSA-based designations that received a rural adjustment of 19.14 percent in FY 2005. A commenter recommended a phase-out of the FY 2005 rural adjustment of 19.14 percent because this option allows IRFs that change designations, from rural to urban, time to adjust to the loss of the 19.14 percent rural adjustment which would result in loss of payments. Other commenters concurred that the loss of the FY 2005 rural adjustment far exceeds the urban CBSA-based increase in wage index. Thus, commenters believed that this would have significant payment implications, particularly large negative impacts for rural IRFs that change designations because they will experience significant payment losses.

After further consideration of hold harmless policies as recommended by commenters, we have decided to implement a hold harmless policy to mitigate significant payment implications, particularly large negative impacts. We will implement a 3 year budget neutral hold harmless policy for those IRFs that meet the definition in § 412.602 as rural in FY 2005 and will become urban under the FY 2006 CBSA-based designations. We will afford existing IRFs designated in FY 2005 as rural IRFs (pursuant to § 412.602) and redesignated as an urban facility in FY 2006 (pursuant to § 412.602) in FY 2006, whose payment is lower because of such redesignation, a 3 year time span to adjust to the loss of the FY 2005 rural adjustment of 19.14 percent because the loss of the 19.14 percent rural adjustment would result in a significant loss of payments. This adjustment will be in addition to the one-year blended wage index (comprised of FY 2006 MSA-based wage index and FY 2006 CBSA-based wage index both based on FY 2001 hospital data) for all IRFs.

Although our intent under our hold harmless policy is to mitigate the negative payment effect upon a rural facility that is redesignated as an urban facility (effective FY 2006), the hold harmless policy should not result in an IRF that comes under the hold harmless policy to realize greater payments than the IRF would have if instead the IRF would have been paid under its rural designation in FY 2006 including the FY 2005 rural adjustment of 19.14 percent. Therefore, we will make the appropriate payment modification to the additional adjustment made under our hold harmless policy so that an existing FY 2005 rural IRF that is redesignated from rural to urban in FY 2006 will in FY 2006 or FY 2007 not realize payments that are greater than what the payments would have been if the facility would have instead been paid under its rural designation in FY 2006 including the FY 2005 rural adjustment of 19.14 percent. In other words, if an existing FY 2005 IRF is redesignated from rural to urban in FY 2006, and it will realize an increase in payments during the one year transition due to the hold harmless policy, it will not receive the full two-thirds of the 19.14 percent rural adjustment. However, if this same IRF realizes a decrease in payment in FY 2007 solely because of such redesignation in FY 2006, it will receive one-third of the 19.14 percent rural adjustment in such case.

As stated above, the hold harmless policy is specifically for FY 2005 rural IRFs that become urban in FY 2006 and that experience a loss in payment because of this redesignation. Thus, we are not implementing a hold harmless policy for urban facilities (under the MSA-based designation) that become rural (under the CBSA-based designation) because these IRFs will receive the updated FY 2006 rural adjustment of 21.3 percent that they did not receive in FY 2005 as an urban facility. The gain of this payment adjustment should more than mitigate the loss of the wage index decreases associated with the rural designations. For FY 2005, rural facilities that remain rural under the FY 2006 CBSA-based designation, we are not extending the hold harmless policy for these IRFs because these rural IRFs will receive the updated FY 2006 rural adjustment of 21.3 percent, which is higher than the FY 2005 rural adjustment of 19.14 percent. We are also not extending the hold harmless policy for facilities that remain in their urban geographic designations from the MSA-based designation to the CBSA-based designation because we have mitigated the impact of the change in wage index value by implementing a one year transition wage index (comprised of 50 percent FY 2006 MSA-based wage index and 50 percent of the FY 2006 CBSA-based wage index) for all IRFs as discussed in detail above. As was previously stated, the purpose of the hold harmless policy is to mitigate the significant payment implications for existing rural IRFs that may need time to adjust to the loss of their FY 2005 rural payment adjustment that experience a reduction in payments solely because of such redesignation. Our decision to implement the hold harmless policy only for existing FY 2005 rural IRFs that will be adversely impacted, is supported by comments received primarily requesting implementation of a method that mitigates the adverse payment impacts because of the loss of the rural adjustment.

Due to our review and analysis, we determined that a 3 year budget neutral hold harmless policy would best accomplish the goals of mitigating the loss of the rural adjustment for existing FY 2005 rural IRFs. The incremental steps needed to reduce the impact of the loss of the FY 2005 rural adjustment of 19.14 percent will be phased out for years FY 2006, FY 2007, and FY 2008.

Thus, the budget neutral 3 year hold harmless policy will apply to the existing FY 2005 rural IRFs (under the MSA-based designation) that will change designations and experience a reduction in payments due to the loss of the FY 2005 rural adjustment of 19.14 percent and meets the intent of this policy. The hold harmless policy will allow existing FY 2005 rural IRFs adversely affected by the change in designation to receive two-thirds of the FY 2005 rural adjustment of 19.14 percent (specifically 12.76 percent hold harmless adjustment) for FY 2006 as well as the blended wage index (comprised of 50 percent of the FY 2006 MSA-based wage index and 50 percent of the FY 2006 CBSA-based wage index both based on FY 2001 hospital data). For FY 2007, existing FY 2005 rural IRFs that are a part of the FY 2006 hold harmless policy will receive the full FY 2007 CBSA wage index and one-third of the FY 2005 rural adjustment of 19.14 percent (specifically, a 6.38 percent hold harmless adjustment). For FY 2008, existing FY 2005 rural IRFs that are a part of the FY 2006 hold harmless policy will receive the full FY 2008 CBSA-based wage index without a rural adjustment as long as the IRF is designated as urban under the FY 2008 CBSA-based designation (illustrated in Table 10 below).

TABLE 10.—IRF 3-YEAR HOLD HARMLESS POLICY FOR IRFS DESIGNATED AS RURAL UNDER THE MSA-BASED DESIGNATION

	FY 2006	FY 2007	FY 2008
Wage Index	50% of MSA Wage Index and 50% of CBSA Wage Index	Full FY 2007 CBSA Wage Index	Full FY 2008 CBSA Wage Index
Rural Adjustment (Phase out)*	12.76	6.38	N/A

*Based on the FY 2005 Rural Adjustment of 19.14 percent.

As is shown by the table, making incremental reductions to the 19.14 percent rural adjustment that certain rural IRFs received during FY 2005 results in these IRFs still being paid a portion of that rural adjustment in FY 2006 and FY 2007.

We believe that an incremental reduction of the FY 2005 rural adjustment of 19.14 percent is appropriate because of our analysis to implement a one third compared to a two thirds hold harmless adjustment of the 19.14 percent rural adjustment in FY 2006. We analyzed the 34 IRFs (in our analysis file) that would be impacted by the hold harmless policy to determine the effect on their IRF PPS payments if we did not implement a hold harmless policy. We also reviewed the payment impacts on these IRFs if the hold harmless policy implemented one third of the FY 2005 rural adjustment of 19.14 percent versus two thirds of the FY 2005 rural adjustment of 19.14 percent in FY 2006 (as described in the section XII).

We found that if we did not adopt a hold harmless policy, the 34 rural IRFs that change designations from a rural facility (under the MSA-based designations) to an urban facility (under the CBSA-based designations) would experience a significant reduction in per case payment. We also considered a one year hold harmless policy that would allow the 34 IRFs in our analysis to receive a blended wage index as well as only a one third of the FY 2005 rural adjustment of 19.14 percent. Based on our analysis, a one year hold harmless policy would slightly mitigate the payment reductions for rural IRFs in our analysis file.

Our analysis of whether a multi-year hold harmless policy would provide a sufficient buffer to the loss of payments, found that a 3 year hold harmless policy of two thirds of the 19.14 percent rural adjustment in the FY 2006 and one third in FY 2007 would be the most appropriate. Based on a 3 year hold harmless policy, we found these IRFs would be mitigated from significant payment reductions. We determined that a 3 year hold harmless policy that provides two thirds of the 19.14 percent adjustment in FY 2006 and one third in FY 2007 would appropriately mitigate the adverse payment impacts for existing FY 2005 rural IRFs that are designated as urban IRFs in FY 2006.

To determine whether an existing FY 2005 rural IRF would meet part of the criteria for the hold harmless policy, we have developed Table 2 in the addendum. Table 2 of this addendum is a crosswalk file of counties/areas in the United States and Puerto Rico that would change from a rural MSA-based designation to an urban area under the CBSA-based designation. These areas are listed in Table 2 of the addendum to identify areas affected by the budget neutral 3 year hold harmless policy as described in this section. Table 2 of the addendum provides the State and county code, State and county name, MSA number, MSA rural designations, FY 2006 MSA-based wage index, FY 2006 CBSA-based wage index, CBSA number, CBSA urban designations, and the applicable FY 2006 transition wage index as described in section VI.2.B.e. The FIs will also be instructed to use Table 2 of the addendum to identify IRFs in these areas that will be impacted by the budget neutral 3 year hold harmless policy (as discussed in detail in this section) based on the FI's existing data in the provider specific file.

As a conforming change to §412.624(e), we are finalizing the hold harmless policy by adding new paragraph (e)(7). Paragraph (e)(7) of §412.624(e) will read as follows: Adjustments for certain facilities geographically redesignated in FY 2006.

(i) *General.* For a facility defined as an urban facility under §412.602 in FY 2006 that was previously defined as a rural facility in FY 2005 as the term rural was defined in FY 2005 under §412.602 and whose payment, after applying the adjustment under this paragraph, will be lower only because of being defined as an urban facility in FY 2006 and it no longer qualified for the rural adjustment under §412.624(e)(3) in FY 2006, CMS will adjust the facility's payment using the following method:

(A) For discharges occurring on or after October 1, 2005, and on or before September 30, 2006, the facility's payment will be increased by an adjustment of two thirds of its prior FY 2005 19.14 percent rural adjustment.

(B) For discharges occurring on or after October 1, 2006, and on or before September 30, 2007, the facility's payment will be increased by an adjustment of one third of its FY 2005 19.14 percent rural adjustment.

(ii) *Exception.* For discharges occurring on or after October 1, 2005 and on or before September 30, 2007, facilities whose payments, after applying the adjustment under this paragraph (e)(7)(i) of this section, will be higher because of being defined as an urban facility in FY 2006 and no longer being qualified for the rural adjustment under 412.624(e)(3) in FY 2006, CMS will adjust the facility's payment by a portion of the applicable additional adjustment described in paragraph (e)(7)(i)(A) and (e)(7)(i)(B) of this section as determined by us.

In addition, we did not receive comments regarding section 505 of the MMA that established a new section 1886(d)(13) of the Act. As discussed in the FY 2006 IRF PPS proposed rule (70 FR 30188), the new section 1886(d)(13) requires that the Secretary establish a process to make adjustments to the hospital wage index based on commuting patterns of hospital employees. We believe that this requirement for an ''out-commuting'' or ''out-migration'' adjustment applies specifically to the IPPS. Therefore, we are not implementing such an adjustment for the IRF PPS in this final rule.

Comment: A number of commenters advised us that Table 3 of the FY 2006 IRF PPS proposed rule contained a formatting problem that resulted in provider numbers, provider names, state and county location, MSA-based designation, and CBSA-based designations to be misaligned.

Response: Once this error was brought to our attention, we immediately published a public use file on our webpage to show the provider level

table as developed in Microsoft Excel. The web address for the FY 2006 IRF PPS proposed rule's public use files may be found at *http://www.cms.hhs.gov/providers/irfpps/fy06nprm.asp.* Table 3, as published in the FY 2006 IRF PPS proposed rule (70 FR 30188), was produced for informational purposes only. Therefore, the information an IRF's FI has on file for each IRF will not be altered based on Table 3. We will not be reproducing a provider level table that crosswalks the MSA-based and CBSA-based designations for this final rule as it was only published in the proposed rule to help facilitate the public's understanding of the proposed policy.

For the purposes of determining a wage index for FY 2006 IRF PPS rate year, we will publish a crosswalk table (Table 1 of this addendum) listing the State and county code, State and county name, the MSA-based designations, CBSA-based designations and the blended wage index (comprised of 50 percent of the FY 2006 MSA-based wage index and 50 percent of the FY 2006 CBSA-base wage index both based on the FY 2001 hospital wage data) for discharges occurring on or after October 1, 2005 and on or before September 30, 2006. In the FY 2006 IRF PPS proposed rule (70 FR 30188), we published a FY 2006 CBSA urban and rural wage index table to illustrate the proposed policy to fully adopt the FY 2006 CBSA wage index. Since we are no longer fully adopting the FY 2006 CBSA wage index, we will publish a table for FIs to determine an IRFs blended wage index values for FY 2006 (specifically a blend of 50 percent FY 2006 MSA-based wage index and 50 percent of the FY 2006 CBSA-based wage index). Thus, Table 1 of this addendum will be used by FIs to determine the FY 2006 one-year blended transitional wage index (comprised of FY 2006 MSA-based and FY 2006 CBSA-based wage index) as finalized in this rule.

Final Decision: In summary (as discussed in detail above in the comments and responses, and based on further analysis of various policy options to implement the CBSA-based designations), we will implement a budget neutral one-year transition policy that blends the FY 2006 MSA-based wage index and FY 2006 CBSA-based wage index (both based on FY 2001 hospital wage data) for discharges occurring on or after October 1, 2005 and on or before September 30, 2006 for all IRFs. In addition to the blended wage index for FY 2006, we will implement a budget neutral 3 year hold harmless policy for existing FY 2005 rural IRFs that will lose the FY 2005 rural adjustment of 19.14 percent, experience a loss in payments due to the change from an MSA-based rural designation to a CBSA-based urban designation, and meets the intent of the hold harmless policy (as discussed in detail above).

f. Wage Index Data

In the August 7, 2001 final rule, we established an IRF wage index based on FY 1997 acute care hospital wage data to adjust the FY 2002 IRF payment rates. For the FY 2003 IRF PPS payment rates, we applied the same wage adjustment as used for FY 2002 IRF PPS rates because we determined that the application of the wage index and labor-related share used in FY 2002 provided an appropriate adjustment to account for geographic variation in wage levels that was consistent with the statute. For the FY 2004 IRF PPS payment rates, we used the hospital wage index based on FY 1999 acute care hospital wage data. For the FY 2005 IRF PPS payment rates, we used the hospital wage index based on FY 2000 acute care hospital wage data. As was proposed in the FY 2006 IRF PPS proposed rule (70 FR 30188) and for this final rule, we will use FY 2001 acute care hospital wage data for FY 2006 IRF PPS payment rates because it is the most recent final data available. As was proposed in the FY 2006 IRF PPS proposed rule (70 FR 30188), and for this final rule, we will adopt the methodology discussed in the proposed rule (70 FR at 30188, 30241) to calculate a wage index in the event that there is no hospital data for an area (urban or rural) under the CBSA-based designations (70 FR 30188, 30241).

A summary of public comments and our responses on the wage index data are discussed below:

Comment: Many commenters argue that a majority of IRFs are hospital units and should be treated the same as hospitals whereby IRFs should be allowed to be reclassified to the same geographic area as the hospital. One commenter urged CMS to develop instructions and begin collecting IRF-specific wage index data in order to allow IRFs to establish a geographic reclassification criteria for IRFs. Commenters also urged CMS to use FY 2002 hospital wage data for the FY 2006 IRF PPS rate year because it is more current than the finalized data available. One commenter request that CMS develop a ''rural floor'' like that of IPPS.

Response: In the August 1, 2001 final rule (66 FR at 41358) we established FY 2002 IRF PPS wage index values for the 2002 IRF PPS fiscal year calculated from the same data used to compute the FY 2001 acute care hospital inpatient wage index data without taking into account geographic reclassification under sections 1886(d)(8) and (d)(10) of the Act and without applying the ''rural floor'' under section 4410 of Pub. L. 105–33 (BBA) (as discussed in section VI.B.2.a of this final rule). Acute care hospital inpatient wage index data is also used to establish the wage index adjustment used in other PPSs (for example, LTCH, IPF, HHA, and SNF). As we discussed in the August 7, 2001 final rule (66 FR at 41316, 41358), since hospitals that are excluded from the IPPS are not required to provide wage-related information on the Medicare cost report and because we would need to establish instructions for the collection of this IRF data it is not appropriate at this time to implement a wage index specific to IRF facilities. Because we do not have an IRF specific wage index that we can compare to the hospital wage index, we are unable to determine at this time the degree, if any, to which the acute care hospital data fully represent IRF wages or if a geographic reclassification adjustment under the IRF PPS is appropriate.

Although commenters request CMS to develop a ''rural floor'' like the IPPS, we believe the ''rural floor'' is applicable only to the acute care hospital payment system. Furthermore, as stated in section VI.B.2, section 4410 of the Balanced Budget Act of 1997 (Pub. L. 105–33) applies specifically to acute care hospitals and not excluded hospitals and excluded units. Thus, we believe that the acute care hospital ''pre-reclassification and pre-floor'' wage data is the best proxy and most appropriate wage index. In addition and as discussed above in section VI.B.2.e we will implement a blended wage index to mitigate the impacts an IRF may experience as a result of the change from MSA-based designations to CBSA-based designations. Furthermore, under the IRF PPS, IRFs are paid a rural adjustment under § 412.624(e)(3) as discussed in detail in section VI.B.4 to account for higher costs among rural facilities versus urban facilities.

Although commenters request instructions to be developed in order to collect IRF specific wage data, we did not propose to develop instructions at this time. At this time, we are unable to develop a separate wage index for rehabilitation facilities. Further, in order to accumulate the data needed, we would need to make modifications to the cost report. In the future, we will continue to research wage data specific to IRF facilities. Because we do not have an IRF specific wage index that we can compare to the hospital wage index, we are unable to determine at this time the degree to which the acute care hospital

data fully represents IRF wages. However, we continue to believe it is an appropriate proxy because the hospital wage data is currently the most appropriate data for adjusting payments made to IRFs.

Several comments request the ability to allow IRFs to reclassify like that of acute care hospitals. To emphasize and as discussed in section VI.B.2, we believe that actual location of an IRF as opposed to the location of affiliated providers is most appropriate for determining the wage adjustment because the data support the premise that the prevailing wages in the area in which a facility is located influences the cost of a case. As demonstrated by the update rural adjustment and research conducted by RAND. The research and findings that update the rural adjustment is discussed in detail in section VI.B.4. We continue to review the facility adjustment to account for higher costs in different types of IRFs by updating our facility adjustments.

Final Decision: We believe that a wage index based on acute care hospital wage data is the best proxy and most appropriate wage index to use in adjusting payments to IRFs, since both acute care hospitals and IRFs compete in the same labor markets. Since acute care hospitals compete in the same labor market areas as IRFs, the wage data of acute care hospitals would accurately capture the relationship of wages and wage-related costs of IRF in an area as comparable to the national average.

Therefore, as we proposed in the FY 2006 proposed rule (70 FR 30188) and for this final rule, we continue to believe that a wage index based on acute care hospital data is the best and most appropriate wage index to use in adjusting payments to IRFs, since both acute care hospitals and IRFs compete in the same labor markets. Also, we will continue to use the same method for calculating wage indices as was indicated in the August 7, 2001 final rule (69 FR at 41357 through 41358). In addition, 1886(d)(8) and 1886(d)(10) of the Act which permits reclassification is applicable only to inpatient acute care hospitals at this time. The wage adjustment established under the IRF PPS is based on an IRF's actual location without regard to the urban or rural designation of any related or affiliated provider. Therefore, we continue to believe reclassification of IRFs is inappropriate at this time.

In adopting the CBSA-based designations, we recognize that there may be geographic areas where there are no hospitals, and thus no hospital wage data on which to base the calculation of the IRF PPS wage index. We found that for FY 2006, this occurred in two States—Massachusetts and Puerto Rico—where, using the CBSA-based designations, there were no hospitals located in rural areas. If rural IRFs open in Massachusetts or Puerto Rico for FY 2006, we proposed and for this final rule, we are using the rural FY 2001 MSA-based hospital wage data for Massachusetts and Puerto Rico to determine the wage index of such IRFs. In other words, we proposed and as finalized in this final rule, we will use the same wage data (the FY 2001 hospital wage data) used to calculate the FY 2006 IRF wage index. However, as we proposed in the FY 2006 proposed rule (70 FR 30188), for this final rule, rather than using CBSA-based designations, we will use MSA-based designations to determine the rural wage index of any States where there is no wage data available under the CBSA-based designations. By using such MSA-based designations there will be rural wage indices for both Massachusetts and Puerto Rico. We believe this is the most reasonable approach, as we are using the same hospital wage data used to calculate the CBSA-based wage indices.

In the event this occurs in urban areas where IRFs are located, as we proposed in the FY 2006 proposed rule (70 FR 30188), for this final rule, we will use the average of the urban hospital wage data throughout the State as a reasonable proxy for the urban areas without hospital wage data. Therefore, urban IRFs located in geographic areas without any hospital wage data will receive a wage index based on the average wage index for all urban areas within the State. This does not presently affect any urban IRFs for FY 2006 because there are no IRFs located in urban areas without hospital wage data. However, the policy will apply to future years when there may be urban IRFs located in geographic areas with no corresponding hospital wage data.

We believe this policy is reasonable because it maintains a CBSA-based wage index system, while creating an urban proxy for IRFs located in urban areas without corresponding hospital wage data. We note that we could not apply a similar averaging in rural areas, because in the rural areas there is no State rural hospital wage data available for averaging on a State-wide basis. For example, in Massachusetts and Puerto Rico, using a CBSA-based designation system, there are simply no rural hospitals in the State upon which we could base an average.

In addition, we note that the Secretary has broad authority under 1886(j)(6) to update the wage index on the basis of information available to the Secretary (and updated as appropriate) of the wages and wage-related costs incurred in furnishing rehabilitation services. Therefore, for FY 2006, as we proposed in the FY 2006 proposed rule (70 FR 30188), for this final rule, we will use FY 2001 MSA-based hospital wage data for rural Massachusetts and rural Puerto Rico in the event there are rural IRFs in such States. To clarify for rural areas without hospital wage data, we will use the most recent final years wage index available. In addition, for FY 2006 and thereafter, we are finalizing our proposed policy to calculate a statewide urban average in the event that there exist urban IRFs in geographic areas with no corresponding hospital wage data. Although we solicited comments on these approaches to calculate the wage index values for areas without hospital wage data for this and subsequent fiscal years, we did not receive any comments regarding our proposed methodology as discussed in our FY 2006 IRF PPS proposed rule. As a result, for any urban areas where there is no urban hospital wage data, we will calculate an average of the urban hospital wage data throughout the State as a reasonable proxy.

For the reasons discussed above, as we proposed in the FY 2006 proposed rule (70 FR 30188), for this final rule, we will continue the use of the acute care hospital inpatient wage index data generated from cost reporting periods beginning during FY 2001 without taking into account geographic reclassification as specified under sections 1886(d)(8) and (d)(10) of the Act and without applying the ''rural floor'' under section 4410 of Pub. L. 105–33 (BBA) (as discussed in section VI.B.2.a of this final rule). We believe that data from FY 2001 cost reporting periods to determine the applicable wage index values under the IRF PPS in this final rule are appropriate because these are the most recent final available data. These data are the same FY 2001 acute care hospital inpatient wage data that were used to compute the IPPS FY 2005 wage indices. The final IRF wage indices are computed as follows:

- Compute an average hourly wage for each urban and rural area.
- Compute a national average hourly wage.
- Divide the average hourly wage for each urban and rural area by the national average hourly wage—the result is a wage index for each urban and rural area.

The one-year blended wage index values that are applicable for IRF PPS discharges occurring on or after October

1, 2005 and on or before September 30, 2006 are shown in Table 1 of the addendum of this final rule.

In addition, for this final rule as we proposed in the FY 2006 proposed rule (70 FR 30188), any adjustment or update to the IRF wage index made as specified under section 1886(j)(6) of the Act will be made in a budget neutral manner that assures that the estimated aggregated payments under this subsection in the FY year are not greater or less than those that will have been made in the year without such adjustment. Therefore, as we proposed in the FY 2006 proposed rule (70 FR 30188), for this final rule, we will calculate a budget-neutral wage adjustment factor as specified in § 412.624(e)(1). We will continue to use the following steps to ensure that the FY 2006 IRF standard payment conversion factor reflects the one-year blended FY 2006 MSA and CBSA wage indices (both based on FY 2001 hospital wage data) and to the labor-related share in a budget neutral manner:

Step 1 Determine the total amount of the estimated FY 2005 IRF PPS rates using the FY 2005 standard payment conversion factor and the labor-related share and the wage indices from FY 2005 (as published in the July 30, 2004 final notice).

Step 2 Calculate the total amount of estimated IRF PPS payments using the FY 2005 standard payment conversion factor and the updated CBSA-based FY 2006 labor-related share and FY 2006 blended wage indices described above.

Step 3 Divide the amount calculated in step 1 by the amount calculated in step 2, which equals the FY 2006 budget-neutral wage adjustment factor of 0.9995 (as discussed in section VI.B.7 and VI.B.8).

Step 4 Apply the FY 2006 budget-neutral wage adjustment factor from step 3 to the FY 2005 IRF PPS standard payment conversion factor after the application of the market basket update, described above, to determine the FY 2006 standard payment conversion factor.

3. Teaching Status Adjustment

In the FY 2006 proposed rule (70 FR 30188), we proposed to implement a teaching status adjustment for IRFs that are, or are part of, teaching institutions. Section 1886(j)(3)(A)(v) of the Act requires the Secretary to adjust the prospective payment rates for the IRF PPS by such factors as the Secretary determines are necessary to properly reflect variations in necessary costs of treatment among rehabilitation facilities. Under this authority, in the August 7, 2001 final rule (66 FR 41316, 41359), we considered implementing an adjustment for IRFs that are, or are part of, teaching institutions. However, because the results of our regression analysis, using FY 1999 data, showed that the indirect teaching cost variable was not significant, we did not implement a payment adjustment for indirect teaching costs in that final rule. The regression analysis conducted by RAND for the FY 2006 proposed rule (70 FR 30188), using FY 2003 data, shows that the indirect teaching cost variable is significant in explaining the higher costs of IRFs that have teaching programs. Therefore, we proposed to establish a facility level adjustment to the Federal per discharge base rate for IRFs that are, or are part of, teaching institutions for the reasons discussed below (the ''teaching status adjustment'').

The purpose of the proposed teaching status adjustment is to account for the higher indirect operating costs experienced by facilities that participate in graduate medical education programs.

We proposed to implement the proposed teaching status adjustment in a budget neutral manner (that is, keeping estimated aggregate payments for FY 2006 with the proposed teaching adjustment the same as estimated aggregate payments for FY 2006 without the proposed teaching adjustment) for the reasons discussed below. (As a conforming change, we proposed to revise § 412.624 by adding a new section (e)(4) as the teaching status adjustment. Specifically, § 412.624(e)(4) would be for discharges on or after October 1, 2005. We proposed to adjust the Federal prospective payment on a facility basis by a factor that we specified for facilities that are teaching institutions or units of teaching institutions. We proposed that this adjustment be made on a claim basis as an interim payment and the final payment in full for the claim would be made during the final settlement of the cost report. Thus, we proposed to redesignate the current (e)(4) and (e)(5) as (e)(5) and (e)(6)).

Medicare makes direct graduate medical education (GME) payments (for direct costs such as resident and teaching physician salaries, and other direct teaching costs) to all teaching hospitals including those paid under the IPPS, and those that were once paid under the TEFRA rate of increase limits but are now paid under other PPSs. These direct GME payments are made separately from payments for hospital operating costs and are not part of the PPSs. However, the direct GME payments may not address the higher indirect operating costs which may often be experienced by teaching hospitals. For teaching hospitals paid under the TEFRA rate-of-increase limits, Medicare did not make separate medical education payments because payments to these hospitals were based on the hospitals' reasonable costs. Because payments under TEFRA were based on hospitals' reasonable costs, the higher indirect costs that might be associated with teaching programs would automatically have been factored into the TEFRA payments.

When the IRF PPS was implemented, we did not adjust payments to IRFs for indirect medical education costs because we did not find that adjustments for such costs were supported by the regression analyses or by the impact analyses. As discussed in the August 7, 2001 final rule (69 FR 41316, 41359), the indirect teaching variable was not significant for either the fully specified regression or the payment regression in RAND's analysis. Furthermore, the impacts among the various classes of facilities reflecting the fully phased-in IRF PPS illustrated that IRFs with the highest measure of indirect teaching would lose approximately 2 percent of estimated payments under the IRF PPS when compared with payments under TEFRA rate-of-increase limits. These impacts did not account for changes in behavior that facilities were likely to adopt in response to the inherent incentives of the IRF PPS, and we believed that IRFs could change their behavior to mitigate any potential reduction in payments.

The earlier research conducted by RAND was based on 1999 data and on a sample of IRFs. RAND recently conducted research to support us in developing potential refinements to the IRF classification system and the PPS. The regression analysis conducted by RAND for this final rule, using FY 2003 data, showed that the indirect teaching cost variable is significant in explaining the higher costs of IRFs that have teaching programs.

In conducting the analysis on the FY 2003 data, RAND used the resident counts that were reported on the hospital cost reports (worksheet S–3, Part 1, line 25, column 9 for freestanding IRF hospitals and worksheet S–3, Part 1, line 14 (or line 14.01 for subprovider 2), column 9 for rehabilitation units of acute care hospitals). That is, for the freestanding rehabilitation hospitals, RAND used the number of residents and interns reported for the entire hospital. For the rehabilitation units of acute care hospitals, RAND used the number of residents and interns reported for the rehabilitation unit (reported separately

on the cost report from the number reported for the rest of the hospital). RAND did not distinguish between different types of resident specialties, nor did they distinguish among the different types of services residents provide, because this information is not reported on the cost reports.

RAND used regression analysis (with the logarithm of costs as the dependent variable) to re-examine the effect of IRFs' teaching status on the costs of care. With FY 2003 data that include all Medicare-covered IRF discharges, RAND found a statistically significant difference in costs between IRFs with teaching programs and those without teaching programs in the regression analysis. The different results obtained using the FY 2003 data (compared with the 1999 data) may be due to improvements in IRF coding after implementation of the IRF PPS. More accurately coded data may have allowed RAND to determine better the differences in case mix among hospitals with and without teaching programs, which would then have allowed the effect of whether or not an IRF has a teaching program to become significant in the regression analysis. There are two main reasons that indirect operating costs may be higher in teaching hospitals: (1) Because the teaching activities themselves result in inefficiencies that increase costs, and (2) because patients needing more costly services tend to be treated more often in teaching hospitals than in non-teaching hospitals, that is, the case mix that is drawn to teaching hospitals. Quantifying more precisely the amount of cost increase that is due to teaching hospitals' case mix allows RAND to more precisely quantify the amount of increase due to the inefficiencies associated with a teaching program.

We proposed to treat the teaching status adjustment as an additional payment to the Federal prospective payment rate, similar to the IME payments made under the IPPS (see § 412.105). In addition, we proposed that the teaching status adjustments for the IRF PPS facilities would be made on a claim basis as interim payments, but the final payment in full for the cost reporting period would be made through the cost report. The difference between those interim payments and the actual teaching status adjustment amount computed in the cost report would be adjusted through lump sum payments/recoupments when the cost report is filed and later settled.

As in the IPF PPS, we proposed to calculate a teaching adjustment based on the IRF's ''teaching variable,'' which would be one plus the ratio of the number of FTE residents training in the IRF (subject to limitations described further below) to the IRF's average daily census (ADC). In RAND's cost regressions for the FY 2006 proposed rule (70 FR 30188), using data from FY 2003, the logarithm of the teaching variable had a coefficient value of 1.083. We proposed to convert this cost effect to a teaching status payment adjustment by treating the regression coefficient as an exponent and raising the teaching variable to a power equal to the coefficient value, then estimated at 1.083 (that is, the teaching status adjustment would be calculated by raising the teaching variable (1 + FTE residents/ADC) to the 1.083 power). For a facility with a teaching variable of 0.10, and using a coefficient based upon the coefficient value (1.083) from the FY 2003 data, this method would yield a 10.9 percent increase in the per discharge payment; for a facility with a teaching variable of 0.05, the payment would increase by 5.4 percent. We note that the coefficient value of 1.083 was based on regression analysis holding all other components of the payment system constant. In the FY 2006 proposed rule (70 FR 30188) we noted that, because we were proposing a number of other revisions to the payment system, the coefficient value was subject to change for the final rule depending on the other revisions included in the final rule. Moreover, we noted that we had concerns that IRFs' responses to other proposed changes described in the FY 2006 proposed rule (70 FR 30188) would influence the effects of a teaching variable on IRFs' costs.

In addition, we proposed that the teaching adjustment limit the incentives for IRFs to add FTE residents for the purpose of increasing their teaching adjustment, as has been done in the payment systems for psychiatric facilities and acute inpatient hospitals. Thus, we proposed to impose a cap on the number of FTE residents that may be counted for purposes of calculating the teaching adjustment, similar to that established by sections 4621 (IME FTE cap for IPPS hospitals) and 4623 (direct GME FTE cap for all hospitals) of the BBA. We noted that the FTE resident cap already applies to teaching hospitals, including IRFs, for purposes of direct GME payments as specified in § 413.75 through § 413.83. The proposed cap would limit the number of residents that teaching hospitals may count for the purposes of calculating the IRF PPS teaching status adjustment, not the number of residents teaching institutions can hire or train.

The proposed FTE resident cap would be identical in freestanding teaching rehabilitation hospitals and in distinct part rehabilitation units with GME programs. Similar to the regulations for counting FTE residents under the IPPS as described in § 412.105(f), we proposed to calculate a number of FTE residents that trained in the IRF during a ''base year'' and use that FTE resident number as the cap. An IRF's FTE resident cap would ultimately be determined based on the final settlement of the IRF's most recent cost reporting period ending on or before November 15, 2003. We also proposed that, similar to new IPPS teaching hospitals, IRFs that first begin training residents after November 15, 2003 would initially receive an FTE cap of ''0''. The FTE caps for new IRFs (as well as existing IRFs) that start training residents in a new GME program (as defined in § 413.79(l)) may be subsequently adjusted in accordance with the policies that are being applied in the IPF PPS (as described in § 412.424(d)(1)(iii)(B)(2)), which in turn are made in accordance with the policies described in 42 CFR 413.79(e) for IPPS hospitals. However, contrary to the policy for IME FTE resident caps under the IPPS, we would not allow IRFs to aggregate the FTE resident caps used to compute the IRF PPS teaching status adjustment through affiliation agreements. We proposed these policies because we believe it is important to limit the total pool of resident FTE cap positions within the IRF community and avoid incentives for IRFs to add FTE residents in order to increase their payments. In proposing not to allow affiliation agreements, we also wanted to avoid the possibility of hospitals transferring residents between IPPS and IRF training settings in order to increase Medicare payments. We recognize that under the regulations applicable to the IPPS IME adjustment, a new teaching hospital that trains residents from an existing program (not a new program as defined in 42 CFR 413.79(l)) can receive an adjustment to its IME FTE cap by entering into a Medicare GME affiliation agreement (see § 412.105(f)(1)(vi), § 413.75(b), and § 413.79(f)) with other hospitals. However, this option would not be available to new teaching IRFs because, as noted above, we proposed not to allow IRFs to aggregate the FTE resident caps used to compute the IRF PPS teaching adjustment through affiliation agreements.

We also proposed that residents with less than full-time status and residents rotating through the rehabilitation hospital or unit for less than a full year

be counted in proportion to the time they spend in their assignment with the IRF (for example, a resident on a full-time, 3-month rotation to the IRF would be counted as 0.25 FTEs for purposes of counting residents to calculate the ratio). No FTE resident time counted for purposes of the IPPS IME adjustment would be allowed to be counted for purposes of the teaching status adjustment for the IRF PPS.

We proposed that the denominator used to calculate the teaching status adjustment under the IRF PPS would be the IRF's average daily census (ADC) from the current cost reporting period because it is closely related to the IRF's patient load, which determines the number of interns and residents the IRF can train. We also believe the ADC is a measure that can be defined precisely and is difficult to manipulate. Although the IPPS IME adjustment uses the hospital's number of beds as the denominator, the capital PPS (as specified at § 412.322) and the IPF PPS (as specified at § 412.424) both use the ADC as the denominator for the indirect graduate medical education adjustments.

If a rehabilitation hospital or unit has more FTE residents in a given year than in the base year (the base year being used to establish the cap), we would base payments in that year on the lower number (the cap amount). This approach would be consistent with the IME adjustment under the IPPS and the IPF PPS. The IRF would be free to add FTE residents above the cap amount, but it would not be allowed to count the number of FTE residents above the cap for purposes of calculating the teaching adjustment. This means that the cap would be an upper limit on the number of FTE residents that may be counted for purposes of calculating the teaching status adjustment. IRFs could adjust their number of FTE residents counted for purposes of calculating the teaching adjustment as long as they remained under the cap.

On the other hand, if a rehabilitation hospital or unit were to have fewer FTE residents in a given year than in the base year (that is, fewer residents than its FTE resident cap), an adjustment in payments in that year would be based on the lower number (the actual number of FTE residents the facility hires and trains). We proposed to implement the teaching status adjustment in such a way that total estimated aggregate payments to IRFs for FY 2006 would be the same with and without the proposed adjustment (that is, in a budget neutral manner). This is because we believe that the results of RAND's analysis of 2002 and 2003 IRF cost data suggest that additional money does not need to be added to the IRF PPS. RAND's analysis found, for example, that if all IRFs had been paid based on 100 percent of the IRF PPS payment rates throughout all of 2002 (some IRFs were still transitioning to PPS payments during 2002), PPS payments during 2002 would have been 17 percent higher than IRFs' costs. We noted that we were open to examining other evidence regarding the amount of aggregate payments in the system.

An adjustment to payments based on an IRF's teaching status is consistent with section 1886 (j)(3)(A)(v) of the Act, which confers broad statutory authority upon the Secretary to adjust the per payment unit payment rate by such factors as the Secretary determines are necessary to properly reflect variations in necessary costs of treatment among rehabilitation facilities.

In the FY 2006 proposed rule, we discussed some concerns we had with implementing a teaching status adjustment at this time, including concerns about the volatility of the data, concerns about the effect that other proposed changes could have on the magnitude of the teaching status adjustment, and concerns about the best way to count residents who provide services to IRF patients. These concerns are described in more detail in the FY 2006 proposed rule (70 FR 30188). As a result of these concerns, we specifically solicited comments on our consideration of a teaching status adjustment.

Public comments and our responses on the proposed teaching status adjustment are summarized below.

Comment: Several commenters questioned CMS's rationale for not allowing affiliation agreements, if CMS is only concerned about not increasing the pool of residents in IRFs. One commenter suggested that allowing affiliation agreements among IRFs would not necessarily increase the total pool of residents in IRFs.

Response: In the FY 2006 proposed rule (70 FR 30188), we stated that we are not allowing IRFs to enter into affiliation agreements with IPPS hospitals for the purposes of aggregating the FTE resident caps because we want to avoid the possibility that hospitals will transfer residents between IPPS and IRF training settings in order to increase Medicare payments. In deciding on our proposal not to allow affiliation agreements under the IRF PPS, we considered several factors. First, in general, we considered that IPPS hospitals provide training to residents in a wide range of specialties. Because of the wide variety of training provided, IPPS hospitals often need to send residents to train at other hospitals, since the case mix of one hospital might not be sufficiently broad to provide residents with an acceptable range of training opportunities in a particular specialty. The broad nature of the training offered at IPPS hospitals, and hence, the need to cross-train residents, is a primary reason for permitting IPPS hospitals under the Balanced Budget Act of 1997 to enter into GME affiliation agreements with other IPPS hospitals. However, because IRFs are a highly specialized type of provider, we do not believe that a significant amount of cross-training is required among IRFs. Although we imagine that there could be instances in which residents training in one IRF could receive a different type of training experience in another IRF, we believe these situations are likely to be limited and do not warrant having an affiliation agreement policy to allow IRFs to aggregate their FTE resident caps for the teaching status adjustment. Furthermore, we note that even without a specific affiliations policy, IRFs are not precluded from cross-training residents amongst themselves or with IPPS hospitals. If cross-training is necessary, it can be done in such a way that the overall number of FTE residents training in each facility remains unchanged. Accordingly, we are finalizing our proposed policy to not create a specific GME affiliation provision for the IRF teaching status adjustment. In the future, if we find there is in fact a need to allow affiliation agreements among IRFs, we may consider revising this policy in a future rulemaking process.

Comment: Several commenters noted possible inaccuracies in the teaching status information for a few of the facilities in the rate setting file we posted on the CMS website in conjunction with the FY 2006 proposed rule (70 FR 30188).

Response: To clarify, the rate setting file posted on the CMS website will not be used to determine payments for providers. The fiscal intermediaries use their own data files to determine whether the IRFs under their responsibility qualify for teaching status adjustment payments and the amounts of any such payments. Therefore, if providers have concerns about their particular teaching status data, they should contact their fiscal intermediaries to ensure that the fiscal intermediaries have the correct information.

With regard to the information in the rate setting file posted on the CMS website, this information was used to compute the value of the coefficient used as the exponent in the formula for

the proposed teaching status adjustment. Consequently, we asked RAND to investigate the accuracy of the information. RAND has made the appropriate corrections to the information and, using the revised information, has recomputed the coefficient used as the exponent. Based on this and the incorporation of the HealthSouth home office cost data from FY 2004 (as described in detail in section IV of this final rule), we have revised the exponent from 1.083, which is what we had proposed in the FY 2006 proposed rule (70 FR 30188), to 0.9012 for this final rule.

Comment: Several commenters objected to our proposal to implement the proposed teaching adjustment based on analysis of one year of data. However, several other commenters suggested that such concerns were unfounded and did not warrant overriding RAND's statistically valid findings.

Response: Since publication of the FY 2006 proposed rule (70 FR 30188), RAND has further analyzed FY 2002 and FY 2003 data, and has found that the teaching status variable is significantly related to costs in both sets of data. Furthermore, we believe that IRFs with teaching programs may have been underrepresented in the 1998 and 1999 data used to construct the IRF PPS, and that this may have contributed to the lack of a statistically significant finding using the pre-PPS data. In addition, the statistically significant difference in costs between teaching and non-teaching facilities has been validated in other inpatient settings, including IPPS hospitals and IPFs. Therefore, we are reassured that this result does not represent an aberration based on only a single year's data, but instead represents a result of using more recent, more complete data. However, we will continue to evaluate the need for this adjustment in the future. If we later find that the other refinements described in this final rule constitute enough of an improvement to the system by more appropriately accounting for the variation in costs among different types of IRF patients that the teaching status adjustment becomes unnecessary, we will consider eliminating the adjustment in the future. However, we believe there is enough evidence at this time that IRFs with teaching programs have higher costs to implement the adjustment.

Comment: One commenter requested that CMS change the data that will be used to establish the FTE resident cap for IRFs from our proposal to use IRFs' most recent cost reporting periods ending on or before November 15, 2003, to use IRFs' most recent cost reporting periods ending on or before November 15, 2004 to ensure that the FTE resident caps will be based on the most accurate historical resident count data possible.

Response: We agree with this commenter and are revising our methodology for setting the FTE resident cap accordingly. Since we published the FY 2006 proposed rule (70 FR 30188), the FTE resident cap used for the teaching status adjustment for IPFs has been set similarly based on cost reporting periods ending on or before November 15, 2004. We believe this change is appropriate and maintains consistency within the Medicare program.

Comment: One commenter requested that CMS have a process in place for re-examining the teaching status data, especially the data used to set the FTE resident cap, so that facilities would have the opportunity to rectify any problems with the data that might affect payments.

Response: We agree with this commenter. We recognize that there may be problems with some of the resident count data on the historical cost reports, since this data has not previously been used for payment adjustments in the IRF PPS. For this reason, we proposed in the FY 2006 proposed rule (70 FR 30188) that an IRF's FTE resident cap would ultimately be determined based on the final settlement of the IRF's most recent cost reporting period ending on or before November 15, 2003 and, based on this and the previous comment (refer to the response above), we are changing this to the final settlement of the IRF's most recent cost reporting period ending on or before November 15, 2004. We believe this will allow facilities the opportunity to ensure the accuracy of the FTE resident count data before the final settlement of the cost report data. In case this does not occur, we will authorize the fiscal intermediaries to resolve any disputes that may occur regarding the data used to set an IRF's FTE resident cap and correct any inaccuracies.

With regard to the FTE resident count data or the average daily census data used to compute an IRF's teaching status adjustment, we specifically note in this final rule that any teaching status adjustments for the IRF PPS facilities will be made on a claim basis as interim payments, but the final payments in full for the cost reporting periods will be made through the final settlement of the cost report. The difference between the interim payments and the actual teaching status adjustment amounts computed in the cost reports will be adjusted through lump sum payments/recoupments when the cost report is filed and later settled. We believe this process gives providers and fiscal intermediaries ample opportunity to ensure that the data used to compute the teaching status adjustment payments is as complete and accurate as possible. As the proposed teaching status adjustment is implemented, we will monitor the situation and issue further guidance to the fiscal intermediaries as necessary to ensure fair and accurate payments for this adjustment.

Comment: The majority of commenters expressed support for CMS eventually implementing an IRF teaching status adjustment, especially since teaching IRFs were likely underrepresented in the 1998 and 1999 data used in the August 7, 2001 final rule to design the IRF PPS. However, while supporting the adjustment, several commenters suggested that CMS wait to implement a teaching status adjustment for at least a year, until data from FY 2004 (or later) can be analyzed.

Response: CMS considered carefully the suggestion to wait an additional year or more before implementing the proposed teaching status adjustment. However, RAND's regression analyses of calendar year 2002 and FY 2003 data both support the need for a teaching status adjustment for IRFs because they both indicate that IRFs with teaching programs have significantly higher costs than IRFs without teaching programs. Given RAND's findings, we believe it is important to adjust IRF payments accordingly in order to better align IRF payments with the costs of care. In addition, we believe it is important to maintain consistency with other parts of the Medicare program, such as the IPF PPS that recently instituted a teaching status adjustment for IPFs based on regression analysis that shows that IPFs with teaching programs have significantly higher costs than IPFs without teaching programs.

Comment: Several commenters strongly disagreed with the proposed implementation of a teaching status adjustment for IRFs. Among the reasons cited were that it was based on analysis of a single year of data, that it would support inefficiencies in teaching hospitals (when the purpose of a PPS is to encourage providers to operate efficiently), that the data do not adequately support the need for a teaching status adjustment, that it would reduce payments to non-teaching hospitals, and that teaching hospitals would likely continue to operate even if they do not receive the adjustment.

Response: We carefully considered these comments. However, we continue

to believe that an IRF teaching status adjustment is warranted at this time because RAND's regression analysis, based on calendar year 2002 and FY 2003 data shows that IRFs with teaching programs have significantly higher costs than non-teaching IRFs. Although we do not believe it is appropriate to encourage or perpetuate inefficiencies, we believe that IRFs with teaching programs provide a valuable service to beneficiaries and to the Medicare program. To the extent that the residency training services, therefore, lead to higher indirect costs of providing care, we believe it is important to recognize these differences and encourage access to care in these facilities. While, as one commenter notes, teaching IRFs more than likely would continue to operate even without the IRF teaching status adjustment, the intent of the adjustment is to better align payments in these facilities with the costs of care.

Furthermore, we believe that IRFs with teaching programs may have been underrepresented in the 1998 and 1999 data used to construct the IRF PPS, and that this may have contributed to the lack of a statistically significant finding using the pre-PPS data. In addition, the statistically significant difference in costs between teaching and non-teaching facilities has been validated in other inpatient settings, including IPPS hospitals and IPFs.

We proposed, and are finalizing in this final rule, to implement the IRF teaching status adjustment in a budget neutral manner in order to ensure that estimated aggregate payments to IRFs for FY 2006 will be the same with or without the teaching status adjustment. Given that the impact on IRFs without teaching programs of this provision is not large (see Table 13 of this final rule), we do not believe that implementing the teaching status adjustment in a budget neutral manner will unduly affect non-teaching IRFs. However, the teaching status adjustment will help to better align payments with the costs of care in teaching IRFs.

Furthermore, we believe that a teaching status adjustment for IRFs is consistent with the teaching status adjustment recently implemented in the IPF PPS.

Comment: One commenter suggested that CMS track the percentage of time residents spend in the rehabilitation unit of the hospital to compute the teaching adjustment, instead of using the resident and intern to ADC ratio we proposed in the proposed rule.

Response: This information is not currently captured in the cost report data, which would make this suggestion substantially more difficult to implement than the teaching status variable we proposed in the FY 2006 proposed rule (70 FR 30188). We also believe that collecting this type of information would impose additional costs on acute care hospitals that have IRF units, because they would be required to record the amount of time residents spend on rehabilitation units. We also believe that it would be difficult if not impossible to audit this type of information.

Comment: One commenter suggested that CMS focus the teaching adjustment on rehabilitation education programs, to the exclusion of other resident training programs.

Response: Information on resident specialties is not currently reported in the cost report data. We believe that collecting and reporting this new type of data would impose undue additional costs on IRFs and on hospitals that have IRF units. Furthermore, we believe that this policy would contradict the way that residency programs traditionally operate because they require residents from different specialties to rotate in different areas of the hospital to gain experience in various areas of medicine.

Comment: One commenter recommended that an exception process be allowed to enable IRF teaching programs to apply for an increase in their cap should a compelling reason arise, such as an expansion of the teaching hospital or unit or the addition of a new program.

Response: Similar to the GME resident cap policy for IPPS hospitals, we will not allow exceptions to the FTE resident caps for IRFs due to expansions of existing facilities or additions of new teaching programs. As we indicated previously, we believe it is important to limit the total pool of FTE resident cap positions within the IRF community.

Final Decision: After carefully considering all of the comments we received on the proposed IRF teaching status adjustment, we are finalizing our decision to adopt the proposed policy in this final rule, with the following revisions.

In RAND's most recent cost regressions using data from FY 2003, including the HealthSouth home office cost data from FY 2004 (as described in detail in section IV of this final rule), the logarithm of the teaching variable has a coefficient value of 0.9012 (as opposed to the coefficient value of 1.083 we proposed in the FY 2006 proposed rule (70 FR 30188)). In the final policy, we are converting this cost effect to a teaching status payment adjustment by treating the regression coefficient as an exponent and raising the teaching variable to a power equal to the coefficient value of 0.9012 (that is, the teaching status adjustment would be calculated by raising the teaching variable (1 + FTE residents/ADC) to the 0.9012 power).

Secondly, based on a commenter's suggestion, we are changing the base period for determining an IRF's FTE resident cap from the final settlement of the IRF's most recent cost reporting period ending on or before November 15, 2003, which was what we had proposed in the FY 2006 proposed rule (70 FR 30188), to the final settlement of the IRF's most recent cost reporting period ending on or before November 15, 2004. Thus, the policy in the IRF PPS would be consistent with the FTE resident cap policy in the IPF PPS.

4. Adjustment for Rural Location

In the FY 2006 proposed rule (70 FR 30188), we proposed to update the adjustment to the Federal prospective payment amount for IRFs located in rural areas from 19.14 percent to 24.1 percent, based on analysis of FY 2003 data. Consistent with the broad statutory authority conferred upon the Secretary in section 1886(j)(3)(A)(v) of the Act, we adjust the Federal prospective payment amount associated with a CMG to account for an IRF's geographic wage variation, low-income patients and, if applicable, teaching status and location in a rural area, as described in § 412.624(e).

Under the broad statutory authority conferred upon the Secretary in section 1886(j)(3)(A)(v) of the Act, we proposed to increase the adjustment to the Federal prospective payment amount for IRFs located in rural areas from 19.14 percent to 24.1 percent. We proposed this change because RAND's regression analysis, using the best available data we had (FY 2003), indicated that rural facilities had 24.1 percent higher costs of caring for Medicare patients than urban facilities. We noted that we proposed to use the same statistical approach, as described in the November 3, 2000 proposed rule (65 FR 66304, 66356 through 66357) and adopted in the August 7, 2001 final rule (66 FR at 41359) to estimate the proposed update to the rural adjustment. The statistical approach RAND used when the PPS was first implemented, for the FY 2006 proposed rule (70 FR 30188), and for this final rule relies on the coefficient determined from the regression analysis. The 19.14 percent rural adjustment has been applied to payments for IRFs located in rural areas since the implementation of the IRF PPS. We noted that the FY 2003 data are the best available data we have, just as the 1998

and 1999 data used in the initial development of the IRF PPS were the best available data at that time.

We proposed to implement the proposed update to the rural adjustment so that total estimated aggregate payments for FY 2006 are the same with the proposed update to the adjustment as they would have been without the proposed update to the adjustment (that is, in a budget neutral manner). We proposed to make this update to the rural adjustment in a budget neutral manner because we believed and continue to believe that the results of RAND's analysis of 2002 and 2003 IRF cost data (as discussed previously in section IV of this final rule) suggest that additional money does not need to be added to the IRF PPS. RAND's analysis found, for example, that if all IRFs had been paid based on 100 percent of the IRF PPS payment rates throughout all of 2002 (some IRFs were still transitioning to PPS payments during 2002), PPS payments during 2002 would have been 17 percent higher than IRFs' costs.

This is consistent with section 1886(j)(3)(A)(v) of the Act which confers broad statutory authority upon the Secretary to adjust the per payment unit payment rate by such factors as the Secretary determines are necessary to properly reflect variations in necessary costs of treatment among rehabilitation facilities. To ensure that total estimated aggregate payments to IRFs do not change, we proposed to apply a factor to the standard payment amount to ensure that the estimated aggregate payments under this subsection in the FY are not greater or less than those that would have been made in the year without the proposed update to the adjustment. In sections VI.B.7 and VI.B.8 of this final rule, we discuss the methodology and factor we proposed to apply to the standard payment amount.

Public comments and our responses on the proposed update to the rural adjustment are summarized below.

Comment: Overall, commenters generally supported this proposal. Some said that CMS should delay implementing the proposal until the full effects of the 75 percent rule can be analyzed.

Response: For the reasons discussed in section IV of this final rule, we do not believe we should wait until the full effects of the 75 percent rule can be analyzed before implementing any of the proposed changes in this final rule. Making the changes now does not preclude us from making additional revisions in the future if we find any potential effects of the 75 percent rule on IRFs' case mix or cost structures that would warrant such refinements.

Comment: One commenter expressed concerns that the proposed increases to the facility-level adjustments would encourage inefficiencies in the provision of care.

Response: While we agree with the commenter that one of the purposes of a PPS is to encourage the efficient provision of services, we also believe it is important to recognize that certain providers, such as those operating in rural areas, may incur higher costs than other providers, for reasons largely beyond their control. To encourage the efficient provision of care in rural areas, so that Medicare beneficiaries have adequate access to IRF services in these areas, we believe it is important to recognize the differential in costs between urban and rural providers.

Final Decision: After carefully considering all of the comments we received on this proposed change to the rural adjustment, we are finalizing our decision to adopt the update to the rural adjustment in this final rule, with the following change.

In RAND's most recent cost regressions using data from FY 2003, including the HealthSouth home office cost data from FY 2004 (as described in detail in section IV of this final rule), rural facilities were found to have 21.3 percent higher costs of caring for Medicare patients than urban facilities (rather than the 24.1 percent we proposed in the FY 2006 proposed rule (70 FR 30188)). Thus, we are implementing a rural adjustment of 21.3 percent.

5. Adjustment for Disproportionate Share of Low-Income Patients

In the FY 2006 proposed rule (70 FR 30188), we proposed to update the low-income patient (LIP) adjustment to the Federal prospective payment rate, based on analysis of FY 2003 data. Consistent with the broad statutory authority conferred upon the Secretary in section 1886(j)(3)(A)(v) of the Act, we adjust the Federal prospective payment amount associated with a CMG to account for an IRF's geographic wage variation, low-income patients and, if applicable, teaching status and location in a rural area, as described in § 412.624(e).

Under the broad statutory authority conferred upon the Secretary in section 1886(j)(3)(A)(v) of the Act, we proposed to update the low-income patient (LIP) adjustment to the Federal prospective payment rate to account for differences in costs among IRFs associated with differences in the proportion of low-income patients they treat. RAND's regression analysis of 2003 data indicates that the LIP formula could be updated to better distribute current payments among facilities according to the proportion of low-income patients they treat. Although the formula used prior to October 1, 2005 appropriately distributed LIP-adjusted payments among facilities when the IRF PPS was first implemented, we believe the formula should be updated from time to time to reflect changes in the costs of caring for low-income patients.

The proposed LIP adjustment is based on the formula used to account for the costs of furnishing care to low-income patients as discussed in the August 7, 2001 final rule (67 FR at 41360). We proposed to update the LIP adjustment from the power of 0.4838 to the power of 0.636. Therefore, the formula we proposed to use to calculate the LIP adjustment was as follows:

(1 + DSH patient percentage) raised to the power of (0.636)

$$\frac{\text{Medicare SSI Days}}{\text{Total Medicare Days}} + \frac{\text{Medicaid, NonMedicare Days}}{\text{Total Days}}$$

We note that we proposed to use the same statistical approach, as described in the August 7, 2001 final rule (66 FR at 41359 through 41360), that was used to develop the original LIP adjustment. We note that the FY 2003 data we proposed to use in calculating this adjustment are the best available data, just as the 1998 and 1999 data used in the initial development of the IRF PPS were the best available data at that time.

We proposed to implement this update to the LIP adjustment so that total estimated aggregate payments for FY 2006 would be the same with the proposed update to the adjustment as they would have been without the update to the adjustment (that is, in a budget neutral manner). We proposed to make this proposed update to the LIP adjustment in a budget neutral manner because we believed and continue to believe that the results of RAND's analysis of 2002 and 2003 IRF cost data (as discussed previously in this final rule) suggest that additional money does not need to be added to the IRF PPS.

RAND's analysis found, for example, that if all IRFs had been paid based on 100 percent of the IRF PPS payment rates throughout all of 2002 (some IRFs were still transitioning to PPS payments during 2002), PPS payments during 2002 would have been 17 percent higher than IRFs' costs.

This is consistent with section 1886 (j)(3)(A)(v) of the Act which confers broad statutory authority upon the Secretary to adjust the per payment unit payment rate by such factors as the Secretary determines are necessary to properly reflect variations in necessary costs of treatment among rehabilitation facilities. To ensure that total estimated aggregate payments to IRFs do not change, we proposed to apply a factor to the standard payment amount to ensure that the estimated aggregate payments under this subsection in the FY are not greater or less than those that would have been made in the year without the proposed update to the adjustment. In sections VI.B.7 and VI.B.8 of this final rule, we discuss the methodology and factor we proposed to apply to the standard payment amount.

Public comments and our responses on the proposed update to the LIP adjustment are summarized below.

Comment: Overall, commenters generally supported this proposal. Some said that CMS should delay implementing the proposal until the full effects of the 75 percent rule can be analyzed.

Response: For the reasons discussed in section IV of this final rule, we do not believe we should wait until the full effects of the 75 percent rule can be analyzed before implementing any of the proposed changes in this final rule. Making the changes now does not preclude us from making additional revisions in the future if we find any potential effects of the 75 percent rule on IRFs' case mix or cost structures that would warrant such refinements.

Comment: One commenter expressed concerns that the proposed increases to the facility-level adjustments would encourage inefficiencies in the provision of care.

Response: While we agree with the commenter that one of the purposes of a PPS is to encourage the efficient provision of services, we also believe it is important to recognize that certain providers, such as those providers that treat a higher proportion of low-income patients, may incur higher costs than other providers, for reasons largely beyond their control. To encourage the efficient provision of care among providers that treat a large number of low-income patients, so that low-income Medicare beneficiaries have adequate access to IRF services, we believe it is important to recognize the higher costs these providers incur.

Final Decision: After carefully considering all of the comments we received on this proposed change to the LIP adjustment, we are finalizing our decision to adopt the proposed policy in this final rule, with the following change.

Based on RAND's most recent cost regressions using data from FY 2003, including the HealthSouth home office cost data from FY 2004 (as described in detail in section IV of this final rule), we are updating the LIP adjustment to the power of 0.6229 (rather than the value of 0.636 we proposed in the FY 2006 proposed rule (70 FR 30188)). Therefore, the formula for calculating the LIP adjustment will be as follows: (1 + DSH patient percentage) raised to the power of (0.6229) where the DSH patient percentage =

$$\frac{\text{Medicare SSI Days}}{\text{Total Medicare Days}} + \frac{\text{Medicaid, NonMedicare Days}}{\text{Total Days}}$$

6. Update to the Outlier Threshold Amount

In the FY 2006 proposed rule (70 FR 30188), we proposed to update the outlier threshold amount, based on analysis of FY 2003 data. Consistent with the broad statutory authority conferred upon the Secretary in sections 1886(j)(4)(A)(i) and 1886(j)(4)(A)(ii) of the Act, we proposed to update the outlier threshold amount from the $11,211 threshold amount for FY 2005 to $4,911 in FY 2006 to maintain total estimated outlier payments at 3 percent of total estimated payments. In the August 7, 2001 final rule, we discussed our rationale for setting estimated outlier payments at 3 percent of total estimated payments (66 FR at 41362). In the FY 2006 proposed rule (70 FR 30188), we proposed to continue using 3 percent for the same reasons outlined in the August 7, 2001 final rule. We believed and continue to believe that it is necessary to update the outlier threshold amount because RAND's analysis of the calendar year 2002 and FY 2003 data indicates that total estimated outlier payments will not equal 3 percent of total estimated payments in FY 2006 unless we update the outlier loss threshold. We will continue to analyze the estimated outlier payments for subsequent years and adjust as appropriate in order to maintain estimated outlier payments at 3 percent of total estimated payments. The reasons for estimated outlier payments not equaling 3 percent of total estimated payments are discussed in more detail below.

Section 1886(j)(4) of the Act provides the Secretary with the authority to make payments in addition to the basic IRF prospective payments for cases incurring extraordinarily high costs. In the August 7, 2001 final rule, we codified at § 412.624(e)(4) of the regulations (which we proposed to redesignate as § 412.624(e)(5) in the FY 2006 proposed rule (70 FR 30188)) the provision to make an adjustment for additional payments for outlier cases that have extraordinarily high costs relative to the costs of most discharges. Providing additional payments for outliers strongly improves the accuracy of the IRF PPS in determining resource costs at the patient and facility level because facilities receive additional compensation over and above the adjusted Federal prospective payment amount for uniquely high-cost cases. These additional payments reduce the financial losses that would otherwise be caused by treating patients who require more costly care and, therefore, reduce the incentives to underserve these patients.

Under § 412.624(e)(4) (which we proposed to redesignate as § 412.624(e)(5) in the FY 2006 proposed rule (70 FR 30188)), we would make outlier payments for any discharges if the estimated cost of a case exceeds the adjusted IRF PPS payment for the CMG plus the adjusted threshold amount. In the FY 2006 proposed rule (70 FR 30188), we proposed to make this $4,911, which would then be adjusted for each IRF by the facility's wage adjustment, its LIP adjustment, its rural adjustment, and its teaching status adjustment, if applicable. In the FY 2006 proposed rule (70 FR 30188), we stated that we would calculate the estimated cost of a case by multiplying the IRF's overall cost-to-charge ratio by the Medicare allowable covered charge. In accordance with § 412.624(e)(4) (which we proposed in the FY 2006 proposed rule (70 FR 30188) to

redesignate as § 412.624(e)(5)), we also stated that we would pay outlier cases 80 percent of the difference between the estimated cost of the case and the outlier threshold (the sum of the adjusted IRF PPS payment for the CMG and the adjusted fixed threshold dollar amount).

Consistent with the broad statutory authority conferred upon the Secretary in sections 1886(j)(4)(A)(i) and 1886(j)(4)(A)(ii) of the Act, and in accordance with the methodology stated in the August 1, 2003 final rule (68 FR at 45692 through 45693), we proposed in the FY 2006 proposed rule (70 FR 30188) to continue to apply a ceiling to an IRF's cost-to-charge ratios (CCR). Also, in the August 1, 2003 final rule (68 FR at 45693 through 45694), we stated the methodology we use to adjust IRF outlier payments and the methodology we use to make these adjustments. We indicated that the methodology is codified in § 412.624(e)(4) (which we proposed in the FY 2006 proposed rule (70 FR 30188) to redesignate as § 412.624(e)(5)) and § 412.84(i)(3).

On February 6, 2004, we issued manual instructions in Change Request 2998 stating that we would set forth the upper threshold (ceiling) and the national CCRs applicable to IRFs in each year's annual notice of prospective payment rates published in the **Federal Register**. The upper threshold CCR for IRFs that we proposed in the FY 2006 proposed rule (70 FR 30188) for FY 2006 would be 1.52 based on CBSA-based geographic designations. We proposed to base this upper threshold CCR on the CBSA-based geographic designations because the CBSAs are the geographic designations we proposed in the FY 2006 proposed rule (70 FR 30188) to adopt for purposes of computing the proposed wage index adjustment to IRF payments for FY 2006.

In addition, in the FY 2006 proposed rule (70 FR 30188), we proposed to update the national urban and rural CCRs for IRFs. Under § 412.624(e)(4) (which we proposed in the FY 2006 proposed rule (70 FR 30188) to redesignate as § 412.624(e)(5)) and § 412.84(i)(3), we proposed to apply the national CCRs to the following situations:

- New IRFs that have not yet submitted their first Medicare cost report.
- IRFs whose operating or capital CCR is in excess of 3 standard deviations above the corresponding national geometric mean.
- Other IRFs for whom accurate data with which to calculate either an operating or capital CCR (or both) are not available.

In the FY 2006 proposed rule (70 FR 30188), we proposed to use the national CCR based on the facility location of either urban or rural in each of the three situations cited above. Specifically, for FY 2006, we estimated a proposed national CCR of 0.631 for rural IRFs and 0.518 for urban IRFs. For new facilities, we proposed to use these national ratios until the facility's actual CCR could be computed using the first tentative settled or final settled cost report data, which would then be used for the subsequent cost report period.

In the August 7, 2001 final rule (66 FR at 41362 through 41363), we describe the process by which we calculate the outlier threshold. In the FY 2006 proposed rule (70 FR 30188), we proposed to use this same process for the FY 2006 IRF PPS. We proposed to simulate aggregate payments with and without an outlier policy, and then apply an iterative process to determine a threshold that would result in the simulated outlier payments being equal to 3 percent of total simulated payments under the simulation. In the FY 2006 proposed rule (70 FR 30188), we noted that the simulation analysis used to calculate the proposed outlier threshold amount included all of the other proposed changes to the PPS discussed in the FY 2006 proposed rule (70 FR 30188). As stated in the FY 2006 proposed rule (70 FR 30188), we proposed to continue to analyze the estimated outlier payments for subsequent years and adjust as appropriate in order to maintain estimated outlier payments at 3 percent of total estimated payments.

In the FY 2006 proposed rule (70 FR 30188), we proposed to update the threshold amount so that estimated outlier payments would continue to equal 3 percent of total estimated payments under the IRF PPS. RAND found that 2002 outlier payments were equal to 3.1 percent of total payments in 2002. Nevertheless, the outlier loss threshold is affected by cost-to-charge ratios because the cost-to-charge ratios are used to compute the estimated cost of a case, which in turn is used to determine if a particular case qualifies for an outlier payment or not. For example, if the cost-to-charge ratio decreases, then the estimated costs of a case with the same reported charges would decrease. Thus, the chances that the case would exceed the outlier loss threshold and qualify for an outlier payment would decrease, decreasing the likelihood that the case would qualify for an outlier payment. If fewer cases were to qualify for outlier payments, then total estimated outlier payments could fall below 3 percent of total estimated payments.

As we discussed in the FY 2006 proposed rule (70 FR 30188), our analyses of cost report data from FY 1999 through FY 2002 (and projections for FY 2004 through FY 2006) indicate that the overall cost-to-charge ratios in IRFs have been falling since the IRF PPS was implemented. We are still analyzing possible reasons for this finding. However, because cost-to-charge ratios are used to determine whether a particular case qualifies for an outlier payment, this drop in the cost-to-charge ratios is likely responsible for much of the drop in total estimated outlier payments below 3 percent of total estimated payments. Thus, as we discussed in the FY 2006 proposed rule (70 FR 30188), the outlier threshold would need to be lowered for FY 2006 in order that total estimated outlier payments would equal 3 percent of total estimated payments.

In addition, we proposed in the FY 2006 proposed rule (70 FR 30188) to adjust the outlier threshold for FY 2006 because RAND's analysis of calendar year 2002 and FY 2003 data indicates that many of the other proposed changes discussed in the FY 2006 proposed rule (70 FR 30188) would affect what the outlier threshold would need to be in order for total estimated outlier payments to equal 3 percent of total estimated payments. The outlier loss threshold is affected by the definitions of all other elements of the IRF PPS, including the structure of the CMGs and the tiers, the relative weights, the policies for very short-stay cases and for cases in which the patient expires in the facility (that is, cases that qualify for the special CMG assignments), and the facility-level adjustments (such as the rural adjustment, the LIP adjustment, and the proposed teaching status adjustment). In the FY 2006 proposed rule (70 FR 30188), we proposed to change many of these components of the IRF PPS. For the reasons discussed above and in the FY 2006 proposed rule (70 FR 30188), then, we believed and continue to believe that it is appropriate to update the outlier loss threshold for FY 2006. We also stated in the FY 2006 proposed rule (70 FR 30188) that we expect to continue to adjust the outlier threshold in the future when the data indicate that total estimated outlier payments would deviate from equaling 3 percent of total estimated payments.

Public comments and our responses on the proposed update to the outlier threshold amount are summarized below.

Comment: One commenter suggested that CMS notify fiscal intermediaries that, as a result of the lowering of the outlier threshold amount, more cases would likely qualify for outlier payments. Such notification would enable the fiscal intermediaries to adjust their systems accordingly.

Response: We agree with the commenter's suggestion and will notify the fiscal intermediaries about the change to the outlier threshold amount and the implications of this for the number of cases that qualify for outlier payments.

Comment: Several commenters requested that CMS incorporate any unused outlier payments from years in which aggregate outlier payments are below the 3 percent target back into the base payments.

Response: We have responded to similar comments a number of times in the context of other prospective payment systems, including in rules at 70 FR 24168, 24196–24197, 57 FR 39784, 58 FR 46347, 59 FR 45408, 60 FR 45856, 61 FR 27496, and 56 FR 43227, 61 FR 46229–46230. As we have explained before and as explained below, we do not make adjustments to PPS payment rates to account for differences between projected and actual outlier payments in a previous year. We believe our outlier policies are consistent with the statute and the goals of the prospective payment system and are equitable.

In accordance with section 1886(j)(4) of the Act, we implemented the IRF PPS outlier policy at 42 CFR 412.624(d)(1). These regulations provide that CMS determines a reduction factor equal to the estimated proportion of additional outlier payments described in paragraph (e)(4) of this section (which is redesignated as (e)(5) in this final rule). We set outlier criteria before the beginning of each fiscal year so that outlier payments are projected to equal 3 percent of estimated total IRF PPS payments. In doing so, we use the best available data at the time to make our estimates. We do not believe that Congress intended that the standardized amounts for a given fiscal year should be adjusted (upward or downward) to reflect any difference between projected and actual outlier payments for a past year. Payments for a given discharge in a given fiscal year are generally intended to reflect or address the average costs of that discharge in that year; that goal would be undermined if we adjusted PPS payments to account for ''underpayments'' or ''overpayments'' in other years.

Outlier payments are ''funded'' through a prospective adjustment to the base rates. We do not set money aside into a discrete ''pool'' dedicated solely for outlier payments. Outlier payments are based on estimates. If outlier payments for a given year turn out to be greater than projected, we do not recoup money from hospitals; if outlier payments for a given year are lower than projected, we do not make an adjustment to account for the difference. If estimates turn out to be inaccurate, we believe the more appropriate action is to continue to examine the outlier policy and to try to refine the methodology for setting outlier thresholds. Thus, consistent with this approach, for this final rule we are finalizing our decision to update the outlier threshold amount to $5,132 for FY 2006 to make estimated outlier payments equal to 3 percent of total estimated IRF PPS payments in FY 2006.

Comment: One commenter indicated a concern about the methodology used by CMS to estimate cost and charge growth for the purposes of calculating the outlier threshold amount. This commenter recommended an alternative methodology for the IPPS and encouraged CMS to apply that same methodology to the IRF PPS to ensure that the full 3 percent of outlier funds is used.

Response: We have reviewed the comments submitted for consideration in the IPPS, and we appreciate the alternative methodologies suggested by the commenters and have considered them carefully. The cost-to-charge ratio applied to charges provides Medicare the most accurate measure of a provider's per-case cost for the purpose of paying for high-cost outlier cases at the point that we process the initial claim. The cost-to-charge ratio is based on the providers' own cost and charge information as reported by the providers. For the purposes of this final rule, we have used the same methodology for projecting cost and charge growth that is used in the IPPS and in other Medicare payment systems, and we believe this methodology is appropriate for IRFs for the same reasons it is appropriate for IPPS hospitals. This methodology ensures that we pay the appropriate amounts over and above the standard PPS payment amount for unusually high-cost cases.

Comment: Overall, commenters generally supported the proposal to decrease the outlier threshold. Some said that CMS should delay implementing the proposal until the full effects of the 75 percent rule can be analyzed.

Response: For the reasons discussed in section IV of this final rule, we do not believe we should wait until the full effects of the 75 percent rule can be analyzed before implementing any of the proposed changes in this final rule. Making the changes now does not preclude us from making additional revisions in the future if we find any potential effects of the 75 percent rule on IRFs' case mix or cost structures that would warrant such refinements.

Final Decision: After carefully considering all of the comments we received on this proposed change to the outlier threshold amount, we are finalizing our decision to adopt the proposed policy in this final rule (including the redesignation of § 412.624(e)(4) as § 412.624(e)(5)), with the following change.

Using data from FY 2003, and including the HealthSouth home office cost data from FY 2004 (as described in detail in section IV of this final rule), RAND has calculated the outlier threshold amount of $5,132 (instead of the $4,911 outlier threshold amount we proposed in the FY 2006 proposed rule (70 FR 30188)) that would maintain estimated outlier payments at 3 percent of total estimated IRF payments for FY 2006. Therefore, we are finalizing our decision to set the FY 2006 outlier loss threshold at $5,132.

In addition, we are finalizing our decision to adopt the proposed upper threshold CCR for IRFs for FY 2006 of 1.52 based on CBSA-based geographic designations. We are basing this upper threshold CCR on the CBSA-based geographic designations because the CBSAs are the geographic designations we are adopting (with a one-year transition policy as described in section VI.B.2.e of this final rule) for the purposes of computing the wage index adjustment to IRF payments for FY 2006.

We are also finalizing our decision to update the national urban and rural CCRs for IRFs. Under § 412.624(e)(4) (which we are redesignating as § 412.624(e)(5) in this final rule), we will apply the national CCRs to the following situations:

- New IRFs that have not yet submitted their first Medicare cost report.
- IRFs whose operating or capital CCR is in excess of 3 standard deviations above the corresponding national geometric mean.
- Other IRFs for whom data with which to calculate either an operating or capital CCR (or both) are not available.

The national CCR based on the facility location of either urban or rural will be used in each of the three situations cited above. Specifically, for FY 2006, we are adopting a national CCR of 0.631 for

rural IRFs and 0.518 for urban IRFs. For new facilities, we will use these national ratios until the facility's actual CCR can be computed using the first tentative settled or final settled cost report data, which will then be used for the subsequent cost report period.

7. Budget Neutrality Factor Methodology for Fiscal Year 2006

In the FY 2006 proposed rule (70 FR 30188), we proposed to make a revision (for FY 2006) to the methodology found in § 412.624(d) in order to make the proposed changes to the tiers and CMGs, the rural adjustment, the LIP adjustment, and the proposed teaching status adjustment in a budget neutral manner. Accordingly, we proposed to revise § 412.624(d) by adding a section § 412.624(d)(4) for fiscal year 2006 and, as applicable, for fiscal years thereafter to the extent the adjustments are updated in the future. Specifically, we proposed to revise the methodology found in § 412.624(d) by adding a new paragraph (d)(4). The addition of this paragraph would provide for the application of a factor, as specified by the Secretary, which would be applied to the standard payment amount in order to make the proposed changes described in the preamble of the FY 2006 proposed rule (70 FR 30188) in a budget neutral manner for FY 2006. In addition, this paragraph would be used in future years if we propose refinements to the above-cited adjustments.

Final Decision: We did not specifically receive any comments on the proposed budget neutrality factor methodology for FY 2006. Therefore, we are finalizing our decision to adopt this budget neutrality factor methodology for FY 2006, with the change that we are incorporating HealthSouth home office cost data from FY 2004 (as described in detail in section IV of this final rule) into the data we used previously to compute the budget neutrality factors. Based on RAND's analysis of FY 2003 data, including the HealthSouth home office cost data from FY 2004 (as described in detail in section IV of this final rule) and using the methodology described in section VI.B.8 of this final rule, we will apply the market basket increase factor (estimated for this final rule to be 3.6 percent) to the standard payment conversion factor for FY 2005 ($12,958), which equals $13,425. Then, we will apply a one-time reduction to the standard payment amount of 1.9 percent to adjust for coding changes that increased payment to IRFs (as discussed in section VI.A of this final rule), which equals $13,169. We will then apply the budget neutral wage adjustment (as discussed in section VI.B.2.f of this final rule) of 0.9995 to $13,169, which will result in a standard payment amount of $13,163. For FY 2006 and any applicable FYs thereafter, to the extent any of the adjustments are updated, we will apply budget neutrality factors to the standard payment amount using § 412.624(c)(3)(ii), which incorporates by reference § 412.624(d)(4), for the applicable changes to the tiers and CMGs, the rural adjustment, the LIP adjustment, and the teaching status adjustment we are finalizing in this final rule. We note that even if we do not update any of the adjustments (and therefore utilize § 412.624(d)(4)), we will use § 412.624(c)(3) to update the payment rates for FY 2006 and thereafter. The next section contains a detailed explanation of these budget neutrality factors we are finalizing in this final rule, including the steps for computing these factors and how they will affect total estimated aggregate payments and estimated payments to individual IRF providers. The factors we will apply (as discussed in the next section) are 0.9995 for the tier and CMG changes, 0.9889 for the teaching status adjustment, 0.9961 for the change to the rural adjustment, and 0.9851 for the change to the LIP adjustment. We have combined these factors, by multiplying the four factors together, into one budget neutrality factor for all four of these changes (0.9995 * 0.9889 * 0.9961 * 0.9851 = 0.9699). We will apply this overall budget neutrality factor to $13,163, resulting in a standard payment conversion factor for FY 2006 of $12,767. Note that the FY 2006 standard payment conversion factor will be lower than it was in FY 2005 because it needs to be reduced to ensure that estimated aggregate payments for FY 2006 will remain the same as they otherwise would have been without the proposed changes. If we do not decrease the standard payment conversion factor, each of the changes we are finalizing in this final rule would increase total estimated aggregate payments by increasing payments to rural and teaching facilities, and to facilities with a higher average case mix of patients and facilities that treat a higher proportion of low-income patients. To assess how overall estimated payments to a particular type of IRF will likely be affected by any of the changes we are finalizing in this final rule, please see Table 13 of this final rule.

The FY 2006 standard payment conversion factor would be applied to each CMG relative weight shown in Table 4, Relative Weights for Case-Mix Groups, to compute the unadjusted IRF prospective payment rates for FY 2006 shown in Table 12. To further clarify, the budget neutrality factors described above will only be applied for FY 2006 and in applicable years thereafter to the extent the adjustments are updated. Therefore, for fiscal years 2006 and thereafter, we will generally use the methodology as described in § 412.624(c)(3)(ii).

8. Description of the Methodology Used To Implement the Changes in a Budget Neutral Manner

Section 1886(j)(2)(C)(i) of the Act confers broad statutory authority upon the Secretary to adjust the classification and weighting factors in order to account for relative resource use. In addition, section 1886(j)(2)(C)(ii) provides that insofar as the Secretary determines that such adjustments for a previous fiscal year (or estimates of such adjustments for a future fiscal year) did (or are likely to) result in a change in aggregated payments under the classification system during the fiscal year that are a result of changes in the coding or classification of patients that do not reflect real changes in case mix, the Secretary shall adjust the per payment unit payment rate for subsequent years to eliminate the effect of such coding or classification changes. Similarly, section 1886(j)(3)(A)(v) of the Act confers broad statutory authority upon the Secretary to adjust the per discharge payment rate by such factors as the Secretary determines are necessary to properly reflect variations in necessary costs of treatment among IRFs. Consistent with this broad statutory authority, we proposed in the FY 2006 proposed rule (70 FR 30188) to better distribute aggregate payments among IRFs to more accurately reflect their case mix and the increased costs associated with IRFs that have teaching programs, are located in rural areas, or treat a high proportion of low-income patients.

Furthermore, to ensure that total estimated aggregate payments to IRFs would not change with these proposed changes, we also proposed in the FY 2006 proposed rule (70 FR 30188) to apply a factor to the standard payment amount for each of the proposed changes to ensure that estimated aggregate payments in FY 2006 would not be greater or less than those that would have been made in the year without the proposed changes.

Final Decision: We did not specifically receive any comments on the description of the methodology used to implement the changes in a budget neutral manner. Therefore, we are finalizing our decision to adopt this

budget neutrality factor methodology for FY 2006, with the change that we are incorporating HealthSouth home office cost data from FY 2004 (as described in detail in section IV of this final rule) into the data we used previously to compute the budget neutrality factors. Based on RAND's analysis of FY 2003 data, including the HealthSouth home office cost data from FY 2004 (as described in detail in section IV of this final rule) and using the methodology described below, we will apply the budget neutrality factors to the standard payment amount for each of the changes described below to ensure that estimated aggregate payments in FY 2006 will be the same with or without the changes. We are finalizing our decision in this final rule to calculate these four factors using the following steps:

Step 1 Determine the FY 2006 IRF PPS standard payment amount using the FY 2005 standard payment conversion factor increased by the estimated market basket of 3.6 percent (estimated for this final rule) and reduced by 1.9 percent to account for coding changes (as discussed in section VI.A of this final rule).

Step 2 Multiply the CBSA-based budget neutrality factor discussed in this preamble by the standard payment amount computed in step 1 to account for the wage index and labor-related share (0.9995), as discussed in section VI.B.2.f of this final rule.

Step 3 Calculate the estimated total amount of IRF PPS payments for FY 2006 (with no change to the tiers and CMGs, no teaching status adjustment, and no changes to the rural and LIP adjustments).

Step 4 Apply the new tier and CMG assignments (as discussed in section V of this final rule) to calculate the estimated total amount of IRF PPS payments for FY 2006.

Step 5 Divide the amount calculated in step 3 by the amount calculated in step 4 to determine the factor (0.9995) that maintains the same total estimated aggregate payments in FY 2006 with and without the changes to the tier and CMG assignments.

Step 6 Apply the factor computed in step 5 to the standard payment amount from step 2, and calculate estimated total IRF PPS payment for FY 2006.

Step 7 Apply the change to the rural adjustment (as discussed in section VI.B.4 of this final rule) to calculate the estimated total amount of IRF PPS payments for FY 2006.

Step 8 Divide the amount calculated in step 6 by the amount calculated in step 7 to determine the factor (0.9961) that keeps total estimated payments in FY 2006 the same with and without the change to the rural adjustment.

Step 9 Apply the factor computed in step 8 to the standard payment amount from step 6, and calculate estimated total IRF PPS payment for FY 2006.

Step 10 Apply the change to the LIP adjustment (as discussed in section VI.B.5 of this final rule) to calculate the estimated total amount of IRF PPS payments for FY 2006.

Step 11 Divide the amount calculated in step 9 by the amount calculated in step 10 to determine the factor (0.9851) that maintains the same total estimated aggregate payments in FY 2006 with and without the change to the LIP adjustment.

Step 12 Apply the factor computed in step 11 to the standard payment amount from step 9, and calculate estimated total IRF PPS payments for FY 2006.

Step 13 Apply the teaching status adjustment (as discussed in section VI.B.3 of this final rule) to calculate the estimated total amount of IRF PPS payments for FY 2006.

Step 14 Divide the amount calculated in step 12 by the amount calculated in step 13 to determine the factor (0.9889) that maintains the same total estimated aggregate payments in FY 2006 with and without the teaching status adjustment.

As discussed in section VI.B.9 of this final rule, the FY 2006 IRF PPS standard payment conversion factor that accounts for the new tier and CMG assignments, the changes to the rural and the LIP adjustments, and the teaching status adjustment applies the following factors: the market basket update, the reduction of 1.9 percent to account for coding changes, the budget-neutral CBSA-based wage index and labor-related share budget neutrality factor of 0.9995, the tier and CMG changes budget neutrality factor of 0.9995, the rural adjustment budget neutrality factor of 0.9961, the LIP adjustment budget neutrality factor of 0.9851, and the teaching status adjustment budget neutrality factor of 0.9889.

Each of these budget neutrality factors lowers the standard payment amount. The budget neutrality factor for the tier and CMG changes lowers the standard payment amount from $13,163 to $13,156. The budget neutrality factor for the change to the rural adjustment lowers the standard payment amount from $13,156 to $13,105. The budget neutrality factor for the change to the LIP adjustment lowers the standard payment amount from $13,105 to $12,910. Finally, the budget neutrality factor for the teaching status adjustment lowers the standard payment amount from $12,910 to $12,767. As indicated previously, the standard payment conversion factor will be lowered in order to ensure that total estimated payments for FY 2006 with the changes equal total estimated payments for FY 2006 without the changes. This is because these four changes would otherwise result in an increase, on average, to total estimated aggregate payments to IRFs, because IRFs with teaching programs, IRFs located in rural areas, IRFs with higher case mix, and IRFs with higher proportions of low-income patients would receive higher payments. To maintain the same total estimated aggregate payments to all IRFs, then, we are redistributing payments among IRFs. Thus, some redistribution of payments occurs among facilities, while total estimated aggregate payments do not change. To determine how the changes we are finalizing in this final rule are estimated to affect payments among different types of facilities, please see Table 13 in this final rule.

9. Description of the IRF Standard Payment Conversion Factor for Fiscal Year 2006

In the August 7, 2001 final rule, we established a standard payment amount referred to as the budget neutral conversion factor under § 412.624(c). In accordance with the methodology described in § 412.624(c)(3)(i), the budget neutral conversion factor for FY 2002, as published in the August 7,2001 final rule, was $11,838.00. Under § 412.624(c)(3)(i), this amount reflects, as appropriate, any adjustments for outlier payments, budget neutrality, and coding and classification changes as described in § 412.624(d).

The budget neutral conversion factor is a standardized payment amount and the amount reflects the budget neutrality adjustment for FY 2002. The statute required a budget neutrality adjustment only for FYs 2001 and 2002. Accordingly, we believed it was more consistent with the statute to refer to the standard payment as a standard payment conversion factor, rather than refer to it as a budget neutral conversion factor. Consequently, we changed all references to budget neutral conversion factor to ''standard payment conversion factor.''

Under § 412.624(c)(3)(i), the standard payment conversion factor for FY 2002 of $11,838 reflected the budget neutrality adjustment described in § 412.624(d)(2). Under the then existing § 412.624(c)(3)(ii), we updated the FY 2002 standard payment conversion factor ($11,838) to FY 2003 by applying an increase factor (the market basket) of

3.0 percent, as described in the update notice published in the August 1, 2002 **Federal Register** (67 FR at 49931). This yielded the FY 2003 standard payment conversion factor of $12,193.00 that was published in the August 1, 2002 update notice (67 FR at 49931). The FY 2003 standard payment conversion factor ($12,193) was used to update the FY 2004 standard payment conversion factor by applying an increase factor (the market basket) of 3.2 percent and budget neutrality factor of 0.9954, as described in the August 1, 2003 **Federal Register** (68 FR at 45689). This yielded the FY 2004 standard payment conversion factor of $12,525 that was published in the August 1, 2003 **Federal Register** (68 FR at 45689). The FY 2004 standard payment conversion factor ($12,525) was used to update the FY 2005 standard payment conversion factor by applying an increase factor (the market basket) of 3.1 percent and budget neutrality factor of 1.0035, as described in the July 30, 2004 **Federal Register** (69 FR at 45766). This yielded the FY 2005 standard payment conversion factor of $12,958 as published in the July 30, 2004 **Federal Register** (69 FR at 45766).

In the FY 2006 proposed rule (70 FR 30188), we proposed to use the revised methodology in accordance with § 412.624(c)(3)(ii) and as described in section VI.B.7 of the FY 2006 proposed rule (70 FR 30188) to propose an update to the standard payment conversion factor for FY 2006.

Final Decision: We did not specifically receive any comments on the proposed standard payment conversion factor for FY 2006. Therefore, we are finalizing our decision to adopt the proposed methodology for computing the standard payment conversion factor, with the change that we are incorporating HealthSouth home office cost data from FY 2004 (as described in detail in section IV of this final rule) into the FY 2003 data we used previously to compute the final standard payment conversion factor for FY 2006. Based on RAND's analysis of FY 2003 data, including the HealthSouth home office cost data from FY 2004 (as described in detail in section IV of this final rule) and using the methodology we are finalizing in section VI.B.7 and section VI.B.8 of this final rule, we will calculate the standard payment conversion factor for FY 2006 by applying the market basket increase factor (estimated for this final rule to be 3.6 percent) to the standard payment conversion factor for FY 2005 ($12,958), which equals $13,425. Then, we will apply a one-time reduction to the standard payment amount of 1.9 percent to adjust for coding changes that increased payment to IRFs, which equals $13,169. We will then apply the budget neutral wage adjustment of 0.9995 to $13,169, which will result in a standard payment amount of $13,163. Next, we will apply a budget neutrality factor for FY 2006 for the budget-neutral refinements to the tiers and CMGs, the teaching status adjustment, the rural adjustment, and the adjustment for the proportion of low-income patients (of 0.9699) to $13,163, which will result in a standard payment conversion factor for FY 2006 of $12,767. The FY 2006 standard payment conversion factor will be applied to each CMG weight shown in Table 4 of this final rule, Relative Weights for Case-Mix Groups, to compute the unadjusted IRF prospective payment rates for FY 2006 shown in Table 12 of this final rule.

10. Example of the Methodology for Adjusting the Federal Prospective Payment Rates

To illustrate the methodology that we will use to adjust the Federal prospective payments (as described in section VI.B.7 and section VI.B.8 of this final rule), we provide an example in Table 11 below. Note that the methodology we are finalizing in this final rule has changed somewhat from the methodology we proposed in the FY 2006 proposed rule (70 FR 30188) because, upon further analysis, CMS discovered that the example used to illustrate the proposed adjustments to the Federal prospective payments in the FY 2006 proposed rule (70 FR 30188) did not calculate payments as accurately as the one we are finalizing in this final rule. Therefore, we have made a slight adjustment to the methodology we are finalizing in this final rule to ensure that payments are calculated as accurately as possible. Accordingly, we will multiply the teaching status adjustment, if applicable, by the wage adjusted Federal payment amount, rather than by the rural and LIP adjusted Federal payment amount as we proposed in the FY 2006 proposed rule (70 FR 30188), and add the resulting amount to the FY 2006 adjusted Federal prospective payment to compute the total FY 2006 adjusted Federal prospective payment (as illustrated in the following example).

We summarize 3 examples for computing total FY 2006 adjusted Federal prospective payment rates in Table 11 below. These examples are based on 3 beneficiaries classified into CMG 0110 (without comorbidities) receiving care in 3 different hypothetical IRFs. IRFs A, B, and C have the following characteristics:

- Facility A is a non-teaching IRF located in rural Duke County, Massachusetts with a disproportionate share hospital (DSH) adjustment of 5 percent (1.031) and the FY 2006 blended wage index of 1.0216;
- Facility B is a teaching IRF located in urban Queens County, New York with a disproportionate share hospital (DSH) adjustment of 10 percent (1.0612) and a FY 2006 blended wage index of 1.3449. The teaching status adjustment of 1.0910 will also be applied; and,
- Facility C is a non-teaching IRF located in Kings County, California with a disproportionate share hospital (DSH) adjustment of 20 percent (1.1203) and a FY 2006 blended wage index of 0.9797. The Kings County, California IRF was designated as a rural facility in FY 2005 (based on the MSA designation), but is classified as urban in FY 2006 (based on the CBSA designation). Therefore, this IRF will receive a hold harmless adjustment of 12.76 percent. The hold harmless adjustment applies to IRFs that are defined as rural under § 412.602 during FY 2005 and are classified as urban under § 412.602 in FY 2006 (as discussed in detail in section VI.B.2.e).

To calculate each IRF's total adjusted Federal prospective payment, we compute the wage-adjusted Federal prospective payment and multiply the result by the appropriate low-income patient adjustment, and the rural adjustment (if applicable). In order to calculate the teaching hospital adjustment (if applicable), we multiply the teaching adjustment by the Wage Adjusted Federal payment. Then, we apply the amount to the Adjusted Rural and LIP Federal Prospective Payment Rate. Table 11 illustrates the components of the adjusted payment calculation.

TABLE 11.—EXAMPLE OF COMPUTING AN IRF'S FEDERAL PROSPECTIVE PAYMENT

	Facility A Dukes County, MA	Facility B Queens County, NY	Facility C Kings County, CA
Federal Prospective Payment	$27,686.52	$27,686.52	$27,686.52

TABLE 11.—EXAMPLE OF COMPUTING AN IRF'S FEDERAL PROSPECTIVE PAYMENT—Continued

	Facility A Dukes County, MA	Facility B Queens County, NY	Facility C Kings County, CA
Labor Share	× 0.75865	× 0.75865	× 0.75865
Labor Portion of Federal Payment	= $21,004.38	= $21,004.38	= $21,004.38
FY 2006 Transition Wage Index (shown in Table 1 in the addendum)	× 1.0216	× 1.3449	× 0.9797
Wage-Adjusted Amount	= $21,458.07	= $28,248.79	= $20,577.99
Nonlabor Amount	$6,682.14	$6,682.14	$6,682.14
Wage-Adjusted Federal Payment	$28,140.21	$34,930.93	$27,260.13
Rural Adjustment	× 1.2130	× 1.0000	× 1.1276
Subtotal	= $34,134.08	= $34,930.93	= $30,738.52
LIP Adjustment	1.0310	1.0612	1.1203
FY 2006 Adjusted Rural and LIP Federal Prospective Payment Rate	$35,192.24	$37,068.70	$34,436.37
Wage-Adjusted Federal Payment	$28,140.21	$34,930.93	$27,260.13
Teaching status adjustment	× 1.0000	× 1.0900	× 1.0000
	= $28,140.21	= $38,074.71	= $27,260.13
Teaching Status addition to FY 2006 Adjusted Rural and LIP Federal Prospective Payment Rate	$0.00	$3,143.78	$0.00
Total FY 2006 Adjusted Federal Prospective Payment	$35,192.24	$40,212.49	$34,436.37

Thus, the adjusted payment for Facility A will be $35,192.24, the adjusted payment for Facility B will be $40,212.49, and the adjusted payment for Facility C will be $34,436.37.

TABLE 12.—FY 2006 PAYMENT RATE TABLE BASED ON ALL REFINEMENTS

CMG	Payment Rate Tier 1	Payment Rate Tier 2	Payment Rate Tier 3	Payment Rate No Comorbidity
0101	$9,819.10	$9,318.63	$8,278.12	$8,107.05
0102	12,091.63	11,476.26	10,194.45	9,983.79
0103	14,250.53	13,525.36	12,015.02	11,767.34
0104	15,140.39	14,369.26	12,765.72	12,501.45
0105	18,171.27	17,246.94	15,321.68	15,005.06
0106	21,151.09	20,074.83	17,834.22	17,465.26
0107	24,411.78	23,169.55	20,582.96	20,159.09
0108	28,222.73	26,786.44	23,796.41	23,304.88
0109	28,056.76	26,629.41	23,655.97	23,168.27
0110	33,528.70	31,823.02	28,269.97	27,686.52
0201	10,392.34	8,714.75	7,687.01	7,210.80
0202	13,324.92	11,174.96	9,856.12	9,244.58
0203	15,942.15	13,369.60	11,791.60	11,061.33
0204	17,051.61	14,300.32	12,612.52	11,831.18
0205	20,913.62	17,539.30	15,468.50	14,509.70
0206	27,294.57	22,891.23	20,189.73	18,937.29
0207	35,309.69	29,611.78	26,117.45	24,497.32
0301	14,417.77	12,174.61	10,775.35	9,912.30
0302	18,804.51	15,879.59	14,053.91	12,927.86
0303	22,438.00	18,947.50	16,770.73	15,426.37
0304	30,922.95	26,112.35	23,112.10	21,258.33
0401	12,627.84	10,873.65	9,774.42	8,728.80
0402	17,414.19	14,996.12	13,479.40	12,036.73
0403	30,312.69	26,103.41	23,464.47	20,953.20
0404	54,345.29	46,798.72	42,067.27	37,565.62
0405	41,463.39	35,705.47	32,094.96	28,660.64
0501	9,836.97	8,233.44	7,201.86	6,458.83
0502	13,170.44	11,023.03	9,642.92	8,648.37
0503	17,460.15	14,613.11	12,783.60	11,463.49
0504	21,857.10	18,292.56	16,002.16	14,350.11
0505	25,902.97	21,679.64	18,965.38	17,006.92
0506	35,245.86	29,499.43	25,804.66	23,141.46
0601	11,445.62	9,359.49	8,893.49	8,289.61
0602	15,224.65	12,450.38	11,831.18	11,025.58
0603	19,490.10	15,938.32	15,145.49	14,115.20
0604	24,945.44	20,400.39	19,384.14	18,066.58
0701	11,560.52	9,876.55	9,275.23	8,407.07
0702	15,010.16	12,823.17	12,041.83	10,914.51
0703	18,685.78	15,963.86	14,991.01	13,587.92

TABLE 12.—FY 2006 PAYMENT RATE TABLE BASED ON ALL REFINEMENTS—Continued

CMG	Payment Rate Tier 1	Payment Rate Tier 2	Payment Rate Tier 3	Payment Rate No Comorbidity
0704	22,932.09	19,590.96	18,397.25	16,676.26
0801	8,376.43	7,035.89	6,522.66	5,867.71
0802	10,941.32	9,189.69	8,519.42	7,665.31
0803	16,223.03	13,624.94	12,631.67	11,363.91
0804	14,131.79	11,868.20	11,002.60	9,899.53
0805	17,793.37	14,943.77	13,854.75	12,464.42
0806	21,354.08	17,933.80	16,626.46	14,957.82
0901	10,739.60	9,776.97	8,687.94	7,775.10
0902	14,112.64	12,847.43	11,416.25	10,216.15
0903	18,618.12	16,949.47	15,061.23	13,478.12
0904	23,339.35	21,248.12	18,879.84	16,895.85
1001	12,304.83	11,347.31	10,125.51	9,335.23
1002	16,225.58	14,961.65	13,350.45	12,308.66
1003	22,822.29	21,043.85	18,778.98	17,313.33
1101	16,014.92	13,400.24	11,731.60	10,803.44
1102	23,976.43	20,060.79	17,562.29	16,173.24
1201	13,001.91	11,227.30	10,348.93	9,341.61
1202	16,828.18	14,532.68	13,395.14	12,090.35
1203	20,731.05	17,901.89	16,501.35	14,893.98
1301	13,198.52	12,278.02	10,628.53	9,393.96
1302	18,287.45	17,012.03	14,725.46	13,015.96
1303	23,373.82	21,744.75	18,822.39	16,637.95
1401	10,433.19	9,386.30	8,165.77	7,412.52
1402	14,087.11	12,672.52	11,025.58	10,008.05
1403	17,535.47	15,774.91	13,724.53	12,459.32
1404	22,238.84	20,007.17	17,405.25	15,800.44
1501	11,773.73	11,483.92	9,813.99	9,443.75
1502	14,885.05	14,517.36	12,406.97	11,939.70
1503	18,217.23	17,767.83	15,185.07	14,611.83
1504	24,017.28	23,424.89	20,019.93	19,264.13
1601	12,849.99	10,908.12	9,870.17	8,814.34
1602	17,631.23	14,968.03	13,541.96	12,094.18
1603	21,688.58	18,411.29	16,658.38	14,877.39
1701	12,897.22	12,299.73	10,625.97	9,346.72
1702	16,986.49	16,198.77	13,995.19	12,311.22
1703	20,212.71	19,275.62	16,652.00	14,648.86
1704	25,288.87	24,115.59	20,834.47	18,327.03
1801	15,471.05	12,552.51	10,526.39	9,296.93
1802	24,748.83	20,079.94	16,839.67	14,872.28
1803	44,408.73	36,031.03	30,216.94	26,686.86
1901	15,782.57	14,019.44	13,631.33	11,935.87
1902	29,570.93	26,266.83	25,539.11	22,361.40
1903	42,691.57	37,921.82	36,872.37	32,283.91
2001	11,162.19	9,430.98	8,455.58	7,720.20
2002	14,615.66	12,348.24	11,070.27	10,107.63
2003	18,881.12	15,952.37	14,301.59	13,056.81
2004	25,222.49	21,310.68	19,104.54	17,443.55
2101	27,906.11	27,906.11	20,312.30	18,846.65
5001	0.00	0.00	0.00	2810.02
5101	0.00	0.00	0.00	18,108.32
5102	0.00	0.00	0.00	20,429.75
5103	0.00	0.00	0.00	9,197.35
5104	0.00	0.00	0.00	23,964.94

VII. Quality of Care in IRFs

The IRF–PAI is the patient data collection instrument for IRFs. Currently, the IRF–PAI contains a blend of the functional independence measures items and quality and medical needs questions. The quality and medical needs questions (which are currently collected on a voluntary basis) may need to be modified to encapsulate those data necessary for calculation of quality indicators in the future.

We awarded a contract to the Research Triangle Institute (RTI) with the primary tasks of identifying quality indicators pertinent to the inpatient rehabilitation setting and determining what information is necessary to calculate those quality indicators. These tasks included reviewing literature and other sources for existing rehabilitation quality indicators. It also involved identifying organizations involved in measuring or monitoring quality of care in the inpatient rehabilitation setting. In addition, RTI was tasked with performing independent testing of the quality indicators identified in their research.

Once RTI has issued a final report, taking into account and responding to public comments in the **Federal Register** as part of the Paperwork Reduction Act process, we will publish our rationale for revising the IRF–PAI. Then in accordance with the Paperwork

Reduction Act, we will publish our proposed revisions to the IRF–PAI and solicit public comments. The revised IRF–PAI will need to be approved by OMB before it is used in IRFs.

We have supported the development of valid quality measures and have been engaged in a variety of quality improvement efforts focused in other post-acute care settings such as nursing homes. However, any new quality-related data collected from the IRF–PAI would have to be analyzed to determine the feasibility of developing a payment method that accounts for the performance of the IRF in providing the necessary rehabilitative care.

Medicare beneficiaries are the primary users of IRF services. Any quality measures must be carefully constructed to address the unique characteristics of this population. Similarly, we need to consider how to design effective incentives; that is, superior performance measured against pre-established benchmarks and/or performance improvements.

In addition, while our efforts to develop the various post-acute care PPSs, including the IRF PPS, have generated substantial improvements over the preexisting cost-based systems, each of these individual systems was developed independently. As a result, we have focused on phases of a patient's illness as defined by a specific site of service, rather than on the entire post-acute episode. As the differentiation among provider types (such as SNFs and IRFs) becomes less pronounced, we need to investigate a more coordinated approach to payment and delivery of post-acute services that focuses on the overall post-acute episode.

This could entail a strategy of developing payment policy that is as neutral as possible regarding provider and patient decisions about the use of particular post-acute services. That is, Medicare should provide payments sufficient to ensure that beneficiaries receive high quality care in the most appropriate setting, so that admissions and any transfers between settings occur only when consistent with good care, rather than to generate additional revenues. In order to accomplish this objective, we need to collect and compare clinical data across different sites of service.

In fact, in the long run, our ability to compare clinical data across care settings is one of the benefits that will be realized as a basic component of the Department's interest in the use of a standardized electronic health record (EHR) across all settings including IRFs. It is also important to recognize the complexity of the effort, not only in developing an integrated assessment tool that is designed using health information standards, but in examining the various provider-centric prospective payment methodologies and considering payment approaches that are based on patient characteristics and outcomes. MedPAC has recently taken a preliminary look at the challenges in improving the coordination of our post-acute care payment methods, and suggested that it may be appropriate to explore additional options for paying for post-acute services. We agree that CMS, in conjunction with MedPAC and other stakeholders, should consider a full range of options in analyzing our post-acute care payment methods, including the IRF PPS.

We also want to encourage incremental changes that will help us build towards these longer term objectives. For example, medical records tools are now available that could allow better coordinated discharge planning procedures. These tools can be used to ensure communication of a standardized data set that then can be used to establish a comprehensive IRF care plan. Improved communications may reduce the incidence of potentially avoidable re-hospitalizations and other negative impacts on quality of care that occur when patients are transferred to IRFs without a full explanation of their care needs. We are looking at ways that Medicare providers can use these tools to generate timely data across settings.

It is important to note that some of the ideas discussed above may exceed our current statutory authority. However, we believe that it is useful to encourage discussion of a broad range of ideas for debate of the relative advantages and disadvantages of the various policies affecting this important component of the health care sector. Thus, we solicited comments on these and other approaches.

Comment: Most commenters were supportive of the concept of providing incentives for high quality and improved patient outcomes within the structure of Medicare's payment systems. Commenters were also generally supportive of advancing approaches that resulted in more consistent payments for similar services across the various post acute care settings and a more seamless system of care, though several noted important distinctions between the type of care provided in IRF compared to other settings. For example, one commenter objected to the implication that the differentiation among provider types (such as SNFs and IRFs) could become less pronounced. This commenter stated that there is a big difference in care and rehabilitation between these two types of facilities and suggested that we ask patients about this difference. Many Commenters noted that, in advancing these policy goals, CMS should facilitate stakeholder input to ensure that the knowledge and experience of providers, beneficiaries, and others with critical knowledge is factored into the development process.

Response: CMS appreciates the thoughtful comments provided on these important issues. By advancing a more seamless system of payments and benefits in post acute care, Medicare can ensure that patients receive high quality care in the most appropriate setting, and that decisions about where patients receive care are guided by decisions of patients and their families working with physicians, rather than in response to financial incentives or barriers created by administrative guidelines. In addition, pay for performance has the potential to promote real improvements in quality and outcomes as demonstrated by the work CMS has advanced already; for example, the Premier Hospital Demonstration.

We agree with commenters that CMS should involve stakeholders and work collaboratively with providers, patients and practitioners in the field to advance these objectives. In developing additional IRF–PAI quality items and related quality measures through our research with RTI, as described in section VII above, RTI has already begun to do that by convening meetings of a Technical Expert Panel to consider the critical methodological and clinical issues. The research we are conducting through the RTI contract will provide data that will promote and advance efforts to develop and consider pay for performance approaches in IRFs, as well as approaches to measuring and rewarding quality improvement more broadly in post acute care. We also agree that, in developing a more integrated strategy for payment and care delivery within Medicare's post acute benefits, it will be important to consider not only how various provider types are similar but also how they are different.

VIII. Miscellaneous Public Comments Within the Scope of the Proposed Rule

Comment: We received a comment regarding a change made to § 412.25(a) when the inpatient psychiatric facility (IPF) PPS was published on November 15, 2004 (69 FR 66922). The commenter requested that we add the reference to a rehabilitation unit that was removed by the IPF PPS final rule.

Response: We agree with making the change requested by the commenter.

Section 412.1 specifies the scope of part 412. In order to expand the existing scope of part 412 the IPF PPS final rule revised § 412.1 by redesignating paragraphs (a)(2) and (a)(3) as paragraphs (a)(3) and (a)(4) and adding a new paragraph (a)(2). The added paragraph (a)(2) specified that in accordance with section 124 of Pub. L. 106–113 we were establishing a per diem prospective payment system for the inpatient operating and capital costs of hospital inpatient services furnished to Medicare beneficiaries by a psychiatric facility that meets the conditions of subpart N of part 412. Redesignated as paragraph (a)(3) is the paragraph that specifies the statutory basis for the establishment of the IRF PPS.

In order to conform § 412.25(a) to the revision we made as stipulated above to § 412.1 the IPF PPS final rule revised § 412.25(a), which specifies the basis for exclusion from being paid under the IPPS. Prior to publishing the IPF PPS final rule, § 412.25(a) read as follows:

(a) Basis for exclusion. In order to be excluded from the prospective payment systems specified in § 412.1(a)(1), a psychiatric or rehabilitation unit must meet the following requirements.

When the IPF PPS final rule revised § 412.25(a) the intended purpose of the revision was to include a reference to new paragraph (a)(2) that, as stipulated above, we had added to § 412.1. However, when we revised § 412.25(a), we inadvertently removed the words ''or rehabilitation'' from the existing § 412.25(a). Therefore, in order to correct the inadvertent removal of the words ''or rehabilitation'' from § 412.25(a), we are making a technical correction so that § 412.25(a) will read as follows:

(a) Basis for exclusion. In order to be excluded from the prospective payment systems as specified in § 412.1(a)(1) and be paid under the inpatient psychiatric facility prospective payment system as specified in § 412.1(a)(2) or the inpatient rehabilitation facility prospective payment system as specified in § 412.1(a)(3), a psychiatric or rehabilitation unit must meet the following requirements.

IX. Miscellaneous Public Comments Outside the Scope of the Proposed Rule

Comment: We received a number of comments expressing concerns about various aspects of CMS's enforcement of the 75 percent rule. Several commenters stated that enforcement of the 75 percent rule would lead many IRFs to close, would arbitrarily exclude patients in certain RICs from receiving treatment in IRFs, and would create access to care problems for patients.

Response: These comments are not specifically related to the proposed changes to the IRF PPS that were discussed in the FY 2006 proposed rule (70 FR 30188). We responded to similar comments in the May 7, 2004 final rule (69 FR 25752) that established the changes to the criteria for being classified as an IRF. Because the responses to these comments in the May 7, 2004 final rule are very lengthy, we refer the reader to that final rule for the detailed responses to these and other comments regarding the 75 percent rule.

Comment: One commenter asked that we provide the algorithm (that is, the computer software) that the fiscal intermediaries use in their presumptive determinations of IRF compliance with the 75 percent rule.

Response: We will take this into consideration, and may make the computer software available to all interested parties at a future date.

Comment: One commenter suggested that CMS consider implementing a cost-of-living adjustment for IRFs located in Alaska, to offset higher non-labor costs in Alaska.

Response: In the August 7, 2001 final rule (66 FR 41316, 41361), we referred to Section 1886(j)(4)(B), which authorizes, but does not require, the Secretary to take into account the unique circumstances of IRFs located in Alaska and Hawaii. In the data used to prepare the August 7, 2001 final rule, there was only one IRF in Hawaii and one in Alaska. In the August 7, 2001 final rule, we explained that, due to the small number of IRFs in Alaska and Hawaii in the data, analyses were inconclusive regarding whether a cost-of-living adjustment would improve payment equity for these facilities. Therefore, we did not implement an adjustment for facilities located in Alaska and Hawaii in the August 7, 2001 final rule.

In the FY 2003 data used for the FY 2006 proposed rule (70 FR 30188) and for this final rule, there were 3 IRFs in Alaska and 1 IRF in Hawaii. We continue to believe that this may be too small a number of facilities for us to determine, based on analysis of the data, whether a cost-of-living adjustment would improve payment equity for these facilities. However, we will consider conducting such an analysis in the future.

Comment: Some commenters suggested changes to the items on the IRF–PAI, such as deleting the transfer to tub item and revising the instructions for the items that describe preventable conditions that occur on admission to the IRF and preventable conditions that occur while the patient is in an IRF.

Response: We have contracted with the Research Triangle Institute (RTI) to analyze and recommend changes to the IRF–PAI that would improve our ability to assess quality of care in IRFs. Any changes to the IRF–PAI that CMS might decide to propose in the future, based on RTI's recommendations, would require clearance by the Office of Management and Budget. However, we will take the commenters suggestions into consideration.

Comment: Several commenters suggested that CMS allow general hospitals to increase physiatrist training if they also decrease training in one or more specialties reimbursed under the inpatient PPS.

Response: This comment does not relate to the IRF PPS and is outside the scope of this rule. We will forward it to the component of the Agency that works on the IPPS for their consideration.

IX. Provisions of the Final Regulations

The provisions of this final rule restate the provisions of the FY 2006 proposed rule (70 FR 30188), except as noted elsewhere in the preamble. Following is a highlight of the changes we made from the proposed rule:

- We are adding 2 codes that were not on the proposed list of ICD–9–CM codes to be removed from the comorbidity tiers (V46.11 and V46.12). We are adding these codes to the list to be removed because these codes are derived from code V46.1, which was determined by RAND to have no positive impact on payment when controlling for the CMG.
- We are adding the following codes to the list of comorbidities we proposed in the proposed rule: 250.1 (insulin dependent diabetes without mention of complications, not stated as controlled), code 428.1-Left Heart Failure, code 428.20-Systolic Heart Failure Unspecified, code 428.21-Systolic Heart Failure Acute, code 428.22-Systolic Heart Failure Chronic, code 428.23-Systolic Hear Failure Acute on Chronic, code 428.30-Diastolic Heart Failure Unspecified, code 428.31-Diastolic Heart Failure Acute, code 428.32-Diastolic Heart Failure Chronic, code 428.33-Diastolic Heart Failure Acute on Chronic, code 428.40-Combined Systolic and Diastolic Heart Failure Unspecified, code 428.41-Combined Systolic and Diastolic Heart Failure Acute, code 428.42-Combined Systolic and Diastolic Heart Failure Chronic, and code 428.43-Combined Systolic and Diastolic Heart Failure Acute on Chronic. For this final rule, we decided to add these codes to the list of

comorbidities we proposed in the proposed rule because of the increased costs associated with these codes. After receiving the comments to add additional codes to the list of comorbidity codes used to increase the CMG payment rate, our Medical Officers, similar to RAND's TEP, believe that several of the codes suggested should be added to these tiers that increase payment for the CMG.

- We are updating the market basket estimate, based on the FY 2002-based RPL market basket and the Global Insight's 2nd quarter 2005 forecast, to 3.6 percent (from 3.1 percent in the proposed rule).
- We are changing our proposed policy to adopt the CBSA-based wage index without a transition to implementing the CBSA-based wage index with a budget neutral one-year blended wage index. Thus, the FY 2006 wage index is comprised of 50 percent of the FY 2006 MSA-based wage index and 50 percent of the FY 2006 CBSA-based wage index (both based on FY 2001 hospital wage data) for all IRFs.
- We are changing our proposed policy to not adopt a hold harmless policy to adopting a budget neutral 3 year hold harmless policy for FY 2005 rural IRFs that will be classified as urban under the FY 2006 CBSA-based designations. The 3 year hold harmless policy will only apply to existing rural FY 2005 IRFs that will experience a decrease in payments due solely to the loss of the FY 2005 rural adjustment of 19.14 percent because of the adoption of the CBSA-based designations.
- We are changing the exponent for the teaching status adjustment formula to 0.9012 (from 1.083 in the proposed rule), based on RAND's most recent cost regressions using data from FY 2003, including the HealthSouth home office cost data from FY 2004 (as described in detail in section IV of this final rule).
- We are changing the rural adjustment to 21.3 percent (from 24.1 percent in the proposed rule), based on RAND's most recent cost regressions using data from FY 2003, including the HealthSouth home office cost data from FY 2004 (as described in detail in section IV of this final rule).
- We are changing the exponent for the LIP adjustment formula to 0.6229 (from 0.636 in the proposed rule), based on RAND's most recent cost regressions using data from FY 2003, including the HealthSouth home office cost data from FY 2004 (as described in detail in section IV of this final rule).
- We are changing the outlier threshold amount to $5,132 (from $4,911 in the proposed rule), based on RAND's most recent cost regressions using data from FY 2003, including the HealthSouth home office cost data from FY 2004 (as described in detail in section IV of this final rule).
- We are changing the base period for determining an IRF's FTE resident cap from the final settlement of the IRF's most recent cost reporting period ending on or before November 15, 2003, which was what we had proposed in the FY 2006 proposed rule, to the final settlement of the IRF's most recent cost reporting period ending on or before November 15, 2004.
- We are changing the budget neutrality factors applied to the standard payment amount in the methodology used to implement the changes in a budget neutral manner (section VI.B.8 of this final rule) to 0.9995 for the changes to the tier comorbidities and the CMGs, 0.9961 for the change to the rural adjustment, 0.9851 for the change to the LIP adjustment, and 0.9889 for the implementation of the new teaching status adjustment. These changes are necessary to ensure that the tier and CMG changes, the rural adjustment change, the LIP adjustment change, and the implementation of the new teaching status adjustment will be done in a budget neutral manner for FY 2006 (that is, such that estimated aggregate IRF payments for FY 2006 with the changes will equal estimated aggregate IRF payment in FY 2006 without the changes).
- We are changing the budget neutrality factor for the wage index changes for FY 2006 to 0.9995, to ensure that the wage index changes described in section VI.B.2 of this final rule will be made in a budget neutral manner.
- We are changing the standard payment conversion factor for FY 2006 to $12,767 (from $12,658 in the proposed rule), based on RAND's most recent cost regressions using data from FY 2003, including the HealthSouth home office cost data from FY 2004 (as described in detail in section IV of this final rule).

X. Collection of Information Requirements

This document does not impose information collection and recordkeeping requirements. Consequently, it need not be reviewed by the Office of Management and Budget under the authority of the Paperwork Reduction Act of 1995.

XI. Regulatory Impact Analysis

A. Introduction

The August 7, 2001 final rule established the IRF PPS for the payment of Medicare services for cost reporting periods beginning on or after January 1, 2002. We incorporated a number of elements into the IRF PPS, such as case-level adjustments, a wage adjustment, an adjustment for the percentage of low-income patients, a rural adjustment, and an outlier payment policy. This final rule updates the FY 2005 IRF PPS payment rates specified in the July 30, 2004 notice (69 FR 45721) and implements policy changes with regard to the IRF PPS based on analyses conducted by RAND under contract with us on CY 2002 and FY 2003 data (updated from the 1999 data used to design the IRF PPS).

In constructing these impacts, we do not attempt to predict behavioral responses, nor do we make adjustments for future changes in such variables as discharges or case-mix. We note that certain events may combine to limit the scope or accuracy of our impact analysis, because such an analysis is future-oriented and, thus, susceptible to forecasting errors due to other changes in the forecasted impact time period. Some examples of such possible events are newly legislated general Medicare program funding changes by the Congress, or changes specifically related to IRFs. In addition, changes to the Medicare program may continue to be made as a result of the BBA, the BBRA, the BIPA, or new statutory provisions. Although these changes may not be specific to the IRF PPS, the nature of the Medicare program is such that the changes may interact, and the complexity of the interaction of these changes could make it difficult to predict accurately the full scope of the impact upon IRFs.

We have examined the impacts of this final rule as required by Executive Order 12866 (September 1993, Regulatory Planning and Review) and the Regulatory Flexibility Act (RFA) and Impact on Small Hospitals (September 19, 1980, Pub. L. 96–354), section 1102(b) of the Social Security Act, the Unfunded Mandates Reform Act of 1995 (Pub. L. 104–4), and Executive Order 13132.

1. Executive Order 12866

Executive Order 12866 (as amended by Executive Order 13258, which merely reassigns responsibility of duties) directs agencies to assess all costs and benefits of available regulatory alternatives and, if regulation is necessary, to select regulatory approaches that maximize net benefits (including potential economic, environmental, public health and safety effects, distributive impacts, and equity). A regulatory impact analysis

(RIA) must be prepared for major rules with economically significant effects ($100 million or more in any 1 year).

We estimate that the cost to the Medicare program for IRF services in FY 2006 will increase by $210 million over FY 2005 levels. The updates to the IRF labor-related share and wage indices are made in a budget neutral manner. We are making changes to the CMGs and the tiers, the teaching status adjustment, and the rural and LIP adjustments in a budget neutral manner (that is, in order that total estimated aggregate payments with the changes equal total estimated aggregate payments without the changes). This means that we are improving the distribution of payments among facilities depending on the mix of patients they treat, their teaching status, their geographic location (rural vs. urban), and the percentage of low-income patients they treat, without changing total estimated aggregate payments. To redistribute payments among facilities, we lowered the base payment amount, which then gets adjusted upward for each facility according to the facility's characteristics. This redistribution will not, however, affect estimated aggregate payments to facilities. Thus, the changes to the IRF labor-related share and the wage indices, the changes to the CMGs, the tiers, and the motor score index, the teaching status adjustment, the update to the rural adjustment, and the update to the LIP adjustment have no overall effect on estimated costs to the Medicare program. Therefore, the estimated increased cost to the Medicare program is due to the combined effect of the updated IRF market basket of 3.6 percent, the 1.9 percent reduction to the standard payment conversion factor to account for changes in coding that affect total aggregate payments, and the update to the outlier threshold amount. We have determined that this final rule is a major rule as defined in 5 U.S.C. 804(2). Based on the overall percentage change in payments per case estimated using our payment simulation model (a 3.4 percent increase), we estimate that the total impact of these changes for estimated FY 2006 payments compared to estimated FY 2005 payments will be approximately a $210 million increase. This amount does not reflect changes in IRF admissions or case-mix intensity, which also may affect the overall estimated change in payments from FY 2005 to FY 2006.

2. Regulatory Flexibility Act (RFA)

The RFA requires agencies to analyze the economic impact of our regulations on small entities. If we determine that the regulation will impose a significant burden on a substantial number of small entities, we must examine options for reducing the burden. For purposes of the RFA, small entities include small businesses, nonprofit organizations, and government agencies. Most IRFs and most other providers and suppliers are considered small entities, either by nonprofit status or by having revenues of $6 million to $29 million in any 1 year. (For details, see the Small Business Administration's regulation that set forth size standards for health care industries at 65 FR 69432.) Because we lack data on individual hospital receipts, we cannot determine the number of small proprietary IRFs. Therefore, we assume that all IRFs (approximate total of 1,200 IRFs, of which approximately 60 percent are nonprofit facilities) are considered small entities for the purpose of the analysis that follows. Medicare fiscal intermediaries and carriers are not considered to be small entities. Individuals and States are not included in the definition of a small entity.

3. Impact on Rural Hospitals

Section 1102(b) of the Act requires us to prepare a regulatory impact analysis for any final rule that may have a significant impact on the operations of a substantial number of small rural hospitals. This analysis must conform to the provisions of section 603 of the RFA. With the exception of hospitals located in certain New England counties, for purposes of section 1102(b) of the Act, we previously defined a small rural hospital as a hospital with fewer than 100 beds that is located outside of a Metropolitan Statistical Area (MSA) or New England County Metropolitan Area (NECMA). However, under the new labor market definitions that we are adopting, we will no longer employ NECMAs to define urban areas in New England. Therefore, for purposes of this analysis, we now define a small rural hospital as a hospital with fewer than 100 beds that is located outside of a Metropolitan Statistical Area (MSA).

As discussed in detail below, the rates and policies set forth in this final rule will not have an adverse impact on rural hospitals based on the data of the 169 rural units and 21 rural hospitals in our database of 1,188 IRFs for which data were available.

4. Unfunded Mandates Reform Act

Section 202 of the Unfunded Mandates Reform Act of 1995 (Pub. L. 104–4) also requires that agencies assess anticipated costs and benefits before issuing any final rule that may result in expenditures in any 1 year by State, local, or tribal governments, in the aggregate, or by the private sector, of at least $110 million. This final rule will not mandate any requirements for State, local, or tribal governments, nor will it affect private sector costs.

5. Executive Order 13132

Executive Order 13132 establishes certain requirements that an agency must meet when it promulgates a final rule that imposes substantial direct requirement costs on State and local governments, preempts State law, or otherwise has Federalism implications. We have reviewed this final rule in light of Executive Order 13132 and have determined that it will not have any negative impact on the rights, roles, or responsibilities of State, local, or tribal governments.

6. Overall Impact

The following analysis, in conjunction with the remainder of this document, demonstrates that this final rule is consistent with the regulatory philosophy and principles identified in Executive Order 12866, the RFA, and section 1102(b) of the Act. We have determined that the final rule has a significant economic impact on a substantial number of small entities or a significant impact on the operations of a substantial number of small rural hospitals.

B. Anticipated Effects of the Final Rule

We discuss below the impacts of this final rule on the budget and on IRFs.

1. Basis and Methodology of Estimates

In this final rule, we are implementing policy changes and payment rate updates for the IRF PPS. Based on the overall percentage change in payments per discharge estimated using a payment simulation model developed by RAND under contract with CMS (a 3.4 percent increase), we estimate the total impact of these changes for estimated FY 2006 payments compared to estimated FY 2005 payments to be approximately a $210 million increase. This amount does not reflect changes in hospital admissions or case-mix intensity, which also may affect the overall change in payments from FY 2005 to FY 2006.

We have prepared separate impact analyses of each of the changes to the IRF PPS. RAND's payment simulation model relies on the most recent available data (FY 2003) to enable us to estimate the impacts on payments per discharge of certain changes we are implementing in this final rule.

The data used in developing the quantitative analyses of estimated changes in payments per discharge

presented below are taken from the FY 2003 MedPAR file and the most current Provider-Specific File that is used for payment purposes. Data from the most recently available IRF cost reports were used to estimate costs and to categorize hospitals. The data also include the FY 2004 home office costs for HealthSouth facilities, as described in section IV of the preamble to this final rule.

Our analysis has several qualifications. First, we do not make adjustments for behavioral changes that hospitals may adopt in response to the policy changes, and we do not adjust for future changes in such variables as admissions, lengths of stay, or case-mix. Second, due to the interdependent nature of the IRF PPS payment components, it is very difficult to precisely quantify the impact associated with each change.

Using cases in the FY 2003 MedPAR file, we simulated payments under the IRF PPS given various combinations of payment parameters.

The changes discussed separately below are the following:

- The effects of the annual market basket update (using the rehabilitation hospital, psychiatric hospital, and long-term care hospital (RPL) market basket) to IRF PPS payment rates required by sections 1886(j)(3)(A)(i) and 1886(j)(3)(C) of the Act.
- The effects of applying the budget-neutral labor-related share and wage index adjustment, as required under section 1886(j)(6) of the Act.
- The effects of the decrease to the standard payment amount to account for the increase in estimated aggregate payments due to changes in coding, as required under section 1886(j)(2)(C)(ii) of the Act.
- The effects of the budget-neutral changes to the tier comorbidities, CMGs, motor score index, and relative weights, under the authority of section 1886(j)(2)(C)(i) of the Act.
- The effects of the one year budget-neutral transition policy for adopting the new CBSA-based geographic area definitions announced by OMB in June 2003.
- The effects of the 3 year budget-neutral hold-harmless policy for IRFs that are rural under § 412.602 during FY 2005, but are urban under § 412.602 during FY 2006 and lose the rural adjustment resulting in a loss of estimated IRF PPS payments and meets the intent of the hold harmless policy.
- The effects of the implementation of a budget-neutral teaching status adjustment, as permitted under section 1886(j)(3)(A)(v) of the Act.
- The effects of the budget-neutral update to the percentage amount by which payments are adjusted for IRFs located in rural areas, as permitted under section 1886(j)(3)(A)(v) of the Act.
- The effects of the budget-neutral update to the formula used to calculate the payment adjustment for IRFs based on the percentage of low-income patients they treat, as permitted under section 1886(j)(3)(A)(v) of the Act.
- The effects of the change to the outlier loss threshold amount to maintain total estimated outlier payments at 3 percent of total estimated payments to IRFs in FY 2006, consistent with section 1886(j)(4) of the Act.
- The total change in estimated payments based on the FY 2006 policies relative to estimated payments based on FY 2005 policies.

To illustrate the impacts of the FY 2006 estimated changes, our analysis begins with a FY 2005 baseline simulation model using: IRF charges from FY 2003 inflated to FY 2005 using the market basket; the FY 2005 PRICER; the estimated percent of outlier payments in FY 2005; the FY 2005 CMG GROUPER (version 1.22); the MSA designations for IRFs based on OMB's MSA definitions prior to June 2003; the FY 2005 wage index; the FY 2005 labor-market share; the FY 2005 formula for the LIP adjustment; and the FY 2005 percentage amount of the rural adjustment.

Each policy change is then added incrementally to this baseline model, finally arriving at an FY 2006 model incorporating all of the changes to the IRF PPS. This allows us to isolate the effects of each change. Note that, in computing estimated payments per discharge for each of the policy changes, the outlier loss threshold has been adjusted so that estimated outlier payments are 3 percent of total estimated payments.

Our final comparison illustrates the percent change in estimated payments per discharge from FY 2005 to FY 2006. One factor that affects the changes in IRFs' estimated payments from FY 2005 to FY 2006 is that we currently estimate total outlier payments during FY 2005 to be 1.2 percent of total estimated payments. As discussed in the August 7, 2001 final rule (66 FR at 41362), our policy is to set total estimated outlier payments at 3 percent of total estimated payments. Because estimated outlier payments during FY 2005 were below 3 percent of total payments, estimated outlier payments in FY 2006 are projected to increase by an additional 1.8 percent over estimated payments in FY 2005 because of the change in the outlier loss threshold to achieve the 3 percent target.

2. Analysis of Table 13

Table 13 displays the results of our analysis. The table categorizes IRFs by geographic location, including urban or rural location and location with respect to CMS' nine regions of the country. In addition, the table divides IRFs into those that are separate rehabilitation hospitals (otherwise called freestanding hospitals in this section), those that are rehabilitation units of a hospital (otherwise called hospital units in this section), rural or urban facilities by ownership (otherwise called for-profit, non-profit, and government), and by teaching status. The top row of the table shows the overall impact on the 1,188 IRFs included in the analysis.

The next twelve rows of Table 13 contain IRFs categorized according to their geographic location, designation as either a freestanding hospital or a unit of a hospital, and by type of ownership: All urban, which is further divided into urban units of a hospital, urban freestanding hospitals, by type of ownership, and rural, which is further divided into rural units of a hospital, rural freestanding hospitals, and by type of ownership. There are 998 IRFs located in urban areas included in our analysis. Among these, there are 802 IRF units of hospitals located in urban areas and 196 freestanding IRF hospitals located in urban areas. There are 190 IRFs located in rural areas included in our analysis. Among these, there are 169 IRF units of hospitals located in rural areas and 21 freestanding IRF hospitals located in rural areas. There are 354 for-profit IRFs. Among these, there are 295 IRFs in urban areas and 59 IRFs in rural areas. There are 708 non-profit IRFs. Among these, there are 603 urban IRFs and 105 rural IRFs. There are 126 government-owned IRFs. Among these, there are 100 urban IRFs and 26 rural IRFs.

The following three parts of Table 13 show IRFs grouped by their geographic location within a region, and the last part groups IRFs by teaching status. First, IRFs located in urban areas are categorized with respect to their location within a particular one of nine geographic regions. Second, IRFs located in rural areas are categorized with respect to their location within a particular one of the nine CMS regions. In some cases, especially for rural IRFs located in the New England, Mountain, and Pacific regions, the number of IRFs represented is small. Finally, IRFs are grouped by teaching status, including non-teaching IRFs, IRFs with an intern and resident to ADC ratio less than 10 percent, IRFs with an intern and resident to ADC ratio greater than or

equal to 10 percent and less than or equal to 19 percent, and IRFs with an intern and resident to ADC ratio greater than 19 percent.

TABLE 13.—PROJECTED IMPACT OF FY 2006 REFINEMENTS TO THE IRF PPS

Facility classification (1)	Number of IRFs (2)	Number of cases (3)	FY06 Wage Index and Labor-share (4)	Outlier (5)	Market Basket (6)	New CMG, new tiers, and motor score (7)	Rural adjust. (8)	New LIP adjust. (9)	Teach. Status adjust. (10)	1.9% reduct. (11)	Total change % (12)
Total	1,188	461,738	0.0%	1.8%	3.6%	0.0%	0.0%	0.0%	0.0%	−1.9%	3.4
Urban unit	802	261,229	0.1	2.3	3.6	0.9	−0.2	0.1	0.5	−1.9	5.3
Rural unit	169	34,664	−1.3	3.1	3.6	1.7	1.3	−0.1	−0.9	−1.9	5.5
Urban hospital	196	158,968	0.2	0.5	3.6	−1.7	0.0	−0.1	−0.5	−1.9	0.0
Rural hospital	21	6,877	−1.6	7.0	3.6	−0.7	1.3	0.0	−1.0	−1.9	6.5
Urban For-Profit	295	154,526	0.4	0.7	3.6	−1.8	0.0	0.0	−0.8	−1.9	0.0
Rural For-Profit	59	11,952	−1.9	3.8	3.6	0.2	1.3	0.2	−1.0	−1.9	4.2
Urban Non-Profit	603	237,384	0.0	2.1	3.6	1.0	−0.2	0.0	0.5	−1.9	5.0
Rural Non-Profit	105	23,793	−1.0	4.1	3.6	1.7	1.3	−0.3	−0.8	−1.9	6.7
Urban Government	100	28,287	−0.2	2.5	3.6	0.5	0.0	0.5	1.7	−1.9	6.7
Rural Government	26	5,796	−1.5	2.6	3.6	1.4	1.3	0.3	−1.0	−1.9	4.8
Urban	998	420,197	0.1	1.6	3.6	−0.1	−0.1	0.0	0.1	−1.9	3.2
Rural	190	41,541	−1.4	3.8	3.6	1.2	1.3	−0.1	−0.9	−1.9	5.7
Urban by region:											
New England	35	20,612	−0.3	1.7	3.6	−0.7	−0.3	−0.3	−0.6	−1.9	1.1
Middle Atlantic	156	76,962	−0.4	2.0	3.6	1.1	−0.2	0.0	1.6	−1.9	5.8
South Atlantic	124	73,677	0.4	0.6	3.6	−0.5	0.1	0.0	−0.3	−1.9	1.9
East North Central	189	69,315	0.1	2.3	3.6	1.2	−0.2	−0.2	0.1	−1.9	4.9
East South Central	54	30,473	0.2	0.0	3.6	−1.4	0.4	0.1	−0.5	−1.9	0.6
West North Central	71	22,217	−0.1	2.1	3.6	0.6	−0.2	−0.1	0.1	−1.9	4.2
West South Central	184	76,088	0.5	1.8	3.6	−0.7	−0.3	−0.1	−0.5	−1.9	2.3
Mountain	69	24,287	−0.2	1.2	3.6	−2.2	−0.1	−0.1	−0.5	−1.9	−0.2
Pacific	116	26,566	0.8	2.2	3.6	−0.8	−0.3	1.1	0.0	−1.9	4.7
Rural by region:											
New England	4	924	0.4	2.1	3.6	1.7	1.2	−0.4	−0.9	−1.9	5.9
Middle Atlantic	19	5,377	−1.1	8.2	3.6	1.5	1.4	−0.4	−1.0	−1.9	10.3
South Atlantic	22	5,440	−1.0	2.5	3.6	1.2	1.3	0.1	−1.0	−1.9	4.8
East North Central	28	5,618	−1.0	3.0	3.6	1.9	1.2	−0.4	−0.9	−1.9	5.5
East South Central	20	5,362	−1.9	2.2	3.6	1.1	1.3	0.3	−0.7	−1.9	3.9
West North Central	30	5,351	−1.3	2.3	3.6	2.7	1.2	−0.2	−0.6	−1.9	5.8
West South Central	54	12,016	−1.7	4.3	3.6	0.3	1.3	0.1	−1.0	−1.9	4.9
Mountain	9	902	−3.2	9.4	3.6	2.6	1.2	−0.4	−0.9	−1.9	10.2
Pacific	4	551	0.9	2.8	3.6	−2.7	1.1	−0.8	−0.8	−1.9	2.0
Teaching status:											
Non-teaching	1,053	400,072	0.0	1.6	3.6	−0.1	0.0	−0.1	−0.9	−1.9	2.2
Resident to ADC less than 10%	71	39,888	0.3	2.5	3.6	0.3	−0.3	0.2	2.2	−1.9	7.0
Resident to ADC 10%–19%	42	17,793	−0.9	2.8	3.6	0.4	−0.3	1.1	9.1	−1.9	14.3
Resident to ADC greater than 19%	22	3,985	−0.1	4.1	3.6	0.0	−0.3	1.1	19.5	−1.9	27.4

3. Impact of the Market Basket Update to the IRF PPS Payment Rates (Using the RPL Market Basket) (Column 6)

In column 6 of Table 13, we present the estimated effects of the market basket update to the IRF PPS payment rates, as discussed in section VI.B.1 of this final rule. Section 1886(j)(3)(A)(i) of the Act requires us annually to update the per discharge prospective payment rate for IRFs by an increase factor specified by the Secretary and based on an appropriate percentage increase in a market basket of goods and services comprising services for which payment is made to IRFs, as specified in section 1886(j)(3)(C) of the Act.

As discussed in detail in section VI.B.1 of this final rule, we are using a new market basket that reflects the operating and capital cost structures of inpatient rehabilitation facilities, inpatient psychiatric facilities, and long-term care hospitals, referred to as the RPL market basket. The FY 2006 update for IRF PPS payments using the FY 2002-based RPL market basket and the Global Insight's 2nd quarter 2005 forecast will be 3.6 percent.

In the aggregate, and across all hospital groups, the update will result in a 3.6 percent increase in overall estimated payments to IRFs.

4. Impact of the 1.9 Percent Decrease in the Standard Payment Amount To Account for Coding Changes (Column 11)

In column 11 of Table 13, we present the estimated effects of the decrease in the standard payment amount to account for the increase in aggregate payments due to changes in coding that do not reflect real changes in case mix, as discussed in section VI.A of this final rule. Section 1886(j)(2)(C)(ii) of the Act requires us to adjust the per discharge PPS payment rate to eliminate the effect of coding or classification changes that do not reflect real changes in case mix if we determine that such changes result in a change in aggregate payments under the classification system.

In the aggregate, and across all hospital groups, the update will result in a 1.9 percent decrease in overall estimated payments to IRFs. Thus, we estimate that the 1.9 percent reduction in the standard payment amount will result in a cost savings to the Medicare program of approximately $120 million.

5. Impact of the Changes to the CMGs and Tiers and Recalibration of Relative Weights (Column 7)

In column 7 of Table 13, we present the estimated effects of the changes to the tier comorbidities, the CMGs, the motor score index, and the recalibration of the relative weights, as discussed in section V of this final rule. Section 1886(j)(2)(C)(i) of the Act requires us to

adjust from time to time the classifications and weighting factors as appropriate to reflect changes in treatment patterns, technology, case mix, number of payment units for which payment under the IRF PPS is made, and any other factors which may affect the relative use of resources.

As described in section V.A.3 of this final rule, we are updating the tier comorbidities to remove certain comorbid condition codes from the list of comorbid conditions used to increase payment that we believe no longer merit additional payments, moving dialysis patients to tier one to increase payments for these patients, and aligning payments with the comorbidity conditions according to their effects on the relative costliness of patients. We are also updating the CMGs and the relative weights for the CMGs so that they better reflect the relative costliness of different types of IRF patients. We are also replacing the previous, unweighted motor score index with a weighted motor score index that better estimates the relative costliness of IRF patients. Finally, we are changing the GROUPER software so that, in cases where the provider has coded a 0 for the transfer to toilet item on the IRF–PAI, the GROUPER will change this raw score of 0 to a 2 instead of a 1.

To assess the impact of these changes, we compared estimated aggregate payments using the FY 2005 CMG relative weights (GROUPER version 1.22) to estimated aggregate payments using the FY 2006 CMG relative weights (GROUPER version 1.30). We note that, under the authority in section 1886(j)(2)(C)(i) of the Act and consistent with our rationale as described in section VI.B.8 of this final rule, we have applied a budget neutrality factor to ensure that the overall estimated payment impact of the tier and CMG changes is budget neutral (that is, in order that total estimated aggregate payments for FY 2006 with the change are equal to total estimated aggregate payment for FY 2006 without the change). Because we found that the relative weights we will use for calculating the FY 2006 payment rates are slightly higher, on average, than the relative weights we used in FY 2005, and that the effect of this would have been to increase estimated aggregate payments in FY 2006, the budget neutrality factor for the CMG and tier changes lowers the standard payment amount somewhat. Because the lower standard payment amount is balanced by the higher average weights, the effect is no change in overall estimated payments to IRFs. However, the distribution of estimated payments among facilities is affected, with some facilities receiving higher estimated payments and some facilities receiving lower estimated payments as a result of the tier and CMG changes, as shown in column 7 of Table 13.

Although, in the aggregate, these changes will not change overall estimated payments to IRFs, as shown in the zero impact in the first row of column 7, there are distributional effects of these changes. On average, the impacts of these changes on any particular group of IRFs are very small, with urban IRFs experiencing a 0.1 percent decrease and rural IRFs experiencing a 1.2 percent increase in estimated aggregate payments. The largest impacts are a 2.7 percent increase among rural IRFs in the West North Central region and a 2.7 percent decrease among rural IRFs in the Pacific region.

6. Impact of the Adoption (With a Blended One-Year Transition) of the New CBSA Labor Market Areas and the Changes to the Labor Share (Column 4)

In accordance with the broad discretion under section 1886(j)(6) of the Act, we previously defined hospital labor market areas based on the definitions of Metropolitan Statistical Areas (MSAs), Primary MSAs (PMSAs), and New England County Metropolitan Areas (NECMAs) issued by OMB as discussed in section VI.B.2 of this final rule. On June 6, 2003, OMB announced new Core-Based Statistical Areas (CBSAs), comprised of MSAs and the new Micropolitan Statistical Areas based on Census 2000 data. We are adopting the new CBSA definitions with a one-year blended transition as described in section VI.B.2 of this final rule, consistent with the inpatient prospective payment system, including the 49 new Metropolitan areas designated under the new definitions. We are also adopting CBSA definitions in New England in place of NECMAs. We are not adopting the newly defined Micropolitan Statistical Areas for use in the payment system, as Micropolitan Statistical Areas will remain part of the statewide rural areas for purposes of the IRF PPS payments, consistent with payments under the inpatient prospective payment system.

The estimated effects of these changes to the new CBSA-based designations with a one year blended transition, combined with the new labor share, are isolated in column 4 of Table 13 by holding all other payment parameters constant in this simulation. That is, column 4 shows the percentage changes in estimated payments when going from a model using the FY 2005 MSA designations to a model using the FY 2006 CBSA designations blended with the FY 2006 MSA designations and using the new labor share. As described in section VI.B.2 of this final rule, we are implementing a blended wage index for FY 2006 equal to 50 percent of the FY 2006 CBSA wage index value and 50 percent of the FY 2006 MSA wage index value for all IRFs for one year. The estimated effects of this policy are shown in column 4 of table 13.

Table 14 below compares the shifts in wage index values for IRFs for FY 2006 relative to FY 2005. A small number of IRFs (0.9 percent) will experience an increase of between 5 and 10 percent and 0.6 percent of IRFs will experience an increase of more than 10 percent. A small number of IRFs (0.6 percent) will experience decreases in their wage index values of at least 5 percent, but less than 10 percent. Furthermore, IRFs that will experience decreases in their wage index values of greater than 10 percent will be 0.1 percent.

The following table shows the projected impact for IRFs.

TABLE 14.—IMPACT OF THE FY 2006 BLENDED TRANSITION WAGE INDEX

Percent change in area wage index	Percent of IRFs
Decrease Greater Than 10.0	0.1
Decrease Between 5.0 and 10.0	0.6
Decrease Between 2.0 and 5.0	2.7
Decrease Between 0 and 2.0	31.0
No Change	37.2
Increase Between 0 and 2.0	24.5
Increase Between 2.0 and 5.0	2.4
Increase Between 5.0 and 10.0	0.9
Increase Greater Than 10.0	0.6
Total [1]	100.0

[1] May not exactly equal 100 percent due to rounding.

In addition, our analysis file consisted of 34 rural IRFs that change designations from a rural facility (under the MSA-based designations) to an urban facility (under the CBSA-based designations) and would experience estimated payment reductions due to the loss of the 19.14 percent rural adjustment. Based on our analysis, these IRFs would experience a reduction in estimated payments of between approximately $207 to up to approximately $3,070 (average amount of approximately $1,472) without a hold harmless policy.

Based on our estimates, the hold harmless policy would mitigate the estimated payment reductions of those rural IRFs in our analysis file. Although, we found that 5 IRFs would experience estimated payment increases under the hold harmless policy of between

approximately $9 to approximately $380, these IRFs will not receive additional payments under the hold harmless policy. The remaining 29 rural IRFs under our hold harmless policy can expect estimated payment reductions of between approximately $32 to approximately $1,167 (average amount of approximately $426) in FY 2006 compared to our estimates above.

7. Impact of the Change to the Outlier Threshold Amount (Column 5)

We estimate total outlier payments in FY 2005 to be approximately 1.2 percent of total estimated payments, so we are updating the threshold from $11,211 in FY 2005 to $5,132 in FY 2006 in order to set total estimated outlier payments in FY 2006 equal to 3 percent of total estimated payments in FY 2006.

The impact of this change (as shown in column 5 of table 13) is to increase total estimated payments to IRFs by about 1.8 percent.

The effect on payments to rural IRFs will be to increase estimated payments by 3.8 percent, and the effect on payments to urban IRFs will be to increase estimated payments by 1.6 percent. The largest effect will be a 9.4 percent increase in estimated payments to rural IRFs in the Mountain region, and the smallest effect will be no change in estimated payments for urban IRFs located in the East South Central region.

8. Impact of the Budget-Neutral Teaching Status Adjustment (Column 10)

In column 10 of Table 13, we present the estimated effects of the budget-neutral implementation of a teaching status adjustment to the Federal prospective payment rate for IRFs that have teaching programs, as discussed in section VI.B.3 of this final rule. Section 1886(j)(3)(A)(v) of the Act requires the Secretary to adjust the Federal prospective payment rates for IRFs under the IRF PPS for such factors as the Secretary determines are necessary to properly reflect variations in necessary costs of treatment among rehabilitation facilities. Under the authority of section 1886(j)(3)(A)(v) of the Act, we are applying a budget neutrality factor to ensure that the overall estimated payment impact of the teaching status adjustment is budget neutral (that is, in order that total estimated aggregate payments for FY 2006 with the adjustment will equal total estimated aggregate payments for FY 2006 without the adjustment). Because IRFs with teaching programs will receive additional payments from the implementation of this new teaching status adjustment, the effect of the budget neutrality factor will be to reduce the standard payment amount, therefore reducing estimated payments to IRFs without teaching programs. By design, however, the estimated increases in payments to teaching facilities will balance the estimated decreases in payments to non-teaching facilities, and total estimated aggregate payments to all IRFs will remain unchanged. Therefore, the first row of column 10 of Table 13 contains our projection of a zero impact in the aggregate. However, the rest of column 10 gives the estimated distributional effects among different types of providers of this change. Some providers' estimated payments increase and some decrease with this change.

On average, the estimated impacts of this change on any particular group of IRFs are very small, with urban IRFs experiencing a 0.1 percent estimated increase and rural IRFs experiencing a 0.9 percent estimated decrease.

The largest decrease in estimated payments is a 1.0 percent decrease among freestanding rural IRFs, rural for-profit facilities, rural government-owned facilities, and rural facilities in the Middle Atlantic, South Atlantic, and West South Central regions.

Overall, non-teaching hospitals will experience a 0.9 percent estimated decrease. The largest impacts are a 19.5 percent estimated increase among teaching facilities with intern and resident to ADC ratios greater than 19 percent. Teaching facilities that have intern and resident to ADC ratios greater than or equal to 10 percent and less than or equal to 19 percent will experience an estimated increase of 9.1 percent. Teaching facilities with resident and intern to ADC ratios less than 10 percent will experience an estimated increase of 2.2 percent.

9. Impact of the Update to the Rural Adjustment (Column 8)

In column 8 of Table 13, we present the estimated effects of the budget-neutral update to the percentage adjustment to the Federal prospective payment rates for IRFs located in rural areas, as discussed in section VI.B.4 of this final rule. Section 1886(j)(3)(A)(v) of the Act requires the Secretary to adjust the Federal prospective payment rates for IRFs under the IRF PPS for such factors as the Secretary determines are necessary to properly reflect variations in necessary costs of treatment among rehabilitation facilities.

In accordance with section 1886(j)(3)(A)(v) of the Act, we are changing the rural adjustment percentage, based on FY 2003 data with an adjustment to account for the absence of HealthSouth home office costs in that year (see the discussion in section IV of the preamble to this final rule), from 19.14 percent to 21.3 percent.

Because we are making this update to the rural adjustment in a budget neutral manner under the broad authority conferred by section 1886(j)(3)(A)(v) of the Act, estimated payments to urban facilities will decrease in proportion to the total increase in estimated payments to rural facilities. To accomplish this estimated redistribution of resources between urban and rural facilities, we applied a budget neutrality factor to reduce the standard payment amount. Rural facilities will receive an increase to the standard payment amount, and urban facilities will not. Overall, estimated aggregate payments to IRFs will not change, as indicated by the zero impact we project in the first row of column 8. However, estimated payments will be redistributed among rural and urban IRFs, as indicated by the rest of the column. On average, because there are a relatively small number of rural facilities, the estimated impacts of this change on urban IRFs are relatively small, with all urban IRFs experiencing a 0.1 percent estimated decrease. The estimated impact on rural IRFs is somewhat larger, with rural IRFs experiencing a 1.3 percent estimated increase. The largest estimated impacts are a 1.4 percent estimated increase among rural IRFs in the Middle Atlantic region and a 0.3 percent estimated decrease among urban facilities in the New England, West South Central, and Pacific regions, and among all categories of teaching facilities.

10. Impact of the Update to the LIP Adjustment (Column 9)

In column 9 of Table 13, we present the estimated effects of the budget-neutral update to the adjustment to the Federal prospective payment rates for IRFs according to the percentage of low-income patients they treat, as discussed in section VI.B.5 of this final rule. Section 1886(j)(3)(A)(v) of the Act requires the Secretary to adjust the Federal prospective payment rates for IRFs under the IRF PPS for such factors as the Secretary determines are necessary to properly reflect variations in necessary costs of treatment among rehabilitation facilities.

In accordance with section 1886(j)(3)(A)(v) of the Act, we are changing the formula for the LIP adjustment, based on FY 2003 data with an adjustment to account for the absence of HealthSouth home office costs in that year (see the discussion in

section IV of the preamble to this final rule), to raise the amount of 1 plus the DSH patient percentage to the power of 0.6229 instead of the power of 0.4838. Therefore, the formula to calculate the low-income patient or LIP adjustment will be as follows:

(1 + DSH patient percentage) raised to the power of (.6229)

Where DSH patient percentage =

$$\frac{\text{Medicare SSI Days}}{\text{Total Medicare Days}} + \frac{\text{Medicaid, NonMedicare Days}}{\text{Total Days}}$$

Because we are making this update to the LIP adjustment in a budget neutral manner, estimated payments will be redistributed among providers, according to their low-income percentages, but total estimated aggregate payments to facilities will not change. To do this, we applied a budget neutrality factor that lowered the standard payment amount in proportion to the amount of estimated payment increase that is attributable to the increased LIP adjustment payments. This will result in no change to estimated aggregate payments, which is reflected in the projected zero impact shown in the first row of column 9 of Table 13. The remaining rows of the column show the estimated impacts on different categories of providers. On average, the estimated impacts of this change on any particular group of IRFs are small, with urban IRFs experiencing no change in estimated aggregate payments and rural IRFs experiencing a 0.1 percent decrease in estimated aggregate payments. The largest estimated impacts are a 1.1 percent estimated increase among IRFs with 10 percent or higher intern and resident to ADC ratios and a 0.8 percent estimated decrease among rural IRFs in the Pacific region.

11. All Changes (Column 12)

Column 12 of Table 13 compares our estimates of the payments per discharge, incorporating all changes reflected in this final rule for FY 2006, to our estimates of payments per discharge in FY 2005 (without these changes). This column includes all of the policy changes.

Column 12 reflects all estimated FY 2006 changes relative to FY 2005, shown in columns 4 though 11. The average estimated increase for all IRFs is approximately 3.4 percent. This estimated increase includes the effects of the 3.6 percent market basket update. It also reflects the 1.8 percentage point difference between the estimated outlier payments in FY 2005 (1.2 percent of total estimated payments) and the estimate of the percentage of outlier payments in FY 2006 (3 percent), as described in section VI.B.6 of this final rule. As a result, payments per discharge are estimated to be 1.8 percent lower in FY 2005 than they would have been had the 3 percent target outlier payment percentage been met, resulting in a 1.8 percent greater increase in total estimated FY 2006 payments than would otherwise have occurred.

It also includes the estimated impact of the one-time 1.9 percent reduction in the standard payment conversion factor to account for changes in coding that increased payments to IRFs. Because we are making the remainder of the changes outlined in this final rule in a budget-neutral manner, they do not affect total estimated IRF payments in the aggregate. However, as described in more detail in each section, they do affect the estimated distribution of payments among providers.

There might also be interactive effects among the various factors comprising the payment system that we are not able to isolate. For these reasons, the estimated values in column 12 may not equal the sum of the estimated changes described above.

12. Accounting Statement

As required by OMB Circular A–4 (available at *http://www.whitehouse.gov/omb/circulars/a004/a-4.pdf*), in Table 15 below, we have prepared an accounting statement showing the classification of the expenditures associated with the provisions of this final rule. This table provides our best estimate of the increase in Medicare payments under the IRF PPS as a result of the changes presented in this final rule based on the data for 1,188 IRFs in our database. All expenditures are classified as transfers to Medicare providers (that is, IRFs).

TABLE 15.—ACCOUNTING STATEMENT: CLASSIFICATION OF ESTIMATED EXPENDITURES, FROM FY 2005 TO FY 2006

[In millions]

Category	Transfers
Annualized Monetized Transfers	$210.
From Whom to Whom?	Federal Government to IRF Medicare Providers.

13. Alternatives Considered

Because we have determined that this final rule will have a significant economic impact on IRFs, we will discuss the alternative changes to the IRF PPS that we considered. We reviewed the options considered in the proposed rule and took into consideration comments received during the public comment period as discussed in the preamble of this final rule.

The other option we considered before deciding to update the CMGs with the fiscal year 2003 data was to maintain the same CMG structure but recalculate the relative weights for the current CMGs using the 2003 data. After carefully reviewing the results of RAND's regression analysis, which compared the predictive ability of the CMGs under 3 scenarios (not updating the CMGs or the relative weights, updating only the relative weights and not the CMGs, and updating both the relative weights and the CMGs), we believe (based on RAND's analysis and a careful review of the comments we received on the FY 2006 proposed rule (70 FR 30188)) that updating both the relative weights and the CMGs will allow the classification system to do a better job of reflecting changes in treatment patterns, technology, case mix, and other factors which may affect the relative use of resources. For these reasons, we believe these changes will

improve the accuracy of payments in the IRF PPS.

We considered alternative options before deciding to implement an objective weighted motor score methodology for classifying patients into CMGs. The first of these options was to keep the non-weighted motor score methodology used previously. However, we considered weighted motor score methodologies because RAND's regression analysis indicated that the weighted methodologies would substantially improve the predictive ability of the system. We had not previously proposed weighted motor score methodologies for the IRF PPS because most experts previously believed that the data were not complete and accurate enough before the IRF PPS (although they were the most complete and accurate data available at the time). However, the technical expert panel that reviewed RAND's analyses and advised RAND regarding the methodology generally indicated that the data are now sufficient to support a weight motor score.

RAND assessed different weighting methodologies for both the motor score index and the cognitive score index. They discovered that weighting the motor score index improved the predictive ability of the system, whereas weighting the cognitive score index did not. Furthermore, the cognitive score index has never had much of an effect (in some RICs, it has no effect) on the assignment of patients to CMGs because the motor score tends to be much stronger at predicting a patient's expected costs in an IRF than the cognitive score. For these reasons, we proposed a weighting methodology for the motor score index, but proposed to use the same cognitive score index used previously for the IRF classification system. We believe that it would be futile to expend resources on changing the cognitive score methodology at this time when it would not benefit the Medicare program.

We considered various weighted motor score methodologies, including one which would require computing 378 different weights (18 different weights for the motor and cognitive indices that could all differ across 21 RICs). Rather than introduce this level of complexity to the system, RAND decided to explore simpler weighting methodologies that would still increase the predictive power of the system.

We also considered defining some simple combinations of the items that make up the motor score index and assigning weights to the groups of items instead of to the individual items. For example, we considered summing the three transfer items together to form a group with a weight of two, since they contributed about twice as much in the cost regression as the self-care items. We also considered assigning the self-care items a weight of one and the bladder and bowel items as a group a weight close to zero, since they contributed little to predicting cost in the regression analysis. We tried a number of variations and combinations of this, but RAND's TEP generally rejected these weighting schemes. They believed that introducing elements of subjectivity into the development of the weighting scheme may invite controversy, and that it is better to use an objective algorithm to derive the appropriate weights. We agree that an objective weighting scheme is best because it is based on regression analysis of the amount that various components of the motor score index contribute to predicting patient costs, using the best available data we have. For this reason, we decided to adopt the weighting scheme that applies the average optimal weights.

We considered a reduction to the standard payment amount by an amount up to 5.8 percent because one of RAND's methodologies for determining the amount of real change in case mix and the amount of coding change that occurred between 1999 and 2002 suggested that coding change could possibly have been responsible for up to 5.8 percent of the observed increase in IRFs' case mix. Furthermore, a separate analysis by RAND found that if all IRFs had been paid based on 100 percent of the IRF PPS payment rates throughout all of 2002 (some IRFs were still transitioning to PPS payments during 2002), PPS payments during 2002 would have been 17 percent higher than IRFs' costs. This suggests that we could potentially have implemented a reduction greater than 1.9 and up to 5.8 percent.

We decided to implement a 1.9 percent reduction to the standard payment amount, the lowest possible amount of change attributable to coding change for the following reasons. First, the analyses described in this final rule are only the first of an ongoing series of studies to evaluate the existence and extent of payment increases due to coding changes. We will continue to review the need for any further reduction in the standard payment amount in subsequent years as part of our overall monitoring and evaluation of the IRF PPS. Second, we believe this approach, which is supported by RAND's analysis of the data, will adequately adjust for the increased payments to IRFs caused purely by coding changes, but will still provide the flexibility to account for the possibility that some of the observed changes in case mix may be attributed to other than coding changes. Furthermore, we chose the amount of the reduction in the standard payment amount in order to recognize that IRFs' current cost structures may be changing as they strive to comply with other recent Medicare policy changes, such as the criterion for IRF classification commonly known as the ''75 percent rule.'' We considered the public comments we received on this issue and believe that 1.9 percent is the appropriate reduction to the standard payment amount at this time.

We considered no transition to implement the CBSA-based geographic classifications. However, based on further analysis (and in response to comments), we considered various transition options. One option we considered was a 1-year budget neutral transition with a blended wage index (comprised of the FY 2006 MSA-based wage index and FY 2006 CBSA-based wage index) for IRFs that would experience a decrease in the wage index. We also considered floor and ceiling options as requested by commenters. However, the options did not reflect the policy goals to mitigate the overall impact of IRFs transitioning from the MSA-based wage index to the CBSA-based wage index while lessening the overall impact on the unadjusted base payment that would be equitable to all IRFs.

We also considered not adopting a hold harmless policy. However, based on additional review we determined that it was appropriate to implement a budget neutral 3 year hold harmless policy that would better reflect policy and maintain fiscal integrity of existing FY 2005 rural IRFs that will be redesignated as urban facilities under the CBSA-based designation.

We considered not proposing to add a teaching status adjustment to the IRF PPS because we had some concerns about proposing a teaching status adjustment for IRFs. The policy implications of implementing a teaching status adjustment on the basis of the results of RAND's recent analysis caused us to seek assurance that these results did not reflect an aberration based on only a single year's data and that the teaching status adjustment could be implemented in such a way that it would be equitable to all IRFs.

However, the regression analysis conducted by RAND for CY 2002 and FY 2003 showed a statistically significant difference in costs between IRFs with teaching programs and those without teaching programs. After

reviewing RAND's analysis and the comments we received on the teaching status adjustment we proposed in the FY 2006 proposed rule (70 FR 30188), which were generally favorable, we determined that a teaching status adjustment for IRFs is appropriate at this time. We will continue to analyze the need for this adjustment in future data.

We believe that the analysis conducted by RAND using calendar year 2002 and FY 2003 data (the best available data we have and the first available data since implementation of the IRF PPS) left us little option other than to update the rural and LIP adjustments and the outlier loss threshold amount. The regression analysis indicated that facility-level adjustments (the rural and the LIP adjustments) should be updated to better reflect the costs of care among different types of IRF facilities. Similarly the regression analysis indicated that the outlier threshold amount needed to be updated so that estimated outlier payments for FY 2006 would equal 3 percent of total estimated IRF payments for FY 2006.

14. Conclusion

Overall, estimated payments per discharge for IRFs in FY 2006 are projected to increase by 3.4 percent, as reflected in column 12 of Table 13. IRFs in urban areas will experience a 3.2 percent increase in estimated payments per discharge compared with FY 2005. IRFs in rural areas, meanwhile, will experience a 5.7 percent estimated increase. Rehabilitation units in urban areas will experience a 5.3 percent increase in estimated payments per discharge, while freestanding rehabilitation hospitals in urban areas will experience no change in estimated payments per discharge. Rehabilitation units in rural areas will experience a 5.5 percent increase in estimated payments per discharge, while freestanding rehabilitation hospitals in rural areas will experience a 6.5 percent increase in estimated payments per discharge.

Overall, the largest estimated payment increase will be 27.4 percent among teaching IRFs with an intern and resident to ADC ratio greater than 19 percent and 14.3 percent among teaching IRFs with an intern and resident to ADC ratio greater than or equal to 10 percent and less than or equal to 19 percent. This is largely due to the teaching status adjustment. Other than for teaching IRFs, the largest estimated payment increase will be 10.3 percent among rural IRFs located in the Middle Atlantic region. This is due largely to the change in the CBSA-based designation from urban to rural, whereby the number of cases in the rural Middle Atlantic Region that will receive the new rural adjustment of 21.3 percent is projected to increase. The only overall decrease in estimated payments will occur among urban IRFs located in the Mountain census region, a decrease in estimated payments of 0.2 percent. This is due largely to the change in the CBSA-based designation from rural to urban. For non-profit IRFs, we found that rural non-profit facilities will receive the largest estimated payment increase of 6.7 percent. Conversely, for-profit urban facilities are projected to experience no change in payments for FY 2006.

In accordance with the provisions of Executive Order 12866, this regulation was reviewed by the Office of Management and Budget.

List of Subjects in 42 CFR Part 412

Administrative practice and procedure, Health facilities, Medicare, Puerto Rico, Reporting and recordkeeping requirements.

■ For the reasons set forth in the preamble, CMS amends 42 CFR chapter IV part 412 as set forth below:

PART 412—PROSPECTIVE PAYMENT SYSTEMS FOR INPATIENT HOSPITAL SERVICES

■ 1. The authority citation for part 412 continues to read as follows:

Authority: Secs. 1102 and 1871 of the Social Security Act (42 U.S.C. 1302 and 1395hh).

■ 2. Section 412.25 is amended by revising paragraph (a), introductory text, to read as follows:

§ 412.25 Excluded hospital units: Common requirements.

(a) Basis for exclusion. In order to be excluded from the prospective payment systems as specified in § 412.1(a)(1) and be paid under the inpatient psychiatric facility prospective payment system as specified in § 412.1(a)(2) or the inpatient rehabilitation facility prospective payment system as specified in § 412.1(a)(3), a psychiatric or rehabilitation unit must meet the following requirements.

* * * * *

■ 3. Section 412.602 is amended by revising the definitions of ''Rural area'' and ''Urban area'' to read as follows:

§ 412.602 Definitions.

* * * * *

Rural area means: For cost-reporting periods beginning on or after January 1, 2002, with respect to discharges occurring during the period covered by such cost reports but before October 1, 2005, an area as defined in § 412.62(f)(1)(iii). For discharges occurring on or after October 1, 2005, rural area means an area as defined in § 412.64(b)(1)(ii)(C).

* * * * *

Urban area means: For cost-reporting periods beginning on or after January 1, 2002, with respect to discharges occurring during the period covered by such cost reports but before October 1, 2005, an area as defined in § 412.62(f)(1)(ii). For discharges occurring on or after October 1, 2005, urban area means an area as defined in § 412.64(b)(1)(ii)(A) and § 412.64(b)(1)(ii)(B).

§ 412.622 [Amended]

■ 4. Section 412.622 is amended by—

■ A. In paragraph (b)(1), removing the cross references ''§§ 413.85 and 413.86 of this chapter'' and adding in their place ''§ 413.75 and § 413.85 of this chapter''.

■ B. In paragraph (b)(2)(i), removing the cross reference to ''§ 413.80 of this chapter'' and adding in its place ''§ 413.89 of this chapter''.

■ 5. Section 412.624 is amended by—

■ A. In paragraph (d)(1), removing the cross reference to ''paragraph (e)(4)'' and adding in its place ''paragraph (e)(5)''.

■ B. Adding a new paragraph (d)(4).

■ C. Revising paragraphs (e)(4) and (e)(5).

■ D. Adding new paragraphs (e)(6) and (e)(7).

■ E. In paragraph (f)(2)(v), removing the cross references to ''paragraphs (e)(1), (e)(2), and (e)(3) of this section'' and adding in their place ''paragraphs (e)(2), (e)(3), (e)(4), and (e)(7) of this section''.

The revisions and additions read as follows:

§ 412.624 Methodology for calculating the Federal prospective payment rates.

* * * * *

(d) * * *

(4) *Payment adjustment for Federal fiscal year 2006 and applicable Federal fiscal years.* CMS adjusts the standard payment conversion factor based on any updates to the adjustments specified in paragraph (e)(2), (e)(3), (e)(4) and (e)(7), of this section, and to any revision specified in § 412.620(c) by a factor as specified by the Secretary.

(e) * * *

(4) *Adjustments for teaching hospitals.* For discharges on or after October 1, 2005, CMS adjusts the Federal prospective payment on a facility basis by a factor as specified by CMS for facilities that are teaching institutions or units of teaching institutions. This adjustment is made on

a claim basis as an interim payment and the final payment in full for the claim is made during the final settlement of the cost report.

(5) *Adjustment for high-cost outliers.* CMS provides for an additional payment to an inpatient rehabilitation facility if its estimated costs for a patient exceed a fixed dollar amount (adjusted for area wage levels and factors to account for treating low-income patients, for rural location, and for teaching programs) as specified by CMS. The additional payment equals 80 percent of the difference between the estimated cost of the patient and the sum of the adjusted Federal prospective payment computed under this section and the adjusted fixed dollar amount. Effective for discharges occurring on or after October 1, 2003, additional payments made under this section will be subject to the adjustments at § 412.84(i), except that national averages will be used instead of statewide averages. Effective for discharges occurring on or after October 1, 2003, additional payments made under this section will also be subject to adjustments at § 412.84(m).

(6) *Adjustments related to the patient assessment instrument.* An adjustment to a facility's Federal prospective payment amount for a given discharge will be made, as specified under § 412.614(d), if the transmission of data from a patient assessment instrument is late.

(7) Adjustments for certain facilities geographically redesignated in FY 2006.

(i) *General.* For a facility defined as an urban facility under § 412.602 in FY 2006 that was previously defined as a rural facility in FY 2005 as the term rural was defined in FY 2005 under § 412.602 and whose payment, after applying the adjustment under this paragraph, will be lower only because of being defined as an urban facility in FY 2006 and it no longer qualified for the rural adjustment under § 412.624(e)(3) in FY 2006, CMS will adjust the facility's payment using the following method:

(A) For discharges occurring on or after October 1, 2005, and on or before September 30, 2006, the facility's payment will be increased by an adjustment of two thirds of its prior FY 2005 19.14 percent rural adjustment.

(B) For discharges occurring on or after October 1, 2006, and on or before September 30, 2007, the facility's payment will be increased by an adjustment of one third of its FY 2005 19.14 percent rural adjustment.

(ii) *Exception.* For discharges occurring on or after October 1, 2005 and on or before September 30, 2007, facilities whose payments, after applying the adjustment under this paragraph (e)(7)(i) of this section, will be higher because of being defined as an urban facility in FY 2006 and no longer being qualified for the rural adjustment under § 412.624(e)(3) in FY 2006, CMS will adjust the facility's payment by a portion of the applicable additional adjustment described in paragraph (e)(7)(i)(A) and (e)(7)(i)(B) of this section as determined by us.

* * * * *

(Catalog of Federal Domestic Assistance Program No. 93.773, Medicare—Hospital Insurance; and Program No. 93.774, Medicare—Supplementary Medical Insurance Program)

Dated: July 26, 2005.

Mark B. McClellan,

Administrator, Centers for Medicare & Medicaid Services.

Approved: July 27, 2005.

Michael O. Leavitt,

Secretary.

The following addendum will not appear in the Code of Federal Regulations.

TABLE 1.—FY 2006 IRF PPS TRANSITION WAGE INDEX TABLE

[For discharges occurring on or after October 1, 2005 and on or before September 30, 2006]

SSA state/ county code	County name	MSA No.	MSA urban/ rural	2006 MSA-based WI	2006 CBSA-based WI	CBSA No.	CBSA urban/ rural	Transition wage index *
01000	Autauga County, Alabama	5240	Urban	0.8300	0.8300	33860	Urban	0.8300
01010	Baldwin County, Alabama	5160	Urban	0.7932	0.7628	99901	Rural	0.7780
01020	Barbour County, Alabama	01	Rural	0.7637	0.7628	99901	Rural	0.7633
01030	Bibb County, Alabama	01	Rural	0.7637	0.9157	13820	Urban	0.8397
01040	Blount County, Alabama	1000	Urban	0.9198	0.9157	13820	Urban	0.9178
01050	Bullock County, Alabama	01	Rural	0.7637	0.7628	99901	Rural	0.7633
01060	Butler County, Alabama	01	Rural	0.7637	0.7628	99901	Rural	0.7633
01070	Calhoun County, Alabama	0450	Urban	0.7881	0.7881	11500	Urban	0.7881
01080	Chambers County, Alabama	01	Rural	0.7637	0.7628	99901	Rural	0.7633
01090	Cherokee County, Alabama	01	Rural	0.7637	.7628	99901	Rural	0.7633
01100	Chilton County, Alabama	01	Rural	0.7637	0.9157	13820	Urban	0.8397
01110	Choctaw County, Alabama	01	Rural	0.7637	0.7628	99901	Rural	0.7633
01120	Clarke County, Alabama	01	Rural	0.7637	0.7628	99901	Rural	0.7633
01130	Clay County, Alabama	01	Rural	0.7637	0.7628	99901	Rural	0.7633
01140	Cleburne County, Alabama	01	Rural	0.7637	0.7628	99901	Rural	0.7633
01150	Coffee County, Alabama	01	Rural	0.7637	0.7628	99901	Rural	0.7633
01160	Colbert County, Alabama	2650	Urban	0.7883	0.7883	22520	Urban	0.7883
01170	Conecuh County, Alabama	01	Rural	0.7637	0.7628	99901	Rural	0.7633
01180	Coosa County, Alabama	01	Rural	0.7637	0.7628	99901	Rural	0.7633
01190	Covington County, Alabama	01	Rural	0.7637	0.7628	99901	Rural	0.7633
01200	Crenshaw County, Alabama	01	Rural	0.7637	0.7628	99901	Rural	0.7633
01210	Cullman County, Alabama	01	Rural	0.7637	0.7628	99901	Rural	0.7633
01220	Dale County, Alabama	2180	Urban	0.7596	0.7628	99901	Rural	0.7612
01230	Dallas County, Alabama	01	Rural	0.7637	0.7628	99901	Rural	0.7633
01240	De Kalb County, Alabama	01	Rural	0.7637	0.7628	99901	Rural	0.7633
01250	Elmore County, Alabama	5240	Urban	0.8300	0.8300	33860	Urban	0.8300
01260	Escambia County, Alabama	01	Rural	0.7637	0.7628	99901	Rural	0.7633
01270	Etowah County, Alabama	2880	Urban	0.8049	0.8049	23460	Urban	0.8049
01280	Fayette County, Alabama	01	Rural	0.7637	0.7628	99901	Rural	0.7633
01290	Franklin County, Alabama	01	Rural	0.7637	0.7628	99901	Rural	0.7633
01300	Geneva County, Alabama	01	Rural	0.7637	0.7537	20020	Urban	0.7587
01310	Greene County, Alabama	01	Rural	0.7637	0.8336	46220	Urban	0.7987
01320	Hale County, Alabama	01	Rural	0.7637	0.8336	46220	Urban	0.7987
01330	Henry County, Alabama	01	Rural	0.7637	0.7537	20020	Urban	0.7587
01340	Houston County, Alabama	2180	Urban	0.7596	0.7537	20020	Urban	0.7567
01350	Jackson County, Alabama	01	Rural	0.7637	0.7628	99901	Rural	0.7633
01360	Jefferson County, Alabama	1000	Urban	0.9198	0.9157	13820	Urban	0.9178
01370	Lamar County, Alabama	01	Rural	0.7637	0.7628	99901	Rural	0.7633
01380	Lauderdale County, Alabama	2650	Urban	0.7883	0.7883	22520	Urban	0.7883
01390	Lawrence County, Alabama	21030	Urban	0.8894	0.8894	19460	Urban	0.8894
01400	Lee County, Alabama	0580	Urban	0.8215	0.8215	12220	Urban	0.8215
01410	Limestone County, Alabama	3440	Urban	0.8851	0.8851	26620	Urban	0.8851
01420	Lowndes County, Alabama	01	Rural	0.7637	0.8300	33860	Urban	0.7969
01430	Macon County, Alabama	01	Rural	0.7637	0.7628	99901	Rural	0.7633
01440	Madison County, Alabama	3440	Urban	0.8851	0.8851	26620	Urban	0.8851
01450	Marengo County, Alabama	01	Rural	0.7637	0.7628	99901	Rural	0.7633
01460	Marion County, Alabama	01	Rural	0.7637	0.7628	99901	Rural	0.7633
01470	Marshall County, Alabama	01	Rural	0.7637	0.7628	99901	Rural	0.7633
01480	Mobile County, Alabama	5160	Urban	0.7932	0.7995	33660	Urban	0.7964
01490	Monroe County, Alabama	01	Rural	0.7637	0.7628	99901	Rural	0.7633
01500	Montgomery County, Alabama	5240	Urban	0.8300	0.8300	33860	Urban	0.8300
01510	Morgan County, Alabama	2030	Urban	0.8894	0.8894	19460	Urban	0.8894
01520	Perry County, Alabama	01	Rural	0.7637	0.7628	99901	Rural	0.7633
01530	Pickens County, Alabama	01	Rural	0.7637	0.7628	99901	Rural	0.7633
01540	Pike County, Alabama	01	Rural	0.7637	0.7628	99901	Rural	0.7633
01550	Randolph County, Alabama	01	Rural	0.7637	0.7628	99901	Rural	0.7633
01560	Russell County, Alabama	1800	Urban	0.8690	0.8690	17980	Urban	0.8690
01570	St Clair County, Alabama	1000	Urban	0.9198	0.9157	13820	Urban	0.9178
01580	Shelby County, Alabama	1000	Urban	0.9198	0.9157	13820	Urban	0.9178
01590	Sumter County, Alabama	01	Rural	0.7637	0.7628	99901	Rural	0.7633
01600	Talladega County, Alabama	01	Rural	0.7637	0.7628	99901	Rural	0.7633
01610	Tallapoosa County, Alabama	01	Rural	0.7637	0.7628	99901	Rural	0.7633
01620	Tuscaloosa County, Alabama	8600	Urban	0.8440	0.8336	46220	Urban	0.8388
01630	Walker County, Alabama	01	Rural	0.7637	0.9157	13820	Urban	0.8397
01640	Washington County, Alabama	01	Rural	0.7637	0.7628	99901	Rural	0.7633
01650	Wilcox County, Alabama	01	Rural	0.7637	0.7628	99901	Rural	0.7633
01660	Winston County, Alabama	01	Rural	0.7637	0.7628	99901	Rural	0.7633
02013	Aleutians County East, Alaska	02	Rural	1.1637	1.1746	99902	Rural	1.1692

TABLE 1.—FY 2006 IRF PPS TRANSITION WAGE INDEX TABLE—Continued

[For discharges occurring on or after October 1, 2005 and on or before September 30, 2006]

SSA state/ county code	County name	MSA No.	MSA urban/ rural	2006 MSA-based WI	2006 CBSA-based WI	CBSA No.	CBSA urban/ rural	Transition wage index *
02016	Aleutians County West, Alaska	02	Rural	1.1637	1.1746	99902	Rural	1.1692
02020	Anchorage County, Alaska	0380	Urban	1.2109	1.2165	11260	Urban	1.2137
02030	Angoon County, Alaska	02	Rural	1.1637	1.1746	99902	Rural	1.1692
02040	Barrow-North Slope County, Alaska	02	Rural	1.1637	1.1746	99902	Rural	1.1692
02050	Bethel County, Alaska	02	Rural	1.1637	1.1746	99902	Rural	1.1692
02060	Bristol Bay Borough County, Alaska	02	Rural	1.1637	1.1746	99902	Rural	1.1692
02068	Denali County, Alaska	02	Rural	1.1637	1.1746	99902	Rural	1.1692
02070	Bristol Bay County, Alaska	02	Rural	1.1637	1.1746	99902	Rural	1.1692
02080	Cordova-Mc Carthy County, Alaska	02	Rural	1.1637	1.1746	99902	Rural	1.1692
02090	Fairbanks County, Alaska	02	Rural	1.1637	1.1146	21820	Urban	1.1392
02100	Haines County, Alaska	02	Rural	1.1637	1.1746	99902	Rural	1.1692
02110	Juneau County, Alaska	02	Rural	1.1637	1.1746	99902	Rural	1.1692
02120	Kenai-Cook Inlet County, Alaska	02	Rural	1.1637	1.1746	99902	Rural	1.1692
02122	Kenai Peninsula Borough, Alaska	02	Rural	1.1637	1.1746	99902	Rural	1.1692
02130	Ketchikan County, Alaska	02	Rural	1.1637	1.1746	99902	Rural	1.1692
02140	Kobuk County, Alaska	02	Rural	1.1637	1.1746	99902	Rural	1.1692
02150	Kodiak County, Alaska	02	Rural	1.1637	1.1746	99902	Rural	1.1692
02160	Kuskokwin County, Alaska	02	Rural	1.1637	1.1746	99902	Rural	1.1692
02164	Lake and Peninsula Borough, Alaska	02	Rural	1.1637	1.1746	99902	Rural	1.1692
02170	Matanuska County, Alaska	02	Rural	1.1637	1.2165	11260	Urban	1.1901
02180	Nome County, Alaska	02	Rural	1.1637	1.1746	99902	Rural	1.1692
02185	North Slope Borough, Alaska	02	Rural	1.1637	1.1746	99902	Rural	1.1692
02188	Northwest Arctic Borough, Alaska	02	Rural	1.1637	1.1746	99902	Rural	1.1692
02190	Outer Ketchikan County, Alaska	02	Rural	1.1637	1.1746	99902	Rural	1.1692
02200	Prince Of Wales County, Alaska	02	Rural	1.1637	1.1746	99902	Rural	1.1692
02201	Prince of Wales-Outer Ketchikan Census Area, Alaska	02	Rural	1.1637	1.1746	99902	Rural	1.1692
02210	Seward County, Alaska	02	Rural	1.1637	1.1746	99902	Rural	1.1692
02220	Sitka County, Alaska	02	Rural	1.1637	1.1746	99902	Rural	1.1692
02230	Skagway-Yakutat County, Alaska	02	Rural	1.1637	1.1746	99902	Rural	1.1692
02231	Skagway-Yakutat-Angoon Census Area, Alaska	02	Rural	1.1637	1.1746	99902	Rural	1.1692
02232	Skagway-Hoonah-Angoon Census Area, Alaska	02	Rural	1.1637	1.1746	99902	Rural	1.1692
02240	Southeast Fairbanks County, Alaska	02	Rural	1.1637	1.1746	99902	Rural	1.1692
02250	Upper Yukon County, Alaska	02	Rural	1.1637	1.1746	99902	Rural	1.1692
02260	Valdz-Chitna-Whitier County, Alaska	02	Rural	1.1637	1.1746	99902	Rural	1.1692
02261	Valdex-Cordove Census Area, Alaska	02	Rural	1.1637	1.1746	99902	Rural	1.1692
02270	Wade Hampton County, Alaska	02	Rural	1.1637	1.1746	99902	Rural	1.1692
02280	Wrangell-Petersburg County, Alaska	02	Rural	1.1637	1.1746	99902	Rural	1.1692
02282	Yakutat Borough, Alaska	02	Rural	1.1637	1.1746	99902	Rural	1.1692
02290	Yukon-Koyukuk County, Alaska	02	Rural	1.1637	1.1746	99902	Rural	1.1692
03000	Apache County, Arizona	03	Rural	0.9140	0.8936	99903	Rural	0.9038
03010	Cochise County, Arizona	03	Rural	0.9140	0.8936	99903	Rural	0.9038
03020	Coconino County, Arizona	2620	Urban	1.0611	1.0787	22380	Urban	1.0699
03030	Gila County, Arizona	03	Rural	0.9140	0.8936	99903	Rural	0.9038
03040	Graham County, Arizona	03	Rural	0.9140	0.8936	99903	Rural	0.9038
03050	Greenlee County, Arizona	03	Rural	0.9140	0.8936	99903	Rural	0.9038
03055	La Paz County, Arizona	03	Rural	0.9140	0.8936	99903	Rural	0.9038
03060	Maricopa County, Arizona	6200	Urban	0.9982	0.9982	38060	Urban	0.9982
03070	Mohave County, Arizona	4120	Urban	1.1121	0.8936	99903	Rural	1.0029
03080	Navajo County, Arizona	03	Rural	0.9140	0.8936	99903	Rural	0.9038
03090	Pima County, Arizona	8520	Urban	0.8926	0.8926	46060	Urban	0.8926
03100	Pinal County, Arizona	6200	Urban	0.9982	0.9982	38060	Urban	0.9982
03110	Santa Cruz County, Arizona	03	Rural	0.9140	0.8936	99903	Rural	0.9038
03120	Yavapai County, Arizona	03	Rural	0.9140	0.9892	39140	Urban	0.9516
03130	Yuma County, Arizona	9360	Urban	0.8871	0.8871	49740	Urban	0.8871
04000	Arkansas County, Arkansas	04	Rural	0.7703	0.7406	99904	Rural	0.7555
04010	Ashley County, Arkansas	04	Rural	0.7703	0.7406	99904	Rural	0.7555
04020	Baxter County, Arkansas	04	Rural	0.7703	0.7406	99904	Rural	0.7555
04030	Benton County, Arkansas	2580	Urban	0.8636	0.8636	22220	Urban	0.8636
04040	Boone County, Arkansas	04	Rural	0.7703	0.7406	99904	Rural	0.7555
04050	Bradley County, Arkansas	04	Rural	0.7703	0.7406	99904	Rural	0.7555
04060	Calhoun County, Arkansas	04	Rural	0.7703	0.7406	99904	Rural	0.7555
04070	Carroll County, Arkansas	04	Rural	0.7703	0.7406	99904	Rural	0.7555
04080	Chicot County, Arkansas	04	Rural	0.7703	0.7406	99904	Rural	0.7555
04090	Clark County, Arkansas	04	Rural	0.7703	0.7406	99904	Rural	0.7555
04100	Clay County, Arkansas	04	Rural	0.7703	0.7406	99904	Rural	0.7555
04110	Cleburne County, Arkansas	04	Rural	0.7703	0.7406	99904	Rural	0.7555
04120	Cleveland County, Arkansas	04	Rural	0.7703	0.8673	38220	Urban	0.8188
04130	Columbia County, Arkansas	04	Rural	0.7703	0.7406	99904	Rural	0.7555

TABLE 1.—FY 2006 IRF PPS TRANSITION WAGE INDEX TABLE—Continued

[For discharges occurring on or after October 1, 2005 and on or before September 30, 2006]

SSA state/ county code	County name	MSA No.	MSA urban/ rural	2006 MSA-based WI	2006 CBSA-based WI	CBSA No.	CBSA urban/ rural	Transition wage index *
04140	Conway County, Arkansas	04	Rural	0.7703	0.7406	99904	Rural	0.7555
04150	Craighead County, Arkansas	3700	Urban	0.8144	0.8144	27860	Urban	0.8144
04160	Crawford County, Arkansas	2720	Urban	0.8303	0.8283	22900	Urban	0.8293
04170	Crittenden County, Arkansas	4920	Urban	0.9234	0.9217	32820	Urban	0.9226
04180	Cross County, Arkansas	04	Rural	0.7703	0.7406	99904	Rural	0.7555
04190	Dallas County, Arkansas	04	Rural	0.7703	0.7406	99904	Rural	0.7555
04200	Desha County, Arkansas	04	Rural	0.7703	0.7406	99904	Rural	0.7555
04210	Drew County, Arkansas	04	Rural	0.7703	0.7406	99904	Rural	0.7555
04220	Faulkner County, Arkansas	4400	Urban	0.8826	0.8826	30780	Urban	0.8826
04230	Franklin County, Arkansas	04	Rural	0.7703	0.8283	22900	Urban	0.7993
04240	Fulton County, Arkansas	04	Rural	0.7703	0.7406	99904	Rural	0.7555
04250	Garland County, Arkansas	04	Rural	0.7703	0.9249	26300	Urban	0.8476
04260	Grant County, Arkansas	04	Rural	0.7703	0.8826	30780	Urban	0.8265
04270	Greene County, Arkansas	04	Rural	0.7703	0.7406	99904	Rural	0.7555
04280	Hempstead County, Arkansas	04	Rural	0.7703	0.7406	99904	Rural	0.7555
04290	Hot Spring County, Arkansas	04	Rural	0.7703	0.7406	99904	Rural	0.7555
04300	Howard County, Arkansas	04	Rural	0.7703	0.7406	99904	Rural	0.7555
04310	Independence County, Arkansas	04	Rural	0.7703	0.7406	99904	Rural	0.7555
04320	Izard County, Arkansas	04	Rural	0.7703	0.7406	99904	Rural	0.7555
04330	Jackson County, Arkansas	04	Rural	0.7703	0.7406	99904	Rural	0.7555
04340	Jefferson County, Arkansas	6240	Urban	0.8673	0.8673	38220	Urban	0.8673
04350	Johnson County, Arkansas	04	Rural	0.7703	0.7406	99904	Rural	0.7555
04360	Lafayette County, Arkansas	04	Rural	0.7703	0.7406	99904	Rural	0.7555
04370	Lawrence County, Arkansas	04	Rural	0.7703	0.7406	99904	Rural	0.7555
04380	Lee County, Arkansas	04	Rural	0.7703	0.7406	99904	Rural	0.7555
04390	Lincoln County, Arkansas	04	Rural	0.7703	0.8673	38220	Urban	0.8188
04400	Little River County, Arkansas	04	Rural	0.7703	0.7406	99904	Rural	0.7555
04410	Logan County, Arkansas	04	Rural	0.7703	0.7406	99904	Rural	0.7555
04420	Lonoke County, Arkansas	4400	Urban	0.8826	0.8826	30780	Urban	0.8826
04430	Madison County, Arkansas	04	Rural	0.7703	0.8636	22220	Urban	0.8170
04440	Marion County, Arkansas	04	Rural	0.7703	0.7406	99904	Rural	0.7555
04450	Miller County, Arkansas	8360	Urban	0.8413	0.8413	45500	Urban	0.8413
04460	Mississippi County, Arkansas	04	Rural	0.7703	0.7406	99904	Rural	0.7555
04470	Monroe County, Arkansas	04	Rural	0.7703	0.7406	99904	Rural	0.7555
04480	Montgomery County, Arkansas	04	Rural	0.7703	0.7406	99904	Rural	0.7555
04490	Nevada County, Arkansas	04	Rural	0.7703	0.7406	99904	Rural	0.7555
04500	Newton County, Arkansas	04	Rural	0.7703	0.7406	99904	Rural	0.7555
04510	Ouachita County, Arkansas	04	Rural	0.7703	0.7406	99904	Rural	0.7555
04520	Perry County, Arkansas	04	Rural	0.7703	0.8826	30780	Urban	0.8265
04530	Phillips County, Arkansas	04	Rural	0.7703	0.7406	99904	Rural	0.7555
04540	Pike County, Arkansas	04	Rural	0.7703	0.7406	99904	Rural	0.7555
04550	Poinsett County, Arkansas	04	Rural	0.7703	0.8144	27860	Urban	0.7924
04560	Polk County, Arkansas	04	Rural	0.7703	0.7406	99904	Rural	0.7555
04570	Pope County, Arkansas	04	Rural	0.7703	0.7406	99904	Rural	0.7555
04580	Prairie County, Arkansas	04	Rural	0.7703	0.7406	99904	Rural	0.7555
04590	Pulaski County, Arkansas	4400	Urban	0.8826	0.8826	30780	Urban	0.8826
04600	Randolph County, Arkansas	04	Rural	0.7703	0.7406	99904	Rural	0.7555
04610	St Francis County, Arkansas	04	Rural	0.7703	0.7406	99904	Rural	0.7555
04620	Saline County, Arkansas	4400	Urban	0.8826	0.8826	30780	Urban	0.8826
04630	Scott County, Arkansas	04	Rural	0.7703	0.7406	99904	Rural	0.7555
04640	Searcy County, Arkansas	04	Rural	0.7703	0.7406	99904	Rural	0.7555
04650	Sebastian County, Arkansas	2720	Urban	0.8303	0.8283	22900	Urban	0.8293
04660	Sevier County, Arkansas	04	Rural	0.7703	0.7406	99904	Rural	0.7555
04670	Sharp County, Arkansas	04	Rural	0.7703	0.7406	99904	Rural	0.7555
04680	Stone County, Arkansas	04	Rural	0.7703	0.7406	99904	Rural	0.7555
04690	Union County, Arkansas	04	Rural	0.7703	0.7406	99904	Rural	0.7555
04700	Van Buren County, Arkansas	04	Rural	0.7703	0.7406	99904	Rural	0.7555
04710	Washington County, Arkansas	2580	Urban	0.8636	0.8636	22220	Urban	0.8636
04720	White County, Arkansas	04	Rural	0.7703	0.7406	99904	Rural	0.7555
04730	Woodruff County, Arkansas	04	Rural	0.7703	0.7406	99904	Rural	0.7555
04740	Yell County, Arkansas	04	Rural	0.7703	0.7406	99904	Rural	0.7555
05000	Alameda County, California	5775	Urban	1.5220	1.5220	36084	Urban	1.5220
05010	Alpine County, California	05	Rural	1.0297	1.0524	99905	Rural	1.0411
05020	Amador County, California	05	Rural	1.0297	1.0524	99905	Rural	1.0411
05030	Butte County, California	1620	Urban	1.0542	1.0542	17020	Urban	1.0542
05040	Calaveras County, California	05	Rural	1.0297	1.0524	99905	Rural	1.0411
05050	Colusa County, California	05	Rural	1.0297	1.0524	99905	Rural	1.0411
05060	Contra Costa County, California	5775	Urban	1.5220	1.5220	36084	Urban	1.5220

TABLE 1.—FY 2006 IRF PPS TRANSITION WAGE INDEX TABLE—Continued

[For discharges occurring on or after October 1, 2005 and on or before September 30, 2006]

SSA state/ county code	County name	MSA No.	MSA urban/ rural	2006 MSA-based WI	2006 CBSA-based WI	CBSA No.	CBSA urban/ rural	Transition wage index *
05070	Del Norte County, California	05	Rural	1.0297	1.0524	99905	Rural	1.0411
05080	Eldorado County, California	6920	Urban	1.1848	1.1700	40900	Urban	1.1774
05090	Fresno County, California	2840	Urban	1.0407	1.0536	23420	Urban	1.0472
05100	Glenn County, California	05	Rural	1.0297	1.0524	99905	Rural	1.0411
05110	Humboldt County, California	05	Rural	1.0297	1.0524	99905	Rural	1.0411
05120	Imperial County, California	05	Rural	1.0297	0.8856	20940	Urban	0.9577
05130	Inyo County, California	05	Rural	1.0297	1.0524	99905	Rural	1.0411
05140	Kern County, California	0680	Urban	1.0036	1.0036	12540	Urban	1.0036
05150	Kings County, California	05	Rural	1.0297	0.9296	25260	Urban	0.9797
05160	Lake County, California	05	Rural	1.0297	1.0524	99905	Rural	1.0411
05170	Lassen County, California	05	Rural	1.0297	1.0524	99905	Rural	1.0411
05200	Los Angeles County, California	4480	Urban	1.1732	1.1732	31084	Urban	1.1732
05210	Los Angeles County, California	4480	Urban	1.1732	1.1732	31084	Urban	1.1732
05300	Madera County, California	2840	Urban	1.0407	0.8521	31460	Urban	0.9464
05310	Marin County, California	7360	Urban	1.4712	1.4712	41884	Urban	1.4712
05320	Mariposa County, California	05	Rural	1.0297	1.0524	99905	Rural	1.0411
05330	Mendocino County, California	05	Rural	1.0297	1.0524	99905	Rural	1.0411
05340	Merced County, California	4940	Urban	1.0575	1.0575	32900	Urban	1.0575
05350	Modoc County, California	05	Rural	1.0297	1.0524	99905	Rural	1.0411
05360	Mono County, California	05	Rural	1.0297	1.0524	99905	Rural	1.0411
05370	Monterey County, California	7120	Urban	1.3823	1.3823	41500	Urban	1.3823
05380	Napa County, California	8720	Urban	1.3517	1.2531	34900	Urban	1.3024
05390	Nevada County, California	05	Rural	1.0297	1.0524	99905	Rural	1.0411
05400	Orange County, California	5945	Urban	1.1611	1.1611	42044	Urban	1.1611
05410	Placer County, California	6920	Urban	1.1848	1.1700	40900	Urban	1.1774
05420	Plumas County, California	05	Rural	1.0297	1.0524	99905	Rural	1.0411
05430	Riverside County, California	6780	Urban	1.0970	1.0970	40140	Urban	1.0970
05440	Sacramento County, California	6920	Urban	1.1848	1.1700	40900	Urban	1.1774
05450	San Benito County, California	05	Rural	1.0297	1.4722	41940	Urban	1.2510
05460	San Bernardino County, California	6780	Urban	1.0970	1.0970	40140	Urban	1.0970
05470	San Diego County, California	7320	Urban	1.1267	1.1267	41740	Urban	1.1267
05480	San Francisco County, California	7360	Urban	1.4712	1.4712	41884	Urban	1.4712
05490	San Joaquin County, California	8120	Urban	1.0564	1.0564	44700	Urban	1.0564
05500	San Luis Obispo County, California	7460	Urban	1.1118	1.1118	42020	Urban	1.1118
05510	San Mateo County, California	7360	Urban	1.4712	1.4712	41884	Urban	1.4712
05520	Santa Barbara County, California	7480	Urban	1.0771	1.0771	42060	Urban	1.0771
05530	Santa Clara County, California	7400	Urban	1.4744	1.4722	41940	Urban	1.4733
05540	Santa Cruz County, California	7485	Urban	1.4779	1.4779	42100	Urban	1.4779
05550	Shasta County, California	6690	Urban	1.1835	1.1835	39820	Urban	1.1835
05560	Sierra County, California	05	Rural	1.0297	1.0524	99905	Rural	1.0411
05570	Siskiyou County, California	05	Rural	1.0297	1.0524	99905	Rural	1.0411
05580	Solano County, California	8720	Urban	1.3517	1.4279	46700	Urban	1.3898
05590	Sonoma County, California	7500	Urban	1.2961	1.2961	42220	Urban	1.2961
05600	Stanislaus County, California	5170	Urban	1.1966	1.1966	33700	Urban	1.1966
05610	Sutter County, California	9340	Urban	1.0363	1.0363	49700	Urban	1.0363
05620	Tehama County, California	05	Rural	1.0297	1.0524	99905	Rural	1.0411
05630	Trinity County, California	05	Rural	1.0297	1.0524	99905	Rural	1.0411
05640	Tulare County, California	8780	Urban	0.9975	0.9975	47300	Urban	0.9975
05650	Tuolumne County, California	05	Rural	1.0297	1.0524	99905	Rural	1.0411
05660	Ventura County, California	8735	Urban	1.1105	1.1105	37100	Urban	1.1105
05670	Yolo County, California	9270	Urban	0.9378	1.1700	40900	Urban	1.0539
05680	Yuba County, California	9340	Urban	1.0363	1.0363	49700	Urban	1.0363
06000	Adams County, Colorado	2080	Urban	1.0904	1.0904	19740	Urban	1.0904
06010	Alamosa County, Colorado	06	Rural	0.9368	0.9368	99906	Rural	0.9368
06020	Arapahoe County, Colorado	2080	Urban	1.0904	1.0904	19740	Urban	1.0904
06030	Archuleta County, Colorado	06	Rural	0.9368	0.9368	99906	Rural	0.9368
06040	Baca County, Colorado	06	Rural	0.9368	0.9368	99906	Rural	0.9368
06050	Bent County, Colorado	06	Rural	0.9368	0.9368	99906	Rural	0.9368
06060	Boulder County, Colorado	1125	Urban	1.0046	1.0046	14500	Urban	1.0046
06070	Chaffee County, Colorado	06	Rural	0.9368	0.9368	99906	Rural	0.9368
06080	Cheyenne County, Colorado	06	Rural	0.9368	0.9368	99906	Rural	0.9368
06090	Clear Creek County, Colorado	06	Rural	0.9368	1.0904	19740	Urban	1.0136
06100	Conejos County, Colorado	06	Rural	0.9368	0.9368	99906	Rural	0.9368
06110	Costilla County, Colorado	06	Rural	0.9368	0.9368	99906	Rural	0.9368
06120	Crowley County, Colorado	06	Rural	0.9368	0.9368	99906	Rural	0.9368
06130	Custer County, Colorado	06	Rural	0.9368	0.9368	99906	Rural	0.9368
06140	Delta County, Colorado	06	Rural	0.9368	0.9368	99906	Rural	0.9368
06150	Denver County, Colorado	2080	Urban	1.0904	1.0904	19740	Urban	1.0904

TABLE 1.—FY 2006 IRF PPS TRANSITION WAGE INDEX TABLE—Continued

[For discharges occurring on or after October 1, 2005 and on or before September 30, 2006]

SSA state/ county code	County name	MSA No.	MSA urban/ rural	2006 MSA-based WI	2006 CBSA-based WI	CBSA No.	CBSA urban/ rural	Transition wage index *
06160	Dolores County, Colorado	06	Rural	0.9368	0.9368	99906	Rural	0.9368
06170	Douglas County, Colorado	2080	Urban	1.0904	1.0904	19740	Urban	1.0904
06180	Eagle County, Colorado	06	Rural	0.9368	0.9368	99906	Rural	0.9368
06190	Elbert County, Colorado	06	Rural	0.9368	1.0904	19740	Urban	1.0136
06200	El Paso County, Colorado	1720	Urban	0.9792	0.9792	17820	Urban	0.9792
06210	Fremont County, Colorado	06	Rural	0.9368	0.9368	99906	Rural	0.9368
06220	Garfield County, Colorado	06	Rural	0.9368	0.9368	99906	Rural	0.9368
06230	Gilpin County, Colorado	06	Rural	0.9368	1.0904	19740	Urban	1.0136
06240	Grand County, Colorado	06	Rural	0.9368	0.9368	99906	Rural	0.9368
06250	Gunnison County, Colorado	06	Rural	0.9368	0.9368	99906	Rural	0.9368
06260	Hinsdale County, Colorado	06	Rural	0.9368	0.9368	99906	Rural	0.9368
06270	Huerfano County, Colorado	06	Rural	0.9368	0.9368	99906	Rural	0.9368
06280	Jackson County, Colorado	06	Rural	0.9368	0.9368	99906	Rural	0.9368
06290	Jefferson County, Colorado	2080	Urban	1.0904	1.0904	19740	Urban	1.0904
06300	Kiowa County, Colorado	06	Rural	0.9368	0.9368	99906	Rural	0.9368
06310	Kit Carson County, Colorado	06	Rural	0.9368	0.9368	99906	Rural	0.9368
06320	Lake County, Colorado	06	Rural	0.9368	0.9368	99906	Rural	0.9368
06330	La Plata County, Colorado	06	Rural	0.9368	0.9368	99906	Rural	0.9368
06340	Larimer County, Colorado	2670	Urban	1.0218	1.0218	22660	Urban	1.0218
06350	Las Animas County, Colorado	06	Rural	0.9368	0.9368	99906	Rural	0.9368
06360	Lincoln County, Colorado	06	Rural	0.9368	0.9368	99906	Rural	0.9368
06370	Logan County, Colorado	06	Rural	0.9368	0.9368	99906	Rural	0.9368
06380	Mesa County, Colorado	2995	Urban	0.9900	0.9900	24300	Urban	0.9900
06390	Mineral County, Colorado	06	Rural	0.9368	0.9368	99906	Rural	0.9368
06400	Moffat County, Colorado	06	Rural	0.9368	0.9368	99906	Rural	0.9368
06410	Montezuma County, Colorado	06	Rural	0.9368	0.9368	99906	Rural	0.9368
06420	Montrose County, Colorado	06	Rural	0.9368	0.9368	99906	Rural	0.9368
06430	Morgan County, Colorado	06	Rural	0.9368	0.9368	99906	Rural	0.9368
06440	Otero County, Colorado	06	Rural	0.9368	0.9368	99906	Rural	0.9368
06450	Ouray County, Colorado	06	Rural	0.9368	0.9368	99906	Rural	0.9368
06460	Park County, Colorado	06	Rural	0.9368	1.0904	19740	Urban	1.0136
06470	Phillips County, Colorado	06	Rural	0.9368	0.9368	99906	Rural	0.9368
06480	Pitkin County, Colorado	06	Rural	0.9368	0.9368	99906	Rural	0.9368
06490	Prowers County, Colorado	06	Rural	0.9368	0.9368	99906	Rural	0.9368
06500	Pueblo County, Colorado	6560	Urban	0.8752	0.8752	39380	Urban	0.8752
06510	Rio Blanco County, Colorado	06	Rural	0.9368	0.9368	99906	Rural	0.9368
06520	Rio Grande County, Colorado	06	Rural	0.9368	0.9368	99906	Rural	0.9368
06530	Routt County, Colorado	06	Rural	0.9368	0.9368	99906	Rural	0.9368
06540	Saguache County, Colorado	06	Rural	0.9368	0.9368	99906	Rural	0.9368
06550	San Juan County, Colorado	06	Rural	0.9368	0.9368	99906	Rural	0.9368
06560	San Miguel County, Colorado	06	Rural	0.9368	0.9368	99906	Rural	0.9368
06570	Sedgwick County, Colorado	06	Rural	0.9368	0.9368	99906	Rural	0.9368
06580	Summit County, Colorado	06	Rural	0.9368	0.9368	99906	Rural	0.9368
06590	Teller County, Colorado	06	Rural	0.9368	0.9792	17820	Urban	0.9580
06600	Washington County, Colorado	06	Rural	0.9368	0.9368	99906	Rural	0.9368
06610	Weld County, Colorado	3060	Urban	0.9444	0.9444	24540	Urban	0.9444
06620	Yuma County, Colorado	06	Rural	0.9368	0.9368	99906	Rural	0.9368
06630	Broomfield County, Colorado	2080	Urban	1.0904	1.0904	19740	Urban	1.0904
07000	Fairfield County, Connecticut	5483	Urban	1.2254	1.2835	14860	Urban	1.2545
07010	Hartford County, Connecticut	3283	Urban	1.1054	1.1054	25540	Urban	1.1054
07020	Litchfield County, Connecticut	3283	Urban	1.1054	1.1054	25540	Urban	1.1054
07030	Middlesex County, Connecticut	3283	Urban	1.1054	1.1054	25540	Urban	1.1054
07040	New Haven County, Connecticut	5483	Urban	1.2254	1.1807	35300	Urban	1.2031
07050	New London County, Connecticut	5523	Urban	1.1596	1.1596	35980	Urban	1.1596
07060	Tolland County, Connecticut	3283	Urban	1.1054	1.1054	25540	Urban	1.1054
07070	Windham County, Connecticut	07	Rural	1.1917	1.1917	99907	Rural	1.1917
08000	Kent County, Delaware	2190	Urban	0.9825	0.9825	20100	Urban	0.9825
08010	New Castle County, Delaware	9160	Urban	1.1121	1.1049	48864	Urban	1.1085
08020	Sussex County, Delaware	08	Rural	0.9503	0.9503	99908	Rural	0.9503
09000	Washington Dc County, Dist Of Col	8840	Urban	1.0971	1.1023	47894	Urban	1.0997
10000	Alachua County, Florida	2900	Urban	0.9459	0.9459	23540	Urban	0.9459
01010	Baker County, Florida	10	Rural	0.8721	0.9537	27260	Urban	0.9129
10020	Bay County, Florida	6015	Urban	0.8124	0.8124	37460	Urban	0.8124
10030	Bradford County, Florida	10	Rural	0.8721	0.8574	99910	Rural	0.8648
10040	Brevard County, Florida	4900	Urban	0.9633	0.9633	37340	Urban	0.9633
10050	Broward County, Florida	2680	Urban	1.0165	1.0165	22744	Urban	1.0165
10060	Calhoun County, Florida	10	Rural	0.8721	0.8574	99910	Rural	0.8648
10070	Charlotte County, Florida	6580	Urban	0.9441	0.9441	39460	Urban	0.9441

TABLE 1.—FY 2006 IRF PPS TRANSITION WAGE INDEX TABLE—Continued

[For discharges occurring on or after October 1, 2005 and on or before September 30, 2006]

SSA state/ county code	County name	MSA No.	MSA urban/ rural	2006 MSA-based WI	2006 CBSA-based WI	CBSA No.	CBSA urban/ rural	Transition wage index *
10080	Citrus County, Florida	10	Rural	0.8721	0.8574	99910	Rural	0.8648
10090	Clay County, Florida	3600	Urban	0.9548	0.9537	27260	Urban	0.9543
10100	Collier County, Florida	5345	Urban	1.0558	1.0558	34940	Urban	1.0558
10110	Columbia County, Florida	10	Rural	0.8721	0.8574	99910	Rural	0.8648
10120	Dade County, Florida	5000	Urban	0.9870	0.9870	33124	Urban	0.9870
10130	De Soto County, Florida	10	Rural	0.8721	0.8574	99910	Rural	0.8648
10140	Dixie County, Florida	10	Rural	0.8721	0.8574	99910	Rural	0.8648
10150	Duval County, Florida	3600	Urban	0.9548	0.9537	27260	Urban	0.9543
10160	Escambia County, Florida	6080	Urban	0.8306	0.8306	37860	Urban	0.8306
10170	Flagler County, Florida	2020	Urban	0.8900	0.8574	99910	Rural	0.8737
10180	Franklin County, Florida	10	Rural	0.8721	0.8574	99910	Rural	0.8648
10190	Gadsden County, Florida	8240	Urban	0.8655	0.8655	45220	Urban	0.8655
10200	Gilchrist County, Florida	10	Rural	0.8721	0.9459	23540	Urban	0.9090
10210	Glades County, Florida	10	Rural	0.8721	0.8574	99910	Rural	0.8648
10220	Gulf County, Florida	10	Rural	0.8721	0.8574	99910	Rural	0.8648
10230	Hamilton County, Florida	10	Rural	0.8721	0.8574	99910	Rural	0.8648
10240	Hardee County, Florida	10	Rural	0.8721	0.8574	99910	Rural	0.8648
10250	Hendry County, Florida	10	Rural	0.8721	0.8574	99910	Rural	0.8648
10260	Hernando County, Florida	8280	Urban	0.9024	0.9024	45300	Urban	0.9024
10270	Highlands County, Florida	10	Rural	0.8721	0.8574	99910	Rural	0.8648
10280	Hillsborough County, Florida	8280	Urban	0.9024	0.9024	45300	Urban	0.9024
10290	Holmes County, Florida	10	Rural	0.8721	0.8574	99910	Rural	0.8648
10300	Indian River County, Florida	10	Rural	0.8721	0.9477	46940	Urban	0.9099
10310	Jackson County, Florida	10	Rural	0.8721	0.8574	99910	Rural	0.8648
10320	Jefferson County, Florida	10	Rural	0.8721	0.8655	45220	Urban	0.8688
10330	Lafayette County, Florida	10	Rural	0.8721	0.8574	99910	Rural	0.8648
10340	Lake County, Florida	5960	Urban	0.9742	0.9742	36740	Urban	0.9742
10350	Lee County, Florida	2700	Urban	0.9371	0.9371	15980	Urban	0.9371
10360	Leon County, Florida	8240	Urban	0.8655	0.8655	45220	Urban	0.8655
10370	Levy County, Florida	10	Rural	0.8721	0.8574	99910	Rural	0.8648
10380	Liberty County, Florida	10	Rural	0.8721	0.8574	99910	Rural	0.8648
10390	Madison County, Florida	10	Rural	0.8721	0.8574	99910	Rural	0.8648
10400	Manatee County, Florida	7510	Urban	0.9629	0.9629	42260	Urban	0.9629
10410	Marion County, Florida	5790	Urban	0.9153	0.9153	36100	Urban	0.9153
10420	Martin County, Florida	2710	Urban	1.0046	1.0046	38940	Urban	1.0046
10430	Monroe County, Florida	10	Rural	0.8721	0.8574	99910	Rural	0.8648
10440	Nassau County, Florida	3600	Urban	0.9548	0.9537	27260	Urban	0.9543
10450	Okaloosa County, Florida	2750	Urban	0.8786	0.8786	23020	Urban	0.8786
10460	Okeechobee County, Florida	10	Rural	0.8721	0.8574	99910	Rural	0.8648
10470	Orange County, Florida	5960	Urban	0.9742	0.9742	36740	Urban	0.9742
10480	Osceola County, Florida	5960	Urban	0.9742	0.9742	36740	Urban	0.9742
10490	Palm Beach County, Florida	8960	Urban	1.0362	1.0362	48424	Urban	1.0362
10500	Pasco County, Florida	8280	Urban	0.9024	0.9024	45300	Urban	0.9024
10510	Pinellas County, Florida	8280	Urban	0.9024	0.9024	45300	Urban	0.9024
10520	Polk County, Florida	3980	Urban	0.8930	0.8930	29460	Urban	0.8930
10530	Putnam County, Florida	10	Rural	0.8721	0.8574	99910	Rural	0.8648
10540	Johns County, Florida	3600	Urban	0.9548	0.9537	27260	Urban	0.9543
10550	St Lucie County, Florida	2710	Urban	1.0046	1.0046	38940	Urban	1.0046
10560	Santa Rosa County, Florida	6080	Urban	0.8306	0.8306	37860	Urban	0.8306
10570	Sarasota County, Florida	7510	Urban	0.9629	0.9629	42260	Urban	0.9629
10580	Seminole County, Florida	5960	Urban	0.9742	0.9742	36740	Urban	0.9742
10590	Sumter County, Florida	10	Rural	0.8721	0.8574	99910	Rural	0.8648
10600	Suwannee County, Florida	10	Rural	0.8721	0.8574	99910	Rural	0.8648
10610	Taylor County, Florida	10	Rural	0.8721	0.8574	99910	Rural	0.8648
10620	Union County, Florida	10	Rural	0.8721	0.8574	99910	Rural	0.8648
10630	Volusia County, Florida	2020	Urban	0.8900	0.8898	19660	Urban	0.8899
10640	Wakulla County, Florida	10	Rural	0.8721	0.8655	45220	Urban	0.8688
10650	Walton County, Florida	10	Rural	0.8721	0.8574	99910	Rural	0.8648
10660	Washington County, Florida	10	Rural	0.8721	0.8574	99910	Rural	0.8648
11000	Appling County, Georgia	11	Rural	0.8247	0.7733	99911	Rural	0.7990
11010	Atkinson County, Georgia	11	Rural	0.8247	0.7733	99911	Rural	0.7990
11011	Bacon County, Georgia	11	Rural	0.8247	0.7733	99911	Rural	0.7990
11020	Baker County, Georgia	11	Rural	0.8247	1.1266	10500	Urban	0.9757
11030	Baldwin County, Georgia	11	Rural	0.8247	0.7733	99911	Rural	0.7990
11040	Banks County, Georgia	11	Rural	0.8247	0.7733	99911	Rural	0.7990
11050	Barrow County, Georgia	0520	Urban	0.9971	0.9971	12060	Urban	0.9971
11060	Bartow County, Georgia	0520	Urban	0.9971	0.9971	12060	Urban	0.9971
11070	Ben Hill County, Georgia	11	Rural	0.8247	0.7733	99911	Rural	0.7990

TABLE 1.—FY 2006 IRF PPS TRANSITION WAGE INDEX TABLE—Continued

[For discharges occurring on or after October 1, 2005 and on or before September 30, 2006]

SSA state/ county code	County name	MSA No.	MSA urban/ rural	2006 MSA-based WI	2006 CBSA-based WI	CBSA No.	CBSA urban/ rural	Transition wage index *
11080	Berrien County, Georgia	11	Rural	0.8247	0.7733	99911	Rural	0.7990
11090	Bibb County, Georgia	4680	Urban	0.9596	0.9887	31420	Urban	0.9742
11100	Bleckley County, Georgia	11	Rural	0.8247	0.7733	99911	Rural	0.7990
11110	Brantley County, Georgia	11	Rural	0.8247	1.1933	5260	Urban	1.0090
11120	Brooks County, Georgia	11	Rural	0.8247	0.8341	46660	Urban	0.8294
11130	Bryan County, Georgia	7520	Urban	0.9460	0.9460	42340	Urban	0.9460
11140	Bulloch County, Georgia	11	Rural	0.8247	0.7733	99911	Rural	0.7990
11150	Burke County, Georgia	11	Rural	0.8247	0.9154	12260	Urban	0.8701
11160	Butts County, Georgia	11	Rural	0.8247	0.9971	12060	Urban	0.9109
11161	Calhoun County, Georgia	11	Rural	0.8247	0.7733	99911	Rural	0.7990
11170	Camden County, Georgia	11	Rural	0.8247	0.7733	99911	Rural	0.7990
11180	Candler County, Georgia	11	Rural	0.8247	0.7733	99911	Rural	0.7990
11190	Carroll County, Georgia	0520	Urban	0.9971	0.9971	12060	Urban	0.9971
11200	Catoosa County, Georgia	1560	Urban	0.9207	0.9207	16860	Urban	0.9207
11210	Charlton County, Georgia	11	Rural	0.8247	0.7733	99911	Rural	0.7990
11220	Chatham County, Georgia	7520	Urban	0.9460	0.9460	42340	Urban	0.9460
11230	Chattahoochee County, Georgia	1800	Urban	0.8690	0.8690	17980	Urban	0.8690
11240	Chattooga County, Georgia	11	Rural	0.8247	0.7733	99911	Rural	0.7990
11250	Cherokee County, Georgia	0520	Urban	0.9971	0.9971	12060	Urban	0.9971
11260	Clarke County, Georgia	0500	Urban	1.0202	1.0202	12020	Urban	1.0202
11270	Clay County, Georgia	11	Rural	0.8247	0.7733	99911	Rural	0.7990
11280	Clayton County, Georgia	0520	Urban	0.9971	0.9971	12060	Urban	0.9971
11281	Clinch County, Georgia	11	Rural	0.8247	0.7733	99911	Rural	0.7990
11290	Cobb County, Georgia	0520	Urban	0.9971	0.9971	12060	Urban	0.9971
11291	Coffee County, Georgia	11	Rural	0.8247	0.7733	99911	Rural	0.7990
11300	Colquitt County, Georgia	11	Rural	0.8247	0.7733	99911	Rural	0.7990
11310	Columbia County, Georgia	0600	Urban	0.9208	0.9154	12260	Urban	0.9181
11311	Cook County, Georgia	11	Rural	0.8247	0.7733	99911	Rural	0.7990
11320	Coweta County, Georgia	0520	Urban	0.9971	0.9971	12060	Urban	0.9971
11330	Crawford County, Georgia	11	Rural	0.8247	0.9887	31420	Urban	0.9067
11340	Crisp County, Georgia	11	Rural	0.8247	0.7733	99911	Rural	0.7990
11341	Dade County, Georgia	1560	Urban	0.9207	0.9207	16860	Urban	0.9207
11350	Dawson County, Georgia	11	Rural	0.8247	0.9971	12060	Urban	0.9109
11360	Decatur County, Georgia	11	Rural	0.8247	0.7733	99911	Rural	0.7990
11370	De Kalb County, Georgia	0520	Urban	0.9971	0.9971	12060	Urban	0.9971
11380	Dodge County, Georgia	11	Rural	0.8247	0.7733	99911	Rural	0.7990
11381	Dooly County, Georgia	11	Rural	0.8247	0.7733	99911	Rural	0.7990
11390	Dougherty County, Georgia	0120	Urban	1.1266	1.1266	10500	Urban	1.1266
11400	Douglas County, Georgia	0520	Urban	0.9971	0.9971	12060	Urban	0.9971
11410	Early County, Georgia	11	Rural	0.8247	0.7733	99911	Rural	0.7990
11420	Echols County, Georgia	11	Rural	0.8247	0.8341	46660	Urban	0.8294
11421	Effingham County, Georgia	7520	Urban	0.9460	0.9460	42340	Urban	0.9460
11430	Elbert County, Georgia	11	Rural	0.8247	0.7733	99911	Rural	0.7990
11440	Emanuel County, Georgia	11	Rural	0.8247	0.7733	99911	Rural	0.7990
11441	Evans County, Georgia	11	Rural	0.8247	0.7733	99911	Rural	0.7990
11450	Fannin County, Georgia	11	Rural	0.8247	0.7733	99911	Rural	0.7990
11451	Fayette County, Georgia	0520	Urban	0.9971	0.9971	12060	Urban	0.9971
11460	Floyd County, Georgia	11	Rural	0.8247	0.8878	40660	Urban	0.8563
11461	Forsyth County, Georgia	0520	Urban	0.9971	0.9971	12060	Urban	0.9971
11462	Franklin County, Georgia	11	Rural	0.8247	0.7733	99911	Rural	0.7990
11470	Fulton County, Georgia	0520	Urban	0.9971	0.9971	12060	Urban	0.9971
11471	Gilmer County, Georgia	11	Rural	0.8247	0.7733	99911	Rural	0.7990
11480	Glascock County, Georgia	11	Rural	0.8247	0.7733	99911	Rural	0.7990
11490	Glynn County, Georgia	11	Rural	0.8247	1.1933	15260	Urban	1.0090
11500	Gordon County, Georgia	11	Rural	0.8247	0.7733	99911	Rural	0.7990
11510	Grady County, Georgia	11	Rural	0.8247	0.7733	99911	Rural	0.7990
11520	Greene County, Georgia	11	Rural	0.8247	0.7733	99911	Rural	0.7990
11530	Gwinnett County, Georgia	0520	Urban	0.9971	0.9971	12060	Urban	0.9971
11540	Habersham County, Georgia	11	Rural	0.8247	0.7733	99911	Rural	0.7990
11550	Hall County, Georgia	11	Rural	0.8247	0.9557	23580	Urban	0.8902
11560	Hancock County, Georgia	11	Rural	0.8247	0.7733	99911	Rural	0.7990
11570	Haralson County, Georgia	11	Rural	0.8247	0.9971	12060	Urban	0.9109
11580	Harris County, Georgia	1800	Urban	0.8690	0.8690	17980	Urban	0.8690
11581	Hart County, Georgia	11	Rural	0.8247	0.7733	99911	Rural	0.7990
11590	Heard County, Georgia	11	Rural	0.8247	0.9971	12060	Urban	0.9109
11591	Henry County, Georgia	0520	Urban	0.9971	0.9971	12060	Urban	0.9971
11600	Houston County, Georgia	4680	Urban	0.9596	0.8489	47580	Urban	0.9043
11601	Irwin County, Georgia	11	Rural	0.8247	0.7733	99911	Rural	0.7990

TABLE 1.—FY 2006 IRF PPS TRANSITION WAGE INDEX TABLE—Continued

[For discharges occurring on or after October 1, 2005 and on or before September 30, 2006]

SSA state/ county code	County name	MSA No.	MSA urban/ rural	2006 MSA-based WI	2006 CBSA-based WI	CBSA No.	CBSA urban/ rural	Transition wage index *
11610	Jackson County, Georgia	11	Rural	0.8247	0.7733	99911	Rural	0.7990
11611	Jasper County, Georgia	11	Rural	0.8247	0.9971	12060	Urban	0.9109
11612	Jeff Davis County, Georgia	11	Rural	0.8247	0.7733	99911	Rural	0.7990
11620	Jefferson County, Georgia	11	Rural	0.8247	0.7733	99911	Rural	0.7990
11630	Jenkins County, Georgia	11	Rural	0.8247	0.7733	99911	Rural	0.7990
11640	Johnson County, Georgia	11	Rural	0.8247	0.7733	99911	Rural	0.7990
11650	Jones County, Georgia	4680	Urban	0.9596	0.9887	31420	Urban	0.9742
11651	Lamar County, Georgia	11	Rural	0.8247	0.9971	12060	Urban	0.9109
11652	Lanier County, Georgia	11	Rural	0.8247	0.8341	46660	Urban	0.8294
11660	Laurens County, Georgia	11	Rural	0.8247	0.7733	99911	Rural	0.7990
11670	Lee County, Georgia	0120	Urban	1.1266	1.1266	10500	Urban	1.1266
11680	Liberty County, Georgia	11	Rural	0.8247	0.7715	25980	Urban	0.7981
11690	Lincoln County, Georgia	11	Rural	0.8247	0.7733	99911	Rural	0.7990
11691	Long County, Georgia	11	Rural	0.8247	0.7715	25980	Urban	0.7981
11700	Lowndes County, Georgia	11	Rural	0.8247	0.8341	46660	Urban	0.8294
11701	Lumpkin County, Georgia	11	Rural	0.8247	0.7733	99911	Rural	0.7990
11702	Mc Duffie County, Georgia	0600	Urban	0.9208	0.9154	12260	Urban	0.9181
11703	Mc Intosh County, Georgia	11	Rural	0.8247	1.1933	5260	Urban	1.0090
11710	Macon County, Georgia	11	Rural	0.8247	0.7733	99911	Rural	0.7990
11720	Madison County, Georgia	0500	Urban	1.0202	1.0202	12020	Urban	1.0202
11730	Marion County, Georgia	11	Rural	0.8247	0.8690	17980	Urban	0.8469
11740	Meriwether County, Georgia	11	Rural	0.8247	0.9971	12060	Urban	0.9109
11741	Miller County, Georgia	11	Rural	0.8247	0.7733	99911	Rural	0.7990
11750	Mitchell County, Georgia	11	Rural	0.8247	0.7733	99911	Rural	0.7990
11760	Monroe County, Georgia	11	Rural	0.8247	0.9887	31420	Urban	0.9067
11770	Montgomery County, Georgia	11	Rural	0.8247	0.7733	99911	Rural	0.7990
11771	Morgan County, Georgia	11	Rural	0.8247	0.7733	99911	Rural	0.7990
11772	Murray County, Georgia	11	Rural	0.8247	0.9558	19140	Urban	0.8903
11780	Muscogee County, Georgia	1800	Urban	0.8690	0.8690	17980	Urban	0.8690
11790	Newton County, Georgia	0520	Urban	0.9971	0.9971	12060	Urban	0.9971
11800	Oconee County, Georgia	0500	Urban	1.0202	1.0202	12020	Urban	1.0202
11801	Oglethorpe County, Georgia	11	Rural	0.8247	1.0202	12020	Urban	0.9225
11810	Paulding County, Georgia	0520	Urban	0.9971	0.9971	12060	Urban	0.9971
11811	Peach County, Georgia	4680	Urban	0.9596	0.7733	99911	Rural	0.8665
11812	Pickens County, Georgia	0520	Urban	0.9971	0.9971	12060	Urban	0.9971
11820	Pierce County, Georgia	11	Rural	0.8247	0.7733	99911	Rural	0.7990
11821	Pike County, Georgia	11	Rural	0.8247	0.9971	12060	Urban	0.9109
11830	Polk County, Georgia	11	Rural	0.8247	0.7733	99911	Rural	0.7990
11831	Pulaski County, Georgia	11	Rural	0.8247	0.7733	99911	Rural	0.7990
11832	Putnam County, Georgia	11	Rural	0.8247	0.7733	99911	Rural	0.7990
11833	Quitman County, Georgia	11	Rural	0.8247	0.7733	99911	Rural	0.7990
11834	Rabun County, Georgia	11	Rural	0.8247	0.7733	99911	Rural	0.7990
11835	Randolph County, Georgia	11	Rural	0.8247	0.7733	99911	Rural	0.7990
11840	Richmond County, Georgia	0600	Urban	0.9208	0.9154	12260	Urban	0.9181
11841	Rockdale County, Georgia	0520	Urban	0.9971	0.9971	12060	Urban	0.9971
11842	Schley County, Georgia	11	Rural	0.8247	0.7733	99911	Rural	0.7990
11850	Screven County, Georgia	11	Rural	0.8247	0.7733	99911	Rural	0.7990
11851	Seminole County, Georgia	11	Rural	0.8247	0.7733	99911	Rural	0.7990
11860	Spalding County, Georgia	0520	Urban	0.9971	0.9971	12060	Urban	0.9971
11861	Stephens County, Georgia	11	Rural	0.8247	0.7733	99911	Rural	0.7990
11862	Stewart County, Georgia	11	Rural	0.8247	0.7733	99911	Rural	0.7990
11870	Sumter County, Georgia	11	Rural	0.8247	0.7733	99911	Rural	0.7990
11880	Talbot County, Georgia	11	Rural	0.8247	0.7733	99911	Rural	0.7990
11881	Taliaferro County, Georgia	11	Rural	0.8247	0.7733	99911	Rural	0.7990
11882	Tattnall County, Georgia	11	Rural	0.8247	0.7733	99911	Rural	0.7990
11883	Taylor County, Georgia	11	Rural	0.8247	0.7733	99911	Rural	0.7990
11884	Telfair County, Georgia	11	Rural	0.8247	0.7733	99911	Rural	0.7990
11885	Terrell County, Georgia	11	Rural	0.8247	1.1266	10500	Urban	0.9757
11890	Thomas County, Georgia	11	Rural	0.8247	0.7733	99911	Rural	0.7990
11900	Tift County, Georgia	11	Rural	0.8247	0.7733	99911	Rural	0.7990
11901	Toombs County, Georgia	11	Rural	0.8247	0.7733	99911	Rural	0.7990
11902	Towns County, Georgia	11	Rural	0.8247	0.7733	99911	Rural	0.7990
11903	Treutlen County, Georgia	11	Rural	0.8247	0.7733	99911	Rural	0.7990
11910	Troup County, Georgia	11	Rural	0.8247	0.7733	99911	Rural	0.7990
11911	Turner County, Georgia	11	Rural	0.8247	0.7733	99911	Rural	0.7990
11912	Twiggs County, Georgia	4680	Urban	0.9596	0.9887	31420	Urban	0.9742
11913	Union County, Georgia	11	Rural	0.8247	0.7733	99911	Rural	0.7990
11920	Upson County, Georgia	11	Rural	0.8247	0.7733	99911	Rural	0.7990

TABLE 1.—FY 2006 IRF PPS TRANSITION WAGE INDEX TABLE—Continued

[For discharges occurring on or after October 1, 2005 and on or before September 30, 2006]

SSA state/ county code	County name	MSA No.	MSA urban/ rural	2006 MSA-based WI	2006 CBSA-based WI	CBSA No.	CBSA urban/ rural	Transition wage index *
11921	Walker County, Georgia	1560	Urban	0.9207	0.9207	16860	Urban	0.9207
11930	Walton County, Georgia	0520	Urban	0.9971	0.9971	12060	Urban	0.9971
11940	Ware County, Georgia	11	Rural	0.8247	0.7733	99911	Rural	0.7990
11941	Warren County, Georgia	11	Rural	0.8247	0.7733	99911	Rural	0.7990
11950	Washington County, Georgia	11	Rural	0.8247	0.7733	99911	Rural	0.7990
11960	Wayne County, Georgia	11	Rural	0.8247	0.7733	99911	Rural	0.7990
11961	Webster County, Georgia	11	Rural	0.8247	0.7733	99911	Rural	0.7990
11962	Wheeler County, Georgia	11	Rural	0.8247	0.7733	99911	Rural	0.7990
11963	White County, Georgia	11	Rural	0.8247	0.7733	99911	Rural	0.7990
11970	Whitfield County, Georgia	11	Rural	0.8247	0.9558	19140	Urban	0.8903
11971	Wilcox County, Georgia	11	Rural	0.8247	0.7733	99911	Rural	0.7990
11972	Wilkes County, Georgia	11	Rural	0.8247	0.7733	99911	Rural	0.7990
11973	Wilkinson County, Georgia	11	Rural	0.8247	0.7733	99911	Rural	0.7990
11980	Worth County, Georgia	11	Rural	0.8247	1.1266	10500	Urban	0.9757
12005	Kalawao County, Hawaii	12	Rural	1.0522	1.0522	99912	Rural	1.0522
12010	Hawaii County, Hawaii	12	Rural	1.0522	1.0522	99912	Rural	1.0522
12020	Honolulu County, Hawaii	3320	Urban	1.1013	1.1013	26180	Urban	1.1013
12040	Kauai County, Hawaii	12	Rural	1.0522	1.0522	99912	Rural	1.0522
12050	Maui County, Hawaii	12	Rural	1.0522	1.0522	99912	Rural	1.0522
13000	Ada County, Idaho	1080	Urban	0.9352	0.9352	14260	Urban	0.9352
13010	Adams County, Idaho	13	Rural	0.8826	0.8227	99913	Rural	0.8527
13020	Bannock County, Idaho	6340	Urban	0.9601	0.9601	38540	Urban	0.9601
13030	Bear Lake County, Idaho	13	Rural	0.8826	0.8227	99913	Rural	0.8527
13040	Benewah County, Idaho	13	Rural	0.8826	0.8227	99913	Rural	0.8527
13050	Bingham County, Idaho	13	Rural	0.8826	0.8227	99913	Rural	0.8527
13060	Blaine County, Idaho	13	Rural	0.8826	0.8227	99913	Rural	0.8527
13070	Boise County, Idaho	13	Rural	0.8826	0.9352	14260	Urban	0.9089
13080	Bonner County, Idaho	13	Rural	0.8826	0.8227	99913	Rural	0.8527
13090	Bonneville County, Idaho	13	Rural	0.8826	0.9059	26820	Urban	0.8943
13100	Boundary County, Idaho	13	Rural	0.8826	0.8227	99913	Rural	0.8527
13110	Butte County, Idaho	13	Rural	0.8826	0.8227	99913	Rural	0.8527
13120	Camas County, Idaho	13	Rural	0.8826	0.8227	99913	Rural	0.8527
13130	Canyon County, Idaho	1080	Urban	0.9352	0.9352	14260	Urban	0.9352
13140	Caribou County, Idaho	13	Rural	0.8826	0.8227	99913	Rural	0.8527
13150	Cassia County, Idaho	13	Rural	0.8826	0.8227	99913	Rural	0.8527
13160	Clark County, Idaho	13	Rural	0.8826	0.8227	99913	Rural	0.8527
13170	Clearwater County, Idaho	13	Rural	0.8826	0.8227	99913	Rural	0.8527
13180	Custer County, Idaho	13	Rural	0.8826	0.8227	99913	Rural	0.8527
13190	Elmore County, Idaho	13	Rural	0.8826	0.8227	99913	Rural	0.8527
13200	Franklin County, Idaho	13	Rural	0.8826	0.9094	30860	Urban	0.8960
13210	Fremont County, Idaho	13	Rural	0.8826	0.8227	99913	Rural	0.8527
13220	Gem County, Idaho	13	Rural	0.8826	0.9352	14260	Urban	0.9089
13230	Gooding County, Idaho	13	Rural	0.8826	0.8227	99913	Rural	0.8527
13240	Idaho County, Idaho	13	Rural	0.8826	0.8227	99913	Rural	0.8527
13250	Jefferson County, Idaho	13	Rural	0.8826	0.9059	26820	Urban	0.8943
13260	Jerome County, Idaho	13	Rural	0.8826	0.8227	99913	Rural	0.8527
13270	Kootenai County, Idaho	13	Rural	0.8826	0.9339	17660	Urban	0.9083
13280	Latah County, Idaho	13	Rural	0.8826	0.8227	99913	Rural	0.8527
13290	Lemhi County, Idaho	13	Rural	0.8826	0.8227	99913	Rural	0.8527
13300	Lewis County, Idaho	13	Rural	0.8826	0.8227	99913	Rural	0.8527
13310	Lincoln County, Idaho	13	Rural	0.8826	0.8227	99913	Rural	0.8527
13320	Madison County, Idaho	13	Rural	0.8826	0.8227	99913	Rural	0.8527
13330	Minidoka County, Idaho	13	Rural	0.8826	0.8227	99913	Rural	0.8527
13340	Nez Perce County, Idaho	13	Rural	0.8826	0.9314	30300	Urban	0.9070
13350	Oneida County, Idaho	13	Rural	0.8826	0.8227	99913	Rural	0.8527
13360	Owyhee County, Idaho	13	Rural	0.8826	0.9352	14260	Urban	0.9089
13370	Payette County, Idaho	13	Rural	0.8826	0.8227	99913	Rural	0.8527
13380	Power County, Idaho	13	Rural	0.8826	0.9601	38540	Urban	0.9214
13390	Shoshone County, Idaho	13	Rural	0.8826	0.8227	99913	Rural	0.8527
13400	Teton County, Idaho	13	Rural	0.8826	0.8227	99913	Rural	0.8527
13410	Twin Falls County, Idaho	13	Rural	0.8826	0.8227	99913	Rural	0.8527
13420	Valley County, Idaho	13	Rural	0.8826	0.8227	99913	Rural	0.8527
13430	Washington County, Idaho	13	Rural	0.8826	0.8227	99913	Rural	0.8527
14000	Adams County, Illinois	14	Rural	0.8340	0.8339	99914	Rural	0.8340
14010	Alexander County, Illinois	14	Rural	0.8340	0.8339	99914	Rural	0.8340
14020	Bond County, Illinois	14	Rural	0.8340	0.9076	41180	Urban	0.8708
14030	Boone County, Illinois	6880	Urban	0.9626	0.9626	40420	Urban	0.9626
14040	Brown County, Illinois	14	Rural	0.8340	0.8339	99914	Rural	0.8340

TABLE 1.—FY 2006 IRF PPS TRANSITION WAGE INDEX TABLE—Continued

[For discharges occurring on or after October 1, 2005 and on or before September 30, 2006]

SSA state/ county code	County name	MSA No.	MSA urban/ rural	2006 MSA-based WI	2006 CBSA-based WI	CBSA No.	CBSA urban/ rural	Transition wage index *
14050	Bureau County, Illinois	14	Rural	0.8340	0.8339	99914	Rural	0.8340
14060	Calhoun County, Illinois	14	Rural	0.8340	0.9076	41180	Urban	0.8708
14070	Carroll County, Illinois	14	Rural	0.8340	0.8339	99914	Rural	0.8340
14080	Cass County, Illinois	14	Rural	0.8340	0.8339	99914	Rural	0.8340
14090	Champaign County, Illinois	1400	Urban	0.9527	0.9527	16580	Urban	0.9527
14100	Christian County, Illinois	14	Rural	0.8340	0.8339	99914	Rural	0.8340
14110	Clark County, Illinois	14	Rural	0.8340	0.8339	99914	Rural	0.8340
14120	Clay County, Illinois	14	Rural	0.8340	0.8339	99914	Rural	0.8340
14130	Clinton County, Illinois	7040	Urban	0.9081	0.9076	41180	Urban	0.9079
14140	Coles County, Illinois	14	Rural	0.8340	0.8339	99914	Rural	0.8340
14141	Cook County, Illinois	1600	Urban	1.0851	1.0868	16974	Urban	1.0860
14150	Crawford County, Illinois	14	Rural	0.8340	0.8339	99914	Rural	0.8340
14160	Cumberland County, Illinois	14	Rural	0.8340	0.8339	99914	Rural	0.8340
14170	De Kalb County, Illinois	1600	Urban	1.0851	1.0868	16974	Urban	1.0860
14180	De Witt County, Illinois	14	Rural	0.8340	0.8339	99914	Rural	0.8340
14190	Douglas County, Illinois	14	Rural	0.8340	0.8339	99914	Rural	0.8340
14250	Du Page County, Illinois	1600	Urban	1.0851	1.0868	16974	Urban	1.0860
14310	Edgar County, Illinois	14	Rural	0.8340	0.8339	99914	Rural	0.8340
14320	Edwards County, Illinois	14	Rural	0.8340	0.8339	99914	Rural	0.8340
14330	Effingham County, Illinois	14	Rural	0.8340	0.8339	99914	Rural	0.8340
14340	Fayette County, Illinois	14	Rural	0.8340	0.8339	99914	Rural	0.8340
14350	Ford County, Illinois	14	Rural	0.8340	0.9527	16580	Urban	0.8934
14360	Franklin County, Illinois	14	Rural	0.8340	0.8339	99914	Rural	0.8340
14370	Fulton County, Illinois	14	Rural	0.8340	0.8339	99914	Rural	0.8340
14380	Gallatin County, Illinois	14	Rural	0.8340	0.8339	99914	Rural	0.8340
14390	Greene County, Illinois	14	Rural	0.8340	0.8339	99914	Rural	0.8340
14400	Grundy County, Illinois	1600	Urban	1.0851	1.0868	16974	Urban	1.0860
14410	Hamilton County, Illinois	14	Rural	0.8340	0.8339	99914	Rural	0.8340
14420	Hancock County, Illinois	14	Rural	0.8340	0.8339	99914	Rural	0.8340
14421	Hardin County, Illinois	14	Rural	0.8340	0.8339	99914	Rural	0.8340
14440	Henderson County, Illinois	14	Rural	0.8340	0.8339	99914	Rural	0.8340
14450	Henry County, Illinois	1960	Urban	0.8773	0.8773	19340	Urban	0.8773
14460	Iroquois County, Illinois	14	Rural	0.8340	0.8339	99914	Rural	0.8340
14470	Jackson County, Illinois	14	Rural	0.8340	0.8339	99914	Rural	0.8340
14480	Jasper County, Illinois	14	Rural	0.8340	0.8339	99914	Rural	0.8340
14490	Jefferson County, Illinois	14	Rural	0.8340	0.8339	99914	Rural	0.8340
14500	Jersey County, Illinois	7040	Urban	0.9081	0.9076	41180	Urban	0.9079
14510	Jo Daviess County, Illinois	14	Rural	0.8340	0.8339	99914	Rural	0.8340
14520	Johnson County, Illinois	14	Rural	0.8340	0.8339	99914	Rural	0.8340
14530	Kane County, Illinois	1600	Urban	1.0851	1.0868	16974	Urban	1.0860
14540	Kankakee County, Illinois	3740	Urban	1.0603	1.0603	28100	Urban	1.0603
14550	Kendall County, Illinois	1600	Urban	1.0851	1.0868	16974	Urban	1.0860
14560	Knox County, Illinois	14	Rural	0.8340	0.8339	99914	Rural	0.8340
14570	Lake County, Illinois	1600	Urban	1.0851	1.0342	29404	Urban	1.0597
14580	La Salle County, Illinois	14	Rural	0.8340	0.8339	99914	Rural	0.8340
14590	Lawrence County, Illinois	14	Rural	0.8340	0.8339	99914	Rural	0.8340
14600	Lee County, Illinois	14	Rural	0.8340	0.8339	99914	Rural	0.8340
14610	Livingston County, Illinois	14	Rural	0.8340	0.8339	99914	Rural	0.8340
14620	Logan County, Illinois	14	Rural	0.8340	0.8339	99914	Rural	0.8340
14630	Mc Donough County, Illinois	14	Rural	0.8340	0.8339	99914	Rural	0.8340
14640	Mc Henry County, Illinois	1600	Urban	1.0851	1.0868	16974	Urban	1.0860
14650	Mclean County, Illinois	1040	Urban	0.9111	0.9111	14060	Urban	0.9111
14660	Macon County, Illinois	2040	Urban	0.8122	0.8122	19500	Urban	0.8122
14670	Macoupin County, Illinois	14	Rural	0.8340	0.9076	41180	Urban	0.8708
14680	Madison County, Illinois	7040	Urban	0.9081	0.9076	41180	Urban	0.9079
14690	Marion County, Illinois	14	Rural	0.8340	0.8339	99914	Rural	0.8340
14700	Marshall County, Illinois	14	Rural	0.8340	0.8886	37900	Urban	0.8613
14710	Mason County, Illinois	14	Rural	0.8340	0.8339	99914	Rural	0.8340
14720	Massac County, Illinois	14	Rural	0.8340	0.8339	99914	Rural	0.8340
14730	Menard County, Illinois	7880	Urban	0.8738	0.8738	44100	Urban	0.8738
14740	Mercer County, Illinois	14	Rural	0.8340	0.8773	19340	Urban	0.8557
14750	Monroe County, Illinois	7040	Urban	0.9081	0.9076	41180	Urban	0.9079
14760	Montgomery County, Illinois	14	Rural	0.8340	0.8339	99914	Rural	0.8340
14770	Morgan County, Illinois	14	Rural	0.8340	0.8339	99914	Rural	0.8340
14780	Moultrie County, Illinois	14	Rural	0.8340	0.8339	99914	Rural	0.8340
14790	Ogle County, Illinois	6880	Urban	0.9626	0.8339	99914	Rural	0.8983
14800	Peoria County, Illinois	6120	Urban	0.8886	0.8886	37900	Urban	0.8886
14810	Perry County, Illinois	14	Rural	0.8340	0.8339	99914	Rural	0.8340

TABLE 1.—FY 2006 IRF PPS TRANSITION WAGE INDEX TABLE—Continued

[For discharges occurring on or after October 1, 2005 and on or before September 30, 2006]

SSA state/ county code	County name	MSA No.	MSA urban/ rural	2006 MSA-based WI	2006 CBSA-based WI	CBSA No.	CBSA urban/ rural	Transition wage index *
14820	Piatt County, Illinois	14	Rural	0.8340	0.9527	16580	Urban	0.8934
14830	Pike County, Illinois	14	Rural	0.8340	0.8339	99914	Rural	0.8340
14831	Pope County, Illinois	14	Rural	0.8340	0.8339	99914	Rural	0.8340
14850	Pulaski County, Illinois	14	Rural	0.8340	0.8339	99914	Rural	0.8340
14860	Putnam County, Illinois	14	Rural	0.8340	0.8339	99914	Rural	0.8340
14870	Randolph County, Illinois	14	Rural	0.8340	0.8339	99914	Rural	0.8340
14880	Richland County, Illinois	14	Rural	0.8340	0.8339	99914	Rural	0.8340
14890	Rock Island County, Illinois	1960	Urban	0.8773	0.8773	19340	Urban	0.8773
14900	St Clair County, Illinois	7040	Urban	0.9081	0.9076	41180	Urban	0.9079
14910	Saline County, Illinois	14	Rural	0.8340	0.8339	99914	Rural	0.8340
14920	Sangamon County, Illinois	7880	Urban	0.8738	0.8738	44100	Urban	0.8738
14921	Schuyler County, Illinois	14	Rural	0.8340	0.8339	99914	Rural	0.8340
14940	Scott County, Illinois	14	Rural	0.8340	0.8339	99914	Rural	0.8340
14950	Shelby County, Illinois	14	Rural	0.8340	0.8339	99914	Rural	0.8340
14960	Stark County, Illinois	14	Rural	0.8340	0.8886	37900	Urban	0.8613
14970	Stephenson County, Illinois	14	Rural	0.8340	0.8339	99914	Rural	0.8340
14980	Tazewell County, Illinois	6120	Urban	0.8886	0.8886	37900	Urban	0.8886
14981	Union County, Illinois	14	Rural	0.8340	0.8339	99914	Rural	0.8340
14982	Vermilion County, Illinois	14	Rural	0.8340	0.8392	19180	Urban	0.8366
14983	Wabash County, Illinois	14	Rural	0.8340	0.8339	99914	Rural	0.8340
14984	Warren County, Illinois	14	Rural	0.8340	0.8339	99914	Rural	0.8340
14985	Washington County, Illinois	14	Rural	0.8340	0.8339	99914	Rural	0.8340
14986	Wayne County, Illinois	14	Rural	0.8340	0.8339	99914	Rural	0.8340
14987	White County, Illinois	14	Rural	0.8340	0.8339	99914	Rural	0.8340
14988	Whiteside County, Illinois	14	Rural	0.8340	0.8339	99914	Rural	0.8340
14989	Will County, Illinois	1600	Urban	1.0851	1.0868	16974	Urban	1.0860
14990	Williamson County, Illinois	14	Rural	0.8340	0.8339	99914	Rural	0.8340
14991	Winnebago County, Illinois	6880	Urban	0.9626	0.9626	40420	Urban	0.9626
14992	Woodford County, Illinois	6120	Urban	0.8886	0.8886	37900	Urban	0.8886
15000	Adams County, Indiana	2760	Urban	0.9737	0.8653	99915	Rural	0.9195
15010	Allen County, Indiana	2760	Urban	0.9737	0.9807	23060	Urban	0.9772
15020	Bartholomew County, Indiana	15	Rural	0.8736	0.9388	18020	Urban	0.9062
15030	Benton County, Indiana	15	Rural	0.8736	0.9067	29140	Urban	0.8902
15040	Blackford County, Indiana	15	Rural	0.8736	0.8653	99915	Rural	0.8695
15050	Boone County, Indiana	3480	Urban	1.0039	1.0113	26900	Urban	1.0076
15060	Brown County, Indiana	15	Rural	0.8736	1.0113	26900	Urban	0.9425
15070	Carroll County, Indiana	15	Rural	0.8736	0.9067	29140	Urban	0.8902
15080	Cass County, Indiana	15	Rural	0.8736	0.8653	99915	Rural	0.8695
15090	Clark County, Indiana	4520	Urban	0.9162	0.9122	31140	Urban	0.9142
15100	Clay County, Indiana	8320	Urban	0.8582	0.8517	45460	Urban	0.8550
15110	Clinton County, Indiana	3920	Urban	0.9067	0.8653	99915	Rural	0.8860
15120	Crawford County, Indiana	15	Rural	0.8736	0.8653	99915	Rural	0.8695
15130	Daviess County, Indiana	15	Rural	0.8736	0.8653	99915	Rural	0.8695
15140	Dearborn County, Indiana	11640	Urban	0.9595	0.9516	17140	Urban	0.9556
15150	Decatur County, Indiana	15	Rural	0.8736	0.8653	99915	Rural	0.8695
15160	De Kalb County, Indiana	2760	Urban	0.9737	0.8653	99915	Rural	0.9195
15170	Delaware County, Indiana	5280	Urban	0.8580	0.8580	34620	Urban	0.8580
15180	Dubois County, Indiana	15	Rural	0.8736	0.8653	99915	Rural	0.8695
15190	Elkhart County, Indiana	2330	Urban	0.9278	0.9278	21140	Urban	0.9278
15200	Fayette County, Indiana	15	Rural	0.8736	0.8653	99915	Rural	0.8695
15210	Floyd County, Indiana	4520	Urban	0.9162	0.9122	31140	Urban	0.9142
15220	Fountain County, Indiana	15	Rural	0.8736	0.8653	99915	Rural	0.8695
15230	Franklin County, Indiana	15	Rural	0.8736	0.9516	17140	Urban	0.9126
15240	Fulton County, Indiana	15	Rural	0.8736	0.8653	99915	Rural	0.8695
15250	Gibson County, Indiana	15	Rural	0.8736	0.8372	21780	Urban	0.8554
15260	Grant County, Indiana	15	Rural	0.8736	0.8653	99915	Rural	0.8695
15270	Greene County, Indiana	15	Rural	0.8736	0.8587	14020	Urban	0.8662
15280	Hamilton County, Indiana	3480	Urban	1.0039	1.0113	26900	Urban	1.0076
15290	Hancock County, Indiana	3480	Urban	1.0039	1.0113	26900	Urban	1.0076
15300	Harrison County, Indiana	4520	Urban	0.9162	0.9122	31140	Urban	0.9142
15310	Hendricks County, Indiana	3480	Urban	1.0039	1.0113	0126900	Urban	1.0076
15320	Henry County, Indiana	15	Rural	0.8736	0.8653	99915	Rural	0.8695
15330	Howard County, Indiana	3850	Urban	0.8986	0.8986	29020	Urban	0.8986
15340	Huntington County, Indiana	2760	Urban	0.9737	0.8653	99915	Rural	0.9195
15350	Jackson County, Indiana	15	Rural	0.8736	0.8653	99915	Rural	0.8695
15360	Jasper County, Indiana	15	Rural	0.8736	0.9310	23844	Urban	0.9023
15370	Jay County, Indiana	15	Rural	0.8736	0.8653	99915	Rural	0.8695
15380	Jefferson County, Indiana	15	Rural	0.8736	0.8653	99915	Rural	0.8695

TABLE 1.—FY 2006 IRF PPS TRANSITION WAGE INDEX TABLE—Continued

[For discharges occurring on or after October 1, 2005 and on or before September 30, 2006]

SSA state/ county code	County name	MSA No.	MSA urban/ rural	2006 MSA-based WI	2006 CBSA-based WI	CBSA No.	CBSA urban/ rural	Transition wage index *
15390	Jennings County, Indiana	15	Rural	0.8736	0.8653	99915	Rural	0.8695
15400	Johnson County, Indiana	3480	Urban	1.0039	1.0113	26900	Urban	1.0076
15410	Knox County, Indiana	15	Rural	0.8736	0.8653	99915	Rural	0.8695
15420	Kosciusko County, Indiana	15	Rural	0.8736	0.8653	99915	Rural	0.8695
15430	Lagrange County, Indiana	15	Rural	0.8736	0.8653	99915	Rural	0.8695
15440	Lake County, Indiana	2960	Urban	0.9342	0.9310	23844	Urban	0.9326
15450	La Porte County, Indiana	15	Rural	0.8736	0.9332	33140	Urban	0.9034
15460	Lawrence County, Indiana	15	Rural	0.8736	0.8653	99915	Rural	0.8695
15470	Madison County, Indiana	3480	Urban	1.0039	0.8713	11300	Urban	0.9376
15480	Marion County, Indiana	3480	Urban	1.0039	1.0113	26900	Urban	1.0076
15490	Marshall County, Indiana	15	Rural	0.8736	0.8653	99915	Rural	0.8695
15500	Martin County, Indiana	15	Rural	0.8736	0.8653	99915	Rural	0.8695
15510	Miami County, Indiana	15	Rural	0.8736	0.8653	99915	Rural	0.8695
15520	Monroe County, Indiana	1020	Urban	0.8587	0.8587	14020	Urban	0.8587
15530	Montgomery County, Indiana	15	Rural	0.8736	0.8653	99915	Rural	0.8695
15540	Morgan County, Indiana	3480	Urban	1.0039	1.0113	26900	Urban	1.0076
15550	Newton County, Indiana	15	Rural	0.8736	0.9310	23844	Urban	0.9023
15560	Noble County, Indiana	15	Rural	0.8736	0.8653	99915	Rural	0.8695
15570	Ohio County, Indiana	1640	Urban	0.9595	0.9516	17140	Urban	0.9556
15580	Orange County, Indiana	15	Rural	0.8736	0.8653	99915	Rural	0.8695
15590	Owen County, Indiana	15	Rural	0.8736	0.8587	14020	Urban	0.8662
15600	Parke County, Indiana	15	Rural	0.8736	0.8653	99915	Rural	0.8695
15610	Perry County, Indiana	15	Rural	0.8736	0.8653	99915	Rural	0.8695
15620	Pike County, Indiana	15	Rural	0.8736	0.8653	99915	Rural	0.8695
15630	Porter County, Indiana	2960	Urban	0.9342	0.9310	23844	Urban	0.9326
15640	Posey County, Indiana	2440	Urban	0.8395	0.8372	21780	Urban	0.8384
15650	Pulaski County, Indiana	15	Rural	0.8736	0.8653	99915	Rural	0.8695
15660	Putnam County, Indiana	15	Rural	0.8736	1.0113	26900	Urban	0.9425
15670	Randolph County, Indiana	15	Rural	0.8736	0.8653	99915	Rural	0.8695
15680	Ripley County, Indiana	15	Rural	0.8736	0.8653	99915	Rural	0.8695
15690	Rush County, Indiana	15	Rural	0.8736	0.8653	99915	Rural	0.8695
15700	St Joseph County, Indiana	7800	Urban	0.9447	0.9447	43780	Urban	0.9447
15710	Scott County, Indiana	4520	Urban	0.9162	0.8653	99915	Rural	0.8908
15720	Shelby County, Indiana	3480	Urban	1.0039	1.0113	26900	Urban	1.0076
15730	Spencer County, Indiana	15	Rural	0.8736	0.8653	99915	Rural	0.8695
15740	Starke County, Indiana	15	Rural	0.8736	0.8653	99915	Rural	0.8695
15750	Steuben County, Indiana	15	Rural	0.8736	0.8653	99915	Rural	0.8695
15760	Sullivan County, Indiana	15	Rural	0.8736	0.8517	45460	Urban	0.8627
15770	Switzerland County, Indiana	15	Rural	0.8736	0.8653	99915	Rural	0.8695
15780	Tippecanoe County, Indiana	3920	Urban	0.9067	0.9067	29140	Urban	0.9067
15790	Tipton County, Indiana	3850	Urban	0.8986	0.8986	29020	Urban	0.8986
15800	Union County, Indiana	15	Rural	0.8736	0.8653	99915	Rural	0.8695
15810	Vanderburgh County, Indiana	2440	Urban	0.8395	0.8372	21780	Urban	0.8384
15820	Vermillion County, Indiana	8320	Urban	0.8582	0.8517	45460	Urban	0.8550
15830	Vigo County, Indiana	8320	Urban	0.8582	0.8517	45460	Urban	0.8550
15840	Wabash County, Indiana	15	Rural	0.8736	0.8653	99915	Rural	0.8695
15850	Warren County, Indiana	15	Rural	0.8736	0.8653	99915	Rural	0.8695
15860	Warrick County, Indiana	2440	Urban	0.8395	0.8372	21780	Urban	0.8384
15870	Washington County, Indiana	15	Rural	0.8736	0.9122	31140	Urban	0.8929
15880	Wayne County, Indiana	15	Rural	0.8736	0.8653	99915	Rural	0.8695
15890	Wells County, Indiana	2760	Urban	0.9737	0.9807	23060	Urban	0.9772
15900	White County, Indiana	15	Rural	0.8736	0.8653	99915	Rural	0.8695
15910	Whitley County, Indiana	2760	Urban	0.9737	0.9807	23060	Urban	0.9772
16000	Adair County, Iowa	16	Rural	0.8550	0.8475	99916	Rural	0.8513
16010	Adams County, Iowa	16	Rural	0.8550	0.8475	99916	Rural	0.8513
16020	Allamakee County, Iowa	16	Rural	0.8550	0.8475	99916	Rural	0.8513
16030	Appanoose County, Iowa	16	Rural	0.8550	0.8475	99916	Rural	0.8513
16040	Audubon County, Iowa	16	Rural	0.8550	0.8475	99916	Rural	0.8513
16050	Benton County, Iowa	16	Rural	0.8550	0.8975	16300	Urban	0.8763
16060	Black Hawk County, Iowa	8920	Urban	0.8633	0.8633	47940	Urban	0.8633
16070	Boone County, Iowa	16	Rural	0.8550	0.8475	99916	Rural	0.8513
16080	Bremer County, Iowa	16	Rural	0.8550	0.8633	47940	Urban	0.8592
16090	Buchanan County, Iowa	16	Rural	0.8550	0.8475	99916	Rural	0.8513
16100	Buena Vista County, Iowa	16	Rural	0.8550	0.8475	99916	Rural	0.8513
16110	Butler County, Iowa	16	Rural	0.8550	0.8475	99916	Rural	0.8513
16120	Calhoun County, Iowa	16	Rural	0.8550	0.8475	99916	Rural	0.8513
16130	Carroll County, Iowa	16	Rural	0.8550	0.8475	99916	Rural	0.8513
16140	Cass County, Iowa	16	Rural	0.8550	0.8475	99916	Rural	0.8513

TABLE 1.—FY 2006 IRF PPS TRANSITION WAGE INDEX TABLE—Continued

[For discharges occurring on or after October 1, 2005 and on or before September 30, 2006]

SSA state/ county code	County name	MSA No.	MSA urban/ rural	2006 MSA-based WI	2006 CBSA-based WI	CBSA No.	CBSA urban/ rural	Transition wage index *
16150	Cedar County, Iowa	16	Rural	0.8550	0.8475	99916	Rural	0.8513
16160	Cerro Gordo County, Iowa	16	Rural	0.8550	0.8475	99916	Rural	0.8513
16170	Cherokee County, Iowa	16	Rural	0.8550	0.8475	99916	Rural	0.8513
16180	Chickasaw County, Iowa	16	Rural	0.8550	0.8475	99916	Rural	0.8513
16190	Clarke County, Iowa	16	Rural	0.8550	0.8475	99916	Rural	0.8513
16200	Clay County, Iowa	16	Rural	0.8550	0.8475	99916	Rural	0.8513
16210	Clayton County, Iowa	16	Rural	0.8550	0.8475	99916	Rural	0.8513
16220	Clinton County, Iowa	16	Rural	0.8550	0.8475	99916	Rural	0.8513
16230	Crawford County, Iowa	16	Rural	0.8550	0.8475	99916	Rural	0.8513
16240	Dallas County, Iowa	2120	Urban	0.9266	0.9266	19780	Urban	0.9266
16250	Davis County, Iowa	16	Rural	0.8550	0.8475	99916	Rural	0.8513
16260	Decatur County, Iowa	16	Rural	0.8550	0.8475	99916	Rural	0.8513
16270	Delaware County, Iowa	16	Rural	0.8550	0.8475	99916	Rural	0.8513
16280	Des Moines County, Iowa	16	Rural	0.8550	0.8475	99916	Rural	0.8513
16290	Dickinson County, Iowa	16	Rural	0.8550	0.8475	99916	Rural	0.8513
16300	Dubuque County, Iowa	2200	Urban	0.8748	0.8748	20220	Urban	0.8748
16310	Emmet County, Iowa	16	Rural	0.8550	0.8475	99916	Rural	0.8513
16320	Fayette County, Iowa	16	Rural	0.8550	0.8475	99916	Rural	0.8513
16330	Floyd County, Iowa	16	Rural	0.8550	0.8475	99916	Rural	0.8513
16340	Franklin County, Iowa	16	Rural	0.8550	0.8475	99916	Rural	0.8513
16350	Fremont County, Iowa	16	Rural	0.8550	0.8475	99916	Rural	0.8513
16360	Greene County, Iowa	16	Rural	0.8550	0.8475	99916	Rural	0.8513
16370	Grundy County, Iowa	16	Rural	0.8550	0.8633	47940	Urban	0.8592
16380	Guthrie County, Iowa	16	Rural	0.8550	0.9266	19780	Urban	0.8908
16390	Hamilton County, Iowa	16	Rural	0.8550	0.8475	99916	Rural	0.8513
16400	Hancock County, Iowa	16	Rural	0.8550	0.8475	99916	Rural	0.8513
16410	Hardin County, Iowa	16	Rural	0.8550	0.8475	99916	Rural	0.8513
16420	Harrison County, Iowa	16	Rural	0.8550	0.9754	36540	Urban	0.9152
16430	Henry County, Iowa	16	Rural	0.8550	0.8475	99916	Rural	0.8513
16440	Howard County, Iowa	16	Rural	0.8550	0.8475	99916	Rural	0.8513
16450	Humboldt County, Iowa	16	Rural	0.8550	0.8475	99916	Rural	0.8513
16460	Ida County, Iowa	16	Rural	0.8550	0.8475	99916	Rural	0.8513
16470	Iowa County, Iowa	16	Rural	0.8550	0.8475	99916	Rural	0.8513
16480	Jackson County, Iowa	16	Rural	0.8550	0.8475	99916	Rural	0.8513
16490	Jasper County, Iowa	16	Rural	0.8550	0.8475	99916	Rural	0.8513
16500	Jefferson County, Iowa	16	Rural	0.8550	0.8475	99916	Rural	0.8513
16510	Johnson County, Iowa	3500	Urban	0.9654	0.9654	26980	Urban	0.9654
16520	Jones County, Iowa	16	Rural	0.8550	0.8975	16300	Urban	0.8763
16530	Keokuk County, Iowa	16	Rural	0.8550	0.8475	99916	Rural	0.8513
16540	Kossuth County, Iowa	16	Rural	0.8550	0.8475	99916	Rural	0.8513
16550	Lee County, Iowa	16	Rural	0.8550	0.8475	99916	Rural	0.8513
16560	Linn County, Iowa	1360	Urban	0.8975	0.8975	16300	Urban	0.8975
16570	Louisa County, Iowa	16	Rural	0.8550	0.8475	99916	Rural	0.8513
16580	Lucas County, Iowa	16	Rural	0.8550	0.8475	99916	Rural	0.8513
16590	Lyon County, Iowa	16	Rural	0.8550	0.8475	99916	Rural	0.8513
16600	Madison County, Iowa	16	Rural	0.8550	0.9266	19780	Urban	0.8908
16610	Mahaska County, Iowa	16	Rural	0.8550	0.8475	99916	Rural	0.8513
16620	Marion County, Iowa	16	Rural	0.8550	0.8475	99916	Rural	0.8513
16630	Marshall County, Iowa	16	Rural	0.8550	0.8475	99916	Rural	0.8513
16640	Mills County, Iowa	16	Rural	0.8550	0.9754	36540	Urban	0.9152
16650	Mitchell County, Iowa	16	Rural	0.8550	0.8475	99916	Rural	0.8513
16660	Monona County, Iowa	16	Rural	0.8550	0.8475	99916	Rural	0.8513
16670	Monroe County, Iowa	16	Rural	0.8550	0.8475	99916	Rural	0.8513
16680	Montgomery County, Iowa	16	Rural	0.8550	0.8475	99916	Rural	0.8513
16690	Muscatine County, Iowa	16	Rural	0.8550	0.8475	99916	Rural	0.8513
16700	OBrien County, Iowa	16	Rural	0.8550	0.8475	99916	Rural	0.8513
16710	Osceola County, Iowa	16	Rural	0.8550	0.8475	99916	Rural	0.8513
16720	Page County, Iowa	16	Rural	0.8550	0.8475	99916	Rural	0.8513
16730	Palo Alto County, Iowa	16	Rural	0.8550	0.8475	99916	Rural	0.8513
16740	Plymouth County, Iowa	16	Rural	0.8550	0.8475	99916	Rural	0.8513
16750	Pocahontas County, Iowa	16	Rural	0.8550	0.8475	99916	Rural	0.8513
16760	Polk County, Iowa	2120	Urban	0.9266	0.9266	19780	Urban	0.9266
16770	Pottawattamie County, Iowa	5920	Urban	0.9754	0.9754	36540	Urban	0.9754
16780	Poweshiek County, Iowa	16	Rural	0.8550	0.8475	99916	Rural	0.8513
16790	Ringgold County, Iowa	16	Rural	0.8550	0.8475	99916	Rural	0.8513
16800	Sac County, Iowa	16	Rural	0.8550	0.8475	99916	Rural	0.8513
16810	Scott County, Iowa	1960	Urban	0.8773	0.8773	19340	Urban	0.8773
16820	Shelby County, Iowa	16	Rural	0.8550	0.8475	99916	Rural	0.8513

TABLE 1.—FY 2006 IRF PPS TRANSITION WAGE INDEX TABLE—Continued

[For discharges occurring on or after October 1, 2005 and on or before September 30, 2006]

SSA state/ county code	County name	MSA No.	MSA urban/ rural	2006 MSA-based WI	2006 CBSA-based WI	CBSA No.	CBSA urban/ rural	Transition wage index *
16830	Sioux County, Iowa	16	Rural	0.8550	0.8475	99916	Rural	0.8513
16840	Story County, Iowa	16	Rural	0.8550	0.9479	11180	Urban	0.9015
16850	Tama County, Iowa	16	Rural	0.8550	0.8475	99916	Rural	0.8513
16860	Taylor County, Iowa	16	Rural	0.8550	0.8475	99916	Rural	0.8513
16870	Union County, Iowa	16	Rural	0.8550	0.8475	99916	Rural	0.8513
16880	Van Buren County, Iowa	16	Rural	0.8550	0.8475	99916	Rural	0.8513
16890	Wapello County, Iowa	16	Rural	0.8550	0.8475	99916	Rural	0.8513
16900	Warren County, Iowa	2120	Urban	0.9266	0.9266	19780	Urban	0.9266
16910	Washington County, Iowa	16	Rural	0.8550	0.9654	26980	Urban	0.9102
16920	Wayne County, Iowa	16	Rural	0.8550	0.8475	99916	Rural	0.8513
16930	Webster County, Iowa	16	Rural	0.8550	0.8475	99916	Rural	0.8513
16940	Winnebago County, Iowa	16	Rural	0.8550	0.8475	99916	Rural	0.8513
16950	Winneshiek County, Iowa	16	Rural	0.8550	0.8475	99916	Rural	0.8513
16960	Woodbury County, Iowa	7720	Urban	0.9094	0.9070	43580	Urban	0.9082
16970	Worth County, Iowa	16	Rural	0.8550	0.8475	99916	Rural	0.8513
16980	Wright County, Iowa	16	Rural	0.8550	0.8475	99916	Rural	0.8513
17000	Allen County, Kansas	17	Rural	0.8087	0.8079	99917	Rural	0.8083
17010	Anderson County, Kansas	17	Rural	0.8087	0.8079	99917	Rural	0.8083
17020	Atchison County, Kansas	17	Rural	0.8087	0.8079	99917	Rural	0.8083
17030	Barber County, Kansas	17	Rural	0.8087	0.8079	99917	Rural	0.8083
17040	Barton County, Kansas	17	Rural	0.8087	0.8079	99917	Rural	0.8083
17050	Bourbon County, Kansas	17	Rural	0.8087	0.8079	99917	Rural	0.8083
17060	Brown County, Kansas	17	Rural	0.8087	0.8079	99917	Rural	0.8083
17070	Butler County, Kansas	9040	Urban	0.9486	0.9457	48620	Urban	0.9472
17080	Chase County, Kansas	17	Rural	0.8087	0.8079	99917	Rural	0.8083
17090	Chautauqua County, Kansas	17	Rural	0.8087	0.8079	99917	Rural	0.8083
17100	Cherokee County, Kansas	17	Rural	0.8087	0.8079	99917	Rural	0.8083
17110	Cheyenne County, Kansas	17	Rural	0.8087	0.8079	99917	Rural	0.8083
17120	Clark County, Kansas	17	Rural	0.8087	0.8079	99917	Rural	0.8083
17130	Clay County, Kansas	17	Rural	0.8087	0.8079	99917	Rural	0.8083
17140	Cloud County, Kansas	17	Rural	0.8087	0.8079	99917	Rural	0.8083
17150	Coffey County, Kansas	17	Rural	0.8087	0.8079	99917	Rural	0.8083
17160	Comanche County, Kansas	17	Rural	0.8087	0.8079	99917	Rural	0.8083
17170	Cowley County, Kansas	17	Rural	0.8087	0.8079	99917	Rural	0.8083
17180	Crawford County, Kansas	17	Rural	0.8087	0.8079	99917	Rural	0.8083
17190	Decatur County, Kansas	17	Rural	0.8087	0.8079	99917	Rural	0.8083
17200	Dickinson County, Kansas	17	Rural	0.8087	0.8079	99917	Rural	0.8083
17210	Doniphan County, Kansas	17	Rural	0.8087	1.0013	41140	Urban	0.9050
17220	Douglas County, Kansas	4150	Urban	0.8644	0.8644	29940	Urban	0.8644
17230	Edwards County, Kansas	17	Rural	0.8087	0.8079	99917	Rural	0.8083
17240	Elk County, Kansas	17	Rural	0.8087	0.8079	99917	Rural	0.8083
17250	Ellis County, Kansas	17	Rural	0.8087	0.8079	99917	Rural	0.8083
17260	Ellsworth County, Kansas	17	Rural	0.8087	0.8079	99917	Rural	0.8083
17270	Finney County, Kansas	17	Rural	0.8087	0.8079	99917	Rural	0.8083
17280	Ford County, Kansas	17	Rural	0.8087	0.8079	99917	Rural	0.8083
17290	Franklin County, Kansas	17	Rural	0.8087	0.9629	28140	Urban	0.8858
17300	Geary County, Kansas	17	Rural	0.8087	0.8079	99917	Rural	0.8083
17310	Gove County, Kansas	17	Rural	0.8087	0.8079	99917	Rural	0.8083
17320	Graham County, Kansas	17	Rural	0.8087	0.8079	99917	Rural	0.8083
17330	Grant County, Kansas	17	Rural	0.8087	0.8079	99917	Rural	0.8083
17340	Gray County, Kansas	17	Rural	0.8087	0.8079	99917	Rural	0.8083
17350	Greeley County, Kansas	17	Rural	0.8087	0.8079	99917	Rural	0.8083
17360	Greenwood County, Kansas	17	Rural	0.8087	0.8079	99917	Rural	0.8083
17370	Hamilton County, Kansas	17	Rural	0.8087	0.8079	99917	Rural	0.8083
17380	Harper County, Kansas	17	Rural	0.8087	0.8079	99917	Rural	0.8083
17390	Harvey County, Kansas	9040	Urban	0.9486	0.9457	48620	Urban	0.9472
17391	Haskell County, Kansas	17	Rural	0.8087	0.8079	99917	Rural	0.8083
17410	Hodgeman County, Kansas	17	Rural	0.8087	0.8079	99917	Rural	0.8083
17420	Jackson County, Kansas	17	Rural	0.8087	0.8904	45820	Urban	0.8496
17430	Jefferson County, Kansas	17	Rural	0.8087	0.8904	45820	Urban	0.8496
17440	Jewell County, Kansas	17	Rural	0.8087	0.8079	99917	Rural	0.8083
17450	Johnson County, Kansas	3760	Urban	0.9641	0.9629	28140	Urban	0.9635
17451	Kearny County, Kansas	17	Rural	0.8087	0.8079	99917	Rural	0.8083
17470	Kingman County, Kansas	17	Rural	0.8087	0.8079	99917	Rural	0.8083
17480	Kiowa County, Kansas	17	Rural	0.8087	0.8079	99917	Rural	0.8083
17490	Labette County, Kansas	17	Rural	0.8087	0.8079	99917	Rural	0.8083
17500	Lane County, Kansas	17	Rural	0.8087	0.8079	99917	Rural	0.8083
17510	Leavenworth County, Kansas	3760	Urban	0.9641	0.9629	28140	Urban	0.9635

TABLE 1.—FY 2006 IRF PPS TRANSITION WAGE INDEX TABLE—Continued

[For discharges occurring on or after October 1, 2005 and on or before September 30, 2006]

SSA state/ county code	County name	MSA No.	MSA urban/ rural	2006 MSA-based WI	2006 CBSA-based WI	CBSA No.	CBSA urban/ rural	Transition wage index *
17520	Lincoln County, Kansas	17	Rural	0.8087	0.8079	99917	Rural	0.8083
17530	Linn County, Kansas	17	Rural	0.8087	0.9629	28140	Urban	0.8858
17540	Logan County, Kansas	17	Rural	0.8087	0.8079	99917	Rural	0.8083
17550	Lyon County, Kansas	17	Rural	0.8087	0.8079	99917	Rural	0.8083
17560	Mc Pherson County, Kansas	17	Rural	0.8087	0.8079	99917	Rural	0.8083
17570	Marion County, Kansas	17	Rural	0.8087	0.8079	99917	Rural	0.8083
17580	Marshall County, Kansas	17	Rural	0.8087	0.8079	99917	Rural	0.8083
17590	Meade County, Kansas	17	Rural	0.8087	0.8079	99917	Rural	0.8083
17600	Miami County, Kansas	3760	Urban	0.9641	0.9629	28140	Urban	0.9635
17610	Mitchell County, Kansas	17	Rural	0.8087	0.8079	99917	Rural	0.8083
17620	Montgomery County, Kansas	17	Rural	0.8087	0.8079	99917	Rural	0.8083
17630	Morris County, Kansas	17	Rural	0.8087	0.8079	99917	Rural	0.8083
17640	Morton County, Kansas	17	Rural	0.8087	0.8079	99917	Rural	0.8083
17650	Nemaha County, Kansas	17	Rural	0.8087	0.8079	99917	Rural	0.8083
17660	Neosho County, Kansas	17	Rural	0.8087	0.8079	99917	Rural	0.8083
17670	Ness County, Kansas	17	Rural	0.8087	0.8079	99917	Rural	0.8083
17680	Norton County, Kansas	17	Rural	0.8087	0.8079	99917	Rural	0.8083
17690	Osage County, Kansas	17	Rural	0.8087	0.8904	45820	Urban	0.8496
17700	Osborne County, Kansas	17	Rural	0.8087	0.8079	99917	Rural	0.8083
17710	Ottawa County, Kansas	17	Rural	0.8087	0.8079	99917	Rural	0.8083
17720	Pawnee County, Kansas	17	Rural	0.8087	0.8079	99917	Rural	0.8083
17730	Phillips County, Kansas	17	Rural	0.8087	0.8079	99917	Rural	0.8083
17740	Pottawatomie County, Kansas	17	Rural	0.8087	0.8079	99917	Rural	0.8083
17750	Pratt County, Kansas	17	Rural	0.8087	0.8079	99917	Rural	0.8083
17760	Rawlins County, Kansas	17	Rural	0.8087	0.8079	99917	Rural	0.8083
17770	Reno County, Kansas	17	Rural	0.8087	0.8079	99917	Rural	0.8083
17780	Republic County, Kansas	17	Rural	0.8087	0.8079	99917	Rural	0.8083
17790	Rice County, Kansas	17	Rural	0.8087	0.8079	99917	Rural	0.8083
17800	Riley County, Kansas	17	Rural	0.8087	0.8079	99917	Rural	0.8083
17810	Rooks County, Kansas	17	Rural	0.8087	0.8079	99917	Rural	0.8083
17820	Rush County, Kansas	17	Rural	0.8087	0.8079	99917	Rural	0.8083
17830	Russell County, Kansas	17	Rural	0.8087	0.8079	99917	Rural	0.8083
17840	Saline County, Kansas	17	Rural	0.8087	0.8079	99917	Rural	0.8083
17841	Scott County, Kansas	17	Rural	0.8087	0.8079	99917	Rural	0.8083
17860	Sedgwick County, Kansas	9040	Urban	0.9486	0.9457	48620	Urban	0.9472
17870	Seward County, Kansas	17	Rural	0.8087	0.8079	99917	Rural	0.8083
17880	Shawnee County, Kansas	8440	Urban	0.8904	0.8904	45820	Urban	0.8904
17890	Sheridan County, Kansas	17	Rural	0.8087	0.8079	99917	Rural	0.8083
17900	Sherman County, Kansas	17	Rural	0.8087	0.8079	99917	Rural	0.8083
17910	Smith County, Kansas	17	Rural	0.8087	0.8079	99917	Rural	0.8083
17920	Stafford County, Kansas	17	Rural	0.8087	0.8079	99917	Rural	0.8083
17921	Stanton County, Kansas	17	Rural	0.8087	0.8079	99917	Rural	0.8083
17940	Stevens County, Kansas	17	Rural	0.8087	0.8079	99917	Rural	0.8083
17950	Sumner County, Kansas	17	Rural	0.8087	0.9457	48620	Urban	0.8772
17960	Thomas County, Kansas	17	Rural	0.8087	0.8079	99917	Rural	0.8083
17970	Trego County, Kansas	17	Rural	0.8087	0.8079	99917	Rural	0.8083
17980	Wabaunsee County, Kansas	17	Rural	0.8087	0.8904	45820	Urban	0.8496
17981	Wallace County, Kansas	17	Rural	0.8087	0.8079	99917	Rural	0.8083
17982	Washington County, Kansas	17	Rural	0.8087	0.8079	99917	Rural	0.8083
17983	Wichita County, Kansas	17	Rural	0.8087	0.8079	99917	Rural	0.8083
17984	Wilson County, Kansas	17	Rural	0.8087	0.8079	99917	Rural	0.8083
17985	Woodson County, Kansas	17	Rural	0.8087	0.8079	99917	Rural	0.8083
17986	Wyandotte County, Kansas	3760	Urban	0.9641	0.9629	28140	Urban	0.9635
18000	Adair County, Kentucky	18	Rural	0.7844	0.7755	99918	Rural	0.7800
18010	Allen County, Kentucky	18	Rural	0.7844	0.7755	99918	Rural	0.7800
18020	Anderson County, Kentucky	18	Rural	0.7844	0.7755	99918	Rural	0.7800
18030	Ballard County, Kentucky	18	Rural	0.7844	0.7755	99918	Rural	0.7800
18040	Barren County, Kentucky	18	Rural	0.7844	0.7755	99918	Rural	0.7800
18050	Bath County, Kentucky	18	Rural	0.7844	0.7755	99918	Rural	0.7800
18060	Bell County, Kentucky	18	Rural	0.7844	0.7755	99918	Rural	0.7800
18070	Boone County, Kentucky	1640	Urban	0.9595	0.9516	17140	Urban	0.9556
18080	Bourbon County, Kentucky	4280	Urban	0.9219	0.9359	30460	Urban	0.9289
18090	Boyd County, Kentucky	13400	Urban	0.9564	0.9564	26580	Urban	0.9564
18100	Boyle County, Kentucky	18	Rural	0.7844	0.7755	99918	Rural	0.7800
18110	Bracken County, Kentucky	18	Rural	0.7844	0.9516	17140	Urban	0.8680
18120	Breathitt County, Kentucky	18	Rural	0.7844	0.7755	99918	Rural	0.7800
18130	Breckinridge County, Kentucky	18	Rural	0.7844	0.7755	99918	Rural	0.7800
18140	Bullitt County, Kentucky	4520	Urban	0.9162	0.9122	31140	Urban	0.9142

TABLE 1.—FY 2006 IRF PPS TRANSITION WAGE INDEX TABLE—Continued

[For discharges occurring on or after October 1, 2005 and on or before September 30, 2006]

SSA state/ county code	County name	MSA No.	MSA urban/ rural	2006 MSA-based WI	2006 CBSA-based WI	CBSA No.	CBSA urban/ rural	Transition wage index *
18150	Butler County, Kentucky	18	Rural	0.7844	0.7755	99918	Rural	0.7800
18160	Caldwell County, Kentucky	18	Rural	0.7844	0.7755	99918	Rural	0.7800
18170	Calloway County, Kentucky	18	Rural	0.7844	0.7755	99918	Rural	0.7800
18180	Campbell County, Kentucky	1640	Urban	0.9595	0.9516	17140	Urban	0.9556
18190	Carlisle County, Kentucky	18	Rural	0.7844	0.7755	99918	Rural	0.7800
18191	Carroll County, Kentucky	18	Rural	0.7844	0.7755	99918	Rural	0.7800
18210	Carter County, Kentucky	3400	Urban	0.9564	0.7755	99918	Rural	0.8660
18220	Casey County, Kentucky	18	Rural	0.7844	0.7755	99918	Rural	0.7800
18230	Christian County, Kentucky	1660	Urban	0.8022	0.8022	17300	Urban	0.8022
18240	Clark County, Kentucky	4280	Urban	0.9219	0.9359	30460	Urban	0.9289
18250	Clay County, Kentucky	18	Rural	0.7844	0.7755	99918	Rural	0.7800
18260	Clinton County, Kentucky	18	Rural	0.7844	0.7755	99918	Rural	0.7800
18270	Crittenden County, Kentucky	18	Rural	0.7844	0.7755	99918	Rural	0.7800
18271	Cumberland County, Kentucky	18	Rural	0.7844	0.7755	99918	Rural	0.7800
18290	Daviess County, Kentucky	5990	Urban	0.8434	0.8434	36980	Urban	0.8434
18291	Edmonson County, Kentucky	18	Rural	0.7844	0.8140	14540	Urban	0.7992
18310	Elliott County, Kentucky	18	Rural	0.7844	0.7755	99918	Rural	0.7800
18320	Estill County, Kentucky	18	Rural	0.7844	0.7755	99918	Rural	0.7800
18330	Fayette County, Kentucky	4280	Urban	0.9219	0.9359	30460	Urban	0.9289
18340	Fleming County, Kentucky	18	Rural	0.7844	0.7755	99918	Rural	0.7800
18350	Floyd County, Kentucky	18	Rural	0.7844	0.7755	99918	Rural	0.7800
18360	Franklin County, Kentucky	18	Rural	0.7844	0.7755	99918	Rural	0.7800
18361	Fulton County, Kentucky	18	Rural	0.7844	0.7755	99918	Rural	0.7800
18362	Gallatin County, Kentucky	1640	Urban	0.9595	0.9516	17140	Urban	0.9556
18390	Garrard County, Kentucky	18	Rural	0.7844	0.7755	99918	Rural	0.7800
18400	Grant County, Kentucky	1640	Urban	0.9595	0.9516	17140	Urban	0.9556
18410	Graves County, Kentucky	18	Rural	0.7844	0.7755	99918	Rural	0.7800
18420	Grayson County, Kentucky	18	Rural	0.7844	0.7755	99918	Rural	0.7800
18421	Green County, Kentucky	18	Rural	0.7844	0.7755	99918	Rural	0.7800
18440	Greenup County, Kentucky	3400	Urban	0.9564	0.9564	26580	Urban	0.9564
18450	Hancock County, Kentucky	18	Rural	0.7844	0.8434	36980	Urban	0.8139
18460	Hardin County, Kentucky	18	Rural	0.7844	0.8684	21060	Urban	0.8264
18470	Harlan County, Kentucky	18	Rural	0.7844	0.7755	99918	Rural	0.7800
18480	Harrison County, Kentucky	18	Rural	0.7844	0.7755	99918	Rural	0.7800
18490	Hart County, Kentucky	18	Rural	0.7844	0.7755	99918	Rural	0.7800
18500	Henderson County, Kentucky	2440	Urban	0.8395	0.8372	21780	Urban	0.8384
18510	Henry County, Kentucky	18	Rural	0.7844	0.9122	31140	Urban	0.8483
18511	Hickman County, Kentucky	18	Rural	0.7844	0.7755	99918	Rural	0.7800
18530	Hopkins County, Kentucky	18	Rural	0.7844	0.7755	99918	Rural	0.7800
18540	Jackson County, Kentucky	18	Rural	0.7844	0.7755	99918	Rural	0.7800
18550	Jefferson County, Kentucky	4520	Urban	0.9162	0.9122	31140	Urban	0.9142
18560	Jessamine County, Kentucky	4280	Urban	0.9219	0.9359	30460	Urban	0.9289
18570	Johnson County, Kentucky	18	Rural	0.7844	0.7755	99918	Rural	0.7800
18580	Kenton County, Kentucky	1640	Urban	0.9595	0.9516	17140	Urban	0.9556
18590	Knott County, Kentucky	18	Rural	0.7844	0.7755	99918	Rural	0.7800
18600	Knox County, Kentucky	18	Rural	0.7844	0.7755	99918	Rural	0.7800
18610	Larue County, Kentucky	18	Rural	0.7844	0.8684	21060	Urban	0.8264
18620	Laurel County, Kentucky	18	Rural	0.7844	0.7755	99918	Rural	0.7800
18630	Lawrence County, Kentucky	18	Rural	0.7844	0.7755	99918	Rural	0.7800
18640	Lee County, Kentucky	18	Rural	0.7844	0.7755	99918	Rural	0.7800
18650	Leslie County, Kentucky	18	Rural	0.7844	0.7755	99918	Rural	0.7800
18660	Letcher County, Kentucky	18	Rural	0.7844	0.7755	99918	Rural	0.7800
18670	Lewis County, Kentucky	18	Rural	0.7844	0.7755	99918	Rural	0.7800
18680	Lincoln County, Kentucky	18	Rural	0.7844	0.7755	99918	Rural	0.7800
18690	Livingston County, Kentucky	18	Rural	0.7844	0.7755	99918	Rural	0.7800
18700	Logan County, Kentucky	18	Rural	0.7844	0.7755	99918	Rural	0.7800
18710	Lyon County, Kentucky	18	Rural	0.7844	0.7755	99918	Rural	0.7800
18720	Mc Cracken County, Kentucky	18	Rural	0.7844	0.7755	99918	Rural	0.7800
18730	Mc Creary County, Kentucky	18	Rural	0.7844	0.7755	99918	Rural	0.7800
18740	Mc Lean County, Kentucky	18	Rural	0.7844	0.8434	36980	Urban	0.8139
18750	Madison County, Kentucky	4280	Urban	0.9219	0.7755	99918	Rural	0.8487
18760	Magoffin County, Kentucky	18	Rural	0.7844	0.7755	99918	Rural	0.7800
18770	Marion County, Kentucky	18	Rural	0.7844	0.7755	99918	Rural	0.7800
18780	Marshall County, Kentucky	18	Rural	0.7844	0.7755	99918	Rural	0.7800
18790	Martin County, Kentucky	18	Rural	0.7844	0.7755	99918	Rural	0.7800
18800	Mason County, Kentucky	18	Rural	0.7844	0.7755	99918	Rural	0.7800
18801	Meade County, Kentucky	18	Rural	0.7844	0.9122	31140	Urban	0.8483
18802	Menifee County, Kentucky	18	Rural	0.7844	0.7755	99918	Rural	0.7800

TABLE 1.—FY 2006 IRF PPS TRANSITION WAGE INDEX TABLE—Continued

[For discharges occurring on or after October 1, 2005 and on or before September 30, 2006]

SSA state/ county code	County name	MSA No.	MSA urban/ rural	2006 MSA-based WI	2006 CBSA-based WI	CBSA No.	CBSA urban/ rural	Transition wage index *
18830	Mercer County, Kentucky	18	Rural	0.7844	0.7755	99918	Rural	0.7800
18831	Metcalfe County, Kentucky	18	Rural	0.7844	0.7755	99918	Rural	0.7800
18850	Monroe County, Kentucky	18	Rural	0.7844	0.7755	99918	Rural	0.7800
18860	Montgomery County, Kentucky	18	Rural	0.7844	0.7755	99918	Rural	0.7800
18861	Morgan County, Kentucky	18	Rural	0.7844	0.7755	99918	Rural	0.7800
18880	Muhlenberg County, Kentucky	18	Rural	0.7844	0.7755	99918	Rural	0.7800
18890	Nelson County, Kentucky	18	Rural	0.7844	0.9122	31140	Urban	0.8483
18900	Nicholas County, Kentucky	18	Rural	0.7844	0.7755	99918	Rural	0.7800
18910	Ohio County, Kentucky	18	Rural	0.7844	0.7755	99918	Rural	0.7800
18920	Oldham County, Kentucky	4520	Urban	0.9162	0.9122	31140	Urban	0.9142
18930	Owen County, Kentucky	18	Rural	0.7844	0.7755	99918	Rural	0.7800
18931	Owsley County, Kentucky	18	Rural	0.7844	0.7755	99918	Rural	0.7800
18932	Pendleton County, Kentucky	1640	Urban	0.9595	0.9516	17140	Urban	0.9556
18960	Perry County, Kentucky	18	Rural	0.7844	0.7755	99918	Rural	0.7800
18970	Pike County, Kentucky	18	Rural	0.7844	0.7755	99918	Rural	0.7800
18971	Powell County, Kentucky	18	Rural	0.7844	0.7755	99918	Rural	0.7800
18972	Pulaski County, Kentucky	18	Rural	0.7844	0.7755	99918	Rural	0.7800
18973	Robertson County, Kentucky	18	Rural	0.7844	0.7755	99918	Rural	0.7800
18974	Rockcastle County, Kentucky	18	Rural	0.7844	0.7755	99918	Rural	0.7800
18975	Rowan County, Kentucky	18	Rural	0.7844	0.7755	99918	Rural	0.7800
18976	Russell County, Kentucky	18	Rural	0.7844	0.7755	99918	Rural	0.7800
18977	Scott County, Kentucky	4280	Urban	0.9219	0.9359	30460	Urban	0.9289
18978	Shelby County, Kentucky	18	Rural	0.7844	0.9122	31140	Urban	0.8483
18979	Simpson County, Kentucky	18	Rural	0.7844	0.7755	99918	Rural	0.7800
18980	Spencer County, Kentucky	18	Rural	0.7844	0.9122	31140	Urban	0.8483
18981	Taylor County, Kentucky	18	Rural	0.7844	0.7755	99918	Rural	0.7800
18982	Todd County, Kentucky	18	Rural	0.7844	0.7755	99918	Rural	0.7800
18983	Trigg County, Kentucky	18	Rural	0.7844	0.8022	17300	Urban	0.7933
18984	Trimble County, Kentucky	18	Rural	0.7844	0.9122	31140	Urban	0.8483
18985	Union County, Kentucky	18	Rural	0.7844	0.7755	99918	Rural	0.7800
18986	Warren County, Kentucky	18	Rural	0.7844	0.8140	14540	Urban	0.7992
18987	Washington County, Kentucky	18	Rural	0.7844	0.7755	99918	Rural	0.7800
18988	Wayne County, Kentucky	18	Rural	0.7844	0.7755	99918	Rural	0.7800
18989	Webster County, Kentucky	18	Rural	0.7844	0.8372	21780	Urban	0.8108
18990	Whitley County, Kentucky	18	Rural	0.7844	0.7755	99918	Rural	0.7800
18991	Wolfe County, Kentucky	18	Rural	0.7844	0.7755	99918	Rural	0.7800
18992	Woodford County, Kentucky	4280	Urban	0.9219	0.9359	30460	Urban	0.9289
19000	Acadia County, Louisiana	3880	Urban	0.8105	0.7345	99919	Rural	0.7725
19010	Allen County, Louisiana	19	Rural	0.7290	0.7345	99919	Rural	0.7318
19020	Ascension County, Louisiana	0760	Urban	0.8354	0.8319	12940	Urban	0.8337
19030	Assumption County, Louisiana	19	Rural	0.7290	0.7345	99919	Rural	0.7318
19040	Avoyelles County, Louisiana	19	Rural	0.7290	0.7345	99919	Rural	0.7318
19050	Beauregard County, Louisiana	19	Rural	0.7290	0.7345	99919	Rural	0.7318
19060	Bienville County, Louisiana	19	Rural	0.7290	0.7345	99919	Rural	0.7318
19070	Bossier County, Louisiana	7680	Urban	0.9111	0.9132	43340	Urban	0.9122
19080	Caddo County, Louisiana	7680	Urban	0.9111	0.9132	43340	Urban	0.9122
19090	Calcasieu County, Louisiana	3960	Urban	0.7972	0.7935	29340	Urban	0.7954
19100	Caldwell County, Louisiana	19	Rural	0.7290	0.7345	99919	Rural	0.7318
19110	Cameron County, Louisiana	19	Rural	0.7290	0.7935	29340	Urban	0.7613
19120	Catahoula County, Louisiana	19	Rural	0.7290	0.7345	99919	Rural	0.7318
19130	Claiborne County, Louisiana	19	Rural	0.7290	0.7345	99919	Rural	0.7318
19140	Concordia County, Louisiana	19	Rural	0.7290	0.7345	99919	Rural	0.7318
19150	De Soto County, Louisiana	19	Rural	0.7290	0.9132	43340	Urban	0.8211
19160	East Baton Rouge County, Louisiana	0760	Urban	0.8354	0.8319	12940	Urban	0.8337
19170	East Carroll County, Louisiana	19	Rural	0.7290	0.7345	99919	Rural	0.7318
19180	East Feliciana County, Louisiana	19	Rural	0.7290	0.8319	12940	Urban	0.7805
19190	Evangeline County, Louisiana	19	Rural	0.7290	0.7345	99919	Rural	0.7318
19200	Franklin County, Louisiana	19	Rural	0.7290	0.7345	99919	Rural	0.7318
19210	Grant County, Louisiana	19	Rural	0.7290	0.8171	10780	Urban	0.7731
19220	Iberia County, Louisiana	19	Rural	0.7290	0.7345	99919	Rural	0.7318
19230	Iberville County, Louisiana	19	Rural	0.7290	0.8319	12940	Urban	0.7805
19240	Jackson County, Louisiana	19	Rural	0.7290	0.7345	99919	Rural	0.7318
19250	Jefferson County, Louisiana	5560	Urban	0.9103	0.9103	35380	Urban	0.9103
19260	Jefferson Davis County, Louisiana	19	Rural	0.7290	0.7345	99919	Rural	0.7318
19270	Lafayette County, Louisiana	3880	Urban	0.8105	0.8306	29180	Urban	0.8206
19280	Lafourche County, Louisiana	3350	Urban	0.7721	0.7721	26380	Urban	0.7721
19290	La Salle County, Louisiana	19	Rural	0.7290	0.7345	99919	Rural	0.7318
19300	Lincoln County, Louisiana	19	Rural	0.7290	0.7345	99919	Rural	0.7318

TABLE 1.—FY 2006 IRF PPS TRANSITION WAGE INDEX TABLE—Continued

[For discharges occurring on or after October 1, 2005 and on or before September 30, 2006]

SSA state/ county code	County name	MSA No.	MSA urban/ rural	2006 MSA-based WI	2006 CBSA-based WI	CBSA No.	CBSA urban/ rural	Transition wage index *
19310	Livingston County, Louisiana	0760	Urban	0.8354	0.8319	12940	Urban	0.8337
19320	Madison County, Louisiana	19	Rural	0.7290	0.7345	99919	Rural	0.7318
19330	Morehouse County, Louisiana	19	Rural	0.7290	0.7345	99919	Rural	0.7318
19340	Natchitoches County, Louisiana	19	Rural	0.7290	0.7345	99919	Rural	0.7318
19350	Orleans County, Louisiana	5560	Urban	0.9103	0.9103	35380	Urban	0.9103
19360	Ouachita County, Louisiana	5200	Urban	0.7913	0.7903	33740	Urban	0.7908
19370	Plaquemines County, Louisiana	5560	Urban	0.9103	0.9103	35380	Urban	0.9103
19380	Pointe Coupee County, Louisiana	19	Rural	0.7290	0.8319	12940	Urban	0.7805
19390	Rapides County, Louisiana	0220	Urban	0.8171	0.8171	10780	Urban	0.8171
19400	Red River County, Louisiana	19	Rural	0.7290	0.7345	99919	Rural	0.7318
19410	Richland County, Louisiana	19	Rural	0.7290	0.7345	99919	Rural	0.7318
19420	Sabine County, Louisiana	19	Rural	0.7290	0.7345	99919	Rural	0.7318
19430	St Bernard County, Louisiana	5560	Urban	0.9103	0.9103	35380	Urban	0.9103
19440	St Charles County, Louisiana	5560	Urban	0.9103	0.9103	35380	Urban	0.9103
19450	St Helena County, Louisiana	19	Rural	0.7290	0.8319	12940	Urban	0.7805
19460	St James County, Louisiana	5560	Urban	0.9103	0.7345	99919	Rural	0.8224
19470	St John Baptist County, Louisiana	5560	Urban	0.9103	0.9103	35380	Urban	0.9103
19480	St Landry County, Louisiana	3880	Urban	0.8105	0.7345	99919	Rural	0.7725
19490	St Martin County, Louisiana	3880	Urban	0.8105	0.8306	29180	Urban	0.8206
19500	St Mary County, Louisiana	19	Rural	0.7290	0.7345	99919	Rural	0.7318
19510	St Tammany County, Louisiana	5560	Urban	0.9103	0.9103	35380	Urban	0.9103
19520	Tangipahoa County, Louisiana	19	Rural	0.7290	0.7345	99919	Rural	0.7318
19530	Tensas County, Louisiana	19	Rural	0.7290	0.7345	99919	Rural	0.7318
19540	Terrebonne County, Louisiana	3350	Urban	0.7721	0.7721	26380	Urban	0.7721
19550	Union County, Louisiana	19	Rural	0.7290	0.7903	33740	Urban	0.7597
19560	Vermilion County, Louisiana	19	Rural	0.7290	0.7345	99919	Rural	0.7318
19570	Vernon County, Louisiana	19	Rural	0.7290	0.7345	99919	Rural	0.7318
19580	Washington County, Louisiana	19	Rural	0.7290	0.7345	99919	Rural	0.7318
19590	Webster County, Louisiana	7680	Urban	0.9111	0.7345	99919	Rural	0.8228
19600	West Baton Rouge County, Louisiana	0760	Urban	0.8354	0.8319	12940	Urban	0.8337
19610	West Carroll County, Louisiana	19	Rural	0.7290	0.7345	99919	Rural	0.7318
19620	West Feliciana County, Louisiana	19	Rural	0.7290	0.8319	12940	Urban	0.7805
19630	Winn County, Louisiana	19	Rural	0.7290	0.7345	99919	Rural	0.7318
20000	Androscoggin County, Maine	4243	Urban	0.9562	0.9562	30340	Urban	0.9562
20010	Aroostook County, Maine	20	Rural	0.9039	0.9039	99920	Rural	0.9039
20020	Cumberland County, Maine	6403	Urban	1.0112	1.0112	38860	Urban	1.0112
20030	Franklin County, Maine	20	Rural	0.9039	0.9039	99920	Rural	0.9039
20040	Hancock County, Maine	20	Rural	0.9039	0.9039	99920	Rural	0.9039
20050	Kennebec County, Maine	20	Rural	0.9039	0.9039	99920	Rural	0.9039
20060	Knox County, Maine	20	Rural	0.9039	0.9039	99920	Rural	0.9039
20070	Lincoln County, Maine	20	Rural	0.9039	0.9039	99920	Rural	0.9039
20080	Oxford County, Maine	20	Rural	0.9039	0.9039	99920	Rural	0.9039
20090	Penobscot County, Maine	0733	Urban	0.9955	0.9955	12620	Urban	0.9955
20100	Piscataquis County, Maine	20	Rural	0.9039	0.9039	99920	Rural	0.9039
20110	Sagadahoc County, Maine	6403	Urban	1.0112	1.0112	38860	Urban	1.0112
20120	Somerset County, Maine	20	Rural	0.9039	0.9039	99920	Rural	0.9039
20130	Waldo County, Maine	20	Rural	0.9039	0.9039	99920	Rural	0.9039
20140	Washington County, Maine	20	Rural	0.9039	0.9039	99920	Rural	0.9039
20150	York County, Maine	6403	Urban	1.0112	1.0112	38860	Urban	1.0112
21000	Allegany County, Maryland	1900	Urban	0.8662	0.8662	19060	Urban	0.8662
21010	Anne Arundel County, Maryland	0720	Urban	0.9907	0.9907	12580	Urban	0.9907
21020	Baltimore County, Maryland	0720	Urban	0.9907	0.9907	12580	Urban	0.9907
21030	Baltimore City County, Maryland	0720	Urban	0.9907	0.9907	12580	Urban	0.9907
21040	Calvert County, Maryland	8840	Urban	1.0971	1.1023	47894	Urban	1.0997
21050	Caroline County, Maryland	21	Rural	0.9179	0.9220	99921	Rural	0.9200
21060	Carroll County, Maryland	0720	Urban	0.9907	0.9907	12580	Urban	0.9907
21070	Cecil County, Maryland	9160	Urban	1.1121	1.1049	48864	Urban	1.1085
21080	Charles County, Maryland	8840	Urban	1.0971	1.1023	47894	Urban	1.0997
21090	Dorchester County, Maryland	21	Rural	0.9179	0.9220	99921	Rural	0.9200
21100	Frederick County, Maryland	8840	Urban	1.0971	1.0956	13644	Urban	1.0964
21110	Garrett County, Maryland	21	Rural	0.9179	0.9220	99921	Rural	0.9200
21120	Harford County, Maryland	0720	Urban	0.9907	0.9907	12580	Urban	0.9907
21130	Howard County, Maryland	0720	Urban	0.9907	0.9907	12580	Urban	0.9907
21140	Kent County, Maryland	21	Rural	0.9179	0.9220	99921	Rural	0.9200
21150	Montgomery County, Maryland	8840	Urban	1.0971	1.0956	13644	Urban	1.0964
21160	Prince Georges County, Maryland	8840	Urban	1.0971	1.1023	47894	Urban	1.0997
21170	Queen Annes County, Maryland	0720	Urban	0.9907	0.9907	12580	Urban	0.9907
21180	St Marys County, Maryland	21	Rural	0.9179	0.9220	99921	Rural	0.9200

TABLE 1.—FY 2006 IRF PPS TRANSITION WAGE INDEX TABLE—Continued

[For discharges occurring on or after October 1, 2005 and on or before September 30, 2006]

SSA state/ county code	County name	MSA No.	MSA urban/ rural	2006 MSA-based WI	2006 CBSA-based WI	CBSA No.	CBSA urban/ rural	Transition wage index *
21190	Somerset County, Maryland	21	Rural	0.9179	0.9123	41540	Urban	0.9151
21200	Talbot County, Maryland	21	Rural	0.9179	0.9220	99921	Rural	0.9200
21210	Washington County, Maryland	3180	Urban	0.9940	0.9715	25180	Urban	0.9828
21220	Wicomico County, Maryland	21	Rural	0.9179	0.9123	41540	Urban	0.9151
21230	Worcester County, Maryland	21	Rural	0.9179	0.9220	99921	Rural	0.9200
22000	Barnstable County, Massachusetts	0743	Urban	1.2335	1.2335	12700	Urban	1.2335
22010	Berkshire County, Massachusetts	6323	Urban	1.0439	1.0439	38340	Urban	1.0439
22020	Bristol County, Massachusetts	1123	Urban	1.1290	1.0929	39300	Urban	1.1110
22030	Dukes County, Massachusetts	22	Rural	1.0216	1.0216	99922	Rural	1.0216
22040	Essex County, Massachusetts	1123	Urban	1.1290	1.0662	21604	Urban	1.0976
22060	Franklin County, Massachusetts	22	Rural	1.0216	1.0176	44140	Urban	1.0196
22070	Hampden County, Massachusetts	8003	Urban	1.0173	1.0176	44140	Urban	1.0175
22080	Hampshire County, Massachusetts	8003	Urban	1.0173	1.0176	44140	Urban	1.0175
22090	Middlesex County, Massachusetts	1123	Urban	1.1290	1.1189	15764	Urban	1.1240
22120	Nantucket County, Massachusetts	22	Rural	1.0216	1.0216	99922	Rural	1.0216
22130	Norfolk County, Massachusetts	1123	Urban	1.1290	1.1771	14484	Urban	1.1531
22150	Plymouth County, Massachusetts	1123	Urban	1.1290	1.1771	14484	Urban	1.1531
22160	Suffolk County, Massachusetts	1123	Urban	1.1290	1.1771	14484	Urban	1.1531
22170	Worcester County, Massachusetts	1123	Urban	1.1290	1.0996	49340	Urban	1.1143
23000	Alcona County, Michigan	23	Rural	0.8740	0.8786	99923	Rural	0.8763
23010	Alger County, Michigan	23	Rural	0.8740	0.8786	99923	Rural	0.8763
23020	Allegan County, Michigan	3000	Urban	0.9519	0.8786	99923	Rural	0.9153
23030	Alpena County, Michigan	23	Rural	0.8740	0.8786	99923	Rural	0.8763
23040	Antrim County, Michigan	23	Rural	0.8740	0.8786	99923	Rural	0.8763
23050	Arenac County, Michigan	23	Rural	0.8740	0.8786	99923	Rural	0.8763
23060	Baraga County, Michigan	23	Rural	0.8740	0.8786	99923	Rural	0.8763
23070	Barry County, Michigan	23	Rural	0.8740	0.9420	24340	Urban	0.9080
23080	Bay County, Michigan	6960	Urban	0.9696	0.9574	13020	Urban	0.9635
23090	Benzie County, Michigan	23	Rural	0.8740	0.8786	99923	Rural	0.8763
23100	Berrien County, Michigan	0870	Urban	0.8847	0.8847	35660	Urban	0.8847
23110	Branch County, Michigan	23	Rural	0.8740	0.8786	99923	Rural	0.8763
23120	Calhoun County, Michigan	3720	Urban	1.0350	0.9366	12980	Urban	0.9858
23130	Cass County, Michigan	23	Rural	0.8740	0.9447	43780	Urban	0.9094
23140	Charlevoix County, Michigan	23	Rural	0.8740	0.8786	99923	Rural	0.8763
23150	Cheboygan County, Michigan	23	Rural	0.8740	0.8786	99923	Rural	0.8763
23160	Chippewa County, Michigan	23	Rural	0.8740	0.8786	99923	Rural	0.8763
23170	Clare County, Michigan	23	Rural	0.8740	0.8786	99923	Rural	0.8763
23180	Clinton County, Michigan	4040	Urban	0.9658	0.9658	29620	Urban	0.9658
23190	Crawford County, Michigan	23	Rural	0.8740	0.8786	99923	Rural	0.8763
23200	Delta County, Michigan	23	Rural	0.8740	0.8786	99923	Rural	0.8763
23210	Dickinson County, Michigan	23	Rural	0.8740	0.8786	99923	Rural	0.8763
23220	Eaton County, Michigan	4040	Urban	0.9658	0.9658	29620	Urban	0.9658
23230	Emmet County, Michigan	23	Rural	0.8740	0.8786	99923	Rural	0.8763
23240	Genesee County, Michigan	2640	Urban	1.1178	1.1178	22420	Urban	1.1178
23250	Gladwin County, Michigan	23	Rural	0.8740	0.8786	99923	Rural	0.8763
23260	Gogebic County, Michigan	23	Rural	0.8740	0.8786	99923	Rural	0.8763
23270	Grand Traverse County, Michigan	23	Rural	0.8740	0.8786	99923	Rural	0.8763
23280	Gratiot County, Michigan	23	Rural	0.8740	0.8786	99923	Rural	0.8763
23290	Hillsdale County, Michigan	23	Rural	0.8740	0.8786	99923	Rural	0.8763
23300	Houghton County, Michigan	23	Rural	0.8740	0.8786	99923	Rural	0.8763
23310	Huron County, Michigan	23	Rural	0.8740	0.8786	99923	Rural	0.8763
23320	Ingham County, Michigan	4040	Urban	0.9658	0.9658	29620	Urban	0.9658
23330	Ionia County, Michigan	23	Rural	0.8740	0.9420	24340	Urban	0.9080
23340	Iosco County, Michigan	23	Rural	0.8740	0.8786	99923	Rural	0.8763
23350	Iron County, Michigan	23	Rural	0.8740	0.8786	99923	Rural	0.8763
23360	Isabella County, Michigan	23	Rural	0.8740	0.8786	99923	Rural	0.8763
23370	Jackson County, Michigan	3520	Urban	0.9146	0.9146	27100	Urban	0.9146
23380	Kalamazoo County, Michigan	3720	Urban	1.0350	1.0676	2820	Urban	1.0513
23390	Kalkaska County, Michigan	23	Rural	0.8740	0.8786	99923	Rural	0.8763
23400	Kent County, Michigan	3000	Urban	0.9519	0.9420	24340	Urban	0.9470
23410	Keweenaw County, Michigan	23	Rural	0.8740	0.8786	99923	Rural	0.8763
23420	Lake County, Michigan	23	Rural	0.8740	0.8786	99923	Rural	0.8763
23430	Lapeer County, Michigan	2160	Urban	1.0227	1.0112	47644	Urban	1.0170
23440	Leelanau County, Michigan	23	Rural	0.8740	0.8786	99923	Rural	0.8763
23450	Lenawee County, Michigan	0440	Urban	1.0816	0.8786	99923	Rural	0.9801
23460	Livingston County, Michigan	0440	Urban	1.0816	1.0112	47644	Urban	1.0464
23470	Luce County, Michigan	23	Rural	0.8740	0.8786	99923	Rural	0.8763
23480	Mackinac County, Michigan	23	Rural	0.8740	0.8786	99923	Rural	0.8763

TABLE 1.—FY 2006 IRF PPS TRANSITION WAGE INDEX TABLE—Continued

[For discharges occurring on or after October 1, 2005 and on or before September 30, 2006]

SSA state/ county code	County name	MSA No.	MSA urban/ rural	2006 MSA-based WI	2006 CBSA-based WI	CBSA No.	CBSA urban/ rural	Transition wage index *
23490	Macomb County, Michigan	2160	Urban	1.0227	1.0112	47644	Urban	1.0170
23500	Manistee County, Michigan	23	Rural	0.8740	0.8786	99923	Rural	0.8763
23510	Marquette County, Michigan	23	Rural	0.8740	0.8786	99923	Rural	0.8763
23520	Mason County, Michigan	23	Rural	0.8740	0.8786	99923	Rural	0.8763
23530	Mecosta County, Michigan	23	Rural	0.8740	0.8786	99923	Rural	0.8763
23540	Menominee County, Michigan	23	Rural	0.8740	0.8786	99923	Rural	0.8763
23550	Midland County, Michigan	6960	Urban	0.9696	0.8786	99923	Rural	0.9241
23560	Missaukee County, Michigan	23	Rural	0.8740	0.8786	99923	Rural	0.8763
23570	Monroe County, Michigan	2160	Urban	1.0227	0.9506	33780	Urban	0.9867
23580	Montcalm County, Michigan	23	Rural	0.8740	0.8786	99923	Rural	0.8763
23590	Montmorency County, Michigan	23	Rural	0.8740	0.8786	99923	Rural	0.8763
23600	Muskegon County, Michigan	3000	Urban	0.9519	0.9741	34740	Urban	0.9630
23610	Newaygo County, Michigan	23	Rural	0.8740	0.9420	24340	Urban	0.9080
23620	Oakland County, Michigan	2160	Urban	1.0227	1.0112	47644	Urban	1.0170
23630	Oceana County, Michigan	23	Rural	0.8740	0.8786	99923	Rural	0.8763
23640	Ogemaw County, Michigan	23	Rural	0.8740	0.8786	99923	Rural	0.8763
23650	Ontonagon County, Michigan	23	Rural	0.8740	0.8786	99923	Rural	0.8763
23660	Osceola County, Michigan	23	Rural	0.8740	0.8786	99923	Rural	0.8763
23670	Oscoda County, Michigan	23	Rural	0.8740	0.8786	99923	Rural	0.8763
23680	Otsego County, Michigan	23	Rural	0.8740	0.8786	99923	Rural	0.8763
23690	Ottawa County, Michigan	3000	Urban	0.9519	0.9388	26100	Urban	0.9454
23700	Presque Isle County, Michigan	23	Rural	0.8740	0.8786	99923	Rural	0.8763
23710	Roscommon County, Michigan	23	Rural	0.8740	0.8786	99923	Rural	0.8763
23720	Saginaw County, Michigan	6960	Urban	0.9696	0.9814	40980	Urban	0.9755
23730	St Clair County, Michigan	2160	Urban	1.0227	1.0112	47644	Urban	1.0170
23740	St Joseph County, Michigan	23	Rural	0.8740	0.8786	99923	Rural	0.8763
23750	Sanilac County, Michigan	23	Rural	0.8740	0.8786	99923	Rural	0.8763
23760	Schoolcraft County, Michigan	23	Rural	0.8740	0.8786	99923	Rural	0.8763
23770	Shiawassee County, Michigan	23	Rural	0.8740	0.8786	99923	Rural	0.8763
23780	Tuscola County, Michigan	23	Rural	0.8740	0.8786	99923	Rural	0.8763
23790	Van Buren County, Michigan	3720	Urban	1.0350	1.0676	28020	Urban	1.0513
23800	Washtenaw County, Michigan	0440	Urban	1.0816	1.1022	11460	Urban	1.0919
23810	Wayne County, Michigan	2160	Urban	1.0227	1.0349	19804	Urban	1.0288
23830	Wexford County, Michigan	23	Rural	0.8740	0.8786	99923	Rural	0.8763
24000	Aitkin County, Minnesota	24	Rural	0.9339	0.9330	99924	Rural	0.9335
24010	Anoka County, Minnesota	5120	Urban	1.1066	1.1066	33460	Urban	1.1066
24020	Becker County, Minnesota	24	Rural	0.9339	0.9330	99924	Rural	0.9335
24030	Beltrami County, Minnesota	24	Rural	0.9339	0.9330	99924	Rural	0.9335
24040	Benton County, Minnesota	6980	Urban	1.0215	1.0215	41060	Urban	1.0215
24050	Big Stone County, Minnesota	24	Rural	0.9339	0.9330	99924	Rural	0.9335
24060	Blue Earth County, Minnesota	24	Rural	0.9339	0.9330	99924	Rural	0.9335
24070	Brown County, Minnesota	24	Rural	0.9339	0.9330	99924	Rural	0.9335
24080	Carlton County, Minnesota	24	Rural	0.9339	1.0340	20260	Urban	0.9840
24090	Carver County, Minnesota	5120	Urban	1.1066	1.1066	33460	Urban	1.1066
24100	Cass County, Minnesota	24	Rural	0.9339	0.9330	99924	Rural	0.9335
24110	Chippewa County, Minnesota	24	Rural	0.9339	0.9330	99924	Rural	0.9335
24120	Chisago County, Minnesota	5120	Urban	1.1066	1.1066	33460	Urban	1.1066
24130	Clay County, Minnesota	2520	Urban	0.9114	0.9114	22020	Urban	0.9114
24140	Clearwater County, Minnesota	24	Rural	0.9339	0.9330	99924	Rural	0.9335
24150	Cook County, Minnesota	24	Rural	0.9339	0.9330	99924	Rural	0.9335
24160	Cottonwood County, Minnesota	24	Rural	0.9339	0.9330	99924	Rural	0.9335
24170	Crow Wing County, Minnesota	24	Rural	0.9339	0.9330	99924	Rural	0.9335
24180	Dakota County, Minnesota	5120	Urban	1.1066	1.1066	33460	Urban	1.1066
24190	Dodge County, Minnesota	24	Rural	0.9339	1.1504	40340	Urban	1.0422
24200	Douglas County, Minnesota	24	Rural	0.9339	0.9330	99924	Rural	0.9335
24210	Faribault County, Minnesota	24	Rural	0.9339	0.9330	99924	Rural	0.9335
24220	Fillmore County, Minnesota	24	Rural	0.9339	0.9330	99924	Rural	0.9335
24230	Freeborn County, Minnesota	24	Rural	0.9339	0.9330	99924	Rural	0.9335
24240	Goodhue County, Minnesota	24	Rural	0.9339	0.9330	99924	Rural	0.9335
24250	Grant County, Minnesota	24	Rural	0.9339	0.9330	99924	Rural	0.9335
24260	Hennepin County, Minnesota	5120	Urban	1.1066	1.1066	33460	Urban	1.1066
24270	Houston County, Minnesota	3870	Urban	0.9289	0.9289	29100	Urban	0.9289
24280	Hubbard County, Minnesota	24	Rural	0.9339	0.9330	99924	Rural	0.9335
24290	Isanti County, Minnesota	5120	Urban	1.1066	1.1066	33460	Urban	1.1066
24300	Itasca County, Minnesota	24	Rural	0.9339	0.9330	99924	Rural	0.9335
24310	Jackson County, Minnesota	24	Rural	0.9339	0.9330	99924	Rural	0.9335
24320	Kanabec County, Minnesota	24	Rural	0.9339	0.9330	99924	Rural	0.9335
24330	Kandiyohi County, Minnesota	24	Rural	0.9339	0.9330	99924	Rural	0.9335

TABLE 1.—FY 2006 IRF PPS TRANSITION WAGE INDEX TABLE—Continued

[For discharges occurring on or after October 1, 2005 and on or before September 30, 2006]

SSA state/ county code	County name	MSA No.	MSA urban/ rural	2006 MSA-based WI	2006 CBSA-based WI	CBSA No.	CBSA urban/ rural	Transition wage index *
24340	Kittson County, Minnesota	24	Rural	0.9339	0.9330	99924	Rural	0.9335
24350	Koochiching County, Minnesota	24	Rural	0.9339	0.9330	99924	Rural	0.9335
24360	Lac Qui Parle County, Minnesota	24	Rural	0.9339	0.9330	99924	Rural	0.9335
24370	Lake County, Minnesota	24	Rural	0.9339	0.9330	99924	Rural	0.9335
24380	Lake Of Woods County, Minnesota	24	Rural	0.9339	0.9330	99924	Rural	0.9335
24390	Le Sueur County, Minnesota	24	Rural	0.9339	0.9330	99924	Rural	0.9335
24400	Lincoln County, Minnesota	24	Rural	0.9339	0.9330	99924	Rural	0.9335
24410	Lyon County, Minnesota	24	Rural	0.9339	0.9330	99924	Rural	0.9335
24420	Mc Leod County, Minnesota	24	Rural	0.9339	0.9330	99924	Rural	0.9335
24430	Mahnomen County, Minnesota	24	Rural	0.9339	0.9330	99924	Rural	0.9335
24440	Marshall County, Minnesota	24	Rural	0.9339	0.9330	99924	Rural	0.9335
24450	Martin County, Minnesota	24	Rural	0.9339	0.9330	99924	Rural	0.9335
24460	Meeker County, Minnesota	24	Rural	0.9339	0.9330	99924	Rural	0.9335
24470	Mille Lacs County, Minnesota	24	Rural	0.9339	0.9330	99924	Rural	0.9335
24480	Morrison County, Minnesota	24	Rural	0.9339	0.9330	99924	Rural	0.9335
24490	Mower County, Minnesota	24	Rural	0.9339	0.9330	99924	Rural	0.9335
24500	Murray County, Minnesota	24	Rural	0.9339	0.9330	99924	Rural	0.9335
24510	Nicollet County, Minnesota	24	Rural	0.9339	0.9330	99924	Rural	0.9335
24520	Nobles County, Minnesota	24	Rural	0.9339	0.9330	99924	Rural	0.9335
24530	Norman County, Minnesota	24	Rural	0.9339	0.9330	99924	Rural	0.9335
24540	Olmsted County, Minnesota	6820	Urban	1.1504	1.1504	40340	Urban	1.1504
24550	Otter Tail County, Minnesota	24	Rural	0.9339	0.9330	99924	Rural	0.9335
24560	Pennington County, Minnesota	24	Rural	0.9339	0.9330	99924	Rural	0.9335
24570	Pine County, Minnesota	24	Rural	0.9339	0.9330	99924	Rural	0.9335
24580	Pipestone County, Minnesota	24	Rural	0.9339	0.9330	99924	Rural	0.9335
24590	Polk County, Minnesota	2985	Urban	0.9091	0.9091	24220	Urban	0.9091
24600	Pope County, Minnesota	24	Rural	0.9339	0.9330	99924	Rural	0.9335
24610	Ramsey County, Minnesota	5120	Urban	1.1066	1.1066	33460	Urban	1.1066
24620	Red Lake County, Minnesota	24	Rural	0.9339	0.9330	99924	Rural	0.9335
24630	Redwood County, Minnesota	24	Rural	0.9339	0.9330	99924	Rural	0.9335
24640	Renville County, Minnesota	24	Rural	0.9339	0.9330	99924	Rural	0.9335
24650	Rice County, Minnesota	24	Rural	0.9339	0.9330	99924	Rural	0.9335
24660	Rock County, Minnesota	24	Rural	0.9339	0.9330	99924	Rural	0.9335
24670	Roseau County, Minnesota	24	Rural	0.9339	0.9330	99924	Rural	0.9335
24680	St Louis County, Minnesota	2240	Urban	1.0356	1.0340	20260	Urban	1.0348
24690	Scott County, Minnesota	5120	Urban	1.1066	1.1066	33460	Urban	1.1066
24700	Sherburne County, Minnesota	5120	Urban	1.1066	1.1066	33460	Urban	1.1066
24710	Sibley County, Minnesota	24	Rural	0.9339	0.9330	99924	Rural	0.9335
24720	Stearns County, Minnesota	6980	Urban	1.0215	1.0215	41060	Urban	1.0215
24730	Steele County, Minnesota	24	Rural	0.9339	0.9330	99924	Rural	0.9335
24740	Stevens County, Minnesota	24	Rural	0.9339	0.9330	99924	Rural	0.9335
24750	Swift County, Minnesota	24	Rural	0.9339	0.9330	99924	Rural	0.9335
24760	Todd County, Minnesota	24	Rural	0.9339	0.9330	99924	Rural	0.9335
24770	Traverse County, Minnesota	24	Rural	0.9339	0.9330	99924	Rural	0.9335
24780	Wabasha County, Minnesota	24	Rural	0.9339	1.1504	40340	Urban	1.0422
24790	Wadena County, Minnesota	24	Rural	0.9339	0.9330	99924	Rural	0.9335
24800	Waseca County, Minnesota	24	Rural	0.9339	0.9330	99924	Rural	0.9335
24810	Washington County, Minnesota	5120	Urban	1.1066	1.1066	33460	Urban	1.1066
24820	Watonwan County, Minnesota	24	Rural	0.9339	0.9330	99924	Rural	0.9335
24830	Wilkin County, Minnesota	24	Rural	0.9339	0.9330	99924	Rural	0.9335
24840	Winona County, Minnesota	24	Rural	0.9339	0.9330	99924	Rural	0.9335
24850	Wright County, Minnesota	5120	Urban	1.1066	1.1066	33460	Urban	1.1066
24860	Yellow Medicine County, Minnesota	24	Rural	0.9339	0.9330	99924	Rural	0.9335
25000	Adams County, Mississippi	25	Rural	0.7583	0.7635	99925	Rural	0.7609
25010	Alcorn County, Mississippi	25	Rural	0.7583	0.7635	99925	Rural	0.7609
25020	Amite County, Mississippi	25	Rural	0.7583	0.7635	99925	Rural	0.7609
25030	Attala County, Mississippi	25	Rural	0.7583	0.7635	99925	Rural	0.7609
25040	Benton County, Mississippi	25	Rural	0.7583	0.7635	99925	Rural	0.7609
25050	Bolivar County, Mississippi	25	Rural	0.7583	0.7635	99925	Rural	0.7609
25060	Calhoun County, Mississippi	25	Rural	0.7583	0.7635	99925	Rural	0.7609
25070	Carroll County, Mississippi	25	Rural	0.7583	0.7635	99925	Rural	0.7609
25080	Chickasaw County, Mississippi	25	Rural	0.7583	0.7635	99925	Rural	0.7609
25090	Choctaw County, Mississippi	25	Rural	0.7583	0.7635	99925	Rural	0.7609
25100	Claiborne County, Mississippi	25	Rural	0.7583	0.7635	99925	Rural	0.7609
25110	Clarke County, Mississippi	25	Rural	0.7583	0.7635	99925	Rural	0.7609
25120	Clay County, Mississippi	25	Rural	0.7583	0.7635	99925	Rural	0.7609
25130	Coahoma County, Mississippi	25	Rural	0.7583	0.7635	99925	Rural	0.7609
25140	Copiah County, Mississippi	25	Rural	0.7583	0.8291	27140	Urban	0.7937

TABLE 1.—FY 2006 IRF PPS TRANSITION WAGE INDEX TABLE—Continued

[For discharges occurring on or after October 1, 2005 and on or before September 30, 2006]

SSA state/ county code	County name	MSA No.	MSA urban/ rural	2006 MSA-based WI	2006 CBSA-based WI	CBSA No.	CBSA urban/ rural	Transition wage index *
25150	Covington County, Mississippi	25	Rural	0.7583	0.7635	99925	Rural	0.7609
25160	Desoto County, Mississippi	4920	Urban	0.9234	0.9217	32820	Urban	0.9226
25170	Forrest County, Mississippi	3285	Urban	0.7362	0.7362	25620	Urban	0.7362
25180	Franklin County, Mississippi	25	Rural	0.7583	0.7635	99925	Rural	0.7609
25190	George County, Mississippi	25	Rural	0.7583	0.7974	37700	Urban	0.7779
25200	Greene County, Mississippi	25	Rural	0.7583	0.7635	99925	Rural	0.7609
25210	Grenada County, Mississippi	25	Rural	0.7583	0.7635	99925	Rural	0.7609
25220	Hancock County, Mississippi	0920	Urban	0.8649	0.8950	25060	Urban	0.8800
25230	Harrison County, Mississippi	0920	Urban	0.8649	0.8950	25060	Urban	0.8800
25240	Hinds County, Mississippi	3560	Urban	0.8406	0.8291	27140	Urban	0.8349
25250	Holmes County, Mississippi	25	Rural	0.7583	0.7635	99925	Rural	0.7609
25260	Humphreys County, Mississippi	25	Rural	0.7583	0.7635	99925	Rural	0.7609
25270	Issaquena County, Mississippi	25	Rural	0.7583	0.7635	99925	Rural	0.7609
25280	Itawamba County, Mississippi	25	Rural	0.7583	0.7635	99925	Rural	0.7609
25290	Jackson County, Mississippi	0920	Urban	0.8649	0.7974	37700	Urban	0.8312
25300	Jasper County, Mississippi	25	Rural	0.7583	0.7635	99925	Rural	0.7609
25310	Jefferson County, Mississippi	25	Rural	0.7583	0.7635	99925	Rural	0.7609
25320	Jefferson Davis County, Mississippi	25	Rural	0.7583	0.7635	99925	Rural	0.7609
25330	Jones County, Mississippi	25	Rural	0.7583	0.7635	99925	Rural	0.7609
25340	Kemper County, Mississippi	25	Rural	0.7583	0.7635	99925	Rural	0.7609
25350	Lafayette County, Mississippi	25	Rural	0.7583	0.7635	99925	Rural	0.7609
25360	Lamar County, Mississippi	3285	Urban	0.7362	0.7362	25620	Urban	0.7362
25370	Lauderdale County, Mississippi	25	Rural	0.7583	0.7635	99925	Rural	0.7609
25380	Lawrence County, Mississippi	25	Rural	0.7583	0.7635	99925	Rural	0.7609
25390	Leake County, Mississippi	25	Rural	0.7583	0.7635	99925	Rural	0.7609
25400	Lee County, Mississippi	25	Rural	0.7583	0.7635	99925	Rural	0.7609
25410	Leflore County, Mississippi	25	Rural	0.7583	0.7635	99925	Rural	0.7609
25420	Lincoln County, Mississippi	25	Rural	0.7583	0.7635	99925	Rural	0.7609
25430	Lowndes County, Mississippi	25	Rural	0.7583	0.7635	99925	Rural	0.7609
25440	Madison County, Mississippi	3560	Urban	0.8406	0.8291	27140	Urban	0.8349
25450	Marion County, Mississippi	25	Rural	0.7583	0.7635	99925	Rural	0.7609
25460	Marshall County, Mississippi	25	Rural	0.7583	0.9217	32820	Urban	0.8400
25470	Monroe County, Mississippi	25	Rural	0.7583	0.7635	99925	Rural	0.7609
25480	Montgomery County, Mississippi	25	Rural	0.7583	0.7635	99925	Rural	0.7609
25490	Neshoba County, Mississippi	25	Rural	0.7583	0.7635	99925	Rural	0.7609
25500	Newton County, Mississippi	25	Rural	0.7583	0.7635	99925	Rural	0.7609
25510	Noxubee County, Mississippi	25	Rural	0.7583	0.7635	99925	Rural	0.7609
25520	Oktibbeha County, Mississippi	25	Rural	0.7583	0.7635	99925	Rural	0.7609
25530	Panola County, Mississippi	25	Rural	0.7583	0.7635	99925	Rural	0.7609
25540	Pearl River County, Mississippi	25	Rural	0.7583	0.7635	99925	Rural	0.7609
25550	Perry County, Mississippi	25	Rural	0.7583	0.7362	25620	Urban	0.7473
25560	Pike County, Mississippi	25	Rural	0.7583	0.7635	99925	Rural	0.7609
25570	Pontotoc County, Mississippi	25	Rural	0.7583	0.7635	99925	Rural	0.7609
25580	Prentiss County, Mississippi	25	Rural	0.7583	0.7635	99925	Rural	0.7609
25590	Quitman County, Mississippi	25	Rural	0.7583	0.7635	99925	Rural	0.7609
25600	Rankin County, Mississippi	3560	Urban	0.8406	0.8291	27140	Urban	0.8349
25610	Scott County, Mississippi	25	Rural	0.7583	0.7635	99925	Rural	0.7609
25620	Sharkey County, Mississippi	25	Rural	0.7583	0.7635	99925	Rural	0.7609
25630	Simpson County, Mississippi	25	Rural	0.7583	0.8291	27140	Urban	0.7937
25640	Smith County, Mississippi	25	Rural	0.7583	0.7635	99925	Rural	0.7609
25650	Stone County, Mississippi	25	Rural	0.7583	0.8950	25060	Urban	0.8267
25660	Sunflower County, Mississippi	25	Rural	0.7583	0.7635	99925	Rural	0.7609
25670	Tallahatchie County, Mississippi	25	Rural	0.7583	0.7635	99925	Rural	0.7609
25680	Tate County, Mississippi	25	Rural	0.7583	0.9217	32820	Urban	0.8400
25690	Tippah County, Mississippi	25	Rural	0.7583	0.7635	99925	Rural	0.7609
25700	Tishomingo County, Mississippi	25	Rural	0.7583	0.7635	99925	Rural	0.7609
25710	Tunica County, Mississippi	25	Rural	0.7583	0.9217	32820	Urban	0.8400
25720	Union County, Mississippi	25	Rural	0.7583	0.7635	99925	Rural	0.7609
25730	Walthall County, Mississippi	25	Rural	0.7583	0.7635	99925	Rural	0.7609
25740	Warren County, Mississippi	25	Rural	0.7583	0.7635	99925	Rural	0.7609
25750	Washington County, Mississippi	25	Rural	0.7583	0.7635	99925	Rural	0.7609
25760	Wayne County, Mississippi	25	Rural	0.7583	0.7635	99925	Rural	0.7609
25770	Webster County, Mississippi	25	Rural	0.7583	0.7635	99925	Rural	0.7609
25780	Wilkinson County, Mississippi	25	Rural	0.7583	0.7635	99925	Rural	0.7609
25790	Winston County, Mississippi	25	Rural	0.7583	0.7635	99925	Rural	0.7609
25800	Yalobusha County, Mississippi	25	Rural	0.7583	0.7635	99925	Rural	0.7609
25810	Yazoo County, Mississippi	25	Rural	0.7583	0.7635	99925	Rural	0.7609
26000	Adair County, Missouri	26	Rural	0.7829	0.7762	99926	Rural	0.7796

TABLE 1.—FY 2006 IRF PPS TRANSITION WAGE INDEX TABLE—Continued

[For discharges occurring on or after October 1, 2005 and on or before September 30, 2006]

SSA state/ county code	County name	MSA No.	MSA urban/ rural	2006 MSA-based WI	2006 CBSA-based WI	CBSA No.	CBSA urban/ rural	Transition wage index *
26010	Andrew County, Missouri	7000	Urban	1.0013	1.0013	41140	Urban	1.0013
26020	Atchison County, Missouri	26	Rural	0.7829	0.7762	99926	Rural	0.7796
26030	Audrain County, Missouri	26	Rural	0.7829	0.7762	99926	Rural	0.7796
26040	Barry County, Missouri	26	Rural	0.7829	0.7762	99926	Rural	0.7796
26050	Barton County, Missouri	26	Rural	0.7829	0.7762	99926	Rural	0.7796
26060	Bates County, Missouri	26	Rural	0.7829	0.9629	28140	Urban	0.8729
26070	Benton County, Missouri	26	Rural	0.7829	0.7762	99926	Rural	0.7796
26080	Bollinger County, Missouri	26	Rural	0.7829	0.7762	99926	Rural	0.7796
26090	Boone County, Missouri	1740	Urban	0.8396	0.8396	17860	Urban	0.8396
26100	Buchanan County, Missouri	7000	Urban	1.0013	1.0013	41140	Urban	1.0013
26110	Butler County, Missouri	26	Rural	0.7829	0.7762	99926	Rural	0.7796
26120	Caldwell County, Missouri	26	Rural	0.7829	0.9629	28140	Urban	0.8729
26130	Callaway County, Missouri	26	Rural	0.7829	0.8338	27620	Urban	0.8084
26140	Camden County, Missouri	26	Rural	0.7829	0.7762	99926	Rural	0.7796
26150	Cape Girardeau County, Missouri	26	Rural	0.7829	0.7762	99926	Rural	0.7796
26160	Carroll County, Missouri	26	Rural	0.7829	0.7762	99926	Rural	0.7796
26170	Carter County, Missouri	26	Rural	0.7829	0.7762	99926	Rural	0.7796
26180	Cass County, Missouri	3760	Urban	0.9641	0.9629	28140	Urban	0.9635
26190	Cedar County, Missouri	26	Rural	0.7829	0.7762	99926	Rural	0.7796
26200	Chariton County, Missouri	26	Rural	0.7829	0.7762	99926	Rural	0.7796
26210	Christian County, Missouri	7920	Urban	0.8597	0.8557	44180	Urban	0.8577
26220	Clark County, Missouri	26	Rural	0.7829	0.7762	99926	Rural	0.7796
26230	Clay County, Missouri	3760	Urban	0.9641	0.9629	28140	Urban	0.9635
26240	Clinton County, Missouri	3760	Urban	0.9641	0.9629	28140	Urban	0.9635
26250	Cole County, Missouri	26	Rural	0.7829	0.8338	27620	Urban	0.8084
26260	Cooper County, Missouri	26	Rural	0.7829	0.7762	99926	Rural	0.7796
26270	Crawford County, Missouri	26	Rural	0.7829	0.9076	41180	Urban	0.8453
26280	Dade County, Missouri	26	Rural	0.7829	0.7762	99926	Rural	0.7796
26290	Dallas County, Missouri	26	Rural	0.7829	0.8557	44180	Urban	0.8193
26300	Daviess County, Missouri	26	Rural	0.7829	0.7762	99926	Rural	0.7796
26310	De Kalb County, Missouri	26	Rural	0.7829	1.0013	41140	Urban	0.8921
26320	Dent County, Missouri	26	Rural	0.7829	0.7762	99926	Rural	0.7796
26330	Douglas County, Missouri	26	Rural	0.7829	0.7762	99926	Rural	0.7796
26340	Dunklin County, Missouri	26	Rural	0.7829	0.7762	99926	Rural	0.7796
26350	Franklin County, Missouri	7040	Urban	0.9081	0.9076	41180	Urban	0.9079
26360	Gasconade County, Missouri	26	Rural	0.7829	0.7762	99926	Rural	0.7796
26370	Gentry County, Missouri	26	Rural	0.7829	0.7762	99926	Rural	0.7796
26380	Greene County, Missouri	7920	Urban	0.8597	0.8557	44180	Urban	0.8577
26390	Grundy County, Missouri	26	Rural	0.7829	0.7762	99926	Rural	0.7796
26400	Harrison County, Missouri	26	Rural	0.7829	0.7762	99926	Rural	0.7796
26410	Henry County, Missouri	26	Rural	0.7829	0.7762	99926	Rural	0.7796
26411	Hickory County, Missouri	26	Rural	0.7829	0.7762	99926	Rural	0.7796
26412	Holt County, Missouri	26	Rural	0.7829	0.7762	99926	Rural	0.7796
26440	Howard County, Missouri	26	Rural	0.7829	0.8396	17860	Urban	0.8113
26450	Howell County, Missouri	26	Rural	0.7829	0.7762	99926	Rural	0.7796
26460	Iron County, Missouri	26	Rural	0.7829	0.7762	99926	Rural	0.7796
26470	Jackson County, Missouri	3760	Urban	0.9641	0.9629	28140	Urban	0.9635
26480	Jasper County, Missouri	3710	Urban	0.8721	0.8721	27900	Urban	0.8721
26490	Jefferson County, Missouri	7040	Urban	0.9081	0.9076	41180	Urban	0.9079
26500	Johnson County, Missouri	26	Rural	0.7829	0.7762	99926	Rural	0.7796
26510	Knox County, Missouri	26	Rural	0.7829	0.7762	99926	Rural	0.7796
26520	Laclede County, Missouri	26	Rural	0.7829	0.7762	99926	Rural	0.7796
26530	Lafayette County, Missouri	3760	Urban	0.9641	0.9629	28140	Urban	0.9635
26540	Lawrence County, Missouri	26	Rural	0.7829	0.7762	99926	Rural	0.7796
26541	Lewis County, Missouri	26	Rural	0.7829	0.7762	99926	Rural	0.7796
26560	Lincoln County, Missouri	7040	Urban	0.9081	0.9076	41180	Urban	0.9079
26570	Linn County, Missouri	26	Rural	0.7829	0.7762	99926	Rural	0.7796
26580	Livingston County, Missouri	26	Rural	0.7829	0.7762	99926	Rural	0.7796
26590	Mc Donald County, Missouri	26	Rural	0.7829	0.8636	22220	Urban	0.8233
26600	Macon County, Missouri	26	Rural	0.7829	0.7762	99926	Rural	0.7796
26601	Madison County, Missouri	26	Rural	0.7829	0.7762	99926	Rural	0.7796
26620	Maries County, Missouri	26	Rural	0.7829	0.7762	99926	Rural	0.7796
26630	Marion County, Missouri	26	Rural	0.7829	0.7762	99926	Rural	0.7796
26631	Mercer County, Missouri	26	Rural	0.7829	0.7762	99926	Rural	0.7796
26650	Miller County, Missouri	26	Rural	0.7829	0.7762	99926	Rural	0.7796
26660	Mississippi County, Missouri	26	Rural	0.7829	0.7762	99926	Rural	0.7796
26670	Moniteau County, Missouri	26	Rural	0.7829	0.8338	27620	Urban	0.8084
26680	Monroe County, Missouri	26	Rural	0.7829	0.7762	99926	Rural	0.7796

TABLE 1.—FY 2006 IRF PPS TRANSITION WAGE INDEX TABLE—Continued

[For discharges occurring on or after October 1, 2005 and on or before September 30, 2006]

SSA state/ county code	County name	MSA No.	MSA urban/ rural	2006 MSA-based WI	2006 CBSA-based WI	CBSA No.	CBSA urban/ rural	Transition wage index *
26690	Montgomery County, Missouri	26	Rural	0.7829	0.7762	99926	Rural	0.7796
26700	Morgan County, Missouri	26	Rural	0.7829	0.7762	99926	Rural	0.7796
26710	New Madrid County, Missouri	26	Rural	0.7829	0.7762	99926	Rural	0.7796
26720	Newton County, Missouri	3710	Urban	0.8721	0.8721	27900	Urban	0.8721
26730	Nodaway County, Missouri	26	Rural	0.7829	0.7762	99926	Rural	0.7796
26740	Oregon County, Missouri	26	Rural	0.7829	0.7762	99926	Rural	0.7796
26750	Osage County, Missouri	26	Rural	0.7829	0.8338	27620	Urban	0.8084
26751	Ozark County, Missouri	26	Rural	0.7829	0.7762	99926	Rural	0.7796
26770	Pemiscot County, Missouri	26	Rural	0.7829	0.7762	99926	Rural	0.7796
26780	Perry County, Missouri	26	Rural	0.7829	0.7762	99926	Rural	0.7796
26790	Pettis County, Missouri	26	Rural	0.7829	0.7762	99926	Rural	0.7796
26800	Phelps County, Missouri	26	Rural	0.7829	0.7762	99926	Rural	0.7796
26810	Pike County, Missouri	26	Rural	0.7829	0.7762	99926	Rural	0.7796
26820	Platte County, Missouri	3760	Urban	0.9641	0.9629	28140	Urban	0.9635
26821	Polk County, Missouri	26	Rural	0.7829	0.8557	44180	Urban	0.8193
26840	Pulaski County, Missouri	26	Rural	0.7829	0.7762	99926	Rural	0.7796
26850	Putnam County, Missouri	26	Rural	0.7829	0.7762	99926	Rural	0.7796
26860	Ralls County, Missouri	26	Rural	0.7829	0.7762	99926	Rural	0.7796
26870	Randolph County, Missouri	26	Rural	0.7829	0.7762	99926	Rural	0.7796
26880	Ray County, Missouri	3760	Urban	0.9641	0.9629	28140	Urban	0.9635
26881	Reynolds County, Missouri	26	Rural	0.7829	0.7762	99926	Rural	0.7796
26900	Ripley County, Missouri	26	Rural	0.7829	0.7762	99926	Rural	0.7796
26910	St Charles County, Missouri	7040	Urban	0.9081	0.9076	41180	Urban	0.9079
26911	St Clair County, Missouri	26	Rural	0.7829	0.7762	99926	Rural	0.7796
26930	St Francois County, Missouri	26	Rural	0.7829	0.7762	99926	Rural	0.7796
26940	St Louis County, Missouri	7040	Urban	0.9081	0.9076	41180	Urban	0.9079
26950	St Louis City County, Missouri	7040	Urban	0.9081	0.9076	41180	Urban	0.9079
26960	Ste Genevieve County, Missouri	26	Rural	0.7829	0.7762	99926	Rural	0.7796
26970	Saline County, Missouri	26	Rural	0.7829	0.7762	99926	Rural	0.7796
26980	Schuyler County, Missouri	26	Rural	0.7829	0.7762	99926	Rural	0.7796
26981	Scotland County, Missouri	26	Rural	0.7829	0.7762	99926	Rural	0.7796
26982	Scott County, Missouri	26	Rural	0.7829	0.7762	99926	Rural	0.7796
26983	Shannon County, Missouri	26	Rural	0.7829	0.7762	99926	Rural	0.7796
26984	Shelby County, Missouri	26	Rural	0.7829	0.7762	99926	Rural	0.7796
26985	Stoddard County, Missouri	26	Rural	0.7829	0.7762	99926	Rural	0.7796
26986	Stone County, Missouri	26	Rural	0.7829	0.7762	99926	Rural	0.7796
26987	Sullivan County, Missouri	26	Rural	0.7829	0.7762	99926	Rural	0.7796
26988	Taney County, Missouri	26	Rural	0.7829	0.7762	99926	Rural	0.7796
26989	Texas County, Missouri	26	Rural	0.7829	0.7762	99926	Rural	0.7796
26990	Vernon County, Missouri	26	Rural	0.7829	0.7762	99926	Rural	0.7796
26991	Warren County, Missouri	7040	Urban	0.9081	0.9076	41180	Urban	0.9079
26992	Washington County, Missouri	26	Rural	0.7829	0.9076	41180	Urban	0.8453
26993	Wayne County, Missouri	26	Rural	0.7829	0.7762	99926	Rural	0.7796
26994	Webster County, Missouri	7920	Urban	0.8597	0.8557	44180	Urban	0.8577
26995	Worth County, Missouri	26	Rural	0.7829	0.7762	99926	Rural	0.7796
26996	Wright County, Missouri	26	Rural	0.7829	0.7762	99926	Rural	0.7796
27000	Beaverhead County, Montana	27	Rural	0.8701	0.8701	99927	Rural	0.8701
27010	Big Horn County, Montana	27	Rural	0.8701	0.8701	99927	Rural	0.8701
27020	Blaine County, Montana	27	Rural	0.8701	0.8701	99927	Rural	0.8701
27030	Broadwater County, Montana	27	Rural	0.8701	0.8701	99927	Rural	0.8701
27040	Carbon County, Montana	27	Rural	0.8701	0.8961	13740	Urban	0.8831
27050	Carter County, Montana	27	Rural	0.8701	0.8701	99927	Rural	0.8701
27060	Cascade County, Montana	3040	Urban	0.8810	0.8810	24500	Urban	0.8810
27070	Chouteau County, Montana	27	Rural	0.8701	0.8701	99927	Rural	0.8701
27080	Custer County, Montana	27	Rural	0.8701	0.8701	99927	Rural	0.8701
27090	Daniels County, Montana	27	Rural	0.8701	0.8701	99927	Rural	0.8701
27100	Dawson County, Montana	27	Rural	0.8701	0.8701	99927	Rural	0.8701
27110	Deer Lodge County, Montana	27	Rural	0.8701	0.8701	99927	Rural	0.8701
27113	Yellowstone National Park, Montana	27	Rural	0.8701	0.8701	99927	Rural	0.8701
27120	Fallon County, Montana	27	Rural	0.8701	0.8701	99927	Rural	0.8701
27130	Fergus County, Montana	27	Rural	0.8701	0.8701	99927	Rural	0.8701
27140	Flathead County, Montana	27	Rural	0.8701	0.8701	99927	Rural	0.8701
27150	Gallatin County, Montana	27	Rural	0.8701	0.8701	99927	Rural	0.8701
27160	Garfield County, Montana	27	Rural	0.8701	0.8701	99927	Rural	0.8701
27170	Glacier County, Montana	27	Rural	0.8701	0.8701	99927	Rural	0.8701
27180	Golden Valley County, Montana	27	Rural	0.8701	0.8701	99927	Rural	0.8701
27190	Granite County, Montana	27	Rural	0.8701	0.8701	99927	Rural	0.8701
27200	Hill County, Montana	27	Rural	0.8701	0.8701	99927	Rural	0.8701

TABLE 1.—FY 2006 IRF PPS TRANSITION WAGE INDEX TABLE—Continued

[For discharges occurring on or after October 1, 2005 and on or before September 30, 2006]

SSA state/ county code	County name	MSA No.	MSA urban/ rural	2006 MSA-based WI	2006 CBSA-based WI	CBSA No.	CBSA urban/ rural	Transition wage index *
27210	Jefferson County, Montana	27	Rural	0.8701	0.8701	99927	Rural	0.8701
27220	Judith Basin County, Montana	27	Rural	0.8701	0.8701	99927	Rural	0.8701
27230	Lake County, Montana	27	Rural	0.8701	0.8701	99927	Rural	0.8701
27240	Lewis And Clark County, Montana	27	Rural	0.8701	0.8701	99927	Rural	0.8701
27250	Liberty County, Montana	27	Rural	0.8701	0.8701	99927	Rural	0.8701
27260	Lincoln County, Montana	27	Rural	0.8701	0.8701	99927	Rural	0.8701
27270	Mc Cone County, Montana	27	Rural	0.8701	0.8701	99927	Rural	0.8701
27280	Madison County, Montana	27	Rural	0.8701	0.8701	99927	Rural	0.8701
27290	Meagher County, Montana	27	Rural	0.8701	0.8701	99927	Rural	0.8701
27300	Mineral County, Montana	27	Rural	0.8701	0.8701	99927	Rural	0.8701
27310	Missoula County, Montana	5140	Urban	0.9618	0.9618	33540	Urban	0.9618
27320	Musselshell County, Montana	27	Rural	0.8701	0.8701	99927	Rural	0.8701
27330	Park County, Montana	27	Rural	0.8701	0.8701	99927	Rural	0.8701
27340	Petroleum County, Montana	27	Rural	0.8701	0.8701	99927	Rural	0.8701
27350	Phillips County, Montana	27	Rural	0.8701	0.8701	99927	Rural	0.8701
27360	Pondera County, Montana	27	Rural	0.8701	0.8701	99927	Rural	0.8701
27370	Powder River County, Montana	27	Rural	0.8701	0.8701	99927	Rural	0.8701
27380	Powell County, Montana	27	Rural	0.8701	0.8701	99927	Rural	0.8701
27390	Prairie County, Montana	27	Rural	0.8701	0.8701	99927	Rural	0.8701
27400	Ravalli County, Montana	27	Rural	0.8701	0.8701	99927	Rural	0.8701
27410	Richland County, Montana	27	Rural	0.8701	0.8701	99927	Rural	0.8701
27420	Roosevelt County, Montana	27	Rural	0.8701	0.8701	99927	Rural	0.8701
27430	Rosebud County, Montana	27	Rural	0.8701	0.8701	99927	Rural	0.8701
27440	Sanders County, Montana	27	Rural	0.8701	0.8701	99927	Rural	0.8701
27450	Sheridan County, Montana	27	Rural	0.8701	0.8701	99927	Rural	0.8701
27460	Silver Bow County, Montana	27	Rural	0.8701	0.8701	99927	Rural	0.8701
27470	Stillwater County, Montana	27	Rural	0.8701	0.8701	99927	Rural	0.8701
27480	Sweet Grass County, Montana	27	Rural	0.8701	0.8701	99927	Rural	0.8701
27490	Teton County, Montana	27	Rural	0.8701	0.8701	99927	Rural	0.8701
27500	Toole County, Montana	27	Rural	0.8701	0.8701	99927	Rural	0.8701
27510	Treasure County, Montana	27	Rural	0.8701	0.8701	99927	Rural	0.8701
27520	Valley County, Montana	27	Rural	0.8701	0.8701	99927	Rural	0.8701
27530	Wheatland County, Montana	27	Rural	0.8701	0.8701	99927	Rural	0.8701
27540	Wibaux County, Montana	27	Rural	0.8701	0.8701	99927	Rural	0.8701
27550	Yellowstone County, Montana	0880	Urban	0.8961	0.8961	13740	Urban	0.8961
28000	Adams County, Nebraska	28	Rural	0.9035	0.9035	99928	Rural	0.9035
28010	Antelope County, Nebraska	28	Rural	0.9035	0.9035	99928	Rural	0.9035
28020	Arthur County, Nebraska	28	Rural	0.9035	0.9035	99928	Rural	0.9035
28030	Banner County, Nebraska	28	Rural	0.9035	0.9035	99928	Rural	0.9035
28040	Blaine County, Nebraska	28	Rural	0.9035	0.9035	99928	Rural	0.9035
28050	Boone County, Nebraska	28	Rural	0.9035	0.9035	99928	Rural	0.9035
28060	Box Butte County, Nebraska	28	Rural	0.9035	0.9035	99928	Rural	0.9035
28070	Boyd County, Nebraska	28	Rural	0.9035	0.9035	99928	Rural	0.9035
28080	Brown County, Nebraska	28	Rural	0.9035	0.9035	99928	Rural	0.9035
28090	Buffalo County, Nebraska	28	Rural	0.9035	0.9035	99928	Rural	0.9035
28100	Burt County, Nebraska	28	Rural	0.9035	0.9035	99928	Rural	0.9035
28110	Butler County, Nebraska	28	Rural	0.9035	0.9035	99928	Rural	0.9035
28120	Cass County, Nebraska	5920	Urban	0.9754	0.9754	36540	Urban	0.9754
28130	Cedar County, Nebraska	28	Rural	0.9035	0.9035	99928	Rural	0.9035
28140	Chase County, Nebraska	28	Rural	0.9035	0.9035	99928	Rural	0.9035
28150	Cherry County, Nebraska	28	Rural	0.9035	0.9035	99928	Rural	0.9035
28160	Cheyenne County, Nebraska	28	Rural	0.9035	0.9035	99928	Rural	0.9035
28170	Clay County, Nebraska	28	Rural	0.9035	0.9035	99928	Rural	0.9035
28180	Colfax County, Nebraska	28	Rural	0.9035	0.9035	99928	Rural	0.9035
28190	Cuming County, Nebraska	28	Rural	0.9035	0.9035	99928	Rural	0.9035
28200	Custer County, Nebraska	28	Rural	0.9035	0.9035	99928	Rural	0.9035
28210	Dakota County, Nebraska	7720	Urban	0.9094	0.9070	43580	Urban	0.9082
28220	Dawes County, Nebraska	28	Rural	0.9035	0.9035	99928	Rural	0.9035
28230	Dawson County, Nebraska	28	Rural	0.9035	0.9035	99928	Rural	0.9035
28240	Deuel County, Nebraska	28	Rural	0.9035	0.9035	99928	Rural	0.9035
28250	Dixon County, Nebraska	28	Rural	0.9035	0.9070	43580	Urban	0.9053
28260	Dodge County, Nebraska	28	Rural	0.9035	0.9035	99928	Rural	0.9035
28270	Douglas County, Nebraska	5920	Urban	0.9754	0.9754	36540	Urban	0.9754
28280	Dundy County, Nebraska	28	Rural	0.9035	0.9035	99928	Rural	0.9035
28290	Fillmore County, Nebraska	28	Rural	0.9035	0.9035	99928	Rural	0.9035
28300	Franklin County, Nebraska	28	Rural	0.9035	0.9035	99928	Rural	0.9035
28310	Frontier County, Nebraska	28	Rural	0.9035	0.9035	99928	Rural	0.9035
28320	Furnas County, Nebraska	28	Rural	0.9035	0.9035	99928	Rural	0.9035

TABLE 1.—FY 2006 IRF PPS TRANSITION WAGE INDEX TABLE—Continued

[For discharges occurring on or after October 1, 2005 and on or before September 30, 2006]

SSA state/ county code	County name	MSA No.	MSA urban/ rural	2006 MSA-based WI	2006 CBSA-based WI	CBSA No.	CBSA urban/ rural	Transition wage index *
28330	Gage County, Nebraska	28	Rural	0.9035	0.9035	99928	Rural	0.9035
28340	Garden County, Nebraska	28	Rural	0.9035	0.9035	99928	Rural	0.9035
28350	Garfield County, Nebraska	28	Rural	0.9035	0.9035	99928	Rural	0.9035
28360	Gosper County, Nebraska	28	Rural	0.9035	0.9035	99928	Rural	0.9035
28370	Grant County, Nebraska	28	Rural	0.9035	0.9035	99928	Rural	0.9035
28380	Greeley County, Nebraska	28	Rural	0.9035	0.9035	99928	Rural	0.9035
28390	Hall County, Nebraska	28	Rural	0.9035	0.9035	99928	Rural	0.9035
28400	Hamilton County, Nebraska	28	Rural	0.9035	0.9035	99928	Rural	0.9035
28410	Harlan County, Nebraska	28	Rural	0.9035	0.9035	99928	Rural	0.9035
28420	Hayes County, Nebraska	28	Rural	0.9035	0.9035	99928	Rural	0.9035
28430	Hitchcock County, Nebraska	28	Rural	0.9035	0.9035	99928	Rural	0.9035
28440	Holt County, Nebraska	28	Rural	0.9035	0.9035	99928	Rural	0.9035
28450	Hooker County, Nebraska	28	Rural	0.9035	0.9035	99928	Rural	0.9035
28460	Howard County, Nebraska	28	Rural	0.9035	0.9035	99928	Rural	0.9035
28470	Jefferson County, Nebraska	28	Rural	0.9035	0.9035	99928	Rural	0.9035
28480	Johnson County, Nebraska	28	Rural	0.9035	0.9035	99928	Rural	0.9035
28490	Kearney County, Nebraska	28	Rural	0.9035	0.9035	99928	Rural	0.9035
28500	Keith County, Nebraska	28	Rural	0.9035	0.9035	99928	Rural	0.9035
28510	Keya Paha County, Nebraska	28	Rural	0.9035	0.9035	99928	Rural	0.9035
28520	Kimball County, Nebraska	28	Rural	0.9035	0.9035	99928	Rural	0.9035
28530	Knox County, Nebraska	28	Rural	0.9035	0.9035	99928	Rural	0.9035
28540	Lancaster County, Nebraska	4360	Urban	1.0208	1.0208	30700	Urban	1.0208
28550	Lincoln County, Nebraska	28	Rural	0.9035	0.9035	99928	Rural	0.9035
28560	Logan County, Nebraska	28	Rural	0.9035	0.9035	99928	Rural	0.9035
28570	Loup County, Nebraska	28	Rural	0.9035	0.9035	99928	Rural	0.9035
28580	Mc Pherson County, Nebraska	28	Rural	0.9035	0.9035	99928	Rural	0.9035
28590	Madison County, Nebraska	28	Rural	0.9035	0.9035	99928	Rural	0.9035
28600	Merrick County, Nebraska	28	Rural	0.9035	0.9035	99928	Rural	0.9035
28610	Morrill County, Nebraska	28	Rural	0.9035	0.9035	99928	Rural	0.9035
28620	Nance County, Nebraska	28	Rural	0.9035	0.9035	99928	Rural	0.9035
28630	Nemaha County, Nebraska	28	Rural	0.9035	0.9035	99928	Rural	0.9035
28640	Nuckolls County, Nebraska	28	Rural	0.9035	0.9035	99928	Rural	0.9035
28650	Otoe County, Nebraska	28	Rural	0.9035	0.9035	99928	Rural	0.9035
28660	Pawnee County, Nebraska	28	Rural	0.9035	0.9035	99928	Rural	0.9035
28670	Perkins County, Nebraska	28	Rural	0.9035	0.9035	99928	Rural	0.9035
28680	Phelps County, Nebraska	28	Rural	0.9035	0.9035	99928	Rural	0.9035
28690	Pierce County, Nebraska	28	Rural	0.9035	0.9035	99928	Rural	0.9035
28700	Platte County, Nebraska	28	Rural	0.9035	0.9035	99928	Rural	0.9035
28710	Polk County, Nebraska	28	Rural	0.9035	0.9035	99928	Rural	0.9035
28720	Redwillow County, Nebraska	28	Rural	0.9035	0.9035	99928	Rural	0.9035
28730	Richardson County, Nebraska	28	Rural	0.9035	0.9035	99928	Rural	0.9035
28740	Rock County, Nebraska	28	Rural	0.9035	0.9035	99928	Rural	0.9035
28750	Saline County, Nebraska	28	Rural	0.9035	0.9035	99928	Rural	0.9035
28760	Sarpy County, Nebraska	5920	Urban	0.9754	0.9754	36540	Urban	0.9754
28770	Saunders County, Nebraska	28	Rural	0.9035	0.9754	36540	Urban	0.9395
28780	Scotts Bluff County, Nebraska	28	Rural	0.9035	0.9035	99928	Rural	0.9035
28790	Seward County, Nebraska	28	Rural	0.9035	1.0208	30700	Urban	0.9622
28800	Sheridan County, Nebraska	28	Rural	0.9035	0.9035	99928	Rural	0.9035
28810	Sherman County, Nebraska	28	Rural	0.9035	0.9035	99928	Rural	0.9035
28820	Sioux County, Nebraska	28	Rural	0.9035	0.9035	99928	Rural	0.9035
28830	Stanton County, Nebraska	28	Rural	0.9035	0.9035	99928	Rural	0.9035
28840	Thayer County, Nebraska	28	Rural	0.9035	0.9035	99928	Rural	0.9035
28850	Thomas County, Nebraska	28	Rural	0.9035	0.9035	99928	Rural	0.9035
28860	Thurston County, Nebraska	28	Rural	0.9035	0.9035	99928	Rural	0.9035
28870	Valley County, Nebraska	28	Rural	0.9035	0.9035	99928	Rural	0.9035
28880	Washington County, Nebraska	5920	Urban	0.9754	0.9754	36540	Urban	0.9754
28890	Wayne County, Nebraska	28	Rural	0.9035	0.9035	99928	Rural	0.9035
28900	Webster County, Nebraska	28	Rural	0.9035	0.9035	99928	Rural	0.9035
28910	Wheeler County, Nebraska	28	Rural	0.9035	0.9035	99928	Rural	0.9035
28920	York County, Nebraska	28	Rural	0.9035	0.9035	99928	Rural	0.9035
29000	Churchill County, Nevada	29	Rural	0.9832	0.9280	99929	Rural	0.9556
29010	Clark County, Nevada	4120	Urban	1.1121	1.1378	29820	Urban	1.1250
29020	Douglas County, Nevada	29	Rural	0.9832	0.9280	99929	Rural	0.9556
29030	Elko County, Nevada	29	Rural	0.9832	0.9280	99929	Rural	0.9556
29040	Esmeralda County, Nevada	29	Rural	0.9832	0.9280	99929	Rural	0.9556
29050	Eureka County, Nevada	29	Rural	0.9832	0.9280	99929	Rural	0.9556
29060	Humboldt County, Nevada	29	Rural	0.9832	0.9280	99929	Rural	0.9556
29070	Lander County, Nevada	29	Rural	0.9832	0.9280	99929	Rural	0.9556

TABLE 1.—FY 2006 IRF PPS TRANSITION WAGE INDEX TABLE—Continued

[For discharges occurring on or after October 1, 2005 and on or before September 30, 2006]

SSA state/ county code	County name	MSA No.	MSA urban/ rural	2006 MSA-based WI	2006 CBSA-based WI	CBSA No.	CBSA urban/ rural	Transition wage index *
29080	Lincoln County, Nevada	29	Rural	0.9832	0.9280	99929	Rural	0.9556
29090	Lyon County, Nevada	29	Rural	0.9832	0.9280	99929	Rural	0.9556
29100	Mineral County, Nevada	29	Rural	0.9832	0.9280	99929	Rural	0.9556
29110	Nye County, Nevada	4120	Urban	1.1121	0.9280	99929	Rural	1.0201
29120	Carson City County, Nevada	29	Rural	0.9832	1.0352	16180	Urban	1.0092
29130	Pershing County, Nevada	29	Rural	0.9832	0.9280	99929	Rural	0.9556
29140	Storey County, Nevada	29	Rural	0.9832	1.0456	39900	Urban	1.0144
29150	Washoe County, Nevada	6720	Urban	1.0456	1.0456	39900	Urban	1.0456
29160	White Pine County, Nevada	29	Rural	0.9832	0.9280	99929	Rural	0.9556
30000	Belknap County, New Hampshire	30	Rural	0.9940	0.9940	99930	Rural	0.9940
30010	Carroll County, New Hampshire	30	Rural	0.9940	0.9940	99930	Rural	0.9940
30020	Cheshire County, New Hampshire	30	Rural	0.9940	0.9940	99930	Rural	0.9940
30030	Coos County, New Hampshire	30	Rural	0.9940	0.9940	99930	Rural	0.9940
30040	Grafton County, New Hampshire	30	Rural	0.9940	0.9940	99930	Rural	0.9940
30050	Hillsboro County, New Hampshire	1123	Urban	1.1290	1.0642	31700	Urban	1.0966
30060	Merrimack County, New Hampshire	1123	Urban	1.1290	1.0642	31700	Urban	1.0966
30070	Rockingham County, New Hampshire	1123	Urban	1.1290	1.0221	40484	Urban	1.0756
30080	Strafford County, New Hampshire	1123	Urban	1.1290	1.0221	40484	Urban	1.0756
30090	Sullivan County, New Hampshire	30	Rural	0.9940	0.9940	99930	Rural	0.9940
31000	Atlantic County, New Jersey	0560	Urban	1.0907	1.0931	12100	Urban	1.0919
31100	Bergen County, New Jersey	0875	Urban	1.1967	1.3311	35644	Urban	1.2639
31150	Burlington County, New Jersey	6160	Urban	1.0824	1.0675	15804	Urban	1.0750
31160	Camden County, New Jersey	6160	Urban	1.0824	1.0675	15804	Urban	1.0750
31180	Cape May County, New Jersey	0560	Urban	1.0907	1.0810	36140	Urban	1.0859
31190	Cumberland County, New Jersey	8760	Urban	1.0573	1.0573	47220	Urban	1.0573
31200	Essex County, New Jersey	5640	Urban	1.1625	1.1687	35084	Urban	1.1656
31220	Gloucester County, New Jersey	6160	Urban	1.0824	1.0675	15804	Urban	1.0750
31230	Hudson County, New Jersey	3640	Urban	1.0923	1.3311	35644	Urban	1.2117
31250	Hunterdon County, New Jersey	5015	Urban	1.1360	1.1687	35084	Urban	1.1524
31260	Mercer County, New Jersey	8480	Urban	1.0276	1.0276	45940	Urban	1.0276
31270	Middlesex County, New Jersey	5015	Urban	1.1360	1.1136	20764	Urban	1.1248
31290	Monmouth County, New Jersey	5190	Urban	1.0888	1.1136	20764	Urban	1.1012
31300	Morris County, New Jersey	5640	Urban	1.1625	1.1687	35084	Urban	1.1656
31310	Ocean County, New Jersey	5190	Urban	1.0888	1.1136	20764	Urban	1.1012
31320	Passaic County, New Jersey	0875	Urban	1.1967	1.3311	35644	Urban	1.2639
31340	Salem County, New Jersey	6160	Urban	1.0824	1.1049	48864	Urban	1.0937
31350	Somerset County, New Jersey	5015	Urban	1.1360	1.1136	20764	Urban	1.1248
31360	Sussex County, New Jersey	5640	Urban	1.1625	1.1687	35084	Urban	1.1656
31370	Union County, New Jersey	5640	Urban	1.1625	1.1687	35084	Urban	1.1656
31390	Warren County, New Jersey	5640	Urban	1.1625	0.9501	10900	Urban	1.0563
32000	Bernalillo County, New Mexico	0200	Urban	1.0485	1.0485	10740	Urban	1.0485
32010	Catron County, New Mexico	32	Rural	0.8529	0.8680	99932	Rural	0.8605
32020	Chaves County, New Mexico	32	Rural	0.8529	0.8680	99932	Rural	0.8605
32025	Cibola County, New Mexico	32	Rural	0.8529	0.8680	99932	Rural	0.8605
32030	Colfax County, New Mexico	32	Rural	0.8529	0.8680	99932	Rural	0.8605
32040	Curry County, New Mexico	32	Rural	0.8529	0.8680	99932	Rural	0.8605
32050	De Baca County, New Mexico	32	Rural	0.8529	0.8680	99932	Rural	0.8605
32060	Dona Ana County, New Mexico	4100	Urban	0.8784	0.8784	29740	Urban	0.8784
32070	Eddy County, New Mexico	32	Rural	0.8529	0.8680	99932	Rural	0.8605
32080	Grant County, New Mexico	32	Rural	0.8529	0.8680	99932	Rural	0.8605
32090	Guadalupe County, New Mexico	32	Rural	0.8529	0.8680	99932	Rural	0.8605
32100	Harding County, New Mexico	32	Rural	0.8529	0.8680	99932	Rural	0.8605
32110	Hidalgo County, New Mexico	32	Rural	0.8529	0.8680	99932	Rural	0.8605
32120	Lea County, New Mexico	32	Rural	0.8529	0.8680	99932	Rural	0.8605
32130	Lincoln County, New Mexico	32	Rural	0.8529	0.8680	99932	Rural	0.8605
32131	Los Alamos County, New Mexico	7490	Urban	1.0590	0.8680	99932	Rural	0.9635
32140	Luna County, New Mexico	32	Rural	0.8529	0.8680	99932	Rural	0.8605
32150	Mc Kinley County, New Mexico	32	Rural	0.8529	0.8680	99932	Rural	0.8605
32160	Mora County, New Mexico	32	Rural	0.8529	0.8680	99932	Rural	0.8605
32170	Otero County, New Mexico	32	Rural	0.8529	0.8680	99932	Rural	0.8605
32180	Quay County, New Mexico	32	Rural	0.8529	0.8680	99932	Rural	0.8605
32190	Rio Arriba County, New Mexico	32	Rural	0.8529	0.8680	99932	Rural	0.8605
32200	Roosevelt County, New Mexico	32	Rural	0.8529	0.8680	99932	Rural	0.8605
32210	Sandoval County, New Mexico	0200	Urban	1.0485	1.0485	10740	Urban	1.0485
32220	San Juan County, New Mexico	32	Rural	0.8529	0.8049	22140	Urban	0.8289
32230	San Miguel County, New Mexico	32	Rural	0.8529	0.8680	99932	Rural	0.8605
32240	Santa Fe County, New Mexico	7490	Urban	1.0590	1.0909	42140	Urban	1.0750
32250	Sierra County, New Mexico	32	Rural	0.8529	0.8680	99932	Rural	0.8605

TABLE 1.—FY 2006 IRF PPS TRANSITION WAGE INDEX TABLE—Continued

[For discharges occurring on or after October 1, 2005 and on or before September 30, 2006]

SSA state/ county code	County name	MSA No.	MSA urban/ rural	2006 MSA-based WI	2006 CBSA-based WI	CBSA No.	CBSA urban/ rural	Transition wage index *
32260	Socorro County, New Mexico	32	Rural	0.8529	0.8680	99932	Rural	0.8605
32270	Taos County, New Mexico	32	Rural	0.8529	0.8680	99932	Rural	0.8605
32280	Torrance County, New Mexico	32	Rural	0.8529	1.0485	10740	Urban	0.9507
32290	Union County, New Mexico	32	Rural	0.8529	0.8680	99932	Rural	0.8605
32300	Valencia County, New Mexico	0200	Urban	1.0485	1.0485	10740	Urban	1.0485
33000	Albany County, New York	0160	Urban	0.8570	0.8650	10580	Urban	0.8610
33010	Allegany County, New York	33	Rural	0.8403	0.8151	99933	Rural	0.8277
33020	Bronx County, New York	5600	Urban	1.3586	1.3311	35644	Urban	1.3449
33030	Broome County, New York	0960	Urban	0.8447	0.8447	13780	Urban	0.8447
33040	Cattaraugus County, New York	33	Rural	0.8403	0.8151	99933	Rural	0.8277
33050	Cayuga County, New York	8160	Urban	0.9394	0.8151	99933	Rural	0.8773
33060	Chautauqua County, New York	3610	Urban	0.7589	0.8151	99933	Rural	0.7870
33070	Chemung County, New York	2335	Urban	0.8445	0.8445	21300	Urban	0.8445
33080	Chenango County, New York	33	Rural	0.8403	0.8151	99933	Rural	0.8277
33090	Clinton County, New York	33	Rural	0.8403	0.8151	99933	Rural	0.8277
33200	Columbia County, New York	33	Rural	0.8403	0.8151	99933	Rural	0.8277
33210	Cortland County, New York	33	Rural	0.8403	0.8151	99933	Rural	0.8277
33220	Delaware County, New York	33	Rural	0.8403	0.8151	99933	Rural	0.8277
33230	Dutchess County, New York	2281	Urban	1.1657	1.1363	39100	Urban	1.1510
33240	Erie County, New York	1280	Urban	0.9339	0.9339	15380	Urban	0.9339
33260	Essex County, New York	33	Rural	0.8403	0.8151	99933	Rural	0.8277
33270	Franklin County, New York	33	Rural	0.8403	0.8151	99933	Rural	0.8277
33280	Fulton County, New York	33	Rural	0.8403	0.8151	99933	Rural	0.8277
33290	Genesee County, New York	6840	Urban	0.9196	0.8151	99933	Rural	0.8674
33300	Greene County, New York	33	Rural	0.8403	0.8151	99933	Rural	0.8277
33310	Hamilton County, New York	33	Rural	0.8403	0.8151	99933	Rural	0.8277
33320	Herkimer County, New York	8680	Urban	0.8295	0.8295	46540	Urban	0.8295
33330	Jefferson County, New York	33	Rural	0.8403	0.8151	99933	Rural	0.8277
33331	Kings County, New York	5600	Urban	1.3586	1.3311	35644	Urban	1.3449
33340	Lewis County, New York	33	Rural	0.8403	0.8151	99933	Rural	0.8277
33350	Livingston County, New York	6840	Urban	0.9196	0.9281	40380	Urban	0.9239
33360	Madison County, New York	8160	Urban	0.9394	0.9468	45060	Urban	0.9431
33370	Monroe County, New York	6840	Urban	0.9196	0.9281	40380	Urban	0.9239
33380	Montgomery County, New York	0160	Urban	0.8570	0.8151	99933	Rural	0.8361
33400	Nassau County, New York	5380	Urban	1.2907	1.2907	35004	Urban	1.2907
33420	New York County, New York	5600	Urban	1.3586	1.3311	35644	Urban	1.3449
33500	Niagara County, New York	1280	Urban	0.9339	0.9339	15380	Urban	0.9339
33510	Oneida County, New York	8680	Urban	0.8295	0.8295	46540	Urban	0.8295
33520	Onondaga County, New York	8160	Urban	0.9394	0.9468	45060	Urban	0.9431
33530	Ontario County, New York	6840	Urban	0.9196	0.9281	40380	Urban	0.9239
33540	Orange County, New York	5660	Urban	1.1170	1.1363	39100	Urban	1.1267
33550	Orleans County, New York	6840	Urban	0.9196	0.9281	40380	Urban	0.9239
33560	Oswego County, New York	8160	Urban	0.9394	0.9468	45060	Urban	0.9431
33570	Otsego County, New York	33	Rural	0.8403	0.8151	99933	Rural	0.8277
33580	Putnam County, New York	5600	Urban	1.3586	1.3311	35644	Urban	1.3449
33590	Queens County, New York	5600	Urban	1.3586	1.3311	35644	Urban	1.3449
33600	Rensselaer County, New York	0160	Urban	0.8570	0.8650	10580	Urban	0.8610
33610	Richmond County, New York	5600	Urban	1.3586	1.3311	35644	Urban	1.3449
33620	Rockland County, New York	5600	Urban	1.3586	1.3311	35644	Urban	1.3449
33630	St Lawrence County, New York	33	Rural	0.8403	0.8151	99933	Rural	0.8277
33640	Saratoga County, New York	0160	Urban	0.8570	0.8650	10580	Urban	0.8610
33650	Schenectady County, New York	0160	Urban	0.8570	0.8650	10580	Urban	0.8610
33660	Schoharie County, New York	0160	Urban	0.8570	0.8650	10580	Urban	0.8610
33670	Schuyler County, New York	33	Rural	0.8403	0.8151	99933	Rural	0.8277
33680	Seneca County, New York	33	Rural	0.8403	0.8151	99933	Rural	0.8277
33690	Steuben County, New York	33	Rural	0.8403	0.8151	99933	Rural	0.8277
33700	Suffolk County, New York	5380	Urban	1.2907	1.2907	35004	Urban	1.2907
33710	Sullivan County, New York	33	Rural	0.8403	0.8151	99933	Rural	0.8277
33720	Tioga County, New York	0960	Urban	0.8447	0.8447	13780	Urban	0.8447
33730	Tompkins County, New York	33	Rural	0.8403	0.9589	27060	Urban	0.8996
33740	Ulster County, New York	33	Rural	0.8403	0.9000	28740	Urban	0.8702
33750	Warren County, New York	2975	Urban	0.8467	0.8467	24020	Urban	0.8467
33760	Washington County, New York	2975	Urban	0.8467	0.8467	24020	Urban	0.8467
33770	Wayne County, New York	6840	Urban	0.9196	0.9281	40380	Urban	0.9239
33800	Westchester County, New York	5600	Urban	1.3586	1.3311	35644	Urban	1.3449
33900	Wyoming County, New York	33	Rural	0.8403	0.8151	99933	Rural	0.8277
33910	Yates County, New York	33	Rural	0.8403	0.8151	99933	Rural	0.8277
34000	Alamance County, N Carolina	3120	Urban	0.9312	0.8967	15500	Urban	0.9140

TABLE 1.—FY 2006 IRF PPS TRANSITION WAGE INDEX TABLE—Continued

[For discharges occurring on or after October 1, 2005 and on or before September 30, 2006]

SSA state/ county code	County name	MSA No.	MSA urban/ rural	2006 MSA-based WI	2006 CBSA-based WI	CBSA No.	CBSA urban/ rural	Transition wage index *
34010	Alexander County, N Carolina	3290	Urban	0.9502	0.9502	25860	Urban	0.9502
34020	Alleghany County, N Carolina	34	Rural	0.8500	0.8563	99934	Rural	0.8532
34030	Anson County, N Carolina	34	Rural	0.8500	0.9743	16740	Urban	0.9122
34040	Ashe County, N Carolina	34	Rural	0.8500	0.8563	99934	Rural	0.8532
34050	Avery County, N Carolina	34	Rural	0.8500	0.8563	99934	Rural	0.8532
34060	Beaufort County, N Carolina	34	Rural	0.8500	0.8563	99934	Rural	0.8532
34070	Bertie County, N Carolina	34	Rural	0.8500	0.8563	99934	Rural	0.8532
34080	Bladen County, N Carolina	34	Rural	0.8500	0.8563	99934	Rural	0.8532
34090	Brunswick County, N Carolina	9200	Urban	0.9237	0.9237	48900	Urban	0.9237
34100	Buncombe County, N Carolina	0480	Urban	0.9501	0.9191	11700	Urban	0.9346
34110	Burke County, N Carolina	3290	Urban	0.9502	0.9502	25860	Urban	0.9502
34120	Cabarrus County, N Carolina	1520	Urban	0.9711	0.9743	16740	Urban	0.9727
34130	Caldwell County, N Carolina	3290	Urban	0.9502	0.9502	25860	Urban	0.9502
34140	Camden County, N Carolina	34	Rural	0.8500	0.8563	99934	Rural	0.8532
34150	Carteret County, N Carolina	34	Rural	0.8500	0.8563	99934	Rural	0.8532
34160	Caswell County, N Carolina	34	Rural	0.8500	0.8563	99934	Rural	0.8532
34170	Catawba County, N Carolina	3290	Urban	0.9502	0.9502	25860	Urban	0.9502
34180	Chatham County, N Carolina	6640	Urban	1.0258	1.0363	20500	Urban	1.0311
34190	Cherokee County, N Carolina	34	Rural	0.8500	0.8563	99934	Rural	0.8532
34200	Chowan County, N Carolina	34	Rural	0.8500	0.8563	99934	Rural	0.8532
34210	Clay County, N Carolina	34	Rural	0.8500	0.8563	99934	Rural	0.8532
34220	Cleveland County, N Carolina	34	Rural	0.8500	0.8563	99934	Rural	0.8532
34230	Columbus County, N Carolina	34	Rural	0.8500	0.8563	99934	Rural	0.8532
34240	Craven County, N Carolina	34	Rural	0.8500	0.8563	99934	Rural	0.8532
34250	Cumberland County, N Carolina	2560	Urban	0.9363	0.9363	22180	Urban	0.9363
34251	Currituck County, N Carolina	5720	Urban	0.8894	0.8894	47260	Urban	0.8894
34270	Dare County, N Carolina	34	Rural	0.8500	0.8563	99934	Rural	0.8532
34280	Davidson County, N Carolina	3120	Urban	0.9312	0.8563	99934	Rural	0.8938
34290	Davie County, N Carolina	3120	Urban	0.9312	0.9401	49180	Urban	0.9357
34300	Duplin County, N Carolina	34	Rural	0.8500	0.8563	99934	Rural	0.8532
34310	Durham County, N Carolina	6640	Urban	1.0258	1.0363	20500	Urban	1.0311
34320	Edgecombe County, N Carolina	6895	Urban	0.8998	0.8998	40580	Urban	0.8998
34330	Forsyth County, N Carolina	3120	Urban	0.9312	0.9401	49180	Urban	0.9357
34340	Franklin County, N Carolina	6640	Urban	1.0258	1.0057	39580	Urban	1.0158
34350	Gaston County, N Carolina	1520	Urban	0.9711	0.9743	16740	Urban	0.9727
34360	Gates County, N Carolina	34	Rural	0.8500	0.8563	99934	Rural	0.8532
34370	Graham County, N Carolina	34	Rural	0.8500	0.8563	99934	Rural	0.8532
34380	Granville County, N Carolina	34	Rural	0.8500	0.8563	99934	Rural	0.8532
34390	Greene County, N Carolina	34	Rural	0.8500	0.9183	24780	Urban	0.8842
34400	Guilford County, N Carolina	13120	Urban	0.9312	0.9190	24660	Urban	0.9251
34410	Halifax County, N Carolina	34	Rural	0.8500	0.8563	99934	Rural	0.8532
34420	Harnett County, N Carolina	34	Rural	0.8500	0.8563	99934	Rural	0.8532
34430	Haywood County, N Carolina	34	Rural	0.8500	0.9191	11700	Urban	0.8846
34440	Henderson County, N Carolina	34	Rural	0.8500	0.9191	11700	Urban	0.8846
34450	Hertford County, N Carolina	34	Rural	0.8500	0.8563	99934	Rural	0.8532
34460	Hoke County, N Carolina	34	Rural	0.8500	0.9363	22180	Urban	0.8932
34470	Hyde County, N Carolina	34	Rural	0.8500	0.8563	99934	Rural	0.8532
34480	Iredell County, N Carolina	34	Rural	0.8500	0.8563	99934	Rural	0.8532
34490	Jackson County, N Carolina	34	Rural	0.8500	0.8563	99934	Rural	0.8532
34500	Johnston County, N Carolina	6640	Urban	1.0258	1.0057	39580	Urban	1.0158
34510	Jones County, N Carolina	34	Rural	0.8500	0.8563	99934	Rural	0.8532
34520	Lee County, N Carolina	34	Rural	0.8500	0.8563	99934	Rural	0.8532
34530	Lenoir County, N Carolina	34	Rural	0.8500	0.8563	99934	Rural	0.8532
34540	Lincoln County, N Carolina	1520	Urban	0.9711	0.8563	99934	Rural	0.9137
34550	Mc Dowell County, N Carolina	34	Rural	0.8500	0.8563	99934	Rural	0.8532
34560	Macon County, N Carolina	34	Rural	0.8500	0.8563	99934	Rural	0.8532
34570	Madison County, N Carolina	0480	Urban	0.9501	0.9191	11700	Urban	0.9346
34580	Martin County, N Carolina	34	Rural	0.8500	0.8563	99934	Rural	0.8532
34590	Mecklenburg County, N Carolina	1520	Urban	0.9711	0.9743	16740	Urban	0.9727
34600	Mitchell County, N Carolina	34	Rural	0.8500	0.8563	99934	Rural	0.8532
34610	Montgomery County, N Carolina	34	Rural	0.8500	0.8563	99934	Rural	0.8532
34620	Moore County, N Carolina	34	Rural	0.8500	0.8563	99934	Rural	0.8532
34630	Nash County, N Carolina	6895	Urban	0.8998	0.8998	40580	Urban	0.8998
34640	New Hanover County, N Carolina	9200	Urban	0.9237	0.9237	48900	Urban	0.9237
34650	Northampton County, N Carolina	34	Rural	0.8500	0.8563	99934	Rural	0.8532
34660	Onslow County, N Carolina	3605	Urban	0.8401	0.8401	27340	Urban	0.8401
34670	Orange County, N Carolina	6640	Urban	1.0258	1.0363	20500	Urban	1.0311
34680	Pamlico County, N Carolina	34	Rural	0.8500	0.8563	99934	Rural	0.8532

TABLE 1.—FY 2006 IRF PPS TRANSITION WAGE INDEX TABLE—Continued

[For discharges occurring on or after October 1, 2005 and on or before September 30, 2006]

SSA state/ county code	County name	MSA No.	MSA urban/ rural	2006 MSA-based WI	2006 CBSA-based WI	CBSA No.	CBSA urban/ rural	Transition wage index *
34690	Pasquotank County, N Carolina	34	Rural	0.8500	0.8563	99934	Rural	0.8532
34700	Pender County, N Carolina	34	Rural	0.8500	0.9237	48900	Urban	0.8869
34710	Perquimans County, N Carolina	34	Rural	0.8500	0.8563	99934	Rural	0.8532
34720	Person County, N Carolina	34	Rural	0.8500	1.0363	20500	Urban	0.9432
34730	Pitt County, N Carolina	3150	Urban	0.9183	0.9183	24780	Urban	0.9183
34740	Polk County, N Carolina	34	Rural	0.8500	0.8563	99934	Rural	0.8532
34750	Randolph County, N Carolina	3120	Urban	0.9312	0.9190	24660	Urban	0.9251
34760	Richmond County, N Carolina	34	Rural	0.8500	0.8563	99934	Rural	0.8532
34770	Robeson County, N Carolina	34	Rural	0.8500	0.8563	99934	Rural	0.8532
34780	Rockingham County, N Carolina	34	Rural	0.8500	0.9190	24660	Urban	0.8845
34790	Rowan County, N Carolina	1520	Urban	0.9711	0.8563	99934	Rural	0.9137
34800	Rutherford County, N Carolina	34	Rural	0.8500	0.8563	99934	Rural	0.8532
34810	Sampson County, N Carolina	34	Rural	0.8500	0.8563	99934	Rural	0.8532
34820	Scotland County, N Carolina	34	Rural	0.8500	0.8563	99934	Rural	0.8532
34830	Stanly County, N Carolina	34	Rural	0.8500	0.8563	99934	Rural	0.8532
34840	Stokes County, N Carolina	3120	Urban	0.9312	0.9401	49180	Urban	0.9357
34850	Surry County, N Carolina	34	Rural	0.8500	0.8563	99934	Rural	0.8532
34860	Swain County, N Carolina	34	Rural	0.8500	0.8563	99934	Rural	0.8532
34870	Transylvania County, N Carolina	34	Rural	0.8500	0.8563	99934	Rural	0.8532
34880	Tyrrell County, N Carolina	34	Rural	0.8500	0.8563	99934	Rural	0.8532
34890	Union County, N Carolina	1520	Urban	0.9711	0.9743	16740	Urban	0.9727
34900	Vance County, N Carolina	34	Rural	0.8500	0.8563	99934	Rural	0.8532
34910	Wake County, N Carolina	6640	Urban	1.0258	1.0057	39580	Urban	1.0158
34920	Warren County, N Carolina	34	Rural	0.8500	0.8563	99934	Rural	0.8532
34930	Washington County, N Carolina	34	Rural	0.8500	0.8563	99934	Rural	0.8532
34940	Watauga County, N Carolina	34	Rural	0.8500	0.8563	99934	Rural	0.8532
34950	Wayne County, N Carolina	2980	Urban	0.8778	0.8778	24140	Urban	0.8778
34960	Wilkes County, N Carolina	34	Rural	0.8500	0.8563	99934	Rural	0.8532
34970	Wilson County, N Carolina	34	Rural	0.8500	0.8563	99934	Rural	0.8532
34980	Yadkin County, N Carolina	3120	Urban	0.9312	0.9401	49180	Urban	0.9357
34981	Yancey County, N Carolina	34	Rural	0.8500	0.8563	99934	Rural	0.8532
35000	Adams County, N Dakota	35	Rural	0.7743	0.7743	99935	Rural	0.7743
35010	Barnes County, N Dakota	35	Rural	0.7743	0.7743	99935	Rural	0.7743
35020	Benson County, N Dakota	35	Rural	0.7743	0.7743	99935	Rural	0.7743
35030	Billings County, N Dakota	35	Rural	0.7743	0.7743	99935	Rural	0.7743
35040	Bottineau County, N Dakota	35	Rural	0.7743	0.7743	99935	Rural	0.7743
35050	Bowman County, N Dakota	35	Rural	0.7743	0.7743	99935	Rural	0.7743
35060	Burke County, N Dakota	35	Rural	0.7743	0.7743	99935	Rural	0.7743
35070	Burleigh County, N Dakota	1010	Urban	0.7505	0.7505	13900	Urban	0.7505
35080	Cass County, N Dakota	2520	Urban	0.9114	0.9114	22020	Urban	0.9114
35090	Cavalier County, N Dakota	35	Rural	0.7743	0.7743	99935	Rural	0.7743
35100	Dickey County, N Dakota	35	Rural	0.7743	0.7743	99935	Rural	0.7743
35110	Divide County, N Dakota	35	Rural	0.7743	0.7743	99935	Rural	0.7743
35120	Dunn County, N Dakota	35	Rural	0.7743	0.7743	99935	Rural	0.7743
35130	Eddy County, N Dakota	35	Rural	0.7743	0.7743	99935	Rural	0.7743
35140	Emmons County, N Dakota	35	Rural	0.7743	0.7743	99935	Rural	0.7743
35150	Foster County, N Dakota	35	Rural	0.7743	0.7743	99935	Rural	0.7743
35160	Golden Valley County, N Dakota	35	Rural	0.7743	0.7743	99935	Rural	0.7743
35170	Grand Forks County, N Dakota	2985	Urban	0.9091	0.9091	24220	Urban	0.9091
35180	Grant County, N Dakota	35	Rural	0.7743	0.7743	99935	Rural	0.7743
35190	Griggs County, N Dakota	35	Rural	0.7743	0.7743	99935	Rural	0.7743
35200	Hettinger County, N Dakota	35	Rural	0.7743	0.7743	99935	Rural	0.7743
35210	Kidder County, N Dakota	35	Rural	0.7743	0.7743	99935	Rural	0.7743
35220	La Moure County, N Dakota	35	Rural	0.7743	0.7743	99935	Rural	0.7743
35230	Logan County, N Dakota	35	Rural	0.7743	0.7743	99935	Rural	0.7743
35240	Mc Henry County, N Dakota	35	Rural	0.7743	0.7743	99935	Rural	0.7743
35250	Mc Intosh County, N Dakota	35	Rural	0.7743	0.7743	99935	Rural	0.7743
35260	Mc Kenzie County, N Dakota	35	Rural	0.7743	0.7743	99935	Rural	0.7743
35270	Mc Lean County, N Dakota	35	Rural	0.7743	0.7743	99935	Rural	0.7743
35280	Mercer County, N Dakota	35	Rural	0.7743	0.7743	99935	Rural	0.7743
35290	Morton County, N Dakota	1010	Urban	0.7505	0.7505	13900	Urban	0.7505
35300	Mountrail County, N Dakota	35	Rural	0.7743	0.7743	99935	Rural	0.7743
35310	Nelson County, N Dakota	35	Rural	0.7743	0.7743	99935	Rural	0.7743
35320	Oliver County, N Dakota	35	Rural	0.7743	0.7743	99935	Rural	0.7743
35330	Pembina County, N Dakota	35	Rural	0.7743	0.7743	99935	Rural	0.7743
35340	Pierce County, N Dakota	35	Rural	0.7743	0.7743	99935	Rural	0.7743
35350	Ramsey County, N Dakota	35	Rural	0.7743	0.7743	99935	Rural	0.7743
35360	Ransom County, N Dakota	35	Rural	0.7743	0.7743	99935	Rural	0.7743

TABLE 1.—FY 2006 IRF PPS TRANSITION WAGE INDEX TABLE—Continued

[For discharges occurring on or after October 1, 2005 and on or before September 30, 2006]

SSA state/ county code	County name	MSA No.	MSA urban/ rural	2006 MSA-based WI	2006 CBSA-based WI	CBSA No.	CBSA urban/ rural	Transition wage index *
35370	Renville County, N Dakota	35	Rural	0.7743	0.7743	99935	Rural	0.7743
35380	Richland County, N Dakota	35	Rural	0.7743	0.7743	99935	Rural	0.7743
35390	Rolette County, N Dakota	35	Rural	0.7743	0.7743	99935	Rural	0.7743
35400	Sargent County, N Dakota	35	Rural	0.7743	0.7743	99935	Rural	0.7743
35410	Sheridan County, N Dakota	35	Rural	0.7743	0.7743	99935	Rural	0.7743
35420	Sioux County, N Dakota	35	Rural	0.7743	0.7743	99935	Rural	0.7743
35430	Slope County, N Dakota	35	Rural	0.7743	0.7743	99935	Rural	0.7743
35440	Stark County, N Dakota	35	Rural	0.7743	0.7743	99935	Rural	0.7743
35450	Steele County, N Dakota	35	Rural	0.7743	0.7743	99935	Rural	0.7743
35460	Stutsman County, N Dakota	35	Rural	0.7743	0.7743	99935	Rural	0.7743
35470	Towner County, N Dakota	35	Rural	0.7743	0.7743	99935	Rural	0.7743
35480	Traill County, N Dakota	35	Rural	0.7743	0.7743	99935	Rural	0.7743
35490	Walsh County, N Dakota	35	Rural	0.7743	0.7743	99935	Rural	0.7743
35500	Ward County, N Dakota	35	Rural	0.7743	0.7743	99935	Rural	0.7743
35510	Wells County, N Dakota	35	Rural	0.7743	0.7743	99935	Rural	0.7743
35520	Williams County, N Dakota	35	Rural	0.7743	0.7743	99935	Rural	0.7743
36000	Adams County, Ohio	36	Rural	0.8759	0.8693	99936	Rural	0.8726
36010	Allen County, Ohio	4320	Urban	0.9258	0.9330	30620	Urban	0.9294
36020	Ashland County, Ohio	36	Rural	0.8759	0.8693	99936	Rural	0.8726
36030	Ashtabula County, Ohio	1680	Urban	0.9626	0.8693	99936	Rural	0.9160
36040	Athens County, Ohio	36	Rural	0.8759	0.8693	99936	Rural	0.8726
36050	Auglaize County, Ohio	4320	Urban	0.9258	0.8693	99936	Rural	0.8976
36060	Belmont County, Ohio	9000	Urban	0.7449	0.7449	48540	Urban	0.7449
36070	Brown County, Ohio	1640	Urban	0.9595	0.9516	17140	Urban	0.9556
36080	Butler County, Ohio	3200	Urban	0.9066	0.9516	17140	Urban	0.9291
36090	Carroll County, Ohio	1320	Urban	0.8895	0.8895	15940	Urban	0.8895
36100	Champaign County, Ohio	36	Rural	0.8759	0.8693	99936	Rural	0.8726
36110	Clark County, Ohio	2000	Urban	0.9231	0.8748	44220	Urban	0.8990
36120	Clermont County, Ohio	1640	Urban	0.9595	0.9516	17140	Urban	0.9556
36130	Clinton County, Ohio	36	Rural	0.8759	0.8693	99936	Rural	0.8726
36140	Columbiana County, Ohio	9320	Urban	0.9517	0.8693	99936	Rural	0.9105
36150	Coshocton County, Ohio	36	Rural	0.8759	0.8693	99936	Rural	0.8726
36160	Crawford County, Ohio	4800	Urban	0.9105	0.8693	99936	Rural	0.8899
36170	Cuyahoga County, Ohio	1680	Urban	0.9626	0.9650	17460	Urban	0.9638
36190	Darke County, Ohio	36	Rural	0.8759	0.8693	99936	Rural	0.8726
36200	Defiance County, Ohio	36	Rural	0.8759	0.8693	99936	Rural	0.8726
36210	Delaware County, Ohio	1840	Urban	0.9753	0.9737	18140	Urban	0.9745
36220	Erie County, Ohio	36	Rural	0.8759	0.9017	41780	Urban	0.8888
36230	Fairfield County, Ohio	1840	Urban	0.9753	0.9737	18140	Urban	0.9745
36240	Fayette County, Ohio	36	Rural	0.8759	0.8693	99936	Rural	0.8726
36250	Franklin County, Ohio	1840	Urban	0.9753	0.9737	18140	Urban	0.9745
36260	Fulton County, Ohio	8400	Urban	0.9524	0.9524	45780	Urban	0.9524
36270	Gallia County, Ohio	36	Rural	0.8759	0.8693	99936	Rural	0.8726
36280	Geauga County, Ohio	1680	Urban	0.9626	0.9650	17460	Urban	0.9638
36290	Greene County, Ohio	2000	Urban	0.9231	0.9303	19380	Urban	0.9267
36300	Guernsey County, Ohio	36	Rural	0.8759	0.8693	99936	Rural	0.8726
36310	Hamilton County, Ohio	1640	Urban	0.9595	0.9516	17140	Urban	0.9556
36330	Hancock County, Ohio	36	Rural	0.8759	0.8693	99936	Rural	0.8726
36340	Hardin County, Ohio	36	Rural	0.8759	0.8693	99936	Rural	0.8726
36350	Harrison County, Ohio	36	Rural	0.8759	0.8693	99936	Rural	0.8726
36360	Henry County, Ohio	36	Rural	0.8759	0.8693	99936	Rural	0.8726
36370	Highland County, Ohio	36	Rural	0.8759	0.8693	99936	Rural	0.8726
36380	Hocking County, Ohio	36	Rural	0.8759	0.8693	99936	Rural	0.8726
36390	Holmes County, Ohio	36	Rural	0.8759	0.8693	99936	Rural	0.8726
36400	Huron County, Ohio	36	Rural	0.8759	0.8693	99936	Rural	0.8726
36410	Jackson County, Ohio	36	Rural	0.8759	0.8693	99936	Rural	0.8726
36420	Jefferson County, Ohio	8080	Urban	0.8280	0.8280	48260	Urban	0.8280
36430	Knox County, Ohio	36	Rural	0.8759	0.8693	99936	Rural	0.8726
36440	Lake County, Ohio	1680	Urban	0.9626	0.9650	17460	Urban	0.9638
36450	Lawrence County, Ohio	3400	Urban	0.9564	0.9564	26580	Urban	0.9564
36460	Licking County, Ohio	1840	Urban	0.9753	0.9737	18140	Urban	0.9745
36470	Logan County, Ohio	36	Rural	0.8759	0.8693	99936	Rural	0.8726
36480	Lorain County, Ohio	1680	Urban	0.9626	0.9650	17460	Urban	0.9638
36490	Lucas County, Ohio	8400	Urban	0.9524	0.9524	45780	Urban	0.9524
36500	Madison County, Ohio	1840	Urban	0.9753	0.9737	18140	Urban	0.9745
36510	Mahoning County, Ohio	9320	Urban	0.9517	0.9237	49660	Urban	0.9377
36520	Marion County, Ohio	36	Rural	0.8759	0.8693	99936	Rural	0.8726
36530	Medina County, Ohio	1680	Urban	0.9626	0.9650	17460	Urban	0.9638

TABLE 1.—FY 2006 IRF PPS TRANSITION WAGE INDEX TABLE—Continued

[For discharges occurring on or after October 1, 2005 and on or before September 30, 2006]

SSA state/ county code	County name	MSA No.	MSA urban/ rural	2006 MSA-based WI	2006 CBSA-based WI	CBSA No.	CBSA urban/ rural	Transition wage index *
36540	Meigs County, Ohio	36	Rural	0.8759	0.8693	99936	Rural	0.8726
36550	Mercer County, Ohio	36	Rural	0.8759	0.8693	99936	Rural	0.8726
36560	Miami County, Ohio	2000	Urban	0.9231	0.9303	19380	Urban	0.9267
36570	Monroe County, Ohio	36	Rural	0.8759	0.8693	99936	Rural	0.8726
36580	Montgomery County, Ohio	2000	Urban	0.9231	0.9303	19380	Urban	0.9267
36590	Morgan County, Ohio	36	Rural	0.8759	0.8693	99936	Rural	0.8726
36600	Morrow County, Ohio	36	Rural	0.8759	0.9737	18140	Urban	0.9248
36610	Muskingum County, Ohio	36	Rural	0.8759	0.8693	99936	Rural	0.8726
36620	Noble County, Ohio	36	Rural	0.8759	0.8693	99936	Rural	0.8726
36630	Ottawa County, Ohio	36	Rural	0.8759	0.9524	45780	Urban	0.9142
36640	Paulding County, Ohio	36	Rural	0.8759	0.8693	99936	Rural	0.8726
36650	Perry County, Ohio	36	Rural	0.8759	0.8693	99936	Rural	0.8726
36660	Pickaway County, Ohio	1840	Urban	0.9753	0.9737	18140	Urban	0.9745
36670	Pike County, Ohio	36	Rural	0.8759	0.8693	99936	Rural	0.8726
36680	Portage County, Ohio	0080	Urban	0.9055	0.9055	10420	Urban	0.9055
36690	Preble County, Ohio	36	Rural	0.8759	0.9303	19380	Urban	0.9031
36700	Putnam County, Ohio	36	Rural	0.8759	0.8693	99936	Rural	0.8726
36710	Richland County, Ohio	4800	Urban	0.9105	0.9189	31900	Urban	0.9147
36720	Ross County, Ohio	36	Rural	0.8759	0.8693	99936	Rural	0.8726
36730	Sandusky County, Ohio	36	Rural	0.8759	0.8693	99936	Rural	0.8726
36740	Scioto County, Ohio	36	Rural	0.8759	0.8693	99936	Rural	0.8726
36750	Seneca County, Ohio	36	Rural	0.8759	0.8693	99936	Rural	0.8726
36760	Shelby County, Ohio	36	Rural	0.8759	0.8693	99936	Rural	0.8726
36770	Stark County, Ohio	1320	Urban	0.8895	0.8895	15940	Urban	0.8895
36780	Summit County, Ohio	0080	Urban	0.9055	0.9055	10420	Urban	0.9055
36790	Trumbull County, Ohio	9320	Urban	0.9517	0.9237	49660	Urban	0.9377
36800	Tuscarawas County, Ohio	36	Rural	0.8759	0.8693	99936	Rural	0.8726
36810	Union County, Ohio	36	Rural	0.8759	0.9737	18140	Urban	0.9248
36820	Van Wert County, Ohio	36	Rural	0.8759	0.8693	99936	Rural	0.8726
36830	Vinton County, Ohio	36	Rural	0.8759	0.8693	99936	Rural	0.8726
36840	Warren County, Ohio	1640	Urban	0.9595	0.9516	17140	Urban	0.9556
36850	Washington County, Ohio	6020	Urban	0.8288	0.8288	37620	Urban	0.8288
36860	Wayne County, Ohio	36	Rural	0.8759	0.8693	99936	Rural	0.8726
36870	Williams County, Ohio	36	Rural	0.8759	0.8693	99936	Rural	0.8726
36880	Wood County, Ohio	8400	Urban	0.9524	0.9524	45780	Urban	0.9524
36890	Wyandot County, Ohio	36	Rural	0.8759	0.8693	99936	Rural	0.8726
37000	Adair County, Oklahoma	37	Rural	0.7537	0.7686	99937	Rural	0.7612
37101	Alfalfa County, Oklahoma	37	Rural	0.7537	0.7686	99937	Rural	0.7612
37020	Atoka County, Oklahoma	37	Rural	0.7537	0.7686	99937	Rural	0.7612
37030	Beaver County, Oklahoma	37	Rural	0.7537	0.7686	99937	Rural	0.7612
37040	Beckham County, Oklahoma	37	Rural	0.7537	0.7686	99937	Rural	0.7612
37050	Blaine County, Oklahoma	37	Rural	0.7537	0.7686	99937	Rural	0.7612
37060	Bryan County, Oklahoma	37	Rural	0.7537	0.7686	99937	Rural	0.7612
37070	Caddo County, Oklahoma	37	Rural	0.7537	0.7686	99937	Rural	0.7612
37080	Canadian County, Oklahoma	5880	Urban	0.8966	0.8982	36420	Urban	0.8974
37090	Carter County, Oklahoma	37	Rural	0.7537	0.7686	99937	Rural	0.7612
37100	Cherokee County, Oklahoma	37	Rural	0.7537	0.7686	99937	Rural	0.7612
37110	Choctaw County, Oklahoma	37	Rural	0.7537	0.7686	99937	Rural	0.7612
37120	Cimarron County, Oklahoma	37	Rural	0.7537	0.7686	99937	Rural	0.7612
37130	Cleveland County, Oklahoma	5880	Urban	0.8966	0.8982	36420	Urban	0.8974
37140	Coal County, Oklahoma	37	Rural	0.7537	0.7686	99937	Rural	0.7612
37150	Comanche County, Oklahoma	4200	Urban	0.8212	0.8212	30020	Urban	0.8212
37160	Cotton County, Oklahoma	37	Rural	0.7537	0.7686	99937	Rural	0.7612
37170	Craig County, Oklahoma	37	Rural	0.7537	0.7686	99937	Rural	0.7612
37180	Creek County, Oklahoma	8560	Urban	0.8729	0.8690	46140	Urban	0.8710
37190	Custer County, Oklahoma	37	Rural	0.7537	0.7686	99937	Rural	0.7612
37200	Delaware County, Oklahoma	37	Rural	0.7537	0.7686	99937	Rural	0.7612
37210	Dewey County, Oklahoma	37	Rural	0.7537	0.7686	99937	Rural	0.7612
37220	Ellis County, Oklahoma	37	Rural	0.7537	0.7686	99937	Rural	0.7612
37230	Garfield County, Oklahoma	2340	Urban	0.9001	0.7686	99937	Rural	0.8344
37240	Garvin County, Oklahoma	37	Rural	0.7537	0.7686	99937	Rural	0.7612
37250	Grady County, Oklahoma	37	Rural	0.7537	0.8982	36420	Urban	0.8260
37260	Grant County, Oklahoma	37	Rural	0.7537	0.7686	99937	Rural	0.7612
37270	Greer County, Oklahoma	37	Rural	0.7537	0.7686	99937	Rural	0.7612
37280	Harmon County, Oklahoma	37	Rural	0.7537	0.7686	99937	Rural	0.7612
37290	Harper County, Oklahoma	37	Rural	0.7537	0.7686	99937	Rural	0.7612
37300	Haskell County, Oklahoma	37	Rural	0.7537	0.7686	99937	Rural	0.7612
37310	Hughes County, Oklahoma	37	Rural	0.7537	0.7686	99937	Rural	0.7612

TABLE 1.—FY 2006 IRF PPS TRANSITION WAGE INDEX TABLE—Continued

[For discharges occurring on or after October 1, 2005 and on or before September 30, 2006]

SSA state/ county code	County name	MSA No.	MSA urban/ rural	2006 MSA-based WI	2006 CBSA-based WI	CBSA No.	CBSA urban/ rural	Transition wage index *
37320	Jackson County, Oklahoma	37	Rural	0.7537	0.7686	99937	Rural	0.7612
37330	Jefferson County, Oklahoma	37	Rural	0.7537	0.7686	99937	Rural	0.7612
37340	Johnston County, Oklahoma	37	Rural	0.7537	0.7686	99937	Rural	0.7612
37350	Kay County, Oklahoma	37	Rural	0.7537	0.7686	99937	Rural	0.7612
37360	Kingfisher County, Oklahoma	37	Rural	0.7537	0.7686	99937	Rural	0.7612
37370	Kiowa County, Oklahoma	37	Rural	0.7537	0.7686	99937	Rural	0.7612
37380	Latimer County, Oklahoma	37	Rural	0.7537	0.7686	99937	Rural	0.7612
37390	Le Flore County, Oklahoma	37	Rural	0.7537	0.8283	22900	Urban	0.7910
37400	Lincoln County, Oklahoma	37	Rural	0.7537	0.8982	36420	Urban	0.8260
37410	Logan County, Oklahoma	5880	Urban	0.8966	0.8982	36420	Urban	0.8974
37420	Love County, Oklahoma	37	Rural	0.7537	0.7686	99937	Rural	0.7612
37430	Mc Clain County, Oklahoma	5880	Urban	0.8966	0.8982	36420	Urban	0.8974
37440	Mc Curtain County, Oklahoma	37	Rural	0.7537	0.7686	99937	Rural	0.7612
37450	Mc Intosh County, Oklahoma	37	Rural	0.7537	0.7686	99937	Rural	0.7612
37460	Major County, Oklahoma	37	Rural	0.7537	0.7686	99937	Rural	0.7612
37470	Marshall County, Oklahoma	37	Rural	0.7537	0.7686	99937	Rural	0.7612
37480	Mayes County, Oklahoma	37	Rural	0.7537	0.7686	99937	Rural	0.7612
37490	Murray County, Oklahoma	37	Rural	0.7537	0.7686	99937	Rural	0.7612
37500	Muskogee County, Oklahoma	37	Rural	0.7537	0.7686	99937	Rural	0.7612
37510	Noble County, Oklahoma	37	Rural	0.7537	0.7686	99937	Rural	0.7612
37520	Nowata County, Oklahoma	37	Rural	0.7537	0.7686	99937	Rural	0.7612
37530	Okfuskee County, Oklahoma	37	Rural	0.7537	0.7686	99937	Rural	0.7612
37540	Oklahoma County, Oklahoma	5880	Urban	0.8966	0.8982	36420	Urban	0.8974
37550	Okmulgee County, Oklahoma	37	Rural	0.7537	0.8690	46140	Urban	0.8114
37560	Osage County, Oklahoma	8560	Urban	0.8729	0.8690	46140	Urban	0.8710
37570	Ottawa County, Oklahoma	37	Rural	0.7537	0.7686	99937	Rural	0.7612
37580	Pawnee County, Oklahoma	37	Rural	0.7537	0.8690	46140	Urban	0.8114
37590	Payne County, Oklahoma	37	Rural	0.7537	0.7686	99937	Rural	0.7612
37600	Pittsburg County, Oklahoma	37	Rural	0.7537	0.7686	99937	Rural	0.7612
37610	Pontotoc County, Oklahoma	37	Rural	0.7537	0.7686	99937	Rural	0.7612
37620	Pottawatomie County, Oklahoma	5880	Urban	0.8966	0.7686	99937	Rural	0.8326
37630	Pushmataha County, Oklahoma	37	Rural	0.7537	0.7686	99937	Rural	0.7612
37640	Roger Mills County, Oklahoma	37	Rural	0.7537	0.7686	99937	Rural	0.7612
37650	Rogers County, Oklahoma	8560	Urban	0.8729	0.8690	46140	Urban	0.8710
37660	Seminole County, Oklahoma	37	Rural	0.7537	0.7686	99937	Rural	0.7612
37670	Sequoyah County, Oklahoma	2720	Urban	0.8303	0.8283	22900	Urban	0.8293
37680	Stephens County, Oklahoma	37	Rural	0.7537	0.7686	99937	Rural	0.7612
37690	Texas County, Oklahoma	37	Rural	0.7537	0.7686	99937	Rural	0.7612
37700	Tillman County, Oklahoma	37	Rural	0.7537	0.7686	99937	Rural	0.7612
37710	Tulsa County, Oklahoma	8560	Urban	0.8729	0.8690	46140	Urban	0.8710
37720	Wagoner County, Oklahoma	8560	Urban	0.8729	0.8690	46140	Urban	0.8710
37730	Washington County, Oklahoma	37	Rural	0.7537	0.7686	99937	Rural	0.7612
37740	Washita County, Oklahoma	37	Rural	0.7537	0.7686	99937	Rural	0.7612
37750	Woods County, Oklahoma	37	Rural	0.7537	0.7686	99937	Rural	0.7612
37760	Woodward County, Oklahoma	37	Rural	0.7537	0.7686	99937	Rural	0.7612
38000	Baker County, Oregon	38	Rural	1.0049	0.9914	99938	Rural	0.9982
38010	Benton County, Oregon	1890	Urban	1.0545	1.0545	18700	Urban	1.0545
38020	Clackamas County, Oregon	6440	Urban	1.1403	1.1403	38900	Urban	1.1403
38030	Clatsop County, Oregon	38	Rural	1.0049	0.9914	99938	Rural	0.9982
38040	Columbia County, Oregon	6440	Urban	1.1403	1.1403	38900	Urban	1.1403
38050	Coos County, Oregon	38	Rural	1.0049	0.9914	99938	Rural	0.9982
38060	Crook County, Oregon	38	Rural	1.0049	0.9914	99938	Rural	0.9982
38070	Curry County, Oregon	38	Rural	1.0049	0.9914	99938	Rural	0.9982
38080	Deschutes County, Oregon	38	Rural	1.0049	1.0603	13460	Urban	1.0326
38090	Douglas County, Oregon	38	Rural	1.0049	0.9914	99938	Rural	0.9982
38100	Gilliam County, Oregon	38	Rural	1.0049	0.9914	99938	Rural	0.9982
38110	Grant County, Oregon	38	Rural	1.0049	0.9914	99938	Rural	0.9982
38120	Harney County, Oregon	38	Rural	1.0049	0.9914	99938	Rural	0.9982
38130	Hood River County, Oregon	38	Rural	1.0049	0.9914	99938	Rural	0.9982
38140	Jackson County, Oregon	4890	Urban	1.0534	1.0534	32780	Urban	1.0534
38150	Jefferson County, Oregon	38	Rural	1.0049	0.9914	99938	Rural	0.9982
38160	Josephine County, Oregon	38	Rural	1.0049	0.9914	99938	Rural	0.9982
38170	Klamath County, Oregon	38	Rural	1.0049	0.9914	99938	Rural	0.9982
38180	Lake County, Oregon	38	Rural	1.0049	0.9914	99938	Rural	0.9982
38190	Lane County, Oregon	2400	Urban	1.0940	1.0940	21660	Urban	1.0940
38200	Lincoln County, Oregon	38	Rural	1.0049	0.9914	99938	Rural	0.9982
38210	Linn County, Oregon	38	Rural	1.0049	0.9914	99938	Rural	0.9982
38220	Malheur County, Oregon	38	Rural	1.0049	0.9914	99938	Rural	0.9982

TABLE 1.—FY 2006 IRF PPS TRANSITION WAGE INDEX TABLE—Continued

[For discharges occurring on or after October 1, 2005 and on or before September 30, 2006]

SSA state/ county code	County name	MSA No.	MSA urban/ rural	2006 MSA-based WI	2006 CBSA-based WI	CBSA No.	CBSA urban/ rural	Transition wage index *
38230	Marion County, Oregon	7080	Urban	1.0556	1.0556	41420	Urban	1.0556
38240	Morrow County, Oregon	38	Rural	1.0049	0.9914	99938	Rural	0.9982
38250	Multnomah County, Oregon	6440	Urban	1.1403	1.1403	38900	Urban	1.1403
38260	Polk County, Oregon	7080	Urban	1.0556	1.0556	41420	Urban	1.0556
38270	Sherman County, Oregon	38	Rural	1.0049	0.9914	99938	Rural	0.9982
38280	Tillamook County, Oregon	38	Rural	1.0049	0.9914	99938	Rural	0.9982
38290	Umatilla County, Oregon	38	Rural	1.0049	0.9914	99938	Rural	0.9982
38300	Union County, Oregon	38	Rural	1.0049	0.9914	99938	Rural	0.9982
38310	Wallowa County, Oregon	38	Rural	1.0049	0.9914	99938	Rural	0.9982
38320	Wasco County, Oregon	38	Rural	1.0049	0.9914	99938	Rural	0.9982
38330	Washington County, Oregon	6440	Urban	1.1403	1.1403	38900	Urban	1.1403
38340	Wheeler County, Oregon	38	Rural	1.0049	0.9914	99938	Rural	0.9982
38350	Yamhill County, Oregon	6440	Urban	1.1403	1.1403	38900	Urban	1.1403
39000	Adams County, Pennsylvania	39	Rural	0.8348	0.8310	99939	Rural	0.8329
39010	Allegheny County, Pennsylvania	6280	Urban	0.8756	0.8736	38300	Urban	0.8746
39070	Armstrong County, Pennsylvania	39	Rural	0.8348	0.8736	38300	Urban	0.8542
39080	Beaver County, Pennsylvania	6280	Urban	0.8756	0.8736	38300	Urban	0.8746
39100	Bedford County, Pennsylvania	39	Rural	0.8348	0.8310	99939	Rural	0.8329
39110	Berks County, Pennsylvania	6680	Urban	0.9215	0.9215	39740	Urban	0.9215
39120	Blair County, Pennsylvania	0280	Urban	0.8462	0.8462	11020	Urban	0.8462
39130	Bradford County, Pennsylvania	39	Rural	0.8348	0.8310	99939	Rural	0.8329
39140	Bucks County, Pennsylvania	6160	Urban	1.0824	1.0865	37964	Urban	1.0845
39150	Butler County, Pennsylvania	6280	Urban	0.8756	0.8736	38300	Urban	0.8746
39160	Cambria County, Pennsylvania	3680	Urban	0.7980	0.8380	27780	Urban	0.8180
39180	Cameron County, Pennsylvania	39	Rural	0.8348	0.8310	99939	Rural	0.8329
39190	Carbon County, Pennsylvania	0240	Urban	0.9536	0.9501	10900	Urban	0.9519
39200	Centre County, Pennsylvania	8050	Urban	0.8461	0.8461	44300	Urban	0.8461
39210	Chester County, Pennsylvania	6160	Urban	1.0824	1.0865	37964	Urban	1.0845
39220	Clarion County, Pennsylvania	39	Rural	0.8348	0.8310	99939	Rural	0.8329
39230	Clearfield County, Pennsylvania	39	Rural	0.8348	0.8310	99939	Rural	0.8329
39240	Clinton County, Pennsylvania	39	Rural	0.8348	0.8310	99939	Rural	0.8329
39250	Columbia County, Pennsylvania	7560	Urban	0.8522	0.8310	99939	Rural	0.8416
39260	Crawford County, Pennsylvania	39	Rural	0.8348	0.8310	99939	Rural	0.8329
39270	Cumberland County, Pennsylvania	3240	Urban	0.9286	0.9359	25420	Urban	0.9323
39280	Dauphin County, Pennsylvania	3240	Urban	0.9286	0.9359	25420	Urban	0.9323
39290	Delaware County, Pennsylvania	6160	Urban	1.0824	1.0865	37964	Urban	1.0845
39310	Elk County, Pennsylvania	39	Rural	0.8348	0.8310	99939	Rural	0.8329
39320	Erie County, Pennsylvania	2360	Urban	0.8699	0.8699	21500	Urban	0.8699
39330	Fayette County, Pennsylvania	6280	Urban	0.8756	0.8736	38300	Urban	0.8746
39340	Forest County, Pennsylvania	39	Rural	0.8348	0.8310	99939	Rural	0.8329
39350	Franklin County, Pennsylvania	39	Rural	0.8348	0.8310	99939	Rural	0.8329
39360	Fulton County, Pennsylvania	39	Rural	0.8348	0.8310	99939	Rural	0.8329
39370	Greene County, Pennsylvania	39	Rural	0.8348	0.8310	99939	Rural	0.8329
39380	Huntingdon County, Pennsylvania	39	Rural	0.8348	0.8310	99939	Rural	0.8329
39390	Indiana County, Pennsylvania	39	Rural	0.8348	0.8310	99939	Rural	0.8329
39400	Jefferson County, Pennsylvania	39	Rural	0.8348	0.8310	99939	Rural	0.8329
39410	Juniata County, Pennsylvania	39	Rural	0.8348	0.8310	99939	Rural	0.8329
39420	Lackawanna County, Pennsylvania	7560	Urban	0.8522	0.8543	42540	Urban	0.8533
39440	Lancaster County, Pennsylvania	4000	Urban	0.9883	0.9883	29540	Urban	0.9883
39450	Lawrence County, Pennsylvania	39	Rural	0.8348	0.8310	99939	Rural	0.8329
39460	Lebanon County, Pennsylvania	3240	Urban	0.9286	0.8570	30140	Urban	0.8928
39470	Lehigh County, Pennsylvania	0240	Urban	0.9536	0.9501	10900	Urban	0.9519
39480	Luzerne County, Pennsylvania	7560	Urban	0.8522	0.8543	42540	Urban	0.8533
39510	Lycoming County, Pennsylvania	9140	Urban	0.8485	0.8485	48700	Urban	0.8485
39520	Mc Kean County, Pennsylvania	39	Rural	0.8348	0.8310	99939	Rural	0.8329
39530	Mercer County, Pennsylvania	7610	Urban	0.7881	0.9237	49660	Urban	0.8559
39540	Mifflin County, Pennsylvania	39	Rural	0.8348	0.8310	99939	Rural	0.8329
39550	Monroe County, Pennsylvania	39	Rural	0.8348	0.8310	99939	Rural	0.8329
39560	Montgomery County, Pennsylvania	6160	Urban	1.0824	1.0865	37964	Urban	1.0845
39580	Montour County, Pennsylvania	39	Rural	0.8348	0.8310	99939	Rural	0.8329
39590	Northampton County, Pennsylvania	0240	Urban	0.9536	0.9501	10900	Urban	0.9519
39600	Northumberland County, Pennsylvania	39	Rural	0.8348	0.8310	99939	Rural	0.8329
39610	Perry County, Pennsylvania	3240	Urban	0.9286	0.9359	25420	Urban	0.9323
39620	Philadelphia County, Pennsylvania	6160	Urban	1.0824	1.0865	37964	Urban	1.0845
39630	Pike County, Pennsylvania	5660	Urban	1.1170	1.1687	35084	Urban	1.1429
39640	Potter County, Pennsylvania	39	Rural	0.8348	0.8310	99939	Rural	0.8329
39650	Schuylkill County, Pennsylvania	39	Rural	0.8348	0.8310	99939	Rural	0.8329
39670	Snyder County, Pennsylvania	39	Rural	0.8348	0.8310	99939	Rural	0.8329

TABLE 1.—FY 2006 IRF PPS TRANSITION WAGE INDEX TABLE—Continued

[For discharges occurring on or after October 1, 2005 and on or before September 30, 2006]

SSA state/ county code	County name	MSA No.	MSA urban/ rural	2006 MSA-based WI	2006 CBSA-based WI	CBSA No.	CBSA urban/ rural	Transition wage index *
39680	Somerset County, Pennsylvania	3680	Urban	0.7980	0.8310	99939	Rural	0.8145
39690	Sullivan County, Pennsylvania	39	Rural	0.8348	0.8310	99939	Rural	0.8329
39700	Susquehanna County, Pennsylvania	39	Rural	0.8348	0.8310	99939	Rural	0.8329
39710	Tioga County, Pennsylvania	39	Rural	0.8348	0.8310	99939	Rural	0.8329
39720	Union County, Pennsylvania	39	Rural	0.8348	0.8310	99939	Rural	0.8329
39730	Venango County, Pennsylvania	39	Rural	0.8348	0.8310	99939	Rural	0.8329
39740	Warren County, Pennsylvania	39	Rural	0.8348	0.8310	99939	Rural	0.8329
39750	Washington County, Pennsylvania	6280	Urban	0.8756	0.8736	38300	Urban	0.8746
39760	Wayne County, Pennsylvania	39	Rural	0.8348	0.8310	99939	Rural	0.8329
39770	Westmoreland County, Pennsylvania	6280	Urban	0.8756	0.8736	38300	Urban	0.8746
39790	Wyoming County, Pennsylvania	7560	Urban	0.8522	0.8543	42540	Urban	0.8533
39800	York County, Pennsylvania	9280	Urban	0.9150	0.9150	49620	Urban	0.9150
40010	Adjuntas County, Puerto Rico	40	Rural	0.4047	0.4047	99940	Rural	0.4047
40020	Aguada County, Puerto Rico	0060	Urban	0.4294	0.4280	10380	Urban	0.4287
40030	Aguadilla County, Puerto Rico	0060	Urban	0.4294	0.4280	10380	Urban	0.4287
40040	Aguas Buenas County, Puerto Rico	7440	Urban	0.4802	0.4645	41980	Urban	0.4724
40050	Aibonito County, Puerto Rico	40	Rural	0.4047	0.4645	41980	Urban	0.4346
40060	Anasco County, Puerto Rico	4840	Urban	0.4769	0.4280	10380	Urban	0.4525
40070	Arecibo County, Puerto Rico	0470	Urban	0.3757	0.4645	41980	Urban	0.4201
40080	Arroyo County, Puerto Rico	40	Rural	0.4047	0.4005	25020	Urban	0.4026
40090	Barceloneta County, Puerto Rico	7440	Urban	0.4802	0.4645	41980	Urban	0.4724
40100	Barranquitas County, Puerto Rico	40	Rural	0.4047	0.4645	41980	Urban	0.4346
40110	Bayamon County, Puerto Rico	7440	Urban	0.4802	0.4645	41980	Urban	0.4724
40120	Cabo Rojo County, Puerto Rico	4840	Urban	0.4769	0.5240	41900	Urban	0.5005
40130	Caguas County, Puerto Rico	1310	Urban	0.4061	0.4645	41980	Urban	0.4353
40140	Camuy County, Puerto Rico	0470	Urban	0.3757	0.4645	41980	Urban	0.4201
40145	Canovanas County, Puerto Rico	7440	Urban	0.4802	0.4645	41980	Urban	0.4724
40150	Carolina County, Puerto Rico	7440	Urban	0.4802	0.4645	41980	Urban	0.4724
40160	Catano County, Puerto Rico	7440	Urban	0.4802	0.4645	41980	Urban	0.4724
40170	Cayey County, Puerto Rico	1310	Urban	0.4061	0.4645	41980	Urban	0.4353
40180	Ceiba County, Puerto Rico	7440	Urban	0.4802	0.3939	21940	Urban	0.4371
40190	Ciales County, Puerto Rico	40	Rural	0.4047	0.4645	41980	Urban	0.4346
40200	Cidra County, Puerto Rico	1310	Urban	0.4061	0.4645	41980	Urban	0.4353
40210	Coamo County, Puerto Rico	40	Rural	0.4047	0.4047	99940	Rural	0.4047
40220	Comerio County, Puerto Rico	7440	Urban	0.4802	0.4645	41980	Urban	0.4724
40230	Corozal County, Puerto Rico	7440	Urban	0.4802	0.4645	41980	Urban	0.4724
40240	Culebra County, Puerto Rico	40	Rural	0.4047	0.4047	99940	Rural	0.4047
40250	Dorado County, Puerto Rico	7440	Urban	0.4802	0.4645	41980	Urban	0.4724
40260	Fajardo County, Puerto Rico	7440	Urban	0.4802	0.3939	21940	Urban	0.4371
40265	Florida County, Puerto Rico	7440	Urban	0.4802	0.4645	41980	Urban	0.4724
40270	Guanica County, Puerto Rico	40	Rural	0.4047	0.4493	49500	Urban	0.4270
40280	Guayama County, Puerto Rico	40	Rural	0.4047	0.4005	25020	Urban	0.4026
40290	Guayanilla County, Puerto Rico	6360	Urban	0.4954	0.4493	49500	Urban	0.4724
40300	Guaynabo County, Puerto Rico	7440	Urban	0.4802	0.4645	41980	Urban	0.4724
40310	Gurabo County, Puerto Rico	1310	Urban	0.4061	0.4645	41980	Urban	0.4353
40320	Hatillo County, Puerto Rico	0470	Urban	0.3757	0.4645	41980	Urban	0.4201
40330	Hormigueros County, Puerto Rico	4840	Urban	0.4769	0.4493	32420	Urban	0.4631
40340	Humacao County, Puerto Rico	7440	Urban	0.4802	0.4645	41980	Urban	0.4724
40350	Isabela County, Puerto Rico	40	Rural	0.4047	0.4280	10380	Urban	0.4164
40360	Jayuya County, Puerto Rico	40	Rural	0.4047	0.4047	99940	Rural	0.4047
40370	Juana Diaz County, Puerto Rico	6360	Urban	0.4954	0.5006	38660	Urban	0.4980
40380	Juncos County, Puerto Rico	7440	Urban	0.4802	0.4645	41980	Urban	0.4724
40390	Lajas County, Puerto Rico	40	Rural	0.4047	0.5240	41900	Urban	0.4644
40400	Lares County, Puerto Rico	40	Rural	0.4047	0.4280	10380	Urban	0.4164
40410	Las Marias County, Puerto Rico	40	Rural	0.4047	0.4047	99940	Rural	0.4047
40420	Las Piedras County, Puerto Rico	7440	Urban	0.4802	0.4645	41980	Urban	0.4724
40430	Loiza County, Puerto Rico	7440	Urban	0.4802	0.4645	41980	Urban	0.4724
40440	Luquillo County, Puerto Rico	7440	Urban	0.4802	0.3939	21940	Urban	0.4371
40450	Manati County, Puerto Rico	7440	Urban	0.4802	0.4645	41980	Urban	0.4724
40460	Maricao County, Puerto Rico	40	Rural	0.4047	0.4047	99940	Rural	0.4047
40470	Maunabo County, Puerto Rico	40	Rural	0.4047	0.4645	41980	Urban	0.4346
40480	Mayaguez County, Puerto Rico	4840	Urban	0.4769	0.4493	32420	Urban	0.4631
40490	Moca County, Puerto Rico	0060	Urban	0.4294	0.4280	10380	Urban	0.4287
40500	Morovis County, Puerto Rico	7440	Urban	0.4802	0.4645	41980	Urban	0.4724
40510	Naguabo County, Puerto Rico	7440	Urban	0.4802	0.4645	41980	Urban	0.4724
40520	Naranjito County, Puerto Rico	7440	Urban	0.4802	0.4645	41980	Urban	0.4724
40530	Orocovis County, Puerto Rico	40	Rural	0.4047	0.4645	41980	Urban	0.4346
40540	Patillas County, Puerto Rico	40	Rural	0.4047	0.4005	25020	Urban	0.4026

TABLE 1.—FY 2006 IRF PPS TRANSITION WAGE INDEX TABLE—Continued

[For discharges occurring on or after October 1, 2005 and on or before September 30, 2006]

SSA state/ county code	County name	MSA No.	MSA urban/ rural	2006 MSA-based WI	2006 CBSA-based WI	CBSA No.	CBSA urban/ rural	Transition wage index *
40550	Penuelas County, Puerto Rico	6360	Urban	0.4954	0.4493	49500	Urban	0.4724
40560	Ponce County, Puerto Rico	6360	Urban	0.4954	0.5006	38660	Urban	0.4980
40570	Quebradillas County, Puerto Rico	40	Rural	0.4047	0.4645	41980	Urban	0.4346
40580	Rincon County, Puerto Rico	40	Rural	0.4047	0.4280	10380	Urban	0.4164
40590	Rio Grande County, Puerto Rico	7440	Urban	0.4802	0.4645	41980	Urban	0.4724
40610	Sabana Grande County, Puerto Rico	4840	Urban	0.4769	0.5240	41900	Urban	0.5005
40620	Salinas County, Puerto Rico	40	Rural	0.4047	0.4047	99940	Rural	0.4047
40630	San German County, Puerto Rico	4840	Urban	0.4769	0.5240	41900	Urban	0.5005
40640	San Juan County, Puerto Rico	7440	Urban	0.4802	0.4645	41980	Urban	0.4724
40650	San Lorenzo County, Puerto Rico	310	Urban	0.4061	0.4645	41980	Urban	0.4353
40660	San Sebastian County, Puerto Rico	40	Rural	0.4047	0.4280	10380	Urban	0.4164
40670	Santa Isabel County, Puerto Rico	40	Rural	0.4047	0.4047	99940	Rural	0.4047
40680	Toa Alta County, Puerto Rico	7440	Urban	0.4802	0.4645	41980	Urban	0.4724
40690	Toa Baja County, Puerto Rico	7440	Urban	0.4802	0.4645	41980	Urban	0.4724
40700	Trujillo Alto County, Puerto Rico	7440	Urban	0.4802	0.4645	41980	Urban	0.4724
40710	Utuado County, Puerto Rico	40	Rural	0.4047	0.4047	99940	Rural	0.4047
40720	Vega Alta County, Puerto Rico	7440	Urban	0.4802	0.4645	41980	Urban	0.4724
40730	Vega Baja County, Puerto Rico	7440	Urban	0.4802	0.4645	41980	Urban	0.4724
40740	Vieques County, Puerto Rico	40	Rural	0.4047	0.4047	99940	Rural	0.4047
40750	Villalba County, Puerto Rico	6360	Urban	0.4954	0.5006	38660	Urban	0.4980
40760	Yabucoa County, Puerto Rico	7440	Urban	0.4802	0.4645	41980	Urban	0.4724
40770	Yauco County, Puerto Rico	6360	Urban	0.4954	0.4493	49500	Urban	0.4724
41000	Bristol County, Rhode Island	6483	Urban	1.1061	1.0929	39300	Urban	1.0995
41010	Kent County, Rhode Island	6483	Urban	1.1061	1.0929	39300	Urban	1.0995
41020	Newport County, Rhode Island	6483	Urban	1.1061	1.0929	39300	Urban	1.0995
41030	Providence County, Rhode Island	6483	Urban	1.1061	1.0929	39300	Urban	1.0995
41050	Washington County, Rhode Island	6483	Urban	1.1061	1.0929	39300	Urban	1.0995
42000	Abbeville County, S Carolina	42	Rural	0.8640	0.8683	99942	Rural	0.8662
42010	Aiken County, S Carolina	0600	Urban	0.9208	0.9154	12260	Urban	0.9181
42020	Allendale County, S Carolina	42	Rural	0.8640	0.8683	99942	Rural	0.8662
42030	Anderson County, S Carolina	3160	Urban	0.9400	0.8670	11340	Urban	0.9035
42040	Bamberg County, S Carolina	42	Rural	0.8640	0.8683	99942	Rural	0.8662
42050	Barnwell County, S Carolina	42	Rural	0.8640	0.8683	99942	Rural	0.8662
42060	Beaufort County, S Carolina	42	Rural	0.8640	0.8683	99942	Rural	0.8662
42070	Berkeley County, S Carolina	1440	Urban	0.9420	0.9420	16700	Urban	0.9420
42080	Calhoun County, S Carolina	42	Rural	0.8640	0.9392	17900	Urban	0.9016
42090	Charleston County, S Carolina	1440	Urban	0.9420	0.9420	16700	Urban	0.9420
42100	Cherokee County, S Carolina	3160	Urban	0.9400	0.8683	99942	Rural	0.9042
42110	Chester County, S Carolina	42	Rural	0.8640	0.8683	99942	Rural	0.8662
42120	Chesterfield County, S Carolina	42	Rural	0.8640	0.8683	99942	Rural	0.8662
42130	Clarendon County, S Carolina	42	Rural	0.8640	0.8683	99942	Rural	0.8662
42140	Colleton County, S Carolina	42	Rural	0.8640	0.8683	99942	Rural	0.8662
42150	Darlington County, S Carolina	42	Rural	0.8640	0.8833	22500	Urban	0.8737
42160	Dillon County, S Carolina	42	Rural	0.8640	0.8683	99942	Rural	0.8662
42170	Dorchester County, S Carolina	1440	Urban	0.9420	0.9420	16700	Urban	0.9420
42180	Edgefield County, S Carolina	0600	Urban	0.9208	0.9154	12260	Urban	0.9181
42190	Fairfield County, S Carolina	42	Rural	0.8640	0.9392	17900	Urban	0.9016
42200	Florence County, S Carolina	2655	Urban	0.8960	0.8833	22500	Urban	0.8897
42210	Georgetown County, S Carolina	42	Rural	0.8640	0.8683	99942	Rural	0.8662
42220	Greenville County, S Carolina	3160	Urban	0.9400	0.9557	24860	Urban	0.9479
42230	Greenwood County, S Carolina	42	Rural	0.8640	0.8683	99942	Rural	0.8662
42240	Hampton County, S Carolina	42	Rural	0.8640	0.8683	99942	Rural	0.8662
42250	Horry County, S Carolina	5330	Urban	0.9022	0.9022	34820	Urban	0.9022
42260	Jasper County, S Carolina	42	Rural	0.8640	0.8683	99942	Rural	0.8662
42270	Kershaw County, S Carolina	42	Rural	0.8640	0.9392	17900	Urban	0.9016
42280	Lancaster County, S Carolina	42	Rural	0.8640	0.8683	99942	Rural	0.8662
42290	Laurens County, S Carolina	42	Rural	0.8640	0.9557	24860	Urban	0.9099
42300	Lee County, S Carolina	42	Rural	0.8640	0.8683	99942	Rural	0.8662
42310	Lexington County, S Carolina	1760	Urban	0.9450	0.9392	17900	Urban	0.9421
42320	Mc Cormick County, S Carolina	42	Rural	0.8640	0.8683	99942	Rural	0.8662
42330	Marion County, S Carolina	42	Rural	0.8640	0.8683	99942	Rural	0.8662
42340	Marlboro County, S Carolina	42	Rural	0.8640	0.8683	99942	Rural	0.8662
42350	Newberry County, S Carolina	42	Rural	0.8640	0.8683	99942	Rural	0.8662
42360	Oconee County, S Carolina	42	Rural	0.8640	0.8683	99942	Rural	0.8662
42370	Orangeburg County, S Carolina	42	Rural	0.8640	0.8683	99942	Rural	0.8662
42380	Pickens County, S Carolina	3160	Urban	0.9400	0.9557	24860	Urban	0.9479
42390	Richland County, S Carolina	1760	Urban	0.9450	0.9392	17900	Urban	0.9421
42400	Saluda County, S Carolina	42	Rural	0.8640	0.9392	17900	Urban	0.9016

TABLE 1.—FY 2006 IRF PPS TRANSITION WAGE INDEX TABLE—Continued

[For discharges occurring on or after October 1, 2005 and on or before September 30, 2006]

SSA state/ county code	County name	MSA No.	MSA urban/ rural	2006 MSA-based WI	2006 CBSA-based WI	CBSA No.	CBSA urban/ rural	Transition wage index *
42410	Spartanburg County, S Carolina	3160	Urban	0.9400	0.9519	43900	Urban	0.9460
42420	Sumter County, S Carolina	8140	Urban	0.8520	0.8520	44940	Urban	0.8520
42430	Union County, S Carolina	42	Rural	0.8640	0.8683	99942	Rural	0.8662
42440	Williamsburg County, S Carolina	42	Rural	0.8640	0.8683	99942	Rural	0.8662
42450	York County, S Carolina	1520	Urban	0.9711	0.9743	16740	Urban	0.9727
43010	Aurora County, S Dakota	43	Rural	0.8393	0.8398	99943	Rural	0.8396
43020	Beadle County, S Dakota	43	Rural	0.8393	0.8398	99943	Rural	0.8396
43030	Bennett County, S Dakota	43	Rural	0.8393	0.8398	99943	Rural	0.8396
43040	Bon Homme County, S Dakota	43	Rural	0.8393	0.8398	99943	Rural	0.8396
43050	Brookings County, S Dakota	43	Rural	0.8393	0.8398	99943	Rural	0.8396
43060	Brown County, S Dakota	43	Rural	0.8393	0.8398	99943	Rural	0.8396
43070	Brule County, S Dakota	43	Rural	0.8393	0.8398	99943	Rural	0.8396
43080	Buffalo County, S Dakota	43	Rural	0.8393	0.8398	99943	Rural	0.8396
43090	Butte County, S Dakota	43	Rural	0.8393	0.8398	99943	Rural	0.8396
43100	Campbell County, S Dakota	43	Rural	0.8393	0.8398	99943	Rural	0.8396
43110	Charles Mix County, S Dakota	43	Rural	0.8393	0.8398	99943	Rural	0.8396
43120	Clark County, S Dakota	43	Rural	0.8393	0.8398	99943	Rural	0.8396
43130	Clay County, S Dakota	43	Rural	0.8393	0.8398	99943	Rural	0.8396
43140	Codington County, S Dakota	43	Rural	0.8393	0.8398	99943	Rural	0.8396
43150	Corson County, S Dakota	43	Rural	0.8393	0.8398	99943	Rural	0.8396
43160	Custer County, S Dakota	43	Rural	0.8393	0.8398	99943	Rural	0.8396
43170	Davison County, S Dakota	43	Rural	0.8393	0.8398	99943	Rural	0.8396
43180	Day County, S Dakota	43	Rural	0.8393	0.8398	99943	Rural	0.8396
43190	Deuel County, S Dakota	43	Rural	0.8393	0.8398	99943	Rural	0.8396
43200	Dewey County, S Dakota	43	Rural	0.8393	0.8398	99943	Rural	0.8396
43210	Douglas County, S Dakota	43	Rural	0.8393	0.8398	99943	Rural	0.8396
43220	Edmunds County, S Dakota	43	Rural	0.8393	0.8398	99943	Rural	0.8396
43230	Fall River County, S Dakota	43	Rural	0.8393	0.8398	99943	Rural	0.8396
43240	Faulk County, S Dakota	43	Rural	0.8393	0.8398	99943	Rural	0.8396
43250	Grant County, S Dakota	43	Rural	0.8393	0.8398	99943	Rural	0.8396
43260	Gregory County, S Dakota	43	Rural	0.8393	0.8398	99943	Rural	0.8396
43270	Haakon County, S Dakota	43	Rural	0.8393	0.8398	99943	Rural	0.8396
43280	Hamlin County, S Dakota	43	Rural	0.8393	0.8398	99943	Rural	0.8396
43290	Hand County, S Dakota	43	Rural	0.8393	0.8398	99943	Rural	0.8396
43300	Hanson County, S Dakota	43	Rural	0.8393	0.8398	99943	Rural	0.8396
43310	Harding County, S Dakota	43	Rural	0.8393	0.8398	99943	Rural	0.8396
43320	Hughes County, S Dakota	43	Rural	0.8393	0.8398	99943	Rural	0.8396
43330	Hutchinson County, S Dakota	43	Rural	0.8393	0.8398	99943	Rural	0.8396
43340	Hyde County, S Dakota	43	Rural	0.8393	0.8398	99943	Rural	0.8396
43350	Jackson County, S Dakota	43	Rural	0.8393	0.8398	99943	Rural	0.8396
43360	Jerauld County, S Dakota	43	Rural	0.8393	0.8398	99943	Rural	0.8396
43370	Jones County, S Dakota	43	Rural	0.8393	0.8398	99943	Rural	0.8396
43380	Kingsbury County, S Dakota	43	Rural	0.8393	0.8398	99943	Rural	0.8396
43390	Lake County, S Dakota	43	Rural	0.8393	0.8398	99943	Rural	0.8396
43400	Lawrence County, S Dakota	43	Rural	0.8393	0.8398	99943	Rural	0.8396
43410	Lincoln County, S Dakota	7760	Urban	0.9441	0.9441	43620	Urban	0.9441
43420	Lyman County, S Dakota	43	Rural	0.8393	0.8398	99943	Rural	0.8396
43430	Mc Cook County, S Dakota	43	Rural	0.8393	0.9441	43620	Urban	0.8917
43440	Mc Pherson County, S Dakota	43	Rural	0.8393	0.8398	99943	Rural	0.8396
43450	Marshall County, S Dakota	43	Rural	0.8393	0.8398	99943	Rural	0.8396
43460	Meade County, S Dakota	43	Rural	0.8393	0.8912	39660	Urban	0.8653
43470	Mellette County, S Dakota	43	Rural	0.8393	0.8398	99943	Rural	0.8396
43480	Miner County, S Dakota	43	Rural	0.8393	0.8398	99943	Rural	0.8396
43490	Minnehaha County, S Dakota	7760	Urban	0.9441	0.9441	43620	Urban	0.9441
43500	Moody County, S Dakota	43	Rural	0.8393	0.8398	99943	Rural	0.8396
43510	Pennington County, S Dakota	6660	Urban	0.8912	0.8912	39660	Urban	0.8912
43520	Perkins County, S Dakota	43	Rural	0.8393	0.8398	99943	Rural	0.8396
43530	Potter County, S Dakota	43	Rural	0.8393	0.8398	99943	Rural	0.8396
43540	Roberts County, S Dakota	43	Rural	0.8393	0.8398	99943	Rural	0.8396
43550	Sanborn County, S Dakota	43	Rural	0.8393	0.8398	99943	Rural	0.8396
43560	Shannon County, S Dakota	43	Rural	0.8393	0.8398	99943	Rural	0.8396
43570	Spink County, S Dakota	43	Rural	0.8393	0.8398	99943	Rural	0.8396
43580	Stanley County, S Dakota	43	Rural	0.8393	0.8398	99943	Rural	0.8396
43590	Sully County, S Dakota	43	Rural	0.8393	0.8398	99943	Rural	0.8396
43600	Todd County, S Dakota	43	Rural	0.8393	0.8398	99943	Rural	0.8396
43610	Tripp County, S Dakota	43	Rural	0.8393	0.8398	99943	Rural	0.8396
43620	Turner County, S Dakota	43	Rural	0.8393	0.9441	43620	Urban	0.8917
43630	Union County, S Dakota	43	Rural	0.8393	0.9070	43580	Urban	0.8732

TABLE 1.—FY 2006 IRF PPS TRANSITION WAGE INDEX TABLE—Continued

[For discharges occurring on or after October 1, 2005 and on or before September 30, 2006]

SSA state/ county code	County name	MSA No.	MSA urban/ rural	2006 MSA-based WI	2006 CBSA-based WI	CBSA No.	CBSA urban/ rural	Transition wage index *
43640	Walworth County, S Dakota	43	Rural	0.8393	0.8398	99943	Rural	0.8396
43650	Washabaugh County, S Dakota	43	Rural	0.8393	0.8398	99943	Rural	0.8396
43670	Yankton County, S Dakota	43	Rural	0.8393	0.8398	99943	Rural	0.8396
43680	Ziebach County, S Dakota	43	Rural	0.8393	0.8398	99943	Rural	0.8396
44000	Anderson County, Tennessee	3840	Urban	0.8508	0.8548	28940	Urban	0.8528
44010	Bedford County, Tennessee	44	Rural	0.7876	0.7869	99944	Rural	0.7873
44020	Benton County, Tennessee	44	Rural	0.7876	0.7869	99944	Rural	0.7873
44030	Bledsoe County, Tennessee	44	Rural	0.7876	0.7869	99944	Rural	0.7873
44040	Blount County, Tennessee	3840	Urban	0.8508	0.8548	28940	Urban	0.8528
44050	Bradley County, Tennessee	44	Rural	0.7876	0.7844	17420	Urban	0.7860
44060	Campbell County, Tennessee	44	Rural	0.7876	0.7869	99944	Rural	0.7873
44070	Cannon County, Tennessee	44	Rural	0.7876	1.0086	34980	Urban	0.8981
44080	Carroll County, Tennessee	44	Rural	0.7876	0.7869	99944	Rural	0.7873
44090	Carter County, Tennessee	3660	Urban	0.8202	0.8146	27740	Urban	0.8174
44100	Cheatham County, Tennessee	5360	Urban	1.0108	1.0086	34980	Urban	1.0097
44110	Chester County, Tennessee	3580	Urban	0.8900	0.8900	27180	Urban	0.8900
44120	Claiborne County, Tennessee	44	Rural	0.7876	0.7869	99944	Rural	0.7873
44130	Clay County, Tennessee	44	Rural	0.7876	0.7869	99944	Rural	0.7873
44140	Cocke County, Tennessee	44	Rural	0.7876	0.7869	99944	Rural	0.7873
44150	Coffee County, Tennessee	44	Rural	0.7876	0.7869	99944	Rural	0.7873
44160	Crockett County, Tennessee	44	Rural	0.7876	0.7869	99944	Rural	0.7873
44170	Cumberland County, Tennessee	44	Rural	0.7876	0.7869	99944	Rural	0.7873
44180	Davidson County, Tennessee	5360	Urban	1.0108	1.0086	34980	Urban	1.0097
44190	Decatur County, Tennessee	44	Rural	0.7876	0.7869	99944	Rural	0.7873
44200	De Kalb County, Tennessee	44	Rural	0.7876	0.7869	99944	Rural	0.7873
44210	Dickson County, Tennessee	5360	Urban	1.0108	1.0086	34980	Urban	1.0097
44220	Dyer County, Tennessee	44	Rural	0.7876	0.7869	99944	Rural	0.7873
44230	Fayette County, Tennessee	4920	Urban	0.9234	0.9217	32820	Urban	0.9226
44240	Fentress County, Tennessee	44	Rural	0.7876	0.7869	99944	Rural	0.7873
44250	Franklin County, Tennessee	44	Rural	0.7876	0.7869	99944	Rural	0.7873
44260	Gibson County, Tennessee	44	Rural	0.7876	0.7869	99944	Rural	0.7873
44270	Giles County, Tennessee	44	Rural	0.7876	0.7869	99944	Rural	0.7873
44280	Grainger County, Tennessee	44	Rural	0.7876	0.7790	34100	Urban	0.7833
44290	Greene County, Tennessee	44	Rural	0.7876	0.7869	99944	Rural	0.7873
44300	Grundy County, Tennessee	44	Rural	0.7876	0.7869	99944	Rural	0.7873
44310	Hamblen County, Tennessee	44	Rural	0.7876	0.7790	34100	Urban	0.7833
44320	Hamilton County, Tennessee	1560	Urban	0.9207	0.9207	16860	Urban	0.9207
44330	Hancock County, Tennessee	44	Rural	0.7876	0.7869	99944	Rural	0.7873
44340	Hardeman County, Tennessee	44	Rural	0.7876	0.7869	99944	Rural	0.7873
44350	Hardin County, Tennessee	44	Rural	0.7876	0.7869	99944	Rural	0.7873
44360	Hawkins County, Tennessee	3660	Urban	0.8202	0.8240	28700	Urban	0.8221
44370	Haywood County, Tennessee	44	Rural	0.7876	0.7869	99944	Rural	0.7873
44380	Henderson County, Tennessee	44	Rural	0.7876	0.7869	99944	Rural	0.7873
44390	Henry County, Tennessee	44	Rural	0.7876	0.7869	99944	Rural	0.7873
44400	Hickman County, Tennessee	44	Rural	0.7876	1.0086	34980	Urban	0.8981
44410	Houston County, Tennessee	44	Rural	0.7876	0.7869	99944	Rural	0.7873
44420	Humphreys County, Tennessee	44	Rural	0.7876	0.7869	99944	Rural	0.7873
44430	Jackson County, Tennessee	44	Rural	0.7876	0.7869	99944	Rural	0.7873
44440	Jefferson County, Tennessee	44	Rural	0.7876	0.7790	34100	Urban	0.7833
44450	Johnson County, Tennessee	44	Rural	0.7876	0.7869	99944	Rural	0.7873
44460	Knox County, Tennessee	3840	Urban	0.8508	0.8548	28940	Urban	0.8528
44470	Lake County, Tennessee	44	Rural	0.7876	0.7869	99944	Rural	0.7873
44480	Lauderdale County, Tennessee	44	Rural	0.7876	0.7869	99944	Rural	0.7873
44490	Lawrence County, Tennessee	44	Rural	0.7876	0.7869	99944	Rural	0.7873
44500	Lewis County, Tennessee	44	Rural	0.7876	0.7869	99944	Rural	0.7873
44510	Lincoln County, Tennessee	44	Rural	0.7876	0.7869	99944	Rural	0.7873
44520	Loudon County, Tennessee	3840	Urban	0.8508	0.8548	28940	Urban	0.8528
44530	Mc Minn County, Tennessee	44	Rural	0.7876	0.7869	99944	Rural	0.7873
44540	Mc Nairy County, Tennessee	44	Rural	0.7876	0.7869	99944	Rural	0.7873
44550	Macon County, Tennessee	44	Rural	0.7876	1.0086	34980	Urban	0.8981
44560	Madison County, Tennessee	3580	Urban	0.8900	0.8900	27180	Urban	0.8900
44570	Marion County, Tennessee	1560	Urban	0.9207	0.9207	16860	Urban	0.9207
44580	Marshall County, Tennessee	44	Rural	0.7876	0.7869	99944	Rural	0.7873
44590	Maury County, Tennessee	44	Rural	0.7876	0.7869	99944	Rural	0.7873
44600	Meigs County, Tennessee	44	Rural	0.7876	0.7869	99944	Rural	0.7873
44610	Monroe County, Tennessee	44	Rural	0.7876	0.7869	99944	Rural	0.7873
44620	Montgomery County, Tennessee	1660	Urban	0.8022	0.8022	17300	Urban	0.8022
44630	Moore County, Tennessee	44	Rural	0.7876	0.7869	99944	Rural	0.7873

TABLE 1.—FY 2006 IRF PPS TRANSITION WAGE INDEX TABLE—Continued

[For discharges occurring on or after October 1, 2005 and on or before September 30, 2006]

SSA state/ county code	County name	MSA No.	MSA urban/ rural	2006 MSA-based WI	2006 CBSA-based WI	CBSA No.	CBSA urban/ rural	Transition wage index *
44640	Morgan County, Tennessee	44	Rural	0.7876	0.7869	99944	Rural	0.7873
44650	Obion County, Tennessee	44	Rural	0.7876	0.7869	99944	Rural	0.7873
44660	Overton County, Tennessee	44	Rural	0.7876	0.7869	99944	Rural	0.7873
44670	Perry County, Tennessee	44	Rural	0.7876	0.7869	99944	Rural	0.7873
44680	Pickett County, Tennessee	44	Rural	0.7876	0.7869	99944	Rural	0.7873
44690	Polk County, Tennessee	44	Rural	0.7876	0.7844	17420	Urban	0.7860
44700	Putnam County, Tennessee	44	Rural	0.7876	0.7869	99944	Rural	0.7873
44710	Rhea County, Tennessee	44	Rural	0.7876	0.7869	99944	Rural	0.7873
44720	Roane County, Tennessee	44	Rural	0.7876	0.7869	99944	Rural	0.7873
44730	Robertson County, Tennessee	5360	Urban	1.0108	1.0086	34980	Urban	1.0097
44740	Rutherford County, Tennessee	5360	Urban	1.0108	1.0086	4980	Urban	1.0097
44750	Scott County, Tennessee	44	Rural	0.7876	0.7869	99944	Rural	0.7873
44760	Sequatchie County, Tennessee	44	Rural	0.7876	0.9207	16860	Urban	0.8542
44770	Sevier County, Tennessee	3840	Urban	0.8508	0.7869	99944	Rural	0.8189
44780	Shelby County, Tennessee	4920	Urban	0.9234	0.9217	32820	Urban	0.9226
44790	Smith County, Tennessee	44	Rural	0.7876	1.0086	34980	Urban	0.8981
44800	Stewart County, Tennessee	44	Rural	0.7876	0.8022	17300	Urban	0.7949
44810	Sullivan County, Tennessee	3660	Urban	0.8202	0.8240	28700	Urban	0.8221
44820	Sumner County, Tennessee	5360	Urban	1.0108	1.0086	34980	Urban	1.0097
44830	Tipton County, Tennessee	4920	Urban	0.9234	0.9217	32820	Urban	0.9226
44840	Trousdale County, Tennessee	44	Rural	0.7876	1.0086	34980	Urban	0.8981
44850	Unicoi County, Tennessee	3660	Urban	0.8202	0.8146	27740	Urban	0.8174
44860	Union County, Tennessee	3840	Urban	0.8508	0.8548	28940	Urban	0.8528
44870	Van Buren County, Tennessee	44	Rural	0.7876	0.7869	99944	Rural	0.7873
44880	Warren County, Tennessee	44	Rural	0.7876	0.7869	99944	Rural	0.7873
44890	Washington County, Tennessee	3660	Urban	0.8202	0.8146	27740	Urban	0.8174
44900	Wayne County, Tennessee	44	Rural	0.7876	0.7869	99944	Rural	0.7873
44910	Weakley County, Tennessee	44	Rural	0.7876	0.7869	99944	Rural	0.7873
44920	White County, Tennessee	44	Rural	0.7876	0.7869	99944	Rural	0.7873
44930	Williamson County, Tennessee	5360	Urban	1.0108	1.0086	34980	Urban	1.0097
44940	Wilson County, Tennessee	5360	Urban	1.0108	1.0086	34980	Urban	1.0097
45000	Anderson County, Texas	45	Rural	0.7910	0.7966	99945	Rural	0.7938
45010	Andrews County, Texas	45	Rural	0.7910	0.7966	99945	Rural	0.7938
45020	Angelina County, Texas	45	Rural	0.7910	0.7966	99945	Rural	0.7938
45030	Aransas County, Texas	45	Rural	0.7910	0.8647	18580	Urban	0.8279
45040	Archer County, Texas	9080	Urban	0.8395	0.8332	48660	Urban	0.8364
45050	Armstrong County, Texas	45	Rural	0.7910	0.9178	11100	Urban	0.8544
45060	Atascosa County, Texas	45	Rural	0.7910	0.9003	41700	Urban	0.8457
45070	Austin County, Texas	45	Rural	0.7910	0.9973	26420	Urban	0.8942
45080	Bailey County, Texas	45	Rural	0.7910	0.7966	99945	Rural	0.7938
45090	Bandera County, Texas	45	Rural	0.7910	0.9003	41700	Urban	0.8457
45100	Bastrop County, Texas	0640	Urban	0.9595	0.9595	12420	Urban	0.9595
45110	Baylor County, Texas	45	Rural	0.7910	0.7966	99945	Rural	0.7938
45113	Bee County, Texas	45	Rural	0.7910	0.7966	99945	Rural	0.7938
45120	Bell County, Texas	3810	Urban	0.9242	0.9242	28660	Urban	0.9242
45130	Bexar County, Texas	7240	Urban	0.9023	0.9003	41700	Urban	0.9013
45140	Blanco County, Texas	45	Rural	0.7910	0.7966	99945	Rural	0.7938
45150	Borden County, Texas	45	Rural	0.7910	0.7966	99945	Rural	0.7938
45160	Bosque County, Texas	45	Rural	0.7910	0.7966	99945	Rural	0.7938
45170	Bowie County, Texas	8360	Urban	0.8413	0.8413	45500	Urban	0.8413
45180	Brazoria County, Texas	1145	Urban	0.8524	0.9973	26420	Urban	0.9249
45190	Brazos County, Texas	1260	Urban	0.9243	0.9243	17780	Urban	0.9243
45200	Brewster County, Texas	45	Rural	0.7910	0.7966	99945	Rural	0.7938
45201	Briscoe County, Texas	45	Rural	0.7910	0.7966	99945	Rural	0.7938
45210	Brooks County, Texas	45	Rural	0.7910	0.7966	99945	Rural	0.7938
45220	Brown County, Texas	45	Rural	0.7910	0.7966	99945	Rural	0.7938
45221	Burleson County, Texas	45	Rural	0.7910	0.9243	7780	Urban	0.8577
45222	Burnet County, Texas	45	Rural	0.7910	0.7966	99945	Rural	0.7938
45223	Caldwell County, Texas	0640	Urban	0.9595	0.9595	12420	Urban	0.9595
45224	Calhoun County, Texas	45	Rural	0.7910	0.8470	47020	Urban	0.8190
45230	Callahan County, Texas	45	Rural	0.7910	0.7850	10180	Urban	0.7880
45240	Cameron County, Texas	1240	Urban	1.0125	1.0125	15180	Urban	1.0125
45250	Camp County, Texas	45	Rural	0.7910	0.7966	99945	Rural	0.7938
45251	Carson County, Texas	45	Rural	0.7910	0.9178	11100	Urban	0.8544
45260	Cass County, Texas	45	Rural	0.7910	0.7966	99945	Rural	0.7938
45270	Castro County, Texas	45	Rural	0.7910	0.7966	99945	Rural	0.7938
45280	Chambers County, Texas	3360	Urban	1.0117	0.9973	26420	Urban	1.0045
45281	Cherokee County, Texas	45	Rural	0.7910	0.7966	99945	Rural	0.7938

TABLE 1.—FY 2006 IRF PPS TRANSITION WAGE INDEX TABLE—Continued

[For discharges occurring on or after October 1, 2005 and on or before September 30, 2006]

SSA state/ county code	County name	MSA No.	MSA urban/ rural	2006 MSA-based WI	2006 CBSA-based WI	CBSA No.	CBSA urban/ rural	Transition wage index *
45290	Childress County, Texas	45	Rural	0.7910	0.7966	99945	Rural	0.7938
45291	Clay County, Texas	45	Rural	0.7910	0.8332	48660	Urban	0.8121
45292	Cochran County, Texas	45	Rural	0.7910	0.7966	99945	Rural	0.7938
45300	Coke County, Texas	45	Rural	0.7910	0.7966	99945	Rural	0.7938
45301	Coleman County, Texas	45	Rural	0.7910	0.7966	99945	Rural	0.7938
45310	Collin County, Texas	1920	Urban	1.0054	1.0074	19124	Urban	1.0064
45311	Collingsworth County, Texas	45	Rural	0.7910	0.7966	99945	Rural	0.7938
45312	Colorado County, Texas	45	Rural	0.7910	0.7966	99945	Rural	0.7938
45320	Comal County, Texas	7240	Urban	0.9023	0.9003	41700	Urban	0.9013
45321	Comanche County, Texas	45	Rural	0.7910	0.7966	99945	Rural	0.7938
45330	Concho County, Texas	45	Rural	0.7910	0.7966	99945	Rural	0.7938
45340	Cooke County, Texas	45	Rural	0.7910	0.7966	99945	Rural	0.7938
45341	Coryell County, Texas	3810	Urban	0.9242	0.9242	28660	Urban	0.9242
45350	Cottle County, Texas	45	Rural	0.7910	0.7966	99945	Rural	0.7938
45360	Crane County, Texas	45	Rural	0.7910	0.7966	99945	Rural	0.7938
45361	Crockett County, Texas	45	Rural	0.7910	0.7966	99945	Rural	0.7938
45362	Crosby County, Texas	45	Rural	0.7910	0.8777	31180	Urban	0.8344
45370	Culberson County, Texas	45	Rural	0.7910	0.7966	99945	Rural	0.7938
45380	Dallam County, Texas	45	Rural	0.7910	0.7966	99945	Rural	0.7938
45390	Dallas County, Texas	1920	Urban	1.0054	1.0074	19124	Urban	1.0064
45391	Dawson County, Texas	45	Rural	0.7910	0.7966	99945	Rural	0.7938
45392	Deaf Smith County, Texas	45	Rural	0.7910	0.7966	99945	Rural	0.7938
45400	Delta County, Texas	45	Rural	0.7910	1.0074	19124	Urban	0.8992
45410	Denton County, Texas	1920	Urban	1.0054	1.0074	19124	Urban	1.0064
45420	De Witt County, Texas	45	Rural	0.7910	0.7966	99945	Rural	0.7938
45421	Dickens County, Texas	45	Rural	0.7910	0.7966	99945	Rural	0.7938
45430	Dimmit County, Texas	45	Rural	0.7910	0.7966	99945	Rural	0.7938
45431	Donley County, Texas	45	Rural	0.7910	0.7966	99945	Rural	0.7938
45440	Duval County, Texas	45	Rural	0.7910	0.7966	99945	Rural	0.7938
45450	Eastland County, Texas	45	Rural	0.7910	0.7966	99945	Rural	0.7938
45451	Ector County, Texas	5800	Urban	0.9632	0.9798	36220	Urban	0.9715
45460	Edwards County, Texas	45	Rural	0.7910	0.7966	99945	Rural	0.7938
45470	Ellis County, Texas	1920	Urban	1.0054	1.0074	19124	Urban	1.0064
45480	El Paso County, Texas	2320	Urban	0.9181	0.9181	21340	Urban	0.9181
45490	Erath County, Texas	45	Rural	0.7910	0.7966	99945	Rural	0.7938
45500	Falls County, Texas	45	Rural	0.7910	0.7966	99945	Rural	0.7938
45510	Fannin County, Texas	45	Rural	0.7910	0.7966	99945	Rural	0.7938
45511	Fayette County, Texas	45	Rural	0.7910	0.7966	99945	Rural	0.7938
45520	Fisher County, Texas	45	Rural	0.7910	0.7966	99945	Rural	0.7938
45521	Floyd County, Texas	45	Rural	0.7910	0.7966	99945	Rural	0.7938
45522	Foard County, Texas	45	Rural	0.7910	0.7966	99945	Rural	0.7938
45530	Fort Bend County, Texas	3360	Urban	1.0117	0.9973	26420	Urban	1.0045
45531	Franklin County, Texas	45	Rural	0.7910	0.7966	99945	Rural	0.7938
45540	Freestone County, Texas	45	Rural	0.7910	0.7966	99945	Rural	0.7938
45541	Frio County, Texas	45	Rural	0.7910	0.7966	99945	Rural	0.7938
45542	Gaines County, Texas	45	Rural	0.7910	0.7966	99945	Rural	0.7938
45550	Galveston County, Texas	2920	Urban	0.9403	0.9973	26420	Urban	0.9688
45551	Garza County, Texas	45	Rural	0.7910	0.7966	99945	Rural	0.7938
45552	Gillespie County, Texas	45	Rural	0.7910	0.7966	99945	Rural	0.7938
45560	Glasscock County, Texas	45	Rural	0.7910	0.7966	99945	Rural	0.7938
45561	Goliad County, Texas	45	Rural	0.7910	0.8470	47020	Urban	0.8190
45562	Gonzales County, Texas	45	Rural	0.7910	0.7966	99945	Rural	0.7938
45563	Gray County, Texas	45	Rural	0.7910	0.7966	99945	Rural	0.7938
45564	Grayson County, Texas	7640	Urban	0.9617	0.9617	43300	Urban	0.9617
45570	Gregg County, Texas	4420	Urban	0.8739	0.8801	30980	Urban	0.8770
45580	Grimes County, Texas	45	Rural	0.7910	0.7966	99945	Rural	0.7938
45581	Guadaloupe County, Texas	7240	Urban	0.9023	0.9003	41700	Urban	0.9013
45582	Hale County, Texas	45	Rural	0.7910	0.7966	99945	Rural	0.7938
45583	Hall County, Texas	45	Rural	0.7910	0.7966	99945	Rural	0.7938
45590	Hamilton County, Texas	45	Rural	0.7910	0.7966	99945	Rural	0.7938
45591	Hansford County, Texas	45	Rural	0.7910	0.7966	99945	Rural	0.7938
45592	Hardeman County, Texas	45	Rural	0.7910	0.7966	99945	Rural	0.7938
45600	Hardin County, Texas	0840	Urban	0.8616	0.8616	13140	Urban	0.8616
45610	Harris County, Texas	3360	Urban	1.0117	0.9973	26420	Urban	1.0045
45620	Harrison County, Texas	4420	Urban	0.8739	0.7966	99945	Rural	0.8353
45621	Hartley County, Texas	45	Rural	0.7910	0.7966	99945	Rural	0.7938
45630	Haskell County, Texas	45	Rural	0.7910	0.7966	99945	Rural	0.7938
45631	Hays County, Texas	0640	Urban	0.9595	0.9595	12420	Urban	0.9595

TABLE 1.—FY 2006 IRF PPS TRANSITION WAGE INDEX TABLE—Continued

[For discharges occurring on or after October 1, 2005 and on or before September 30, 2006]

SSA state/ county code	County name	MSA No.	MSA urban/ rural	2006 MSA-based WI	2006 CBSA-based WI	CBSA No.	CBSA urban/ rural	Transition wage index *
45632	Hemphill County, Texas	45	Rural	0.7910	0.7966	99945	Rural	0.7938
45640	Henderson County, Texas	1920	Urban	1.0054	0.7966	99945	Rural	0.9010
45650	Hidalgo County, Texas	4880	Urban	0.8602	0.8602	32580	Urban	0.8602
45651	Hill County, Texas	45	Rural	0.7910	0.7966	99945	Rural	0.7938
45652	Hockley County, Texas	45	Rural	0.7910	0.7966	99945	Rural	0.7938
45653	Hood County, Texas	2800	Urban	0.9520	0.7966	99945	Rural	0.8743
45654	Hopkins County, Texas	45	Rural	0.7910	0.7966	99945	Rural	0.7938
45660	Houston County, Texas	45	Rural	0.7910	0.7966	99945	Rural	0.7938
45661	Howard County, Texas	45	Rural	0.7910	0.7966	99945	Rural	0.7938
45662	Hudspeth County, Texas	45	Rural	0.7910	0.7966	99945	Rural	0.7938
45670	Hunt County, Texas	1920	Urban	1.0054	1.0074	19124	Urban	1.0064
45671	Hutchinson County, Texas	45	Rural	0.7910	0.7966	99945	Rural	0.7938
45672	Irion County, Texas	45	Rural	0.7910	0.8167	41660	Urban	0.8039
45680	Jack County, Texas	45	Rural	0.7910	0.7966	99945	Rural	0.7938
45681	Jackson County, Texas	45	Rural	0.7910	0.7966	99945	Rural	0.7938
45690	Jasper County, Texas	45	Rural	0.7910	0.7966	99945	Rural	0.7938
45691	Jeff Davis County, Texas	45	Rural	0.7910	0.7966	99945	Rural	0.7938
45700	Jefferson County, Texas	0840	Urban	0.8616	0.8616	13140	Urban	0.8616
45710	Jim Hogg County, Texas	45	Rural	0.7910	0.7966	99945	Rural	0.7938
45711	Jim Wells County, Texas	45	Rural	0.7910	0.7966	99945	Rural	0.7938
45720	Johnson County, Texas	2800	Urban	0.9520	0.9472	23104	Urban	0.9496
45721	Jones County, Texas	45	Rural	0.7910	0.7850	10180	Urban	0.7880
45722	Karnes County, Texas	45	Rural	0.7910	0.7966	99945	Rural	0.7938
45730	Kaufman County, Texas	1920	Urban	1.0054	1.0074	19124	Urban	1.0064
45731	Kendall County, Texas	45	Rural	0.7910	0.9003	41700	Urban	0.8457
45732	Kenedy County, Texas	45	Rural	0.7910	0.7966	99945	Rural	0.7938
45733	Kent County, Texas	45	Rural	0.7910	0.7966	99945	Rural	0.7938
45734	Kerr County, Texas	45	Rural	0.7910	0.7966	99945	Rural	0.7938
45740	Kimble County, Texas	45	Rural	0.7910	0.7966	99945	Rural	0.7938
45741	King County, Texas	45	Rural	0.7910	0.7966	99945	Rural	0.7938
45742	Kinney County, Texas	45	Rural	0.7910	0.7966	99945	Rural	0.7938
45743	Kleberg County, Texas	45	Rural	0.7910	0.7966	99945	Rural	0.7938
45744	Knox County, Texas	45	Rural	0.7910	0.7966	99945	Rural	0.7938
45750	Lamar County, Texas	45	Rural	0.7910	0.7966	99945	Rural	0.7938
45751	Lamb County, Texas	45	Rural	0.7910	0.7966	99945	Rural	0.7938
45752	Lampasas County, Texas	45	Rural	0.7910	0.9242	28660	Urban	0.8576
45753	La Salle County, Texas	45	Rural	0.7910	0.7966	99945	Rural	0.7938
45754	Lavaca County, Texas	45	Rural	0.7910	0.7966	99945	Rural	0.7938
45755	Lee County, Texas	45	Rural	0.7910	0.7966	99945	Rural	0.7938
45756	Leon County, Texas	45	Rural	0.7910	0.7966	99945	Rural	0.7938
45757	Liberty County, Texas	3360	Urban	1.0117	0.9973	26420	Urban	1.0045
45758	Limestone County, Texas	45	Rural	0.7910	0.7966	99945	Rural	0.7938
45759	Lipscomb County, Texas	45	Rural	0.7910	0.7966	99945	Rural	0.7938
45760	Live Oak County, Texas	45	Rural	0.7910	0.7966	99945	Rural	0.7938
45761	Llano County, Texas	45	Rural	0.7910	0.7966	99945	Rural	0.7938
45762	Loving County, Texas	45	Rural	0.7910	0.7966	99945	Rural	0.7938
45770	Lubbock County, Texas	4600	Urban	0.8777	0.8777	31180	Urban	0.8777
45771	Lynn County, Texas	45	Rural	0.7910	0.7966	99945	Rural	0.7938
45772	Mc Culloch County, Texas	45	Rural	0.7910	0.7966	99945	Rural	0.7938
45780	Mc Lennan County, Texas	8800	Urban	0.8146	0.8146	47380	Urban	0.8146
45781	Mc Mullen County, Texas	45	Rural	0.7910	0.7966	99945	Rural	0.7938
45782	Madison County, Texas	45	Rural	0.7910	0.7966	99945	Rural	0.7938
45783	Marion County, Texas	45	Rural	0.7910	0.7966	99945	Rural	0.7938
45784	Martin County, Texas	45	Rural	0.7910	0.7966	99945	Rural	0.7938
45785	Mason County, Texas	45	Rural	0.7910	0.7966	99945	Rural	0.7938
45790	Matagorda County, Texas	45	Rural	0.7910	0.7966	99945	Rural	0.7938
45791	Maverick County, Texas	45	Rural	0.7910	0.7966	99945	Rural	0.7938
45792	Medina County, Texas	45	Rural	0.7910	0.9003	41700	Urban	0.8457
45793	Menard County, Texas	45	Rural	0.7910	0.7966	99945	Rural	0.7938
45794	Midland County, Texas	5800	Urban	0.9632	0.9384	33260	Urban	0.9508
45795	Milam County, Texas	45	Rural	0.7910	0.7966	99945	Rural	0.7938
45796	Mills County, Texas	45	Rural	0.7910	0.7966	99945	Rural	0.7938
45797	Mitchell County, Texas	45	Rural	0.7910	0.7966	99945	Rural	0.7938
45800	Montague County, Texas	45	Rural	0.7910	0.7966	99945	Rural	0.7938
45801	Montgomery County, Texas	3360	Urban	1.0117	0.9973	26420	Urban	1.0045
45802	Moore County, Texas	45	Rural	0.7910	0.7966	99945	Rural	0.7938
45803	Morris County, Texas	45	Rural	0.7910	0.7966	99945	Rural	0.7938
45804	Motley County, Texas	45	Rural	0.7910	0.7966	99945	Rural	0.7938

TABLE 1.—FY 2006 IRF PPS TRANSITION WAGE INDEX TABLE—Continued

[For discharges occurring on or after October 1, 2005 and on or before September 30, 2006]

SSA state/ county code	County name	MSA No.	MSA urban/ rural	2006 MSA-based WI	2006 CBSA-based WI	CBSA No.	CBSA urban/ rural	Transition wage index *
45810	Nacogdoches County, Texas	45	Rural	0.7910	0.7966	99945	Rural	0.7938
45820	Navarro County, Texas	45	Rural	0.7910	0.7966	99945	Rural	0.7938
45821	Newton County, Texas	45	Rural	0.7910	0.7966	99945	Rural	0.7938
45822	Nolan County, Texas	45	Rural	0.7910	0.7966	99945	Rural	0.7938
45830	Nueces County, Texas	1880	Urban	0.8647	0.8647	18580	Urban	0.8647
45831	Ochiltree County, Texas	45	Rural	0.7910	0.7966	99945	Rural	0.7938
45832	Oldham County, Texas	45	Rural	0.7910	0.7966	99945	Rural	0.7938
45840	Orange County, Texas	0840	Urban	0.8616	0.8616	13140	Urban	0.8616
45841	Palo Pinto County, Texas	45	Rural	0.7910	0.7966	99945	Rural	0.7938
45842	Panola County, Texas	45	Rural	0.7910	0.7966	99945	Rural	0.7938
45843	Parker County, Texas	2800	Urban	0.9520	0.9472	23104	Urban	0.9496
45844	Parmer County, Texas	45	Rural	0.7910	0.7966	99945	Rural	0.7938
45845	Pecos County, Texas	45	Rural	0.7910	0.7966	99945	Rural	0.7938
45850	Polk County, Texas	45	Rural	0.7910	0.7966	99945	Rural	0.7938
45860	Potter County, Texas	0320	Urban	0.9178	0.9178	11100	Urban	0.9178
45861	Presidio County, Texas	45	Rural	0.7910	0.7966	99945	Rural	0.7938
45870	Rains County, Texas	45	Rural	0.7910	0.7966	99945	Rural	0.7938
45871	Randall County, Texas	0320	Urban	0.9178	0.9178	11100	Urban	0.9178
45872	Reagan County, Texas	45	Rural	0.7910	0.7966	99945	Rural	0.7938
45873	Real County, Texas	45	Rural	0.7910	0.7966	99945	Rural	0.7938
45874	Red River County, Texas	45	Rural	0.7910	0.7966	99945	Rural	0.7938
45875	Reeves County, Texas	45	Rural	0.7910	0.7966	99945	Rural	0.7938
45876	Refugio County, Texas	45	Rural	0.7910	0.7966	99945	Rural	0.7938
45877	Roberts County, Texas	45	Rural	0.7910	0.7966	99945	Rural	0.7938
45878	Robertson County, Texas	45	Rural	0.7910	0.9243	17780	Urban	0.8577
45879	Rockwall County, Texas	1920	Urban	1.0054	1.0074	19124	Urban	1.0064
45880	Runnels County, Texas	45	Rural	0.7910	0.7966	99945	Rural	0.7938
45881	Rusk County, Texas	45	Rural	0.7910	0.8801	30980	Urban	0.8356
45882	Sabine County, Texas	45	Rural	0.7910	0.7966	99945	Rural	0.7938
45883	San Augustine County, Texas	45	Rural	0.7910	0.7966	99945	Rural	0.7938
45884	San Jacinto County, Texas	45	Rural	0.7910	0.9973	26420	Urban	0.8942
45885	San Patricio County, Texas	1880	Urban	0.8647	0.8647	18580	Urban	0.8647
45886	San Saba County, Texas	45	Rural	0.7910	0.7966	99945	Rural	0.7938
45887	Schleicher County, Texas	45	Rural	0.7910	0.7966	99945	Rural	0.7938
45888	Scurry County, Texas	45	Rural	0.7910	0.7966	99945	Rural	0.7938
45889	Shackelford County, Texas	45	Rural	0.7910	0.7966	99945	Rural	0.7938
45890	Shelby County, Texas	45	Rural	0.7910	0.7966	99945	Rural	0.7938
45891	Sherman County, Texas	45	Rural	0.7910	0.7966	99945	Rural	0.7938
45892	Smith County, Texas	8640	Urban	0.9502	0.9502	46340	Urban	0.9502
45893	Somervell County, Texas	45	Rural	0.7910	0.7966	99945	Rural	0.7938
45900	Starr County, Texas	45	Rural	0.7910	0.7966	99945	Rural	0.7938
45901	Stephens County, Texas	45	Rural	0.7910	0.7966	99945	Rural	0.7938
45902	Sterling County, Texas	45	Rural	0.7910	0.7966	99945	Rural	0.7938
45903	Stonewall County, Texas	45	Rural	0.7910	0.7966	99945	Rural	0.7938
45904	Sutton County, Texas	45	Rural	0.7910	0.7966	99945	Rural	0.7938
45905	Swisher County, Texas	45	Rural	0.7910	0.7966	99945	Rural	0.7938
45910	Tarrant County, Texas	2800	Urban	0.9520	0.9472	23104	Urban	0.9496
45911	Taylor County, Texas	0040	Urban	0.8009	0.7850	10180	Urban	0.7930
45912	Terrell County, Texas	45	Rural	0.7910	0.7966	99945	Rural	0.7938
45913	Terry County, Texas	45	Rural	0.7910	0.7966	99945	Rural	0.7938
45920	Throckmorton County, Texas	45	Rural	0.7910	0.7966	99945	Rural	0.7938
45921	Titus County, Texas	45	Rural	0.7910	0.7966	99945	Rural	0.7938
45930	Tom Green County, Texas	7200	Urban	0.8167	0.8167	41660	Urban	0.8167
45940	Travis County, Texas	0640	Urban	0.9595	0.9595	12420	Urban	0.9595
45941	Trinity County, Texas	45	Rural	0.7910	0.7966	99945	Rural	0.7938
45942	Tyler County, Texas	45	Rural	0.7910	0.7966	99945	Rural	0.7938
45943	Upshur County, Texas	4420	Urban	0.8739	0.8801	30980	Urban	0.8770
45944	Upton County, Texas	45	Rural	0.7910	0.7966	99945	Rural	0.7938
45945	Uvalde County, Texas	45	Rural	0.7910	0.7966	99945	Rural	0.7938
45946	Val Verde County, Texas	45	Rural	0.7910	0.7966	99945	Rural	0.7938
45947	Van Zandt County, Texas	45	Rural	0.7910	0.7966	99945	Rural	0.7938
45948	Victoria County, Texas	8750	Urban	0.8469	0.8470	47020	Urban	0.8470
45949	Walker County, Texas	45	Rural	0.7910	0.7966	99945	Rural	0.7938
45950	Waller County, Texas	3360	Urban	1.0117	0.9973	26420	Urban	1.0045
45951	Ward County, Texas	45	Rural	0.7910	0.7966	99945	Rural	0.7938
45952	Washington County, Texas	45	Rural	0.7910	0.7966	99945	Rural	0.7938
45953	Webb County, Texas	4080	Urban	0.8747	0.8747	29700	Urban	0.8747
45954	Wharton County, Texas	45	Rural	0.7910	0.7966	99945	Rural	0.7938

TABLE 1.—FY 2006 IRF PPS TRANSITION WAGE INDEX TABLE—Continued

[For discharges occurring on or after October 1, 2005 and on or before September 30, 2006]

SSA state/ county code	County name	MSA No.	MSA urban/ rural	2006 MSA-based WI	2006 CBSA-based WI	CBSA No.	CBSA urban/ rural	Transition wage index *
45955	Wheeler County, Texas	45	Rural	0.7910	0.7966	99945	Rural	0.7938
45960	Wichita County, Texas	9080	Urban	0.8395	0.8332	48660	Urban	0.8364
45961	Wilbarger County, Texas	45	Rural	0.7910	0.7966	99945	Rural	0.7938
45962	Willacy County, Texas	45	Rural	0.7910	0.7966	99945	Rural	0.7938
45970	Williamson County, Texas	0640	Urban	0.9595	0.9595	12420	Urban	0.9595
45971	Wilson County, Texas	7240	Urban	0.9023	0.9003	41700	Urban	0.9013
45972	Winkler County, Texas	45	Rural	0.7910	0.7966	99945	Rural	0.7938
45973	Wise County, Texas	45	Rural	0.7910	0.9472	23104	Urban	0.8691
45974	Wood County, Texas	45	Rural	0.7910	0.7966	99945	Rural	0.7938
45980	Yoakum County, Texas	45	Rural	0.7910	0.7966	99945	Rural	0.7938
45981	Young County, Texas	45	Rural	0.7910	0.7966	99945	Rural	0.7938
45982	Zapata County, Texas	45	Rural	0.7910	0.7966	99945	Rural	0.7938
45983	Zavala County, Texas	45	Rural	0.7910	0.7966	99945	Rural	0.7938
46000	Beaver County, Utah	46	Rural	0.8843	0.8287	99946	Rural	0.8565
46010	Box Elder County, Utah	46	Rural	0.8843	0.8287	99946	Rural	0.8565
46020	Cache County, Utah	46	Rural	0.8843	0.9094	30860	Urban	0.8969
46030	Carbon County, Utah	46	Rural	0.8843	0.8287	99946	Rural	0.8565
46040	Daggett County, Utah	46	Rural	0.8843	0.8287	99946	Rural	0.8565
46050	Davis County, Utah	7160	Urban	0.9487	0.9216	36260	Urban	0.9352
46060	Duchesne County, Utah	46	Rural	0.8843	0.8287	99946	Rural	0.8565
46070	Emery County, Utah	46	Rural	0.8843	0.8287	99946	Rural	0.8565
46080	Garfield County, Utah	46	Rural	0.8843	0.8287	99946	Rural	0.8565
46090	Grand County, Utah	46	Rural	0.8843	0.8287	99946	Rural	0.8565
46100	Iron County, Utah	46	Rural	0.8843	0.8287	99946	Rural	0.8565
46110	Juab County, Utah	46	Rural	0.8843	0.9588	39340	Urban	0.9216
46120	Kane County, Utah	2620	Urban	1.0611	0.8287	99946	Rural	0.9449
46130	Millard County, Utah	46	Rural	0.8843	0.8287	99946	Rural	0.8565
46140	Morgan County, Utah	46	Rural	0.8843	0.9216	36260	Urban	0.9030
46150	Piute County, Utah	46	Rural	0.8843	0.8287	99946	Rural	0.8565
46160	Rich County, Utah	46	Rural	0.8843	0.8287	99946	Rural	0.8565
46170	Salt Lake County, Utah	7160	Urban	0.9487	0.9561	41620	Urban	0.9524
46180	San Juan County, Utah	46	Rural	0.8843	0.8287	99946	Rural	0.8565
46190	Sanpete County, Utah	46	Rural	0.8843	0.8287	99946	Rural	0.8565
46200	Sevier County, Utah	46	Rural	0.8843	0.8287	99946	Rural	0.8565
46210	Summit County, Utah	46	Rural	0.8843	0.9561	41620	Urban	0.9202
46220	Tooele County, Utah	46	Rural	0.8843	0.9561	41620	Urban	0.9202
46230	Uintah County, Utah	46	Rural	0.8843	0.8287	99946	Rural	0.8565
46240	Utah County, Utah	6520	Urban	0.9613	0.9588	39340	Urban	0.9601
46250	Wasatch County, Utah	46	Rural	0.8843	0.8287	99946	Rural	0.8565
46260	Washington County, Utah	46	Rural	0.8843	0.9458	41100	Urban	0.9151
46270	Wayne County, Utah	46	Rural	0.8843	0.8287	99946	Rural	0.8565
46280	Weber County, Utah	7160	Urban	0.9487	0.9216	36260	Urban	0.9352
47000	Addison County, Vermont	47	Rural	0.9375	0.9375	99947	Rural	0.9375
47010	Bennington County, Vermont	47	Rural	0.9375	0.9375	99947	Rural	0.9375
47020	Caledonia County, Vermont	47	Rural	0.9375	0.9375	99947	Rural	0.9375
47030	Chittenden County, Vermont	1303	Urban	0.9322	0.9322	15540	Urban	0.9322
47040	Essex County, Vermont	47	Rural	0.9375	0.9375	99947	Rural	0.9375
47050	Franklin County, Vermont	1303	Urban	0.9322	0.9322	15540	Urban	0.9322
47060	Grand Isle County, Vermont	1303	Urban	0.9322	0.9322	15540	Urban	0.9322
47070	Lamoille County, Vermont	47	Rural	0.9375	0.9375	99947	Rural	0.9375
47080	Orange County, Vermont	47	Rural	0.9375	0.9375	99947	Rural	0.9375
47090	Orleans County, Vermont	47	Rural	0.9375	0.9375	99947	Rural	0.9375
47100	Rutland County, Vermont	47	Rural	0.9375	0.9375	99947	Rural	0.9375
47110	Washington County, Vermont	47	Rural	0.9375	0.9375	99947	Rural	0.9375
47120	Windham County, Vermont	47	Rural	0.9375	0.9375	99947	Rural	0.9375
47130	Windsor County, Vermont	47	Rural	0.9375	0.9375	99947	Rural	0.9375
48010	St Croix County, Virgin Islands	48	Rural	0.7456	0.7456	99948	Rural	0.7456
48020	St Thomas-John County, Virgin Islands	48	Rural	0.7456	0.7456	99948	Rural	0.7456
49000	Accomack County, Virginia	49	Rural	0.8479	0.8049	99949	Rural	0.8264
49010	Albemarle County, Virginia	1540	Urban	1.0294	1.0294	16820	Urban	1.0294
49011	Alexandria City County, Virginia	8840	Urban	1.0971	1.1023	47894	Urban	1.0997
49020	Alleghany County, Virginia	49	Rural	0.8479	0.8049	99949	Rural	0.8264
49030	Amelia County, Virginia	49	Rural	0.8479	0.9397	40060	Urban	0.8938
49040	Amherst County, Virginia	4640	Urban	0.9017	0.9017	31340	Urban	0.9017
49050	Appomattox County, Virginia	49	Rural	0.8479	0.9017	31340	Urban	0.8748
49060	Arlington County, Virginia	8840	Urban	1.0971	1.1023	47894	Urban	1.0997
49070	Augusta County, Virginia	49	Rural	0.8479	0.8049	99949	Rural	0.8264
49080	Bath County, Virginia	49	Rural	0.8479	0.8049	99949	Rural	0.8264

TABLE 1.—FY 2006 IRF PPS TRANSITION WAGE INDEX TABLE—Continued

[For discharges occurring on or after October 1, 2005 and on or before September 30, 2006]

SSA state/ county code	County name	MSA No.	MSA urban/ rural	2006 MSA-based WI	2006 CBSA-based WI	CBSA No.	CBSA urban/ rural	Transition wage index *
49088	Bedford City County, Virginia	4640	Urban	0.9017	0.9017	31340	Urban	0.9017
49090	Bedford County, Virginia	4640	Urban	0.9017	0.9017	31340	Urban	0.9017
49100	Bland County, Virginia	49	Rural	0.8479	0.8049	99949	Rural	0.8264
49110	Botetourt County, Virginia	6800	Urban	0.8428	0.8415	40220	Urban	0.8422
49111	Bristol City County, Virginia	3660	Urban	0.8202	0.8240	28700	Urban	0.8221
49120	Brunswick County, Virginia	49	Rural	0.8479	0.8049	99949	Rural	0.8264
49130	Buchanan County, Virginia	49	Rural	0.8479	0.8049	99949	Rural	0.8264
49140	Buckingham County, Virginia	49	Rural	0.8479	0.8049	99949	Rural	0.8264
49141	Buena Vista City County, Virginia	49	Rural	0.8479	0.8049	99949	Rural	0.8264
49150	Campbell County, Virginia	4640	Urban	0.9017	0.9017	31340	Urban	0.9017
49160	Caroline County, Virginia	49	Rural	0.8479	0.9397	40060	Urban	0.8938
49170	Carroll County, Virginia	49	Rural	0.8479	0.8049	99949	Rural	0.8264
49180	Charles City County, Virginia	6760	Urban	0.9397	0.9397	40060	Urban	0.9397
49190	Charlotte County, Virginia	49	Rural	0.8479	0.8049	99949	Rural	0.8264
49191	Charlottesville City County, Virginia	1540	Urban	1.0294	1.0294	16820	Urban	1.0294
49194	Chesapeake County, Virginia	5720	Urban	0.8894	0.8894	47260	Urban	0.8894
49200	Chesterfield County, Virginia	6760	Urban	0.9397	0.9397	40060	Urban	0.9397
49210	Clarke County, Virginia	8840	Urban	1.0971	1.1023	47894	Urban	1.0997
49211	Clifton Forge City County, Virginia	49	Rural	0.8479	0.8049	99949	Rural	0.8264
49212	Colonial Heights County, Virginia	6760	Urban	0.9397	0.9397	40060	Urban	0.9397
49213	Covington City County, Virginia	49	Rural	0.8479	0.8049	99949	Rural	0.8264
49220	Craig County, Virginia	49	Rural	0.8479	0.8415	40220	Urban	0.8447
49230	Culpeper County, Virginia	8840	Urban	1.0971	0.8049	99949	Rural	0.9510
49240	Cumberland County, Virginia	49	Rural	0.8479	0.9397	40060	Urban	0.8938
49241	Danville City County, Virginia	1950	Urban	0.8643	0.8643	19260	Urban	0.8643
49250	Dickenson County, Virginia	49	Rural	0.8479	0.8049	99949	Rural	0.8264
49260	Dinniddie County, Virginia	6760	Urban	0.9397	0.9397	40060	Urban	0.9397
49270	Emporia County, Virginia	49	Rural	0.8479	0.8049	99949	Rural	0.8264
49280	Essex County, Virginia	49	Rural	0.8479	0.8049	99949	Rural	0.8264
49288	Fairfax City County, Virginia	8840	Urban	1.0971	1.1023	47894	Urban	1.0997
49290	Fairfax County, Virginia	8840	Urban	1.0971	1.1023	47894	Urban	1.0997
49291	Falls Church City County, Virginia	8840	Urban	1.0971	1.1023	47894	Urban	1.0997
49300	Fauquier County, Virginia	8840	Urban	1.0971	1.1023	47894	Urban	1.0997
49310	Floyd County, Virginia	49	Rural	0.8479	0.8049	99949	Rural	0.8264
49320	Fluvanna County, Virginia	1540	Urban	1.0294	1.0294	16820	Urban	1.0294
49328	Franklin City County, Virginia	49	Rural	0.8479	0.8049	99949	Rural	0.8264
49330	Franklin County, Virginia	49	Rural	0.8479	0.8415	40220	Urban	0.8447
49340	Frederick County, Virginia	49	Rural	0.8479	1.0496	49020	Urban	0.9488
49342	Fredericksburg City County, Virginia	8840	Urban	1.0971	1.1023	47894	Urban	1.0997
49343	Galax City County, Virginia	49	Rural	0.8479	0.8049	99949	Rural	0.8264
49350	Giles County, Virginia	49	Rural	0.8479	0.7951	13980	Urban	0.8215
49360	Gloucester County, Virginia	5720	Urban	0.8894	0.8894	47260	Urban	0.8894
49370	Goochland County, Virginia	6760	Urban	0.9397	0.9397	40060	Urban	0.9397
49380	Grayson County, Virginia	49	Rural	0.8479	0.8049	99949	Rural	0.8264
49390	Greene County, Virginia	1540	Urban	1.0294	1.0294	16820	Urban	1.0294
49400	Greensville County, Virginia	49	Rural	0.8479	0.8049	99949	Rural	0.8264
49410	Halifax County, Virginia	49	Rural	0.8479	0.8049	99949	Rural	0.8264
49411	Hampton City County, Virginia	5720	Urban	0.8894	0.8894	47260	Urban	0.8894
49420	Hanover County, Virginia	6760	Urban	0.9397	0.9397	40060	Urban	0.9397
49421	Harrisonburg City County, Virginia	49	Rural	0.8479	0.9275	25500	Urban	0.8877
49430	Henrico County, Virginia	6760	Urban	0.9397	0.9397	40060	Urban	0.9397
49440	Henry County, Virginia	49	Rural	0.8479	0.8049	99949	Rural	0.8264
49450	Highland County, Virginia	49	Rural	0.8479	0.8049	99949	Rural	0.8264
49451	Hopewell City County, Virginia	6760	Urban	0.9397	0.9397	40060	Urban	0.9397
49460	Isle Of Wight County, Virginia	5720	Urban	0.8894	0.8894	47260	Urban	0.8894
49470	James City Co County, Virginia	5720	Urban	0.8894	0.8894	47260	Urban	0.8894
49480	King And Queen County, Virginia	49	Rural	0.8479	0.9397	40060	Urban	0.8938
49490	King George County, Virginia	8840	Urban	1.0971	0.8049	99949	Rural	0.9510
49500	King William County, Virginia	49	Rural	0.8479	0.9397	40060	Urban	0.8938
49510	Lancaster County, Virginia	49	Rural	0.8479	0.8049	99949	Rural	0.8264
49520	Lee County, Virginia	49	Rural	0.8479	0.8049	99949	Rural	0.8264
49522	Lexington County, Virginia	49	Rural	0.8479	0.8049	99949	Rural	0.8264
49530	Loudoun County, Virginia	8840	Urban	1.0971	1.1023	47894	Urban	1.0997
49540	Louisa County, Virginia	49	Rural	0.8479	0.9397	40060	Urban	0.8938
49550	Lunenburg County, Virginia	49	Rural	0.8479	0.8049	99949	Rural	0.8264
49551	Lynchburg City County, Virginia	4640	Urban	0.9017	0.9017	31340	Urban	0.9017
49560	Madison County, Virginia	49	Rural	0.8479	0.8049	99949	Rural	0.8264
49561	Martinsville City County, Virginia	49	Rural	0.8479	0.8049	99949	Rural	0.8264

TABLE 1.—FY 2006 IRF PPS TRANSITION WAGE INDEX TABLE—Continued

[For discharges occurring on or after October 1, 2005 and on or before September 30, 2006]

SSA state/ county code	County name	MSA No.	MSA urban/ rural	2006 MSA-based WI	2006 CBSA-based WI	CBSA No.	CBSA urban/ rural	Transition wage index *
49563	Manassas City County, Virginia	8840	Urban	1.0971	1.1023	47894	Urban	1.0997
49565	Manassas Park City County, Virginia	8840	Urban	1.0971	1.1023	47894	Urban	1.0997
49570	Mathews County, Virginia	5720	Urban	0.8894	0.8894	47260	Urban	0.8894
49580	Mecklenburg County, Virginia	49	Rural	0.8479	0.8049	99949	Rural	0.8264
49590	Middlesex County, Virginia	49	Rural	0.8479	0.8049	99949	Rural	0.8264
49600	Montgomery County, Virginia	49	Rural	0.8479	0.7951	13980	Urban	0.8215
49610	Nansemond, Virginia	49	Rural	0.8479	0.8049	99949	Rural	0.8264
49620	Nelson County, Virginia	49	Rural	0.8479	1.0294	16820	Urban	0.9387
49621	New Kent County, Virginia	6760	Urban	0.9397	0.9397	40060	Urban	0.9397
49622	Newport News City County, Virginia	5720	Urban	0.8894	0.8894	47260	Urban	0.8894
49641	Norfolk City County, Virginia	5720	Urban	0.8894	0.8894	47260	Urban	0.8894
49650	Northampton County, Virginia	49	Rural	0.8479	0.8049	99949	Rural	0.8264
49660	Northumberland County, Virginia	49	Rural	0.8479	0.8049	99949	Rural	0.8264
49661	Norton City County, Virginia	49	Rural	0.8479	0.8049	99949	Rural	0.8264
49670	Nottoway County, Virginia	49	Rural	0.8479	0.8049	99949	Rural	0.8264
49680	Orange County, Virginia	49	Rural	0.8479	0.8049	99949	Rural	0.8264
49690	Page County, Virginia	49	Rural	0.8479	0.8049	99949	Rural	0.8264
49700	Patrick County, Virginia	49	Rural	0.8479	0.8049	99949	Rural	0.8264
49701	Petersburg City County, Virginia	6760	Urban	0.9397	0.9397	40060	Urban	0.9397
49710	Pittsylvania County, Virginia	1950	Urban	0.8643	0.8643	19260	Urban	0.8643
49711	Portsmouth City County, Virginia	5720	Urban	0.8894	0.8894	47260	Urban	0.8894
49712	Poquoson City County, Virginia	5720	Urban	0.8894	0.8894	47260	Urban	0.8894
49720	Powhatan County, Virginia	6760	Urban	0.9397	0.9397	40060	Urban	0.9397
49730	Prince Edward County, Virginia	49	Rural	0.8479	0.8049	99949	Rural	0.8264
49740	Prince George County, Virginia	6760	Urban	0.9397	0.9397	40060	Urban	0.9397
49750	Prince William County, Virginia	8840	Urban	1.0971	1.1023	47894	Urban	1.0997
49770	Pulaski County, Virginia	49	Rural	0.8479	0.7951	13980	Urban	0.8215
49771	Radford City County, Virginia	49	Rural	0.8479	0.7951	13980	Urban	0.8215
49780	Rappahannock County, Virginia	49	Rural	0.8479	0.8049	99949	Rural	0.8264
49790	Richmond County, Virginia	49	Rural	0.8479	0.8049	99949	Rural	0.8264
49791	Richmond City County, Virginia	6760	Urban	0.9397	0.9397	40060	Urban	0.9397
49800	Roanoke County, Virginia	6800	Urban	0.8428	0.8415	40220	Urban	0.8422
49801	Roanoke City County, Virginia	6800	Urban	0.8428	0.8415	40220	Urban	0.8422
49810	Rockbridge County, Virginia	49	Rural	0.8479	0.8049	99949	Rural	0.8264
49820	Rockingham County, Virginia	49	Rural	0.8479	0.9275	25500	Urban	0.8877
49830	Russell County, Virginia	49	Rural	0.8479	0.8049	99949	Rural	0.8264
49838	Salem County, Virginia	6800	Urban	0.8428	0.8415	40220	Urban	0.8422
49840	Scott County, Virginia	3660	Urban	0.8202	0.8240	28700	Urban	0.8221
49850	Shenandoah County, Virginia	49	Rural	0.8479	0.8049	99949	Rural	0.8264
49860	Smyth County, Virginia	49	Rural	0.8479	0.8049	99949	Rural	0.8264
49867	South Boston City County, Virginia	49	Rural	0.8479	0.8049	99949	Rural	0.8264
49870	Southampton County, Virginia	49	Rural	0.8479	0.8049	99949	Rural	0.8264
49880	Spotsylvania County, Virginia	8840	Urban	1.0971	1.1023	47894	Urban	1.0997
49890	Stafford County, Virginia	8840	Urban	1.0971	1.1023	47894	Urban	1.0997
49891	Staunton City County, Virginia	49	Rural	0.8479	0.8049	99949	Rural	0.8264
49892	Suffolk City County, Virginia	5720	Urban	0.8894	0.8894	47260	Urban	0.8894
49900	Surry County, Virginia	49	Rural	0.8479	0.8894	47260	Urban	0.8687
49910	Sussex County, Virginia	49	Rural	0.8479	0.9397	40060	Urban	0.8938
49920	Tazewell County, Virginia	49	Rural	0.8479	0.8049	99949	Rural	0.8264
49921	Virginia Beach City County, Virginia	5720	Urban	0.8894	0.8894	47260	Urban	0.8894
49930	Warren County, Virginia	8840	Urban	1.0971	1.1023	47894	Urban	1.0997
49950	Washington County, Virginia	3660	Urban	0.8202	0.8240	28700	Urban	0.8221
49951	Waynesboro City County, Virginia	49	Rural	0.8479	0.8049	99949	Rural	0.8264
49960	Westmoreland County, Virginia	49	Rural	0.8479	0.8049	99949	Rural	0.8264
49961	Williamsburg City County, Virginia	5720	Urban	0.8894	0.8894	47260	Urban	0.8894
49962	Winchester City County, Virginia	49	Rural	0.8479	1.0496	49020	Urban	0.9488
49970	Wise County, Virginia	49	Rural	0.8479	0.8049	99949	Rural	0.8264
49980	Wythe County, Virginia	49	Rural	0.8479	0.8049	99949	Rural	0.8264
49981	York County, Virginia	5720	Urban	0.8894	0.8894	47260	Urban	0.8894
50000	Adams County, Washington	50	Rural	1.0072	1.0312	99950	Rural	1.0192
50010	Asotin County, Washington	50	Rural	1.0072	0.9314	30300	Urban	0.9693
50020	Benton County, Washington	6740	Urban	1.0520	1.0520	28420	Urban	1.0520
50030	Chelan County, Washington	50	Rural	1.0072	0.9427	48300	Urban	0.9750
50040	Clallam County, Washington	50	Rural	1.0072	1.0312	99950	Rural	1.0192
50050	Clark County, Washington	6440	Urban	1.1403	1.1403	38900	Urban	1.1403
50060	Columbia County, Washington	50	Rural	1.0072	1.0312	99950	Rural	1.0192
50070	Cowlitz County, Washington	50	Rural	1.0072	1.0224	31020	Urban	1.0148
50080	Douglas County, Washington	50	Rural	1.0072	0.9427	48300	Urban	0.9750

TABLE 1.—FY 2006 IRF PPS TRANSITION WAGE INDEX TABLE—Continued

[For discharges occurring on or after October 1, 2005 and on or before September 30, 2006]

SSA state/ county code	County name	MSA No.	MSA urban/ rural	2006 MSA-based WI	2006 CBSA-based WI	CBSA No.	CBSA urban/ rural	Transition wage index *
50090	Ferry County, Washington	50	Rural	1.0072	1.0312	99950	Rural	1.0192
50100	Franklin County, Washington	6740	Urban	1.0520	1.0520	28420	Urban	1.0520
50110	Garfield County, Washington	50	Rural	1.0072	1.0312	99950	Rural	1.0192
50120	Grant County, Washington	50	Rural	1.0072	1.0312	99950	Rural	1.0192
50130	Grays Harbor County, Washington	50	Rural	1.0072	1.0312	99950	Rural	1.0192
50140	Island County, Washington	7600	Urban	1.1479	1.0312	99950	Rural	1.0896
50150	Jefferson County, Washington	50	Rural	1.0072	1.0312	99950	Rural	1.0192
50160	King County, Washington	7600	Urban	1.1479	1.1492	42644	Urban	1.1486
50170	Kitsap County, Washington	1150	Urban	1.0614	1.0614	14740	Urban	1.0614
50180	Kittitas County, Washington	50	Rural	1.0072	1.0312	99950	Rural	1.0192
50190	Klickitat County, Washington	50	Rural	1.0072	1.0312	99950	Rural	1.0192
50200	Lewis County, Washington	50	Rural	1.0072	1.0312	99950	Rural	1.0192
50210	Lincoln County, Washington	50	Rural	1.0072	1.0312	99950	Rural	1.0192
50220	Mason County, Washington	50	Rural	1.0072	1.0312	99950	Rural	1.0192
50230	Okanogan County, Washington	50	Rural	1.0072	1.0312	99950	Rural	1.0192
50240	Pacific County, Washington	50	Rural	1.0072	1.0312	99950	Rural	1.0192
50250	Pend Oreille County, Washington	50	Rural	1.0072	1.0312	99950	Rural	1.0192
50260	Pierce County, Washington	8200	Urban	1.1078	1.1078	45104	Urban	1.1078
50270	San Juan County, Washington	50	Rural	1.0072	1.0312	99950	Rural	1.0192
50280	Skagit County, Washington	50	Rural	1.0072	1.0576	34580	Urban	1.0324
50290	Skamania County, Washington	50	Rural	1.0072	1.1403	38900	Urban	1.0738
50300	Snohomish County, Washington	7600	Urban	1.1479	1.1492	42644	Urban	1.1486
50310	Spokane County, Washington	7840	Urban	1.0660	1.0660	44060	Urban	1.0660
50320	Stevens County, Washington	50	Rural	1.0072	1.0312	99950	Rural	1.0192
50330	Thurston County, Washington	5910	Urban	1.1006	1.1006	36500	Urban	1.1006
50340	Wahkiakum County, Washington	50	Rural	1.0072	1.0312	99950	Rural	1.0192
50350	Walla Walla County, Washington	50	Rural	1.0072	1.0312	99950	Rural	1.0192
50360	Whatcom County, Washington	0860	Urban	1.1642	1.1642	13380	Urban	1.1642
50370	Whitman County, Washington	50	Rural	1.0072	1.0312	99950	Rural	1.0192
50380	Yakima County, Washington	9260	Urban	1.0322	1.0322	49420	Urban	1.0322
51000	Barbour County, W Virginia	51	Rural	0.8083	0.7865	99951	Rural	0.7974
51010	Berkeley County, W Virginia	8840	Urban	1.0971	0.9715	25180	Urban	1.0343
51020	Boone County, W Virginia	51	Rural	0.8083	0.8876	16620	Urban	0.8480
51030	Braxton County, W Virginia	51	Rural	0.8083	0.7865	99951	Rural	0.7974
51040	Brooke County, W Virginia	8080	Urban	0.8280	0.8280	48260	Urban	0.8280
51050	Cabell County, W Virginia	3400	Urban	0.9564	0.9564	26580	Urban	0.9564
51060	Calhoun County, W Virginia	51	Rural	0.8083	0.7865	99951	Rural	0.7974
51070	Clay County, W Virginia	51	Rural	0.8083	0.8876	16620	Urban	0.8480
51080	Doddridge County, W Virginia	51	Rural	0.8083	0.7865	99951	Rural	0.7974
51090	Fayette County, W Virginia	51	Rural	0.8083	0.7865	99951	Rural	0.7974
51100	Gilmer County, W Virginia	51	Rural	0.8083	0.7865	99951	Rural	0.7974
51110	Grant County, W Virginia	51	Rural	0.8083	0.7865	99951	Rural	0.7974
51120	Greenbrier County, W Virginia	51	Rural	0.8083	0.7865	99951	Rural	0.7974
51130	Hampshire County, W Virginia	51	Rural	0.8083	1.0496	49020	Urban	0.9290
51140	Hancock County, W Virginia	8080	Urban	0.8280	0.8280	48260	Urban	0.8280
51150	Hardy County, W Virginia	51	Rural	0.8083	0.7865	99951	Rural	0.7974
51160	Harrison County, W Virginia	51	Rural	0.8083	0.7865	99951	Rural	0.7974
51170	Jackson County, W Virginia	51	Rural	0.8083	0.7865	99951	Rural	0.7974
51180	Jefferson County, W Virginia	8840	Urban	1.0971	1.1023	47894	Urban	1.0997
51190	Kanawha County, W Virginia	1480	Urban	0.8876	0.8876	16620	Urban	0.8876
51200	Lewis County, W Virginia	51	Rural	0.8083	0.7865	99951	Rural	0.7974
51210	Lincoln County, W Virginia	51	Rural	0.8083	0.8876	16620	Urban	0.8480
51220	Logan County, W Virginia	51	Rural	0.8083	0.7865	99951	Rural	0.7974
51230	Mc Dowell County, W Virginia	51	Rural	0.8083	0.7865	99951	Rural	0.7974
51240	Marion County, W Virginia	51	Rural	0.8083	0.7865	99951	Rural	0.7974
51250	Marshall County, W Virginia	9000	Urban	0.7449	0.7449	48540	Urban	0.7449
51260	Mason County, W Virginia	51	Rural	0.8083	0.7865	99951	Rural	0.7974
51270	Mercer County, W Virginia	51	Rural	0.8083	0.7865	99951	Rural	0.7974
51280	Mineral County, W Virginia	1900	Urban	0.8662	0.8662	19060	Urban	0.8662
51290	Mingo County, W Virginia	51	Rural	0.8083	0.7865	99951	Rural	0.7974
51300	Monongalia County, W Virginia	51	Rural	0.8083	0.8730	34060	Urban	0.8407
51310	Monroe County, W Virginia	51	Rural	0.8083	0.7865	99951	Rural	0.7974
51320	Morgan County, W Virginia	51	Rural	0.8083	0.9715	25180	Urban	0.8899
51330	Nicholas County, W Virginia	51	Rural	0.8083	0.7865	99951	Rural	0.7974
51340	Ohio County, W Virginia	9000	Urban	0.7449	0.7449	48540	Urban	0.7449
51350	Pendleton County, W Virginia	51	Rural	0.8083	0.7865	99951	Rural	0.7974
51360	Pleasants County, W Virginia	51	Rural	0.8083	0.8288	37620	Urban	0.8186
51370	Pocahontas County, W Virginia	51	Rural	0.8083	0.7865	99951	Rural	0.7974

TABLE 1.—FY 2006 IRF PPS TRANSITION WAGE INDEX TABLE—Continued

[For discharges occurring on or after October 1, 2005 and on or before September 30, 2006]

SSA state/ county code	County name	MSA No.	MSA urban/ rural	2006 MSA-based WI	2006 CBSA-based WI	CBSA No.	CBSA urban/ rural	Transition wage index *
51380	Preston County, W Virginia	51	Rural	0.8083	0.8730	34060	Urban	0.8407
51390	Putnam County, W Virginia	1480	Urban	0.8876	0.8876	16620	Urban	0.8876
51400	Raleigh County, W Virginia	51	Rural	0.8083	0.7865	99951	Rural	0.7974
51410	Randolph County, W Virginia	51	Rural	0.8083	0.7865	99951	Rural	0.7974
51420	Ritchie County, W Virginia	51	Rural	0.8083	0.7865	99951	Rural	0.7974
51430	Roane County, W Virginia	51	Rural	0.8083	0.7865	99951	Rural	0.7974
51440	Summers County, W Virginia	51	Rural	0.8083	0.7865	99951	Rural	0.7974
51450	Taylor County, W Virginia	51	Rural	0.8083	0.7865	99951	Rural	0.7974
51460	Tucker County, W Virginia	51	Rural	0.8083	0.7865	99951	Rural	0.7974
51470	Tyler County, W Virginia	51	Rural	0.8083	0.7865	99951	Rural	0.7974
51480	Upshur County, W Virginia	51	Rural	0.8083	0.7865	99951	Rural	0.7974
51490	Wayne County, W Virginia	3400	Urban	0.9564	0.9564	26580	Urban	0.9564
51500	Webster County, W Virginia	51	Rural	0.8083	0.7865	99951	Rural	0.7974
51510	Wetzel County, W Virginia	51	Rural	0.8083	0.7865	99951	Rural	0.7974
51520	Wirt County, W Virginia	51	Rural	0.8083	0.8288	37620	Urban	0.8186
51530	Wood County, W Virginia	6020	Urban	0.8288	0.8288	37620	Urban	0.8288
51540	Wyoming County, W Virginia	51	Rural	0.8083	0.7865	99951	Rural	0.7974
52000	Adams County, Wisconsin	52	Rural	0.9498	0.9492	99952	Rural	0.9495
52010	Ashland County, Wisconsin	52	Rural	0.9498	0.9492	99952	Rural	0.9495
52020	Barron County, Wisconsin	52	Rural	0.9498	0.9492	99952	Rural	0.9495
52030	Bayfield County, Wisconsin	52	Rural	0.9498	0.9492	99952	Rural	0.9495
52040	Brown County, Wisconsin	3080	Urban	0.9586	0.9590	24580	Urban	0.9588
52050	Buffalo County, Wisconsin	52	Rural	0.9498	0.9492	99952	Rural	0.9495
52060	Burnett County, Wisconsin	52	Rural	0.9498	0.9492	99952	Rural	0.9495
52070	Calumet County, Wisconsin	0460	Urban	0.9115	0.9131	11540	Urban	0.9123
52080	Chippewa County, Wisconsin	2290	Urban	0.9139	0.9139	20740	Urban	0.9139
52090	Clark County, Wisconsin	52	Rural	0.9498	0.9492	99952	Rural	0.9495
52100	Columbia County, Wisconsin	52	Rural	0.9498	1.0306	31540	Urban	0.9902
52110	Crawford County, Wisconsin	52	Rural	0.9498	0.9492	99952	Rural	0.9495
52120	Dane County, Wisconsin	4720	Urban	1.0395	1.0306	31540	Urban	1.0351
52130	Dodge County, Wisconsin	52	Rural	0.9498	0.9492	99952	Rural	0.9495
52140	Door County, Wisconsin	52	Rural	0.9498	0.9492	99952	Rural	0.9495
52150	Douglas County, Wisconsin	2240	Urban	1.0356	1.0340	20260	Urban	1.0348
52160	Dunn County, Wisconsin	52	Rural	0.9498	0.9492	99952	Rural	0.9495
52170	Eau Claire County, Wisconsin	2290	Urban	0.9139	0.9139	20740	Urban	0.9139
52180	Florence County, Wisconsin	52	Rural	0.9498	0.9492	99952	Rural	0.9495
52190	Fond Du Lac County, Wisconsin	52	Rural	0.9498	0.9897	22540	Urban	0.9698
52200	Forest County, Wisconsin	52	Rural	0.9498	0.9492	99952	Rural	0.9495
52210	Grant County, Wisconsin	52	Rural	0.9498	0.9492	99952	Rural	0.9495
52220	Green County, Wisconsin	52	Rural	0.9498	0.9492	99952	Rural	0.9495
52230	Green Lake County, Wisconsin	52	Rural	0.9498	0.9492	99952	Rural	0.9495
52240	Iowa County, Wisconsin	52	Rural	0.9498	1.0306	31540	Urban	0.9902
52250	Iron County, Wisconsin	52	Rural	0.9498	0.9492	99952	Rural	0.9495
52260	Jackson County, Wisconsin	52	Rural	0.9498	0.9492	99952	Rural	0.9495
52270	Jefferson County, Wisconsin	52	Rural	0.9498	0.9492	99952	Rural	0.9495
52280	Juneau County, Wisconsin	52	Rural	0.9498	0.9492	99952	Rural	0.9495
52290	Kenosha County, Wisconsin	3800	Urban	0.9772	1.0342	29404	Urban	1.0057
52300	Kewaunee County, Wisconsin	52	Rural	0.9498	0.9590	24580	Urban	0.9544
52310	La Crosse County, Wisconsin	3870	Urban	0.9289	0.9289	29100	Urban	0.9289
52320	Lafayette County, Wisconsin	52	Rural	0.9498	0.9492	99952	Rural	0.9495
52330	Langlade County, Wisconsin	52	Rural	0.9498	0.9492	99952	Rural	0.9495
52340	Lincoln County, Wisconsin	52	Rural	0.9498	0.9492	99952	Rural	0.9495
52350	Manitowoc County, Wisconsin	52	Rural	0.9498	0.9492	99952	Rural	0.9495
52360	Marathon County, Wisconsin	8940	Urban	0.9570	0.9570	48140	Urban	0.9570
52370	Marinette County, Wisconsin	52	Rural	0.9498	0.9492	99952	Rural	0.9495
52380	Marquette County, Wisconsin	52	Rural	0.9498	0.9492	99952	Rural	0.9495
52381	Menominee County, Wisconsin	52	Rural	0.9498	0.9492	99952	Rural	0.9495
52390	Milwaukee County, Wisconsin	5080	Urban	1.0076	1.0076	33340	Urban	1.0076
52400	Monroe County, Wisconsin	52	Rural	0.9498	0.9492	99952	Rural	0.9495
52410	Oconto County, Wisconsin	52	Rural	0.9498	0.9590	24580	Urban	0.9544
52420	Oneida County, Wisconsin	52	Rural	0.9498	0.9492	99952	Rural	0.9495
52430	Outagamie County, Wisconsin	0460	Urban	0.9115	0.9131	11540	Urban	0.9123
52440	Ozaukee County, Wisconsin	5080	Urban	1.0076	1.0076	33340	Urban	1.0076
52450	Pepin County, Wisconsin	52	Rural	0.9498	0.9492	99952	Rural	0.9495
52460	Pierce County, Wisconsin	5120	Urban	1.1066	1.1066	133460	Urban	1.1066
52470	Polk County, Wisconsin	52	Rural	0.9498	0.9492	99952	Rural	0.9495
52480	Portage County, Wisconsin	52	Rural	0.9498	0.9492	99952	Rural	0.9495
52490	Price County, Wisconsin	52	Rural	0.9498	0.9492	99952	Rural	0.9495

TABLE 1.—FY 2006 IRF PPS TRANSITION WAGE INDEX TABLE—Continued

[For discharges occurring on or after October 1, 2005 and on or before September 30, 2006]

SSA state/ county code	County name	MSA No.	MSA urban/ rural	2006 MSA-based WI	2006 CBSA-based WI	CBSA No.	CBSA urban/ rural	Transition wage index *
52500	Racine County, Wisconsin	6600	Urban	0.9045	0.9045	39540	Urban	0.9045
52510	Richland County, Wisconsin	52	Rural	0.9498	0.9492	99952	Rural	0.9495
52520	Rock County, Wisconsin	3620	Urban	0.9583	0.9583	27500	Urban	0.9583
52530	Rusk County, Wisconsin	52	Rural	0.9498	0.9492	99952	Rural	0.9495
52540	St Croix County, Wisconsin	5120	Urban	1.1066	1.1066	33460	Urban	1.1066
52550	Sauk County, Wisconsin	52	Rural	0.9498	0.9492	99952	Rural	0.9495
52560	Sawyer County, Wisconsin	52	Rural	0.9498	0.9492	99952	Rural	0.9495
52570	Shawano County, Wisconsin	52	Rural	0.9498	0.9492	99952	Rural	0.9495
52580	Sheboygan County, Wisconsin	7620	Urban	0.8948	0.8948	43100	Urban	0.8948
52590	Taylor County, Wisconsin	52	Rural	0.9498	0.9492	99952	Rural	0.9495
52600	Trempealeau County, Wisconsin	52	Rural	0.9498	0.9492	99952	Rural	0.9495
52610	Vernon County, Wisconsin	52	Rural	0.9498	0.9492	99952	Rural	0.9495
52620	Vilas County, Wisconsin	52	Rural	0.9498	0.9492	99952	Rural	0.9495
52630	Walworth County, Wisconsin	52	Rural	0.9498	0.9492	99952	Rural	0.9495
52640	Washburn County, Wisconsin	52	Rural	0.9498	0.9492	99952	Rural	0.9495
52650	Washington County, Wisconsin	5080	Urban	1.0076	1.0076	33340	Urban	1.0076
52660	Waukesha County, Wisconsin	5080	Urban	1.0076	1.0076	33340	Urban	1.0076
52670	Waupaca County, Wisconsin	52	Rural	0.9498	0.9492	99952	Rural	0.9495
52680	Waushara County, Wisconsin	52	Rural	0.9498	0.9492	99952	Rural	0.9495
52690	Winnebago County, Wisconsin	0460	Urban	0.9115	0.9099	36780	Urban	0.9107
52700	Wood County, Wisconsin	52	Rural	0.9498	0.9492	99952	Rural	0.9495
53000	Albany County, Wyoming	53	Rural	0.9182	0.9182	99953	Rural	0.9182
53010	Big Horn County, Wyoming	53	Rural	0.9182	0.9182	99953	Rural	0.9182
53020	Campbell County, Wyoming	53	Rural	0.9182	0.9182	99953	Rural	0.9182
53030	Carbon County, Wyoming	53	Rural	0.9182	0.9182	99953	Rural	0.9182
53040	Converse County, Wyoming	53	Rural	0.9182	0.9182	99953	Rural	0.9182
53050	Crook County, Wyoming	53	Rural	0.9182	0.9182	99953	Rural	0.9182
53060	Fremont County, Wyoming	53	Rural	0.9182	0.9182	99953	Rural	0.9182
53070	Goshen County, Wyoming	53	Rural	0.9182	0.9182	99953	Rural	0.9182
53080	Hot Springs County, Wyoming	53	Rural	0.9182	0.9182	99953	Rural	0.9182
53090	Johnson County, Wyoming	53	Rural	0.9182	0.9182	99953	Rural	0.9182
53100	Laramie County, Wyoming	1580	Urban	0.8980	0.8980	16940	Urban	0.8980
53110	Lincoln County, Wyoming	53	Rural	0.9182	0.9182	99953	Rural	0.9182
53120	Natrona County, Wyoming	1350	Urban	0.9243	0.9243	16220	Urban	0.9243
53130	Niobrara County, Wyoming	53	Rural	0.9182	0.9182	99953	Rural	0.9182
53140	Park County, Wyoming	53	Rural	0.9182	0.9182	99953	Rural	0.9182
53150	Platte County, Wyoming	53	Rural	0.9182	0.9182	99953	Rural	0.9182
53160	Sheridan County, Wyoming	53	Rural	0.9182	0.9182	99953	Rural	0.9182
53170	Sublette County, Wyoming	53	Rural	0.9182	0.9182	99953	Rural	0.9182
53180	Sweetwater County, Wyoming	53	Rural	0.9182	0.9182	99953	Rural	0.9182
53190	Teton County, Wyoming	53	Rural	0.9182	0.9182	99953	Rural	0.9182
53200	Uinta County, Wyoming	53	Rural	0.9182	0.9182	99953	Rural	0.9182
53210	Washakie County, Wyoming	53	Rural	0.9182	0.9182	99953	Rural	0.9182
53220	Weston County, Wyoming	53	Rural	0.9182	0.9182	99953	Rural	0.9182
65010	Agana County, Guam	65	Rural	0.9611	0.9611	99965	Rural	0.9611
65020	Agana Heights County, Guam	65	Rural	0.9611	0.9611	99965	Rural	0.9611
65030	Agat County, Guam	65	Rural	0.9611	0.9611	99965	Rural	0.9611
65040	Asan County, Guam	65	Rural	0.9611	0.9611	99965	Rural	0.9611
65050	Barrigada County, Guam	65	Rural	0.9611	0.9611	99965	Rural	0.9611
65060	Chalan Pago County, Guam	65	Rural	0.9611	0.9611	99965	Rural	0.9611
65070	Dededo County, Guam	65	Rural	0.9611	0.9611	99965	Rural	0.9611
65080	Inarajan County, Guam	65	Rural	0.9611	0.9611	99965	Rural	0.9611
65090	Maite County, Guam	65	Rural	0.9611	0.9611	99965	Rural	0.9611
65100	Mangilao County, Guam	65	Rural	0.9611	0.9611	99965	Rural	0.9611
65110	Merizo County, Guam	65	Rural	0.9611	0.9611	99965	Rural	0.9611
65120	Mongmong County, Guam	65	Rural	0.9611	0.9611	99965	Rural	0.9611
65130	Ordot County, Guam	65	Rural	0.9611	0.9611	99965	Rural	0.9611
65140	Piti County, Guam	65	Rural	0.9611	0.9611	99965	Rural	0.9611
65150	Santa Rita County, Guam	65	Rural	0.9611	0.9611	99965	Rural	0.9611
65160	Sinajana County, Guam	65	Rural	0.9611	0.9611	99965	Rural	0.9611
65170	Talofofo County, Guam	65	Rural	0.9611	0.9611	99965	Rural	0.9611
65180	Tamuning County, Guam	65	Rural	0.9611	0.9611	99965	Rural	0.9611
65190	Toto County, Guam	65	Rural	0.9611	0.9611	99965	Rural	0.9611
65200	Umatac County, Guam	65	Rural	0.9611	0.9611	99965	Rural	0.9611
65210	Yigo County, Guam	65	Rural	0.9611	0.9611	99965	Rural	0.9611
65220	Yona County, Guam	65	Rural	0.9611	0.9611	99965	Rural	0.9611

* Transition Wage Index is comprised of 50 percent of FY 2006 MSA-based wage index and 50 percent of FY 2006 CBSA based wage index (both based on FY 2001 hospital wage data).

TABLE 2.—FY 2006 IRF PPS HOLD HARMLESS AREAS

[For Federal Fiscal Years 2006 and 2007]

SSA state/county code	County name	MSA No.	MSA urban/rural	2006 MSA-based WI	2006 CBSA-based WI	CBSA No.	CBSA urban/rural	Transition wage index *
01030	Bibb County, Alabama	01	Rural	0.7637	0.9157	13820	Urban	0.8397
01100	Chilton County, Alabama	01	Rural	0.7637	0.9157	13820	Urban	0.8397
01300	Geneva County, Alabama	01	Rural	0.7637	0.7537	20020	Urban	0.7587
01310	Greene County, Alabama	01	Rural	0.7637	0.8336	46220	Urban	0.7987
01320	Hale County, Alabama	01	Rural	0.7637	0.8336	46220	Urban	0.7987
01330	Henry County, Alabama	01	Rural	0.7637	0.7537	20020	Urban	0.7587
01420	Lowndes County, Alabama	01	Rural	0.7637	0.8300	33860	Urban	0.7969
01630	Walker County, Alabama	01	Rural	0.7637	0.9157	13820	Urban	0.8397
02090	Fairbanks County, Alaska	02	Rural	1.1637	1.1146	21820	Urban	1.1392
02170	Matanuska County, Alaska	02	Rural	1.1637	1.2165	11260	Urban	1.1901
03120	Yavapai County, Arizona	03	Rural	0.9140	0.9892	39140	Urban	0.9516
04120	Cleveland County, Arkansas	04	Rural	0.7703	0.8673	38220	Urban	0.8188
04230	Franklin County, Arkansas	04	Rural	0.7703	0.8283	22900	Urban	0.7993
04250	Garland County, Arkansas	04	Rural	0.7703	0.9249	26300	Urban	0.8476
04260	Grant County, Arkansas	04	Rural	0.7703	0.8826	30780	Urban	0.8265
04390	Lincoln County, Arkansas	04	Rural	0.7703	0.8673	38220	Urban	0.8188
04430	Madison County, Arkansas	04	Rural	0.7703	0.8636	22220	Urban	0.8170
04520	Perry County, Arkansas	04	Rural	0.7703	0.8826	30780	Urban	0.8265
04550	Poinsett County, Arkansas	04	Rural	0.7703	0.8144	27860	Urban	0.7924
05120	Imperial County, California	05	Rural	1.0297	0.8856	20940	Urban	0.9577
05150	Kings County, California	05	Rural	1.0297	0.9296	25260	Urban	0.9797
05450	San Benito County, California	05	Rural	1.0297	1.4722	41940	Urban	1.2510
06090	Clear Creek County, Colorado	06	Rural	0.9368	1.0904	19740	Urban	1.0136
06190	Elbert County, Colorado	06	Rural	0.9368	1.0904	19740	Urban	1.0136
06230	Gilpin County, Colorado	06	Rural	0.9368	1.0904	19740	Urban	1.0136
06460	Park County, Colorado	06	Rural	0.9368	1.0904	19740	Urban	1.0136
06590	Teller County, Colorado	06	Rural	0.9368	0.9792	17820	Urban	0.9580
10010	Baker County, Florida	10	Rural	0.8721	0.9537	27260	Urban	0.9129
10200	Gilchrist County, Florida	10	Rural	0.8721	0.9459	23540	Urban	0.9090
10300	Indian River County, Florida	10	Rural	0.8721	0.9477	46940	Urban	0.9099
10320	Jefferson County, Florida	10	Rural	0.8721	0.8655	45220	Urban	0.8688
10640	Wakulla County, Florida	10	Rural	0.8721	0.8655	45220	Urban	0.8688
11020	Baker County, Georgia	11	Rural	0.8247	1.1266	10500	Urban	0.9757
11110	Brantley County, Georgia	11	Rural	0.8247	1.1933	15260	Urban	1.0090
11120	Brooks County, Georgia	11	Rural	0.8247	0.8341	46660	Urban	0.8294
11150	Burke County, Georgia	11	Rural	0.8247	0.9154	12260	Urban	0.8701
11160	Butts County, Georgia	11	Rural	0.8247	0.9971	12060	Urban	0.9109
11330	Crawford County, Georgia	11	Rural	0.8247	0.9887	31420	Urban	0.9067
11350	Dawson County, Georgia	11	Rural	0.8247	0.9971	12060	Urban	0.9109
11420	Echols County, Georgia	11	Rural	0.8247	0.8341	46660	Urban	0.8294
11460	Floyd County, Georgia	11	Rural	0.8247	0.8878	40660	Urban	0.8563
11490	Glynn County, Georgia	11	Rural	0.8247	1.1933	15260	Urban	1.0090
11550	Hall County, Georgia	11	Rural	0.8247	0.9557	23580	Urban	0.8902
11570	Haralson County, Georgia	11	Rural	0.8247	0.9971	12060	Urban	0.9109
11590	Heard County, Georgia	11	Rural	0.8247	0.9971	12060	Urban	0.9109
11611	Jasper County, Georgia	11	Rural	0.8247	0.9971	12060	Urban	0.9109
11651	Lamar County, Georgia	11	Rural	0.8247	0.9971	12060	Urban	0.9109
11652	Lanier County, Georgia	11	Rural	0.8247	0.8341	46660	Urban	0.8294
11680	Liberty County, Georgia	11	Rural	0.8247	0.7715	25980	Urban	0.7981
11691	Long County, Georgia	11	Rural	0.8247	0.7715	25980	Urban	0.7981
11700	Lowndes County, Georgia	11	Rural	0.8247	0.8341	46660	Urban	0.8294
11703	Mc Intosh County, Georgia	11	Rural	0.8247	1.1933	15260	Urban	1.0090
11730	Marion County, Georgia	11	Rural	0.8247	0.8690	17980	Urban	0.8469
11740	Meriwether County, Georgia	11	Rural	0.8247	0.9971	12060	Urban	0.9109
11760	Monroe County, Georgia	11	Rural	0.8247	0.9887	31420	Urban	0.9067
11772	Murray County, Georgia	11	Rural	0.8247	0.9558	19140	Urban	0.8903
11801	Oglethorpe County, Georgia	11	Rural	0.8247	1.0202	12020	Urban	0.9225
11821	Pike County, Georgia	11	Rural	0.8247	0.9971	12060	Urban	0.9109
11885	Terrell County, Georgia	11	Rural	0.8247	1.1266	10500	Urban	0.9757
11970	Whitfield County, Georgia	11	Rural	0.8247	0.9558	19140	Urban	0.8903
11980	Worth County, Georgia	11	Rural	0.8247	1.1266	10500	Urban	0.9757
13070	Boise County, Idaho	13	Rural	0.8826	0.9352	14260	Urban	0.9089
13090	Bonneville County, Idaho	13	Rural	0.8826	0.9059	26820	Urban	0.8943
13200	Franklin County, Idaho	13	Rural	0.8826	0.9094	30860	Urban	0.8960
13220	Gem County, Idaho	13	Rural	0.8826	0.9352	14260	Urban	0.9089
13250	Jefferson County, Idaho	13	Rural	0.8826	0.9059	26820	Urban	0.8943
13270	Kootenai County, Idaho	13	Rural	0.8826	0.9339	17660	Urban	0.9083
13340	Nez Perce County, Idaho	13	Rural	0.8826	0.9314	30300	Urban	0.9070

TABLE 2.—FY 2006 IRF PPS HOLD HARMLESS AREAS—Continued

[For Federal Fiscal Years 2006 and 2007]

SSA state/ county code	County name	MSA No.	MSA urban/ rural	2006 MSA-based WI	2006 CBSA-based WI	CBSA No.	CBSA urban/ rural	Transition wage index *
13360	Owyhee County, Idaho	13	Rural	0.8826	0.9352	14260	Urban	0.9089
13380	Power County, Idaho	13	Rural	0.8826	0.9601	38540	Urban	0.9214
14020	Bond County, Illinois	14	Rural	0.8340	0.9076	41180	Urban	0.8708
14060	Calhoun County, Illinois	14	Rural	0.8340	0.9076	41180	Urban	0.8708
14350	Ford County, Illinois	14	Rural	0.8340	0.9527	16580	Urban	0.8934
14670	Macoupin County, Illinois	14	Rural	0.8340	0.9076	41180	Urban	0.8708
14700	Marshall County, Illinois	14	Rural	0.8340	0.8886	37900	Urban	0.8613
14740	Mercer County, Illinois	14	Rural	0.8340	0.8773	19340	Urban	0.8557
14820	Piatt County, Illinois	14	Rural	0.8340	0.9527	16580	Urban	0.8934
14960	Stark County, Illinois	14	Rural	0.8340	0.8886	37900	Urban	0.8613
14982	Vermilion County, Illinois	14	Rural	0.8340	0.8392	19180	Urban	0.8366
15020	Bartholomew County, Indiana	15	Rural	0.8736	0.9388	18020	Urban	0.9062
15030	Benton County, Indiana	15	Rural	0.8736	0.9067	29140	Urban	0.8902
15060	Brown County, Indiana	15	Rural	0.8736	1.0113	26900	Urban	0.9425
15070	Carroll County, Indiana	15	Rural	0.8736	0.9067	29140	Urban	0.8902
15230	Franklin County, Indiana	15	Rural	0.8736	0.9516	17140	Urban	0.9126
15250	Gibson County, Indiana	15	Rural	0.8736	0.8372	21780	Urban	0.8554
15270	Greene County, Indiana	15	Rural	0.8736	0.8587	14020	Urban	0.8662
15360	Jasper County, Indiana	15	Rural	0.8736	0.9310	23844	Urban	0.9023
15450	La Porte County, Indiana	15	Rural	0.8736	0.9332	33140	Urban	0.9034
15550	Newton County, Indiana	15	Rural	0.8736	0.9310	23844	Urban	0.9023
15590	Owen County, Indiana	15	Rural	0.8736	0.8587	14020	Urban	0.8662
15660	Putnam County, Indiana	15	Rural	0.8736	1.0113	26900	Urban	0.9425
15760	Sullivan County, Indiana	15	Rural	0.8736	0.8517	45460	Urban	0.8627
15870	Washington County, Indiana	15	Rural	0.8736	0.9122	31140	Urban	0.8929
16050	Benton County, Iowa	16	Rural	0.8550	0.8975	16300	Urban	0.8763
16080	Bremer County, Iowa	16	Rural	0.8550	0.8633	47940	Urban	0.8592
16370	Grundy County, Iowa	16	Rural	0.8550	0.8633	47940	Urban	0.8592
16380	Guthrie County, Iowa	16	Rural	0.8550	0.9266	19780	Urban	0.8908
16420	Harrison County, Iowa	16	Rural	0.8550	0.9754	36540	Urban	0.9152
16520	Jones County, Iowa	16	Rural	0.8550	0.8975	16300	Urban	0.8763
16600	Madison County, Iowa	16	Rural	0.8550	0.9266	19780	Urban	0.8908
16640	Mills County, Iowa	16	Rural	0.8550	0.9754	36540	Urban	0.9152
16840	Story County, Iowa	16	Rural	0.8550	0.9479	11180	Urban	0.9015
16910	Washington County, Iowa	16	Rural	0.8550	0.9654	26980	Urban	0.9102
17210	Doniphan County, Kansas	17	Rural	0.8087	1.0013	41140	Urban	0.9050
17290	Franklin County, Kansas	17	Rural	0.8087	0.9629	28140	Urban	0.8858
17420	Jackson County, Kansas	17	Rural	0.8087	0.8904	45820	Urban	0.8496
17430	Jefferson County, Kansas	17	Rural	0.8087	0.8904	45820	Urban	0.8496
17530	Linn County, Kansas	17	Rural	0.8087	0.9629	28140	Urban	0.8858
17690	Osage County, Kansas	17	Rural	0.8087	0.8904	45820	Urban	0.8496
17950	Sumner County, Kansas	17	Rural	0.8087	0.9457	48620	Urban	0.8772
17980	Wabaunsee County, Kansas	17	Rural	0.8087	0.8904	45820	Urban	0.8496
18110	Bracken County, Kentucky	18	Rural	0.7844	0.9516	17140	Urban	0.8680
18291	Edmonson County, Kentucky	18	Rural	0.7844	0.8140	14540	Urban	0.7992
18450	Hancock County, Kentucky	18	Rural	0.7844	0.8434	36980	Urban	0.8139
18460	Hardin County, Kentucky	18	Rural	0.7844	0.8684	21060	Urban	0.8264
18510	Henry County, Kentucky	18	Rural	0.7844	0.9122	31140	Urban	0.8483
18610	Larue County, Kentucky	18	Rural	0.7844	0.8684	21060	Urban	0.8264
18740	Mc Lean County, Kentucky	18	Rural	0.7844	0.8434	36980	Urban	0.8139
18801	Meade County, Kentucky	18	Rural	0.7844	0.9122	31140	Urban	0.8483
18890	Nelson County, Kentucky	18	Rural	0.7844	0.9122	31140	Urban	0.8483
18978	Shelby County, Kentucky	18	Rural	0.7844	0.9122	31140	Urban	0.8483
18980	Spencer County, Kentucky	18	Rural	0.7844	0.9122	31140	Urban	0.8483
18983	Trigg County, Kentucky	18	Rural	0.7844	0.8022	17300	Urban	0.7933
18984	Trimble County, Kentucky	18	Rural	0.7844	0.9122	31140	Urban	0.8483
18986	Warren County, Kentucky	18	Rural	0.7844	0.8140	14540	Urban	0.7992
18989	Webster County, Kentucky	18	Rural	0.7844	0.8372	21780	Urban	0.8108
19110	Cameron County, Louisiana	19	Rural	0.7290	0.7935	29340	Urban	0.7613
19150	De Soto County, Louisiana	19	Rural	0.7290	0.9132	43340	Urban	0.8211
19180	East Feliciana County, Louisiana	19	Rural	0.7290	0.8319	12940	Urban	0.7805
19210	Grant County, Louisiana	19	Rural	0.7290	0.8171	10780	Urban	0.7731
19230	Iberville County, Louisiana	19	Rural	0.7290	0.8319	12940	Urban	0.7805
19380	Pointe Coupee County, Louisiana	19	Rural	0.7290	0.8319	12940	Urban	0.7805
19450	St Helena County, Louisiana	19	Rural	0.7290	0.8319	12940	Urban	0.7805
19550	Union County, Louisiana	19	Rural	0.7290	0.7903	33740	Urban	0.7597
19620	West Feliciana County, Louisiana	19	Rural	0.7290	0.8319	12940	Urban	0.7805
21190	Somerset County, Maryland	21	Rural	0.9179	0.9123	41540	Urban	0.9151

TABLE 2.—FY 2006 IRF PPS HOLD HARMLESS AREAS—Continued

[For Federal Fiscal Years 2006 and 2007]

SSA state/ county code	County name	MSA No.	MSA urban/ rural	2006 MSA-based WI	2006 CBSA-based WI	CBSA No.	CBSA urban/ rural	Transition wage index *
21220	Wicomico County, Maryland	21	Rural	0.9179	0.9123	41540	Urban	0.9151
22060	Franklin County, Massachusetts	22	Rural	1.0216	1.0176	44140	Urban	1.0196
23070	Barry County, Michigan	23	Rural	0.8740	0.9420	24340	Urban	0.9080
23130	Cass County, Michigan	23	Rural	0.8740	0.9447	43780	Urban	0.9094
23330	Ionia County, Michigan	23	Rural	0.8740	0.9420	24340	Urban	0.9080
23610	Newaygo County, Michigan	23	Rural	0.8740	0.9420	24340	Urban	0.9080
24080	Carlton County, Minnesota	24	Rural	0.9339	1.0340	20260	Urban	0.9840
24190	Dodge County, Minnesota	24	Rural	0.9339	1.1504	40340	Urban	1.0422
24780	Wabasha County, Minnesota	24	Rural	0.9339	1.1504	40340	Urban	1.0422
25140	Copiah County, Mississippi	25	Rural	0.7583	0.8291	27140	Urban	0.7937
25190	George County, Mississippi	25	Rural	0.7583	0.7974	37700	Urban	0.7779
25460	Marshall County, Mississippi	25	Rural	0.7583	0.9217	32820	Urban	0.8400
25550	Perry County, Mississippi	25	Rural	0.7583	0.7362	25620	Urban	0.7473
25630	Simpson County, Mississippi	25	Rural	0.7583	0.8291	27140	Urban	0.7937
25650	Stone County, Mississippi	25	Rural	0.7583	0.8950	25060	Urban	0.8267
25680	Tate County, Mississippi	25	Rural	0.7583	0.9217	32820	Urban	0.8400
25710	Tunica County, Mississippi	25	Rural	0.7583	0.9217	32820	Urban	0.8400
26060	Bates County, Missouri	26	Rural	0.7829	0.9629	28140	Urban	0.8729
26120	Caldwell County, Missouri	26	Rural	0.7829	0.9629	28140	Urban	0.8729
26130	Callaway County, Missouri	26	Rural	0.7829	0.8338	27620	Urban	0.8084
26250	Cole County, Missouri	26	Rural	0.7829	0.8338	27620	Urban	0.8084
26270	Crawford County, Missouri	26	Rural	0.7829	0.9076	41180	Urban	0.8453
26290	Dallas County, Missouri	26	Rural	0.7829	0.8557	44180	Urban	0.8193
26310	De Kalb County, Missouri	26	Rural	0.7829	1.0013	41140	Urban	0.8921
26440	Howard County, Missouri	26	Rural	0.7829	0.8396	17860	Urban	0.8113
26590	Mc Donald County, Missouri	26	Rural	0.7829	0.8636	22220	Urban	0.8233
26670	Moniteau County, Missouri	26	Rural	0.7829	0.8338	27620	Urban	0.8084
26750	Osage County, Missouri	26	Rural	0.7829	0.8338	27620	Urban	0.8084
26821	Polk County, Missouri	26	Rural	0.7829	0.8557	44180	Urban	0.8193
26992	Washington County, Missouri	26	Rural	0.7829	0.9076	41180	Urban	0.8453
27040	Carbon County, Montana	27	Rural	0.8701	0.8961	13740	Urban	0.8831
28250	Dixon County, Nebraska	28	Rural	0.9035	0.9070	43580	Urban	0.9053
28770	Saunders County, Nebraska	28	Rural	0.9035	0.9754	36540	Urban	0.9395
28790	Seward County, Nebraska	28	Rural	0.9035	1.0208	30700	Urban	0.9622
29120	Carson City County, Nevada	29	Rural	0.9832	1.0352	16180	Urban	1.0092
29140	Storey County, Nevada	29	Rural	0.9832	1.0456	39900	Urban	1.0144
32220	San Juan County, New Mexico	32	Rural	0.8529	0.8049	22140	Urban	0.8289
32280	Torrance County, New Mexico	32	Rural	0.8529	1.0485	10740	Urban	0.9507
33730	Tompkins County, New York	33	Rural	0.8403	0.9589	27060	Urban	0.8996
33740	Ulster County, New York	33	Rural	0.8403	0.9000	28740	Urban	0.8702
34030	Anson County, N Carolina	34	Rural	0.8500	0.9743	16740	Urban	0.9122
34390	Greene County, N Carolina	34	Rural	0.8500	0.9183	24780	Urban	0.8842
34430	Haywood County, N Carolina	34	Rural	0.8500	0.9191	11700	Urban	0.8846
34440	Henderson County, N Carolina	34	Rural	0.8500	0.9191	11700	Urban	0.8846
34460	Hoke County, N Carolina	34	Rural	0.8500	0.9363	22180	Urban	0.8932
34700	Pender County, N Carolina	34	Rural	0.8500	0.9237	48900	Urban	0.8869
34720	Person County, N Carolina	34	Rural	0.8500	1.0363	20500	Urban	0.9432
34780	Rockingham County, N Carolina	34	Rural	0.8500	0.9190	24660	Urban	0.8845
36220	Erie County, Ohio	36	Rural	0.8759	0.9017	41780	Urban	0.8888
36600	Morrow County, Ohio	36	Rural	0.8759	0.9737	18140	Urban	0.9248
36630	Ottawa County, Ohio	36	Rural	0.8759	0.9524	45780	Urban	0.9142
36690	Preble County, Ohio	36	Rural	0.8759	0.9303	19380	Urban	0.9031
36810	Union County, Ohio	36	Rural	0.8759	0.9737	18140	Urban	0.9248
37250	Grady County, Oklahoma	37	Rural	0.7537	0.8982	36420	Urban	0.8260
37390	Le Flore County, Oklahoma	37	Rural	0.7537	0.8283	22900	Urban	0.7910
37400	Lincoln County, Oklahoma	37	Rural	0.7537	0.8982	36420	Urban	0.8260
37550	Okmulgee County, Oklahoma	37	Rural	0.7537	0.8690	46140	Urban	0.8114
37580	Pawnee County, Oklahoma	37	Rural	0.7537	0.8690	46140	Urban	0.8114
38080	Deschutes County, Oregon	38	Rural	1.0049	1.0603	13460	Urban	1.0326
39070	Armstrong County, Pennsylvania	39	Rural	0.8348	0.8736	38300	Urban	0.8542
40050	Aibonito County, Puerto Rico	40	Rural	0.4047	0.4645	41980	Urban	0.4346
40080	Arroyo County, Puerto Rico	40	Rural	0.4047	0.4005	25020	Urban	0.4026
40100	Barranquitas County, Puerto Rico	40	Rural	0.4047	0.4645	41980	Urban	0.4346
40190	Ciales County, Puerto Rico	40	Rural	0.4047	0.4645	41980	Urban	0.4346
40270	Guanica County, Puerto Rico	40	Rural	0.4047	0.4493	49500	Urban	0.4270
40280	Guayama County, Puerto Rico	40	Rural	0.4047	0.4005	25020	Urban	0.4026
40350	Isabela County, Puerto Rico	40	Rural	0.4047	0.4280	10380	Urban	0.4164
40390	Lajas County, Puerto Rico	40	Rural	0.4047	0.5240	41900	Urban	0.4644

TABLE 2.—FY 2006 IRF PPS HOLD HARMLESS AREAS—Continued

[For Federal Fiscal Years 2006 and 2007]

SSA state/ county code	County name	MSA No.	MSA urban/ rural	2006 MSA-based WI	2006 CBSA-based WI	CBSA No.	CBSA urban/ rural	Transition wage index *
40400	Lares County, Puerto Rico	40	Rural	0.4047	0.4280	10380	Urban	0.4164
40470	Maunabo County, Puerto Rico	40	Rural	0.4047	0.4645	41980	Urban	0.4346
40530	Orocovis County, Puerto Rico	40	Rural	0.4047	0.4645	41980	Urban	0.4346
40540	Patillas County, Puerto Rico	40	Rural	0.4047	0.4005	25020	Urban	0.4026
40570	Quebradillas County, Puerto Rico	40	Rural	0.4047	0.4645	41980	Urban	0.4346
40580	Rincon County, Puerto Rico	40	Rural	0.4047	0.4280	10380	Urban	0.4164
40660	San Sebastian County, Puerto Rico	40	Rural	0.4047	0.4280	10380	Urban	0.4164
42080	Calhoun County, S Carolina	42	Rural	0.8640	0.9392	17900	Urban	0.9016
42150	Darlington County, S Carolina	42	Rural	0.8640	0.8833	22500	Urban	0.8737
42190	Fairfield County, S Carolina	42	Rural	0.8640	0.9392	17900	Urban	0.9016
42270	Kershaw County, S Carolina	42	Rural	0.8640	0.9392	17900	Urban	0.9016
42290	Laurens County, S Carolina	42	Rural	0.8640	0.9557	24860	Urban	0.9099
42400	Saluda County, S Carolina	42	Rural	0.8640	0.9392	17900	Urban	0.9016
43430	Mc Cook County, S Dakota	43	Rural	0.8393	0.9441	43620	Urban	0.8917
43460	Meade County, S Dakota	43	Rural	0.8393	0.8912	39660	Urban	0.8653
43620	Turner County, S Dakota	43	Rural	0.8393	0.9441	43620	Urban	0.8917
43630	Union County, S Dakota	43	Rural	0.8393	0.9070	43580	Urban	0.8732
44050	Bradley County, Tennessee	44	Rural	0.7876	0.7844	17420	Urban	0.7860
44070	Cannon County, Tennessee	44	Rural	0.7876	1.0086	34980	Urban	0.8981
44280	Grainger County, Tennessee	44	Rural	0.7876	0.7790	34100	Urban	0.7833
44310	Hamblen County, Tennessee	44	Rural	0.7876	0.7790	34100	Urban	0.7833
44400	Hickman County, Tennessee	44	Rural	0.7876	1.0086	34980	Urban	0.8981
44440	Jefferson County, Tennessee	44	Rural	0.7876	0.7790	34100	Urban	0.7833
44550	Macon County, Tennessee	44	Rural	0.7876	1.0086	34980	Urban	0.8981
44690	Polk County, Tennessee	44	Rural	0.7876	0.7844	17420	Urban	0.7860
44760	Sequatchie County, Tennessee	44	Rural	0.7876	0.9207	16860	Urban	0.8542
44790	Smith County, Tennessee	44	Rural	0.7876	1.0086	34980	Urban	0.8981
44800	Stewart County, Tennessee	44	Rural	0.7876	0.8022	17300	Urban	0.7949
44840	Trousdale County, Tennessee	44	Rural	0.7876	1.0086	34980	Urban	0.8981
45030	Aransas County, Texas	45	Rural	0.7910	0.8647	18580	Urban	0.8279
45050	Armstrong County, Texas	45	Rural	0.7910	0.9178	11100	Urban	0.8544
45060	Atascosa County, Texas	45	Rural	0.7910	0.9003	41700	Urban	0.8457
45070	Austin County, Texas	45	Rural	0.7910	0.9973	26420	Urban	0.8942
45090	Bandera County, Texas	45	Rural	0.7910	0.9003	41700	Urban	0.8457
45221	Burleson County, Texas	45	Rural	0.7910	0.9243	17780	Urban	0.8577
45224	Calhoun County, Texas	45	Rural	0.7910	0.8470	47020	Urban	0.8190
45230	Callahan County, Texas	45	Rural	0.7910	0.7850	10180	Urban	0.7880
45251	Carson County, Texas	45	Rural	0.7910	0.9178	11100	Urban	0.8544
45291	Clay County, Texas	45	Rural	0.7910	0.8332	48660	Urban	0.8121
45362	Crosby County, Texas	45	Rural	0.7910	0.8777	31180	Urban	0.8344
45400	Delta County, Texas	45	Rural	0.7910	1.0074	19124	Urban	0.8992
45561	Goliad County, Texas	45	Rural	0.7910	0.8470	47020	Urban	0.8190
45672	Irion County, Texas	45	Rural	0.7910	0.8167	41660	Urban	0.8039
45721	Jones County, Texas	45	Rural	0.7910	0.7850	10180	Urban	0.7880
45731	Kendall County, Texas	45	Rural	0.7910	0.9003	41700	Urban	0.8457
45752	Lampasas County, Texas	45	Rural	0.7910	0.9242	28660	Urban	0.8576
45792	Medina County, Texas	45	Rural	0.7910	0.9003	41700	Urban	0.8457
45878	Robertson County, Texas	45	Rural	0.7910	0.9243	17780	Urban	0.8577
45881	Rusk County, Texas	45	Rural	0.7910	0.8801	30980	Urban	0.8356
45884	San Jacinto County, Texas	45	Rural	0.7910	0.9973	26420	Urban	0.8942
45973	Wise County, Texas	45	Rural	0.7910	0.9472	23104	Urban	0.8691
46020	Cache County, Utah	46	Rural	0.8843	0.9094	30860	Urban	0.8969
46110	Juab County, Utah	46	Rural	0.8843	0.9588	39340	Urban	0.9216
46140	Morgan County, Utah	46	Rural	0.8843	0.9216	36260	Urban	0.9030
46210	Summit County, Utah	46	Rural	0.8843	0.9561	41620	Urban	0.9202
46220	Tooele County, Utah	46	Rural	0.8843	0.9561	41620	Urban	0.9202
46260	Washington County, Utah	46	Rural	0.8843	0.9458	41100	Urban	0.9151
49030	Amelia County, Virginia	49	Rural	0.8479	0.9397	40060	Urban	0.8938
49050	Appomattox County, Virginia	49	Rural	0.8479	0.9017	31340	Urban	0.8748
49160	Caroline County, Virginia	49	Rural	0.8479	0.9397	40060	Urban	0.8938
49220	Craig County, Virginia	49	Rural	0.8479	0.8415	40220	Urban	0.8447
49240	Cumberland County, Virginia	49	Rural	0.8479	0.9397	40060	Urban	0.8938
49330	Franklin County, Virginia	49	Rural	0.8479	0.8415	40220	Urban	0.8447
49340	Frederick County, Virginia	49	Rural	0.8479	1.0496	49020	Urban	0.9488
49350	Giles County, Virginia	49	Rural	0.8479	0.7951	13980	Urban	0.8215
49421	Harrisonburg City County, Virginia	49	Rural	0.8479	0.9275	25500	Urban	0.8877
49480	King And Queen County, Virginia	49	Rural	0.8479	0.9397	40060	Urban	0.8938
49500	King William County, Virginia	49	Rural	0.8479	0.9397	40060	Urban	0.8938

TABLE 2.—FY 2006 IRF PPS HOLD HARMLESS AREAS—Continued

[For Federal Fiscal Years 2006 and 2007]

SSA state/ county code	County name	MSA No.	MSA urban/ rural	2006 MSA-based WI	2006 CBSA-based WI	CBSA No.	CBSA urban/ rural	Transition wage index *
49540	Louisa County, Virginia	49	Rural	0.8479	0.9397	40060	Urban	0.8938
49600	Montgomery County, Virginia	49	Rural	0.8479	0.7951	13980	Urban	0.8215
49620	Nelson County, Virginia	49	Rural	0.8479	1.0294	16820	Urban	0.9387
49770	Pulaski County, Virginia	49	Rural	0.8479	0.7951	13980	Urban	0.8215
49771	Radford City County, Virginia	49	Rural	0.8479	0.7951	13980	Urban	0.8215
49820	Rockingham County, Virginia	49	Rural	0.8479	0.9275	25500	Urban	0.8877
49900	Surry County, Virginia	49	Rural	0.8479	0.8894	47260	Urban	0.8687
49910	Sussex County, Virginia	49	Rural	0.8479	0.9397	40060	Urban	0.8938
49962	Winchester City County, Virginia	49	Rural	0.8479	1.0496	49020	Urban	0.9488
50010	Asotin County, Washington	50	Rural	1.0072	0.9314	30300	Urban	0.9693
50030	Chelan County, Washington	50	Rural	1.0072	0.9427	48300	Urban	0.9750
50070	Cowlitz County, Washington	50	Rural	1.0072	1.0224	31020	Urban	1.0148
50080	Douglas County, Washington	50	Rural	1.0072	0.9427	48300	Urban	0.9750
50280	Skagit County, Washington	50	Rural	1.0072	1.0576	34580	Urban	1.0324
50290	Skamania County, Washington	50	Rural	1.0072	1.1403	38900	Urban	1.0738
51020	Boone County, W Virginia	51	Rural	0.8083	0.8876	16620	Urban	0.8480
51070	Clay County, W Virginia	51	Rural	0.8083	0.8876	16620	Urban	0.8480
51130	Hampshire County, W Virginia	51	Rural	0.8083	1.0496	49020	Urban	0.9290
51210	Lincoln County, W Virginia	51	Rural	0.8083	0.8876	16620	Urban	0.8480
51300	Monongalia County, W Virginia	51	Rural	0.8083	0.8730	34060	Urban	0.8407
51320	Morgan County, W Virginia	51	Rural	0.8083	0.9715	25180	Urban	0.8899
51360	Pleasants County, W Virginia	51	Rural	0.8083	0.8288	37620	Urban	0.8186
51380	Preston County, W Virginia	51	Rural	0.8083	0.8730	34060	Urban	0.8407
51520	Wirt County, W Virginia	51	Rural	0.8083	0.8288	37620	Urban	0.8186
52100	Columbia County, Wisconsin	52	Rural	0.9498	1.0306	31540	Urban	0.9902
52190	Fond Du Lac County, Wisconsin	52	Rural	0.9498	0.9897	22540	Urban	0.9698
52240	Iowa County, Wisconsin	52	Rural	0.9498	1.0306	31540	Urban	0.9902
52300	Kewaunee County, Wisconsin	52	Rural	0.9498	0.9590	24580	Urban	0.9544
52410	Oconto County, Wisconsin	52	Rural	0.9498	0.9590	24580	Urban	0.9544

* Transition Wage Index is comprised of 50 percent of FY 2006 MSA-based wage index and 50 percent of FY 2006 CBSA based wage index (both based on FY 2001 hospital wage data).

[FR Doc. 05–15419 Filed 8–1–05; 4:16 pm]

BILLING CODE 4120–03–U

Federal Register

Monday,
August 15, 2005

Part III

Department of Transportation

Federal Motor Carrier Safety Administration

49 CFR Parts 390, 392, and 393

Parts and Accessories Necessary for Safe Operation; General Amendments; Final Rule

DEPARTMENT OF TRANSPORTATION

Federal Motor Carrier Safety Administration

49 CFR Parts 390, 392 and 393

[Docket No. FMCSA–1997–2364]

RIN 2126–AA61

Parts and Accessories Necessary for Safe Operation; General Amendments

AGENCY: Federal Motor Carrier Safety Administration (FMCSA), DOT.

ACTION: Final rule.

SUMMARY: FMCSA amends part 393 of the Federal Motor Carrier Safety Regulations (FMCSRs), Parts and Accessories Necessary for Safe Operation. The amendments are intended to remove obsolete and redundant regulations; respond to several petitions for rulemaking; provide improved definitions of vehicle types, systems, and components; resolve inconsistencies between part 393 and the National Highway Traffic Safety Administration's Federal Motor Vehicle Safety Standards (49 CFR part 571); and codify certain FMCSA regulatory guidance concerning the requirements of part 393. Generally, the amendments do not involve the establishment of new or more stringent requirements, but a clarification of existing requirements. This action is intended to make many sections more concise, easier to understand and more performance oriented.

DATES: The rule is effective September 14, 2005. The publications incorporated by reference in this final rule are approved by the Director of the Office of the Federal Register as of September 14, 2005.

FOR FURTHER INFORMATION CONTACT: Mr. Jeffrey J. Van Ness, Vehicle and Roadside Operations Division, Federal Motor Carrier Safety Administration, 202–366–0676, 400 Seventh Street, SW., Washington, DC 20590.

SUPPLEMENTARY INFORMATION:

Legal Basis for the Relemaking

This rulemaking is based on the authority of the Motor Carrier Act of 1935 and the Motor Carrier Safety Act of 1984 (49 U.S.C. 31131 *et seq.*).

The Motor Carrier Act of 1935, as amended, provides that ''[t]he Secretary of Transportation (Secretary) may prescribe requirements for: (1) Qualifications and maximum hours-of-service of employees of, and safety of operation and equipment of, a motor carrier; and (2) qualifications and maximum hours-of-service of employees of, and standards of equipment of, a private motor carrier, when needed to promote safety of operation.'' (49 U.S.C. 31502(b)).

This final rule amends the Federal Motor Carrier Safety Regulations (FMCSRs) to remove obsolete and redundant regulations; respond to several petitions for rulemaking; provide improved definitions of vehicle types, systems, and components; resolve inconsistencies between part 393 and the National Highway Traffic Safety Administration's Federal Motor Vehicle Safety Standards (49 CFR part 571); and codify certain FMCSA regulatory guidance concerning the requirements of part 393. Generally, the amendments do not involve the establishment of new or more stringent requirements, but a clarification of existing requirements. This action is intended to make many sections more concise, easier to understand and more performance oriented. The adoption and enforcement of such rules is specifically authorized by the Motor Carrier Act of 1935. This final rule rests squarely on that authority.

The Motor Carrier Safety Act of 1984 provides concurrent authority to regulate drivers, motor carriers, and vehicle equipment. It requires the Secretary to ''prescribe regulations on commercial motor vehicle safety.'' The regulations shall prescribe minimum safety standards for commercial motor vehicles. At a minimum, the regulations shall ensure that: (1) Commercial motor vehicles are maintained, equipped, loaded, and operated safely; (2) the responsibilities imposed on operators of commercial motor vehicles do not impair their ability to operate the vehicles safely; (3) the physical condition of operators of commercial motor vehicles is adequate to enable them to operate vehicles safely; and (4) the operation of commercial motor vehicles does not have a deleterious effect on the physical condition of the operators' (49 U.S.C. 31136(a)).

This final rule concerns parts and accessories necessary for the safe operation of commercial motor vehicles. It is based primarily on section 31136(a)(1) and (2), and secondarily on section 31136(a)(4). This rulemaking would ensure CMVs are maintained, equipped, loaded, and operated safely by requiring certain vehicle components, systems and equipment to meet minimum standards such that the mechanical condition of the vehicle is not likely to cause a crash or breakdown.

The final rule provides improved guidance concerning parts and accessories to CMV drivers who are responsible for ensuring vehicles are in safe and proper operating condition before each trip, and reporting to their employers any defects or deficiencies observed by, or reported to, the driver during the work day. By ensuring commercial motor vehicles are in safe and proper working order, it is less likely that the mechanical condition of the vehicle would cause a crash or breakdown. Therefore, drivers' responsibilities for the operation of their commercial motor vehicles do not, if fulfilled in accordance with the regulations, impair their ability to operate vehicles safely.

Finally, the rulemaking would ensure the operation of CMVs does not have a deleterious effect on the physical condition of the operators of vehicles by requiring vehicle components and systems meet specific performance requirements. Compliance with these requirements would help to ensure that the mechanical condition of the vehicle is not likely to cause a crash or breakdown.

Therefore, FMCSA considers the requirements of 49 U.S.C. 31136 (a)(1), (2) and (4) to be applicable to this rulemaking action. The rulemaking would amend regulations concerning commercial vehicle equipment, prescribe regulations applicable to the responsibilities frequently imposed upon drivers to ensure their ability to operate safely is not impaired, and help to prevent serious injuries to CMV drivers that could result from improperly secured loads.

With regard to 49 U.S.C. 31136(a)(3), FMCSA does not believe this provision concerning the physical condition of drivers is applicable to this rulemaking because this rulemaking does not concern the establishment of driver qualifications standards. This final rule addresses safety requirements applicable to commercial motor vehicle parts and accessories necessary for safe operation and does not include issues related to the physical qualifications or physical capabilities of drivers who must operate such vehicles.

However, before prescribing any such regulations, FMCSA must consider the ''costs and benefits'' of any proposal (49 U.S.C. 31136(c)(2)(A)).

This final rule requires commercial motor vehicles to be maintained, equipped and operated safely. It removes obsolete and redundant regulations; responds to several petitions for rulemaking; provides improved definitions of vehicle types, systems, and components; resolves inconsistencies between part 393 and the National Highway Traffic Safety Administration's Federal Motor Vehicle

Safety Standards (49 CFR part 571); and codifies certain FMCSA regulatory guidance concerning the requirements of part 393. The fundamental purpose of 49 CFR part 393 Parts and Accessories Necessary for Safe Operation is to ensure that no employer shall operate a commercial motor vehicle or cause or permit it to be operated, unless it is equipped in accordance with the requirements and specifications of this part. However, nothing contained in part 393 shall be construed to prohibit the use of additional equipment and accessories, not inconsistent with or prohibited by part 393, provided such equipment and accessories do not decrease the safety of operation of the motor vehicles on which they are used. Compliance with the rules concerning parts and accessories is necessary to ensure vehicles are equipped with the specified safety devices and equipment.

Background

On April 7, 1997, the Federal Highway Administration (FHWA) published a notice of proposed rulemaking (NPRM) to amend part 393 (62 FR 18170). FHWA received numerous petitions for rulemaking and requests for interpretation of the requirements of part 393 which raised the need for amendments to clarify several provisions of the safety regulations. In addition, the National Highway Traffic Safety Administration (NHTSA), the Federal agency responsible for establishing safety standards for the manufacture of motor vehicles and certain motor vehicle equipment, made several amendments to its Federal Motor Vehicle Safety Standards (FMVSSs) that necessitate amendments to the FMCSRs in order to eliminate inconsistencies between part 393 and the FMVSSs. Comments were requested by June 13, 1997.

Extension of Comment Period

On June 12, 1997, FHWA published a notice in the **Federal Register** to extend the comment period until July 28, 1997 (69 FR 32066). The extension was in response to a request from the Motor Equipment Manufacturers Association (MEMA) (62 FR 32066). MEMA requested the extension in order to develop what it described as ''meaningful and responsive comments'' to the proposed revisions of § 393.25, *Requirements for lamps other than head lamps,* § 393.45, *Brake tubing and hose adequacy,* and § 393.46, *Brake tubing and hose connections.* A copy of the MEMA request is included in the docket.

Publication of Final Rule on § 393.60, Glazing in Specified Openings

On January 9, 1998, FHWA revised its requirements concerning glazing materials, windshield condition, coloring and tinting of windshields and windows, and obstruction to the driver's field of view for commercial motor vehicles operated in interstate commerce (63 FR 1383). The revision was intended to remove obsolete regulatory language, establish requirements that were more performance-based than the previous rules, and respond to requests for waivers to allow the use of windshield-mounted transponders. The agency had proposed revising § 393.60 as part of the April 14, 1997, NPRM. Upon review of the docket comments and requests for waivers, the agency decided to issue a final rule on glazing materials, windshields and windows and to publish, at a later date, a final rule on the remaining issues covered in the NPRM.

Public Meeting About the Proposed Changes to the Brake Hose Regulations

On March 24, 1998, FHWA held a public meeting to discuss requirements for brake hoses used on commercial motor vehicles. An announcement of the meeting was published in the **Federal Register** on February 20, 1998 (63 FR 8606). Several brake hose manufacturers submitted comments in response to the 1997 notice of proposed rulemaking expressing opposition to the proposed changes to §§ 393.45 and 393.46. They believe the proposed removal of references to the Society of Automotive Engineers' (SAE) standards would have an adverse impact on safety. Some of the brake hose manufacturers contacted members of Congress to voice their concerns. As a result, the agency received numerous calls from congressional staff and letters from members of the House and Senate.

At the request of congressional staff, FHWA met with representatives from several congressional offices on October 24, 1997, to explain the proposed rulemaking and the roles of the FHWA and the NHTSA. During this meeting FHWA offered to hold a public meeting concerning brake hoses. The meeting was intended to initiate dialogue between FHWA, NHTSA, manufacturers of brake hoses, brake hose assemblies, and brake hose end fittings for use on commercial motor vehicles, and interested parties concerning the adequacy of Federal requirements for brake hoses and related components. Copies of presentations made by the participants are included in the docket.

On October 30, 1998, three brake manufacturers, Elf Atochem North America, Inc., Mark IV Industrial/Dayco Eastman, and Parker Hannifin Corporation [1] filed a joint petition for rulemaking with NHTSA. The petitioners requested that certain requirements relating to brake hoses, brake hose tubing, and brake hose end fittings that are administered by FHWA be incorporated into FMVSS No. 106 (49 CFR 571.106). Specifically, the petitioners requested incorporation of the requirements of 49 CFR 393.45 (Brake tubing and hose, adequacy) and 49 CFR 393.46 (Brake tubing and hose connections) into FMVSS No. 106. On May 15, 2003, NHTSA published an NPRM proposing amendments to FMVSS No. 106 (68 FR 26384). On December 20, 2004 NHTSA published its final rule amending FMVSS No. 106 (69 FR 76298).

In consideration of NHTSA's revision of FMVSS No. 106, FMCSA believes the issues raised by commenters responding to the proposed revisions to 49 CFR 393.45 and 393.46 have been resolved through NHTSA's rulemaking.

Discussion of Comments Received in Response to the April 14, 1997, NPRM

The agency received 36 comments in response to the NPRM. The commenters were: Air Ride Control, Inc.; Amerex Corporation; the American Trucking Associations (ATA) (two submissions to the docket); Burns Consulting Associates; Colorado Department of Public Safety; Commercial Vehicle Safety Alliance (CVSA) (two submissions to the docket); Robert J. Crail, a transportation engineering consultant; W. E. Currie, a consulting engineer; Dana Corporation, Boston Weatherhead Division; Electronic Controls Company; Elf Atochem North America, Inc.; Georgia Public Service Commission; Grote Industries, Inc.; Hüls America, Inc.; Lufkin Trailers; Mark IV Industrial—Dayco Eastman; The Commonwealth of Massachusetts, Department of Public Utilities; National Association of State Fire Marshals; National Association of Trailer Manufacturers; National Automobile Dealers Association; National Automobile Transporters Association; National Propane Gas Association; Oklahoma Highway Patrol; Parker Hannifin Corporation (two submissions to the docket); Rockwell International Corporation (the automotive division of

[1] Since the petition was filed with NHTSA, Mark IV Industrial/Dayco Eastman has been acquired by Parker Hannifin Corporation. Elf Atochem North America, Inc. was integrated into Atofina Chemical, Inc. The successor petitioning companies are referred to as Parker/Atofina.

Rockwell is now Meritor Automotive); Star Headlight and Lantern Company, Inc.; Transportation Safety Equipment Institute; Truck Manufacturers Association; Truck Trailer Manufacturers Association; UBE Industries (America), Inc.; Donald H. Verhoff; and, Wells Cargo, Inc.

Of the comments received, 10 focused on the issue of the agency's proposal to remove references to certain SAE brake hose standards and recommended practices. Because this issue is being addressed through a separate rulemaking by NHTSA, FMCSA will not provide a discussion of brake hose manufacturing standards.

With regard to the remaining comments, the majority of the commenters supported the proposed amendments. Several, however, suggested minor enhancements or modifications to the specific wording proposed by the agency, or changes in terminology. For example, a transportation engineering consultant suggested we use ''upper beam'' and ''lower beam'' when describing headlight terminology. Along similar lines, AMERIX Corporation, a fire extinguisher manufacturer, advised us that the type 4B:C extinguisher referenced in the proposed amendments to § 393.95 is no longer manufactured.

The National Association of State Fire Marshals (NASFM) argued that this rulemaking does nothing to address their 1995 petition to amend the FMCSRs to require fire extinguishers on all lightweight vehicles (under 10,000 pounds gross vehicle weight rating (GVWR)), operated in interstate commerce. A copy of the petition was attached. The Agency previously explained to NASFM that generally, the FMCSRs are not applicable to lightweight vehicles and that the reference to lightweight vehicles under 49 CFR 393.95 was an error. The term was supposed to have been removed when the agency incorporated the statutory definition of CMV from the Motor Carrier Act of 1984. Fire extinguishers are required on all power units subject to the FMCSRs, including vehicles designed or used to transport 9 to 15 passengers (including the driver), for direct compensation, if the vehicle is driven more than 75 air miles beyond the driver's normal work reporting location. This rulemaking was never intended to address this issue.

Amendments to 49 CFR Parts 390, 392 and 393: Section-by-Section Discussion of the Amendments

Part 390, Subpart A—General Applicability and Definitions

Section 390.5—Definition of Driveaway-Towaway Operation

Parts 393 and 396 of the FMCSRs include several exceptions for driveaway-towaway operations. Currently, a driveaway-towaway operation is defined as one in which a motor vehicle constitutes the commodity being transported and one or more set of wheels of the vehicle being transported are on the surface of the roadway during transportation. The driveaway-towaway exceptions are intended to address situations in which compliance with some of the vehicle regulations is not practicable because of the circumstances surrounding the delivery or transportation of the vehicle. Examples of driveaway-towaway operations include the delivery of a newly manufactured commercial motor vehicle from a manufacturer to a dealership, the delivery of a new or used motor vehicle from the dealership to the purchaser, or certain movements of vehicles to a repair or maintenance facility. Among the provisions of parts 393 and 396 which do not apply to driveaway-towaway operations are the requirements for lamps and reflectors, brakes, driver vehicle inspection reports, maintenance records, and periodic inspection.

The concept of providing exceptions for such operations dates back to the former Interstate Commerce Commission's (ICC) May 27, 1939, Order under Ex-Parte No. MC–2 (14 M.C.C. 669, at 679). A driveaway-towaway operation was originally defined by the ICC as ''any operation in which a single motor vehicle or combination of motor vehicles, new or used, constitutes the commodity being transported and in which the motive power of any such motor vehicles is utilized.'' In 1952, the ICC revised the definition to read ''any operation in which any motor vehicle or motor vehicles, new or used, constitute the commodity being transported, when one or more set of wheels of any such motor vehicle or motor vehicles are on the roadway during the course of transportation; whether or not any such motor vehicle furnishes the motive power.'' (17 FR 4422, 4423, May 15, 1952).

The current definition of a driveaway-towaway operation was published on May 19, 1988 (53 FR 18052). FMCSA continues to believe the definition does not provide sufficient guidance in identifying the specific types of vehicle operations covered. Therefore, FMCSA revises the definition of driveaway-towaway operation to limit the use of the various exceptions to situations in which motor vehicles are being transported: (1) Between vehicle manufacturer's facilities, (2) between a vehicle manufacturer and a dealership or a purchaser, (3) between a dealership, or other entity selling or leasing the vehicle, and a purchaser or lessee, (4) to a motor carrier's terminal or repair facility for the repair of disabling damage (as defined in § 390.5) following a crash, (5) to a motor carrier's terminal or repair facility for repairs associated with the failure of a vehicle component or system, or (6) by means of a saddle-mount or tow-bar. In addition, the driveaway-towaway exceptions are applicable only in those cases where the motor vehicles are not transporting cargo or passengers. The revision is intended to reduce confusion and it is responsive to commenters who requested that the definition include movements of vehicles between manufacturers' facilities, and the towing of vehicles after a breakdown.

Part 392, Subpart D—Use of Lighted Lamps and Reflectors

Section 392.33—Obscured Lamps or Reflector

FMCSA amends § 392.33 to include an exception for the obstruction of trailer conspicuity treatments on the front end protection device. The NHTSA requires trailer manufacturers to apply retroreflective sheeting to the front end protection devices or headerboards of trailers manufactured on or after December 1, 1993 (49 CFR 571.108, S5.7.1.4, entitled location). Because the headerboard is located at the front of flatbed trailers, the cargo may, depending upon its height, obstruct the conspicuity material located on the headerboard. FMCSA recognizes that this temporary obstruction of the reflective material cannot be avoided in many cases and does not believe that it is appropriate to penalize motor carriers if this occurs.

Part 393, Subpart A—General

Section 393.1—Scope of the Rules of This Part

FMCSA is revising § 393.1 to clarify the applicability of the requirements of part 393. Although § 390.3 explains the applicability of the FMCSRs, and § 390.5 defines the term ''commercial motor vehicle,'' many private motor carriers of property and private motor carriers of passengers do not understand

the applicability of the provisions in part 393 when a lightweight vehicle is used to tow a trailer in interstate commerce. With the exception of vehicles designed or used to transport 9 to 15 passengers (including the driver), for direct compensation, more than 75 air miles beyond the driver's normal work reporting location, and vehicles transporting certain quantities of hazardous materials, vehicles with a GVWR below 4,536 kg (10,001 pounds) or designed to transport less than 16 passengers are not subject to the FMCSRs when operated singly in interstate commerce. However, when a small vehicle is coupled to a trailer, the gross combination weight rating (GCWR) often exceeds 4,536 kg (10,001 pounds), making the combination subject to the FMCSRs.

Part 393 cross-references several Federal Motor Vehicle Safety Standards which distinguish between vehicles above and below 4,536 kg (10,001 pounds) and passenger vehicles designed to transport fewer than 16 passengers. This rulemaking includes numerous proposals to clarify the cross-references to the FMVSS so that carriers and inspectors can readily locate the applicable paragraphs within the FMVSSs. The amendment to § 393.1 is consistent with that goal.

Section 393.5—Definitions

FMCSA is amending § 393.5 by adding definitions of air brake system, air-over-hydraulic brake subsystem, auxiliary driving lamp, boat trailer, brake power assist unit, brake power unit, electric brake system, emergency brake, front fog lamp, hydraulic brake system, intermodal shipping (cargo) containers, multi-piece windshield, split service brake system, tow bar, trailer kingpin, vacuum brake system, and windshield. In addition, the definitions for chassis, clearance lamp, container chassis, heater, heavy hauler trailer, parking brake system, side marker lamps (intermediate), and side marker lamps are revised. The definition of bus is being removed from § 393.5 in favor of the definition found in § 390.5.

The definitions of brake systems and components make the brake requirements under subpart C of part 393 easier to understand and enforce.

The definitions of an air brake system and an air-over-hydraulic brake subsystem are based upon NHTSA's July 18, 1995, final rule on FMVSS No. 121 (60 FR 36741). The NHTSA amended FMVSS No. 121 to include a definition of an air-over-hydraulic brake subsystem and to make it clear that vehicles equipped with such systems are classified as air braked vehicles. In initially issuing FMVSS No. 121, NHTSA stated that ''it should be noted that the term 'air brake system' as defined in the standard applies to the brake configuration commonly referred to as 'air-over-hydraulic,' in which failure of either medium can result in complete loss of braking ability.'' (36 FR 3817, February 27, 1971). Because NHTSA has considered air-over-hydraulic brake systems subject to FMVSS No. 121 for more than 20 years, FMCSA's adoption of NHTSA's definitions are not likely to affect the applicability of the brake requirements under part 393.

The amended definition of a boat trailer is the same as that contained in 49 CFR § 571.3. The NHTSA defines boat trailer as ''a trailer designed with cradle-type mountings to transport a boat and configured to permit launching of the boat from the rear of the trailer.'' FMCSA includes this definition because § 393.11 includes requirements for lamps and reflectors on boat trailers.

FMCSA is replacing its definition of ''emergency brake system'' with NHTSA's definition for ''emergency brake.'' This change ensures consistency between FMCSA's brake regulations covering motor carriers and NHTSA's regulations covering manufacturers.

The agency is adopting NHTSA's FMVSS No. 105 definition of a split service brake system and includes it under § 393.5 to improve the clarity of the hydraulic brake system requirements under subpart C of part 393.

Definitions of an electric brake system and a vacuum brake system are added to § 393.5 to support other revisions to the brake system requirements of part 393. Because there are no FMVSSs which cover electric and vacuum brake systems, many of the brake requirements under part 393 are *de facto* manufacturing standards. To better identify the applicable requirements, however, the revisions to subpart C specifically reference electric and vacuum brakes. These definitions prevent confusion or misunderstandings on the part of motor carriers and enforcement officials.

With regard to the definition of a chassis, the agency is deleting the current reference to a ''truck or trailer'' in favor of the term ''commercial motor vehicle,'' which includes trucks, truck tractors, trailers, buses and converter dollies. This is especially necessary since the definition of a truck in § 390.5 explicitly excludes truck tractors.

The definition of a clearance lamp is being replaced with one that appeared in the Society of Automotive Engineers' definition (Glossary of Automotive Terms, SP–750, February 1988). Although the SAE publication is now out-of-print, the Agency continues to believe the SAE definition provides a better description of the location and function of the clearance lamps than the current definition in § 393.5.

As for the definition of a heater, FMCSA is amending the reference to paragraph (1) [the number ''one''] of § 177.834 with a reference to paragraph (l) [the letter ''l']. The reference to paragraph (1) [the number ''1''] was a typographical error.

A definition of a trailer kingpin is being added to cover non-driveaway-towaway operations. Currently, the definition of a saddle-mount includes a description of a ''king-pin.'' However, this definition does not appear to be appropriate for the trailer kingpin nor is the definition the same as that in the SAE's Truck & Bus Industry Glossary, SP–732, February 1988. Although the SAE publication is now out-of-print, FMCSA continues to believe the SAE's definition will ensure that definitions in part 393 are consistent with industry definitions.

To clarify the applicability of parking brake requirements, the agency is amending the definition of a parking brake system in § 393.5 to replace the term ''vehicle'' with ''motor vehicle,'' which is defined in § 390.5.

The agency is amending the definitions of ''side marker lamp (intermediate)'' and ''side marker lamp'' to include motor vehicles other than trailers. Currently, both terms are defined only in the context of trailers. However, side marker lamps are required on almost all motor vehicles and intermediate side marker lamps are required on almost all motor vehicles more than 914.4 centimeters (cm) (30 feet) in length. Therefore, FMCSA is revising the definitions to include trucks, truck-tractors, and buses and to make both definitions consistent with the requirements under § 393.11 relating to side marker lamps and FMVSS No. 108, NHTSA's requirements for lamps and reflective devices.

On November 23, 1990, NHTSA amended its definition of a heavy hauler trailer to specifically exclude container chassis trailers (55 FR 48850). To maintain consistency between the definitions used by the FMCSA and NHTSA, FMCSA is amending its definition of a heavy hauler trailer to exclude container chassis trailers as well.

Subpart B—Lighting Devices, Reflectors, and Electrical Equipment

FMCSA revises the title of subpart B to read ''Lamps, Reflective Devices, and Electrical Wiring.'' The new title is more consistent with the title of FMVSS No. 108, entitled ''Lamps, reflective devices, and associated equipment.'' The new title would reference electrical wiring instead of associated equipment because subpart B includes electrical wiring requirements for several vehicle systems in addition to the lamps required by FMVSS No. 108.

Section 393.9—Lamps Operable

FMCSA amends § 393.9 to codify regulatory guidance concerning the use of lamps which are not required by § 393.11 and FMVSS No. 108, and to address obstruction of lamps. Section 393.9 requires that lamps be capable of being operated at all times. FMCSA has issued regulatory guidance indicating that § 393.9 is only applicable to those lamps which are required by the FMCSRs. Therefore, if a motor carrier installs additional lamps which are found to be inoperable, for whatever reason, the carrier should not be considered in violation of § 393.9. FMCSA amends § 393.9 to codify this regulatory guidance.

Section 393.11—Lighting Devices and Reflectors

FMCSA revises the title of § 393.11 to read ''Lamps and reflective devices'' to maintain consistency between the title for subpart B and § 393.11. The FMCSA is also amending § 393.11 to require that commercial motor vehicles manufactured on or after December 25, 1968, meet the requirements of FMVSS No. 108 in effect at the time of manufacture, or any subsequent requirements under FMVSS No. 108. Currently, § 393.11 only requires that vehicles manufactured on or after March 7, 1989, meet the requirements of FMVSS No. 108. Vehicles manufactured prior to March 7 may meet either FMVSS No. 108 or the requirements of part 393 in effect on the date of manufacture.

Because NHTSA's FMVSS No. 108 became effective on December 25, 1968, manufacturers have been required to meet these requirements since that date. FMCSA's reference to March 7, 1989, under § 393.11 is therefore inappropriate. Vehicles manufactured between December 25, 1968, and March 7, 1989, were originally manufactured to meet FMVSS No. 108, and motor carriers who have maintained lamps and reflectors in the required locations for these older vehicles would not be affected by the revision.

In addition, FMCSA revises § 393.11 to provide better guidance on the requirements for trailers, and to correct several omissions in Table 1 of that section. The paragraph preceding Table 1 does not present a clear statement of the requirements for lamps and reflectors.

On December 10, 1992, NHTSA published a final rule requiring that trailers manufactured on or after December 1, 1993, which have an overall width of 2,032 mm (80 inches) or more and a GVWR of more than 4,536 kg (10,000 pounds), be equipped on the sides and rear with a means for making them more visible on the road (57 FR 238). Trailers manufactured exclusively for use as offices or dwellings are exempt.

NHTSA's rule allows trailer manufacturers to install either red and white retroreflective sheeting or reflex reflectors. Manufacturers of retroreflective sheeting or reflectors are required to certify compliance of their product with FMVSS No. 108 (49 CFR 571.108) whether the product is for use as original or replacement equipment.

Currently, § 393.11 requires that all lamps and reflective devices on motor vehicles placed in operation after March 7, 1989, meet the requirements of FMVSS No. 108 in effect on the date of manufacture. Therefore, trailers manufactured on or after December 1, 1993, must have reflective devices of the type and in the locations specified by FMVSS No. 108. To make certain that all motor carriers operating trailers subject to the FMCSRs are aware of their responsibility to maintain the conspicuity treatment, FMCSA is adding detailed language under § 393.11. FMCSA cross-references the specific paragraphs of FMVSS No. 108 related to the applicability of NHTSA's trailer conspicuity standards, the required locations for the conspicuity material, and the certification and marking requirements.

FMCSA notes that during NHTSA's rulemaking, the issue of requiring conspicuity material on the rear underride device generated industry concerns about the maintainability of the retroreflective sheeting in that location. As stated in the preamble to NHTSA's December 10, 1992, final rule:

> Objections were based on the potential for frequent damage that would cause trailers in use to fail inspections by [FMCSA]. NHTSA has observed that the horizontal bar of the underride device is less subject to docking impacts than the vertical bars because it is below most dock surfaces (and under a NHTSA proposal [a reference to the NHTSA's supplemental notice of rulemaking concerning rear impact guards (57 FR 252, January 3, 1992)] is even lower). Therefore, the final rule requires retroreflective material to be applied to the horizontal device, instead of the vertical ones. NHTSA believes that the original conspicuity material should have a long useful life on a large number of trailers, especially if it is applied to a recessed surface. However, NHTSA recognizes that routine damage, as a practical matter, may be unavoidable for some trailers as a consequence of their particular use. Therefore, [FMCSA] will consider the exclusion of conspicuity treatment from the rear underride device in any future rulemaking concerning trailer conspicuity requirements for vehicles subject to 49 CFR 393 Parts and Accessories Necessary for Safe Operation, and 49 CFR 396 Inspection [,Repair,] and Maintenance.

The cross-reference to NHTSA's conspicuity requirements includes a reference to the specific paragraphs within FMVSS No. 108 concerning the locations for the conspicuity treatments. This does not, however, include an exemption to the requirement that motor carriers maintain the conspicuity material on the rear underride device.

In addition to providing explicit guidance on trailer conspicuity, FMCSA amends § 393.11 to codify certain regulatory guidance concerning the use of amber stop lamps, amber tail lamps, and optical combinations which would involve the use of amber tail lamps or amber stop lamps. Motor vehicles are required to be equipped with at least two red stop lamps and two red tail lamps. However, some motor carriers have expressed an interest in using additional stop lamps and/or tail lamps that are amber in color.

Federal Motor Vehicle Safety Standard No. 108 does not allow amber as an alternate color for a tail lamp. In an August 23, 1990, interpretation to a manufacturer of lamps and reflectors, NHTSA stated that ''We have no intention of allowing amber as an alternate color for a tail lamp.'' In a December 10, 1991, interpretation to FHWA, NHTSA indicated that a combination amber turn signal and tail lamp is implicitly prohibited by FMVSS No. 108. NHTSA stated:

> When combined with an amber turn signal lamp, the intensity of an amber tail lamp might mask the turn signal operation. Because motorists are not used to seeing steady burning amber lamps on the rear of vehicles, amber taillamps could lead to momentary confusion of a driver following the trailer when the stop lamps are activated, thereby impairing the effectiveness of the stop signal. The presence of simultaneously burning amber and red taillamps could also create some confusion of a following driver approaching the trailer from around a corner to its rear. Thus we have concluded that a

combination amber turn signal and taillamp is implicitly prohibited by Standard No. 108.

FMCSA agrees that motorists are not use to seeing amber lamps used in conjunction with red lamps to signal that the vehicle is stopping and believes the FMCSRs should be amended explicitly to prohibit the use of amber tail lamps.

To ensure the prohibition does not conflict with FMVSS No. 108, FMCSA reviewed NHTSA requirements. Section S5.1.3 of FMVSS No. 108 prohibits the installation of supplementary lighting equipment that ''impairs the effectiveness of lighting equipment required by this standard.'' Although the determination of impairment is initially that of the vehicle's manufacturer in certifying that the vehicle meets all applicable FMVSSs, NHTSA may review that determination and, if clearly erroneous, inform the manufacturer of its views.

Because § 393.11 cross-references FMVSS No. 108, FMCSA's regulatory guidance on the use of amber stop lamps and tail lamps is generally contingent upon a NHTSA determination as to whether or not the lamp impairs the effectiveness of other rear lamps. While certification by the vehicle manufacturer and subsequent review by NHTSA address the vehicle manufacturer's role in the safe operation of the CMV, a less complicated approach is needed to ensure that the FMCSRs are easy to understand, use, and enforce.

Explicit guidance is provided to ensure that once a vehicle manufacturer certifies that a vehicle meets all applicable FMVSSs, the motor carrier does not modify it in a manner inconsistent with FMVSS No. 108. FMCSA is not aware of any vehicle manufacturers that use amber stop lamps or tail lamps as standard equipment. Consequently, the restriction would: (1) Discourage motor carriers from asking vehicle manufacturers to install amber tail lamps and/or stop lamps on vehicles as optional equipment, and (2) prohibit the motor carrier from installing or using such devices on its commercial motor vehicles.

With regard to omissions in Table 1 in § 393.11, FMCSA amends footnotes 4 through 10 to address inconsistencies with other sections of subpart B to part 393. In addition, the agency is correcting the listing for clearance lamps and reflex reflectors and to include metric units in describing the location of the required lamps and reflectors.

The current listing for clearance lamps omits reference to footnote 8 concerning pole trailers and does not include reference to the provision in FMVSS No. 108 (S5.1.1.9) for clearance lamps on boat trailers. Under FMVSS No. 108, a boat trailer with an overall width of 2,032 mm (80 inches) or more is not required to be equipped with both front and rear clearance lamps provided an amber (to the front) and red (to the rear) clearance lamp is located at or near the midpoint on each side to indicate the extreme width of the trailer. This provision for clearance lamps on boat trailers is covered under a new footnote 17.

The listings for reflex reflectors (front side) and side marker lamps (front) are revised to address an inconsistency between § 393.11 and FMVSS No. 108 (S5.1.1.15). Under FMVSS No. 108, a trailer that is less than 1,829 mm (6 feet) in length (including the trailer tongue) need not be equipped with front side marker lamps and front side reflex reflectors. This exception is covered under a new footnote 16.

FMCSA removes the last sentence in footnote 4, which requires that the rear side marker lamps be visible in the rearview mirror. This requirement is impractical and is inconsistent with FMVSS No. 108. Section 571.108 (S5.1.1.8) incorporates by reference the Society of Automotive Engineers recommended practice Clearance, Side Marker, and Identification Lamps, (SAE J592e, July 1972) which provides photometric standards. These standards cover visibility angles of 45 degrees left to 45 degrees right and 10 degrees up to 10 degrees down. In order for the rear side marker lamps to be visible in the rearview mirrors, the left to right angles would each have to be approximately 85 degrees. Because side marker lamps which meet the minimum standards contained in SAE J592e generally are not visible in the rearview mirror, the agency amends footnote 4.

FMCSA makes editorial changes to footnotes 5 through 8 to improve the manner in which the requirements are presented. For instance, in footnote 5, the change makes it clear that converter dollies are only required to have one stop lamp and one tail lamp. The current wording, when combined with the legend at the end of § 393.11, could be construed as requiring two stop lamps and two tail lamps.

Amendments to footnotes 9 and 10 remove the requirements that projecting loads be equipped with lamps and reflectors during daylight hours. There is no apparent safety benefit for requiring lamps and reflectors on projecting loads during times when lamps are not required to be used.

Footnote 15 is revised to incorporate language consistent with certain FMVSS No. 108 options—covered under S5.3.1.1.1, S5.3.1.4, S5.3.1.6—on the locations for clearance lamps.

Section 393.17—Lamps and Reflectors, Driveaway-Towaway Operations

FMCSA amends the wording of the diagrams which illustrate the requirements of § 393.17. The diagrams incorrectly reference §§ 393.25(e) and 393.26(d); therefore, the sections are amended to reference § 393.11, which covers the color of exterior lamps and reflective devices.

Section 393.19—Requirements for Turn Signaling Systems

FMCSA revises § 393.19 to make it more consistent with FMVSS No. 108 (S5.5.5). Paragraph S5.5.5 provides a concise standard that vehicle manufacturers must meet. To ensure consistency between FMVSS No. 108 and the FMCSRs, FMCSA adopts the NHTSA standard.

Section 393.20—Clearance Lamps to Indicate Extreme Width and Height

FMCSA removes § 393.20 because the requirements for the location and color of clearance lamps are provided in Table 1 of § 393.11. The exceptions concerning the mounting of clearance lamps currently contained in § 393.20 is included under footnote 15 to Table 1. Illustrations comparable to those provided in § 393.20 are already contained in § 393.11.

Section 393.23—Lighting Devices to be Electric

FMCSA amends § 393.23 to incorporate terminology which is more consistent with current industry standards and practices. With the exception of temporary lamps used on projecting loads, lamps are required to be powered through the electrical system of the commercial motor vehicle. The title of § 393.23 is revised to read ''Power supply for lamps'' and the reference to red liquid-burning lanterns is removed as obsolete.

Section 393.24—Requirements for Headlamps and Auxiliary Road Lighting Lamps

FMCSA amends § 393.24 to provide a more straightforward presentation of the requirements for the mounting of headlamps and auxiliary lamps, and to incorporate by reference SAE standards applicable to these lamps. Currently, § 393.24 allows auxiliary and fog lamps to be used provided they meet ''the appropriate SAE standard for such lamps.'' FMCSA incorporates by

reference SAE standards J581 Auxiliary Upper Beam Lamps, July 2004, and J583 Front Fog Lamps, August 2004, for the purpose of establishing more specific performance requirements for such lamps. While auxiliary driving lamps and fog lamps are not required to be used, performance standards are being specified to ensure that the use of such devices does not decrease safety.

A new paragraph is being added to address marking of headlamps. Paragraph S7.2 of FMVSS No. 108 requires the lens of each headlamp and beam contributor manufactured on or after December 1, 1989, to be marked. FMCSA amends the FMCSRs to include this requirement under § 393.24 to ensure that commercial motor vehicles are equipped with original or replacement headlamps which meet the requirements of FMVSS No. 108.

Paragraph (d) of § 393.24, Aiming and intensity, is being revised to reference FMVSS No. 108, and SAE standards J581 and J583. One of the SAE standards currently referenced in § 393.24(d)—Electric Headlamps for Motor Vehicles—was canceled by the SAE. The other SAE standard, J579 Sealed Beam Headlamp Units for Motor Vehicles, is not necessary given the cross-reference to FMVSS No. 108 and the incorporation by reference of SAE J581 and J583.

Section 393.25—Requirements for Lamps Other Than Headlamps

To improve the clarity with which the requirements are presented, FMCSA revises § 393.25 in its entirety. Section 393.25(a) provides a concise description of the mounting requirements for lamps. Paragraph (b), entitled ''Visibility,'' provides technically sound performance standards for all required lamps. Currently, § 393.25(b) requires lamps to be mounted such that they are capable of being seen at distances up to 152.4 meters (500 feet) under clear atmospheric conditions during the period when lamps must be used as provided by § 392.30. FMCSA determined that § 392.30 duplicated State and local regulations and removed that requirement on November 23, 1994 (59 FR 60319). Also, FMCSA believes the performance criteria for lamps are effectively addressed by § 393.11 which cross-references FMVSS No. 108. Lamps must, at a minimum, meet the requirements of FMVSS No. 108 in effect on the date of manufacture of the vehicle. FMVSS No. 108 specifies the minimum and maximum photometric output values for required lamps. Vehicles not subject to FMVSS No. 108 on the date of manufacture are required to meet the visibility requirements specified in the SAE standards for incorporation by reference under § 393.25(c).

FMCSA deletes § 393.25(d), entitled ''Certification and markings,'' to make the FMCSRs consistent with FMVSS No. 108. With the exception of headlamps and beam contributors, FMVSS No. 108 does not require lamps to be marked. Manufacturers are responsible for ensuring that their products meet the applicable requirements of FMVSS No. 108, but the lamps do not need to be marked by the manufacturer to indicate that the device meets the standards. In this case, § 393.25(d) sets in-service requirements for lamps which are more stringent than the manufacturing standards set by the NHTSA. The removal of § 393.25(d) corrects this inconsistency.

FMCSA amends § 393.25(e), entitled ''Lighting devices to be steady-burning,'' and § 393.25(f), entitled ''Stop lamp operation,'' to provide more concise statements of the requirements of each. The FMCSA is allowing exceptions for the use of amber warning lamps which meet SAE J595, Directional Flashing Optical Warning Devices for Authorized Emergency, Maintenance, and Service Vehicles, January 2005, SAE J845, Optical Warning Devices for Authorized Emergency, Maintenance, and Service Vehicles, May 1997, or SAE J1318 Gaseous Discharge Warning Lamp for Authorized Emergency, Maintenance, and Service Vehicles, May 1998. All of these SAE recommended practices are incorporated by reference. Although the notice of proposed rulemaking preceding this final rule would have prohibited the use of certain Class 1 warning devices, FMCSA no longer believes such a prohibition is necessary. Several commenters indicated amber colored Class 1 warning devices are commonly used on certain commercial motor vehicles and there has been no adverse impact on safety. Adding these devices to the list of exceptions prevents confusion about the applicability of § 393.25(e).

FMCSA revises § 393.25(f) to eliminate a regulatory inconsistency between §§ 393.25(f) and 393.49 and to simplify the wording of the requirements. Currently, § 393.25(f) states that stop lamps on a towing vehicle need not be actuated when service brakes are applied to the towed vehicle(s) only. This provision is inconsistent with § 393.49, entitled ''Single valve to operate all brakes.'' When a combination vehicle includes a trailer that is required to be equipped with brakes, the braking system must be arranged so that a single valve controls the brakes on the towing unit and the towed unit. Because the FMCSRs do not allow the towing unit to operate without service brakes, and a single valve is required to operate all the brakes on the combination, the current wording of § 393.25(f) is inconsistent with § 393.49. The revision to § 393.25(f) includes language from FMVSS No. 108, S5.5.4, concerning stop lamp operation, to ensure consistency between the FMCSRs and the FMVSSs.

Section 393.26—Requirements for Reflectors

Consistent with the amendments to § 393.25, FMCSA is revising § 393.26 in its entirety. FMCSA amends § 393.26(a) concerning the mounting of reflectors, to provide guidelines comparable to those for § 393.25(a). Paragraph (b) is revised to include a requirement that reflex reflectors on projecting loads, vehicles transported in driveaway-towaway operations, converter dollies, and pole trailers meet SAE J594—Reflex Reflectors, December 2003. The SAE recommended practice is incorporated by reference.

The current requirement for certification and marking under § 393.26(c) is being removed to make the FMCSRs consistent with FMVSS No. 108. FMVSS No. 108 does not require that reflectors be marked by the manufacturer to indicate that the device meets the standards. Paragraph (c) would then be used to incorporate American Society for Testing and Materials (ASTM) D4956–04, Standard Specification for Retroreflective Sheeting for Traffic Control, as the minimum standard for reflective tape used in lieu of reflex reflectors. Retroreflective sheeting that conforms to the ASTM standard would generally meet the requirements of FMVSS No. 108, S5.1.1.4, concerning the use of reflective tape in lieu of reflex reflectors. The performance of the reflective sheeting as installed on the vehicle must meet the visibility requirements under SAE J594, Reflex Reflectors, December 2003.

Paragraph (d) is being revised to more clearly state that reflective surfaces or materials other than those required by § 393.11 may be used in addition to, but not in lieu of, the required reflective devices.

Sections 393.27, 393.28, 393.29, 393.31, 393.32, 393.33—Regulations on Electrical Wiring

FMCSA incorporates by reference in § 393.28, SAE J1292—Automobile, Truck, Truck-Tractor, Trailer, and Motor Coach Wiring, October 1981, which covers basic aspects of performance, operating integrity, and service. Section

393.28 is being renamed ''Wiring systems.'' The guidelines contained in J1292 effectively cover the requirements currently addressed by § 393.27, Wiring specifications; § 393.28, Wiring to be protected; § 393.29, Grounds; § 393.31, Overload protective devices; § 393.32, Detachable electrical connections; and § 393.33, Wiring, installation. Among the specific topics addressed by the SAE standard are insulated cables; conductor termination; conductor splicing; conductor grouping; wire assembly construction; wire assembly installation and protection; and wiring overload protective devices. The SAE standard for incorporation provides a concise presentation of those aspects of commercial vehicle electrical systems that should be addressed by the FMCSRs. Sections 393.27, 393.29, 393.31, 393.32 and 393.33 are being removed.

The incorporation by reference removes certain design restrictive language from § 393.28(a)(5) concerning terminals or splices above the fuel tank. FHWA received petitions from the Ford Motor Company, Freightliner Corporation, and the Motor Vehicle Manufacturers Association (now the American Motor Vehicle Manufacturers Association) requesting an amendment to § 393.28(a)(5), which was adopted in the December 7, 1988, final rule (53 FR 49380). The petitions are available for review in the docket. Each of the petitions pointed out that use of the word ''terminal'' combined with ''above'' created ambiguity with respect to the proximity of electrical wiring to the fuel tanks. Electrical terminals performing various functions, from battery terminals (Ford Motor Co.) to relays and switches (Freightliner Corporation), are mounted above the fuel tanks. In some instances these switches or relays with terminals are mounted 203 mm (8 inches) or more above the fuel tank or on the frame rail (in the case of Freightliner and Daimler-Benz power units). In the case of Ford power units, the fuel tank is specifically designed for battery installation.

The notice of proposed rulemaking that preceded the final rule would have prohibited wiring from being adjacent to any part of the fuel system (52 FR 5892, February 26, 1987). The wording in the final rule was less restrictive than the proposed language and focused specifically on terminals and splices. FMCSA agrees with the petitioners, however, that § 393.28(a)(5) is still unnecessarily restrictive. FMCSA's decision to incorporate by reference criteria that effectively and safely address the issue of wiring around the fuel system of commercial motor vehicles resolves the petitioners' concerns.

FMCSA includes an exception to the incorporation by reference for jumper cable plugs and receptacles, and circuit protection requirements for trailers. Jumper plugs and receptacles need not conform to SAE J560 Primary and Auxiliary Seven Conductor Electrical Connector for Truck-Trailer Jumper Cable, which provides the minimum requirements for primary and auxiliary jumper cable plugs and receptacles for the truck-trailer and converter dolly jumper cable systems. TTMA indicated in its comments most trailers are equipped with an SAE J560 receptacle, but they may also have a modified International Standards Organization (ISO) 3731 receptacle, while others may have a 13-conductor Cole-Hersee receptacle. FMCSA agrees with TTMA and believes safety would not be compromised by allowing flexibility.

Subpart C—Brakes

Section 393.40—Required Brake Systems

FMCSA revises § 393.40 in its entirety to present more clearly the requirements contained therein. Generally, vehicles that have been maintained to continue compliance which meet the manufacturing standards applicable at the time of the vehicle is built, will not be affected by the revisions. Hydraulic braked and air braked vehicles are required to meet the requirements of FMVSS Nos. 105 and 121, respectively, in effect at the time of manufacture. The service, parking, and emergency brake requirements for vehicles which were not subject to either of the FMVSS brake regulations is provided by references to other applicable sections in subpart C and by the requirements currently found under § 393.40(b)(2) and (c).

With regard to FMVSS No. 105, FMCSA notes that between September 1, 1975, and October 12, 1976, the standard was applicable to trucks and buses. However, from October 12, 1976, to September 1, 1983, it covered only passenger cars and school buses. From 1983 to the present, the standard has applied to trucks and buses. For the purposes of § 393.40, FMCSA will use September 2, 1983, as the date for determining which hydraulic-braked vehicles must be maintained to meet certain requirements under FMVSS No. 105.

There could be some benefit in requiring vehicles manufactured between September 1975 and October 1976 to meet the requirements of FMVSS No. 105 in effect on the date of manufacture. However, the number of these older vehicles still in operation is relatively small, and the brake requirements under part 393 to which these vehicles would continue to be subject should ensure safety of operation.

Section 393.41—Parking Brake System

The December 7, 1988, final rule on part 393 was intended to make the parking brake requirements of the FMCSRs consistent with the parking brake requirements of FMVSS Nos. 105 and 121. FMCSA has since determined that additional changes are necessary. The current language only covers vehicles with air brakes manufactured on or after March 7, 1990, which are subject to FMVSS No. 121. The wording implies that all non-air braked vehicles, irrespective of the date of manufacture, and air braked motor vehicles manufactured prior to that date are not required to be equipped with parking brakes.

Prior to the 1988 amendment, § 393.41 required that every singly driven motor vehicle and every combination of motor vehicles shall at all times be equipped with a parking brake system adequate to hold the vehicle or combination on any grade on which it is operated under any condition of loading on a surface free from ice or snow. FMCSA considers the parking brake requirements in effect prior to the 1988 amendment to provide a more straightforward standard that is easier for the industry and State officials to understand.

FMCSA revises § 393.41 to state clearly that every self-propelled commercial motor vehicle (*i.e.*, trucks, truck-tractors and buses) and every combination of commercial motor vehicles must be equipped with a parking brake system adequate to hold the vehicle or combination on any grade on which it is to be parked and under any condition of loading, on a surface free from ice or snow. Commercial motor vehicles which were subject to the parking brake requirements of FMVSS Nos. 105 or 121 at the time of manufacture are required to maintain the parking brake systems to meet those standards. Motor vehicles which were not subject to either of the FMVSS parking brake requirements must meet the requirements currently found at § 393.41(b) and (c).

The revisions to § 393.41 also address a petition for rulemaking from International Transquip Industries, Incorporated (ITI) asking FMCSA to clarify the applicable requirements for air-applied, mechanically-held, parking brakes. The petition is available for review in the docket. The ITI

manufactures an air brake system which includes an air-applied, mechanically-held parking brake. The parking brake application is initiated by exhausting air off the supply line. When the control valve senses the supply line pressure drop, it ports air from either the primary or secondary reservoirs at a controlled pressure to the brake chambers resulting in an application of the brakes. The same supply line pressure signal activates a synchronizing device which engages the mechanical pistons immediately after the brakes have been applied.

Section 393.41(b) requires that the parking brake be capable of being applied at all times by either the driver's muscular effort, or by spring action, or by other energy. In the case of ''other energy,'' the accumulation of such energy must be ''isolated from any common source and used exclusively for the operation of the parking brake.'' This wording has been in effect since 1962 and could be construed as requiring a separate reservoir for air-applied, mechanically-held parking brakes. Such a requirement is inconsistent with FMVSS No. 121.

On August 9, 1979, NHTSA amended FMVSS No. 121 to allow the application of the parking brakes by means of service brake air if: (1) The application could be made when a failure exists in the service brake system, and (2) the parking brake is held in the applied position by mechanical means (44 FR 46850). Prior to this amendment, an air-applied, mechanically-held parking brake was required to be applied by a separate reservoir. The revision of § 393.41(b) includes a cross-reference to the parking brake requirements of FMVSS No. 121, thus eliminating any inconsistencies.

For air braked vehicles which were not subject to FMVSS No. 121 at the time of manufacture, § 393.41 would continue to allow the use of air-applied, mechanically-held parking brake systems applied by a separate reservoir. The motor carrier would have the option of modifying the brake system to meet FMVSS No. 121. Air-applied, mechanically-held parking brakes which are designed to operate without a separate reservoir could be used if the conditions specified in FMVSS No. 121 are met.

Section 393.42—Brakes Required on All Wheels

The agency is revising § 393.42(b)(3) to clarify the exceptions for lightweight trailers and to address brake requirements on housemoving dollies, three-axle dollies steered by a co-driver, and similar dollies and trailers used for transporting extremely large and heavy loads at low speeds.

As part of the January 27, 1987, final rule on front wheel brakes, FMCSA amended the exemption for brakes on lightweight trailers (52 FR 2801). Prior to the amendment, full trailers, semi-trailers, or pole trailers with a gross weight of less than 1,360 kg (3,000 pounds) were not required to have brakes provided the weight of the trailer did not exceed 40 percent of the weight of the towing unit. The 1987 amendment replaced the term ''gross weight'' with ''GVWR'' or gross vehicle weight rating.

While the change to GVWR has certain benefits in terms of applying the regulation to situations in which it is not convenient to weigh the trailer, the amendment did not adequately address concerns about stability and control during braking for trailers that have a GVWR greater than 1,361 kg (3,000 pounds), but an actual or gross weight less than 1,361 kg when lightly loaded. Under certain circumstances, trailers of this weight range may be overbraked resulting in wheel lockup or skidding when the trailer is lightly loaded. FMCSA believes § 393.42 should be amended to make reference to the gross weight. Trailers covered under the current reference to GVWR are covered under the revised exemption provided the vehicle is not loaded beyond the manufacturer's weight rating. Trailers with a GVWR in excess of 1,361 kg (3,000 pounds) would only be covered by the exemption on those occasions when the gross weight of the trailer is 1,361 kg (3,000 pounds) or less. The language would help to provide a performance-based criterion that is easier to understand and enforce.

Although the exemption concerning lightweight trailers never specifically addressed converter dollies, the issue of overbraking on unladen converter dollies has been the subject of several requests for interpretation of § 393.42(b). Converter dollies are generally designed to carry loads of approximately 9,072 kg (20,000 pounds) with a brake system sized for the fully loaded condition. While the GVWR is greater than 1,360 kg (3,000 pounds) the unladen weight is usually 1,360 kg or less. When towed behind another motor vehicle, the unladen converter dolly is overbraked, with the application of the service brakes causing wheel lock-up or skidding.

In 1990, NHTSA's Vehicle Research and Test Center (VRTC) conducted tests to evaluate the braking and stability of a bobtail truck tractor towing an unladen converter dolly. Both the truck tractor and the converter dolly were equipped with ABS that could be deactivated. The truck tractor was also equipped with an automatic front-axle limiting valve (ALV) and a bobtail proportioning valve (BPV) that could each be deactivated.

The tests included 97 km/hour (60 mph) straight-lane braking, 48 km/hour (30 mph) braking in a 152.4 meters (500 ft) radius curve, and 56 km/hour (35 mph) straight-lane braking. The 97 km/hour straight-line braking tests were performed on dry concrete (high coefficient of friction surface). The braking-in-a-curve tests were performed on wet Jennite (low coefficient of friction surface). The 56 km/hour straight-lane braking was performed on wet polished concrete. The tests used ''driver best effort'' for the cases in which the ABS was turned off, and full-treadle brake applications with the ABS turned on.

When the brakes on the converter dolly were not connected, stopping distances were increased by 12 to 30 percent over those for the bobtail tractor without the converter dolly. Also, the absence of braking on the converter dolly made locking the drive axles of the tractor easier which caused the combination to jackknife. The absence of braking on the dolly did, however, prevent locking the wheels and subsequent swing-out of the dolly.

When the brakes on the converter dolly were connected and the tractor did not have a BPV system, stopping distances on the two wet surfaces were 10 to 25 percent shorter than those with the bobtail tractor alone. On the dry surface the stopping distances were slightly longer with the dolly brakes operational. When the tractor was equipped with a BPV system and the dolly brakes were connected, stopping distances were longer on all of the test surfaces and in one case by as much as 60 percent.

There were no stopping distance decreases observed for the tests performed on the dry concrete when the converter dolly brakes were connected. However, the increases were significantly less than those observed when the converter dolly brakes were disconnected.

While having operable brakes on the unladen converter dolly decreased stopping distances in certain cases, two disadvantages were observed. If the tractor is equipped with a BPV, hooking up the supply (emergency) line to release the parking brakes on the dolly will deactivate the BPV and activate the ALV. This is true even if the control (service) line is not hooked up to the dolly. This practice significantly degrades braking performance,

increasing both the stopping distance and the chance of a jackknife of the combination vehicle. The other disadvantage is that the converter dolly can swing out if the wheels lock up.

Stability and control during braking is an important consideration in determining braking requirements for commercial motor vehicles. While stopping distances for a bobtail tractor towing an unladen converter dolly could be improved in some situations by requiring operable dolly brakes, they could be significantly degraded in others. When consideration is given to the possibility of the converter dolly swinging out as a result of wheel lock up, the FMCSA believes the FMCSRs should be amended to include an exception to the requirement for operable brakes on unladen converter dollies.

Although regulatory guidance published by the FMCSA on November 17, 1993 (58 FR 60734) stated that § 393.42(b)(3) is applicable to unladen converter dollies, FMCSA is creating an exception for converter dollies under § 393.48, Brakes to be operative. Converter dollies are always equipped with brakes. Nevertheless, the air lines for the service brakes are sometimes disconnected from the towing vehicle when the converter dolly is unladen. Therefore, an exception to § 393.42 (the requirement that the converter dolly be equipped with brakes) is not necessary. FMCSA is addressing the problem by amending § 393.48 to provide an exception to the requirement that the brakes be operable when the converter dolly is unladen.

FMCSA notes that with NHTSA's March 10, 1995 (60 FR 13216) final rule on antilock braking systems (ABS), the long-term need for this exception for unladen converter dollies will diminish. An ABS-equipped converter dolly will not have the stability and control problems observed with unladen converter dollies that are not equipped with ABS. Therefore, converter dollies manufactured on or after March 1, 1998, the effective date of the NHTSA requirement for ABS on converter dollies, are not covered by the exception.

On the subject of housemoving dollies and similar vehicles designed to transport extremely large and/or heavy loads, FMCSA is providing an exemption to the requirement for brakes on all wheels based on the specialized circumstances under which these motor vehicles are used on public roads. Housemoving dollies are only used on public roads when transporting houses. Semitrailers are used to transport the dollies between jobs. When the dollies are used to transport houses, the average speed is less than 32 km/hour (20 mph). Also, escort vehicles are generally used when the houses are being moved.

Similarly, specialized trailers and dollies used to transport industrial furnaces, reactors and other heavy cargo are operated at speeds less than 32 km/hour (20 mph) and have escort vehicles. FMCSA does not believe that safety is compromised by providing an exception to the requirement for brakes on all wheels, provided the brakes on the towing unit are capable of stopping the combination within 12.2 meters (40 feet) from the speed at which the vehicle is being operated or 32 km/hour (20 mph), whichever is less.

The exemption to the requirement for brakes on all wheels also covers the steering axles of three-axle dollies which are steered by a co-driver (tillerman) at the rear. These dollies are often used to transport concrete or steel beams used for bridges or other structures. The loads are often in excess of 30.5 meters (100 feet) in length. The front of the load is secured to the power unit with the rear of the load secured to the three-axle steerable dolly. A co-driver, seated in the dolly, operates the steering controls to help maneuver the combination vehicle. Although the dolly is equipped with brakes via air lines from the towing unit, the steering axle is typically overbraked making it difficult for the co-driver to steer the dolly. When the dolly is loaded, the steering axle weight rarely exceeds 3,402 kg (7,500 pounds).

FMCSA does not believe that an exemption to the requirement for steering axle brakes on these vehicles would degrade safety. The vehicles transport unusually long loads, often require special permits, and have to operate at reduced speeds. Therefore, the agency is exempting the steering axles of such vehicles from the requirement of § 393.42(a) that all wheels be equipped with brakes provided the combination of vehicles can meet the stopping distance requirements under § 393.52.

Section 393.43—Breakaway and Emergency Braking

FMCSA revises § 393.43(a) to include better guidance on the performance requirements for towing vehicle brake protection systems. An explicit requirement that the tractor protection valve or similar device operate when the air pressure on the towing vehicle is between 138 kilopascals (kPa) and 310 kPa (20 pounds per square inch (psi) and 45 psi) is added. This criterion has been used for many years during roadside inspections and its inclusion in § 393.43(a) should not create a problem for motor carriers.

FMCSA revises § 393.43(b) to codify its interpretation of the number of trailer brakes required to apply automatically upon breakaway from the towing vehicle. On November 17, 1993, the FMCSA published regulatory guidance which indicated that all brakes must be applied upon breakaway (58 FR 60734). This is consistent with the FMCSA's November 23, 1977, interpretation (42 FR 60078). Because FMVSS No. 121 does not specify the number of trailer brakes that must apply automatically, it is possible that some trailers may be able to meet those performance requirements without having all the brakes apply upon breakaway. To ensure the enforceability of the breakaway requirements and consistency between § 393.43 and the FMVSSs, FMCSA amends the regulation to specify that all brakes must apply automatically, but the requirement is not applicable to trailers with more than two axles. Trailers with more than two axles typically would not have brakes that apply automatically upon breakaway, on each axle.

Sections 393.45 and 393.46—Brake Tubing and Hose

FMCSA revises § 393.45 to address all aspects of brake tubing and hoses, including connections, and to remove § 393.46. Currently, § 393.45 requires that brake tubing and brake hose be designed and constructed in a manner that ensures proper, adequate, and continued functioning of the tubing or hose. The tubing or hose must be long and flexible enough to accommodate without damage all normal motions of the parts to which they are attached; be suitably secured against chaffing, kinking, or other mechanical damage; and be installed in a manner that ensures proper continued functioning and prevents contact with the vehicle's exhaust system. Section 393.45 cross-references FMVSS No. 106 as well as several SAE standards.

FMCSA retains most of the current language regarding the installation of the brake hoses and the cross-reference to FMVSS No. 106. The current language regarding the design, material, and construction (§§ 393.45(a) and (b)) is removed because the cross-reference to FMVSS No. 106 addresses manufacturing aspects of brake tubing and hoses.

Also, FMCSA eliminates all references to SAE standards on brake hoses, including SAE J844—Nonmetallic Air Brake System Tubing. Based upon its review of NHTSA's December 20, 2004, final rule

concerning FMVSS No. 106, FMCSA believes there is no readily apparent benefit to incorporating by reference any of the SAE standards. Because brake hose manufacturers are required to meet all applicable requirements under FMVSS No. 106, the SAE references are unnecessary.

FMCSA removes § 393.45(d) because it does not impose any specific requirements on motor carriers. As written, the paragraph serves as a suggestion or recommendation on the use of metallic and nonmetallic brake tubing. Also, given the performance-based requirements for brake hose/tubing installation being adopted through this final rule, the current language in § 393.45(d) is no longer necessary.

The changes to § 393.45 address a petition for rulemaking from Imperial Eastman, a brake tubing/hose manufacturer. The petition is available for review in the docket. Imperial Eastman believes that certain coiled nonmetallic air brake tubing which did not meet FMVSS No. 106 was introduced into the market place as a direct result of § 393.45. Imperial Eastman believes that prior to the December 7, 1988, final rule, § 393.45 was clear and that the 1988 revision has been interpreted by some as not applying the SAE J844 requirements to nonmetallic air brake tubing. FMCSA believes the cross-reference to FMVSS No. 106 makes it clear that any brake hose, irrespective of the material from which it is manufactured, that meets the requirements of FMVSS No. 106 would satisfy § 393.45.

On the subject of brake tubing and hose connections, the revised wording of § 393.45 requires that all assemblies and end fittings for air, vacuum, or hydraulic braking systems be installed so as to ensure an attachment free of leaks, constrictions or other conditions which would adversely affect the performance of the brake system. Brake tubing and hose assemblies and end fittings are required to meet all applicable requirements under FMVSS No. 106, as is currently the case. These requirements, currently covered under § 393.46, are covered under § 393.45(e). Because the language for § 393.45 includes requirements concerning installation, connections and attachments, § 393.46 is removed.

Section 393.47—Brake Lining

Section 393.47 is revised to cover brake chambers, slack adjusters, linings and pads, drums and rotors. Brake components are required to be constructed, installed, and maintained to prevent excessive fading and grabbing. The means of attachment and physical characteristics must provide for safe and reliable stopping of the commercial motor vehicle. To make the requirements of part 393 consistent with the periodic inspection requirements under appendix G to subchapter B, § 393.47 is amended to require that the service brake chambers and spring brake chambers on each end of an axle be the same size. The effective length of the slack adjuster on each end of an axle is required to be the same. In addition, minimum requirements on the thickness of linings or pads are specified.

With regard to linings and pads, the criteria differ from appendix G. Currently, appendix G does not adequately address the issue of brake lining thickness on the steering axles of certain vehicles (typically those with a GVWR between 4,536 and 14,969 kg (10,001 and 33,000 pounds)). This issue was brought to the attention of the FMCSA by the American Trucking Associations (ATA). The ATA discussed front brake lining thickness in a petition for reconsideration of the final rule on periodic inspection. The petition is available for review in the docket. In its petition, the ATA stated:

> There are two configurations of brake lining used on steering axle brakes: blocks (sometimes called pads) and strips. Block lining is installed in four segments on the two shoes of each front brake. Such lining is typically well over ¼ inch thick when new and the ¼ inch annual inspection criteria is correct for it. Strip lining, as the name implies, consists of a continuous band of lining installed in two segments, one on each shoe of an individual front brake. Certain types of strip lining are only slightly over ¼ inch thick when new. Therefore a ¼ inch annual inspection criteria is inappropriate.

The roadside inspection guidelines used by Federal and State inspectors have the following criteria to determine if the linings or pads of the steering axle of any power unit are worn to the point of creating an imminent hazard:

> Lining with a thickness less than 3/16 inch for a shoe with a continuous strip of lining or ¼ inch for a shoe with two pads for drum brakes or to wear indicator if lining is so marked, or less than ⅛ inch for air disc brakes, and 1/16 inch or less for hydraulic disc, drum and electric brakes.

FMCSA believes these guidelines should be added to § 393.47 to help motor carriers identify steering axle brake linings and pads that are excessively worn. FMCSA will consider a separate rulemaking to amend appendix G to subchapter B, concerning the periodic inspection critieria. To address non-steering axle brake lining/pads, FMCSA incorporates into § 393.47 the same criteria currently found in appendix G.

Brake actuator readjustment limits are also being specified under § 393.47. The pushrod travel for clamp and roto-chamber type actuators is required to be less than 80 percent of the rated strokes listed in SAE J1817—Long Stroke Air Brake Actuator Marking, July 2001, or 80 percent of the rated stroke marked on the brake chamber by the chamber manufacturer, or the readjustment limit marked on the brake chamber by the chamber manufacturer. The pushrod travel for Type 16 and 20 long stroke clamp type brake actuators (which are not covered under SAE J1817 but for which there are manufacturers' recommendations) is required to be less than 51 mm (2 inches), or 80 percent of the rated stroke marked on the brake chamber by the chamber manufacturer, or the readjustment limit marked on the brake chamber by the chamber manufacturer. For wedge brakes, the movement of the scribe mark on the lining could not exceed 1.6 mm (1/16 inch). With regard to brake drums and rotors, the thickness of the drums or rotors must meet the limits established by the brake drum or rotor manufacturer.

Section 393.48—Brakes To Be Operative

FMCSA revises § 393.48(a) and (b) to make the requirements easier to understand. The revisions provide a more concise presentation of the requirements.

With regard to paragraph (c), the FMCSA explicitly addresses the issue of unladen converter dollies and lift axles. Braking on unladen converter dollies is covered extensively in discussion of the changes to § 393.42. Unladen converter dollies with a gross weight of 1,361 kg (3,000 lbs) or less would not be required to have operable brakes. Brakes on lift axles would not be required to be capable of operation while the lift axle is raised. However, brakes on lift axles must be operable whenever the lift axle is lowered and the tires contact the roadway. Therefore, if an enforcement official instructs a driver to lower the lift axle to the ground during an inspection, the driver is required to demonstrate that the brakes on that axle are operable. The revision would essentially codify regulatory guidance on these issues.

In addition, the issue of housemoving dollies, three-axle steerable dollies, and similar motor vehicles used to transport extremely heavy loads is addressed to ensure consistency between the revisions to § 393.42 and § 393.48.

Section 393.50—Reservoirs Required

Section 393.50 is revised to provide a simpler and more concise presentation

of the reservoir requirements and to cross-reference FMVSS No. 121. Each air braked truck, truck-tractor, and bus manufactured on or after March 1, 1975, would at a minimum be required to meet FMVSS No. 121, S5.1.2, in effect on the date of manufacture. Trailers manufactured on or after January 1, 1975, must meet the requirements of FMVSS No. 121, S5.2.1, in effect on the date of manufacture. Air braked vehicles manufactured prior to these dates, and vacuum braked vehicles would continue to meet the requirements currently found at § 393.50.

FMCSA believes the revision is necessary to indicate clearly that a vehicle which is maintained to meet the reservoir requirements of FMVSS No. 121 in effect on the date of manufacture would meet the requirements under part 393. This is particularly important given the NHTSA's January 12, 1995, final rule on FMVSS No. 121 (60 FR 2892). NHTSA amended the reservoir requirements to facilitate the introduction of long-stroke brake chambers. For vehicles manufactured on or after February 13, 1995, the method for calculating the minimum air reservoir capacity is based on either the rated volume of the brake chambers or the volume of the brake chambers at the maximum travel of the brake pistons or push rods, whichever is less.

Section 393.51—Warning Devices and Gauges

FMCSA revises § 393.51 to provide better guidance on the applicability of the warning device requirements to older commercial motor vehicles. Hydraulic braked vehicles manufactured on or after September 1, 1975, the effective date of FMVSS No. 105, are required to meet the brake system indicator lamp requirements of FMVSS No. 571.105 (S5.3) applicable to the vehicle on the date of manufacture. Vehicles manufactured before September 1, 1975, or to which FMVSS No. 571.105 was not applicable on the date of manufacture, must have a warning signal which operates before or upon application of the brakes in the event of a hydraulic-type complete failure of a partial system. The language would retain all current requirements but add the effective date for FMVSS No. 105 and identify the specific paragraph within FMVSS No. 105 that covers warning devices.

In addition, FMCSA inserts a note into § 393.51 to address the warning device requirements for hydraulic braked trucks and buses manufactured between October 12, 1976, and September 1, 1983. During this period, FMVSS No. 105 was only applicable to passenger cars and school buses. Consequently, manufacturers of hydraulic braked trucks and buses were not required to equip those vehicles with a warning device to indicate certain types of brake failure. However, under the FMCSRs, motor carriers are responsible for having warning devices on these vehicles. Because FMVSS No. 105 was not applicable to these vehicles at the time of manufacture, the requirements of § 393.51 are not in conflict with the NHTSA standard.

FHWA received numerous requests for interpretation from motor carriers with vehicles manufactured during this period and not equipped with a warning device. Through regulatory guidance, FHWA indicated that these vehicles are required to be equipped with warning devices because § 393.51(b)(2)—which covers hydraulic braked vehicles to which FMVSS No. 105 was not applicable at the time of manufacture—was in effect prior to October 12, 1976, and has remained in effect ever since. Therefore, the agency is codifying the regulatory guidance concerning warning devices on these vehicles.

On the subject of air braked vehicles, FMCSA revises § 393.51(c) to include reference to the March 1, 1975, effective date of FMVSS No. 121 for power units. The specific paragraphs within FMVSS No. 121 which address the pressure gauge and warning signal requirements are included. Vehicles which are not required to meet the requirements of FMVSS No. 121 must be equipped with a pressure gauge, visible to a person seated in the normal driving position, which indicates the air pressure (in kilopascals (kPa) or pounds per square inch (psi)) available for braking; and, a warning signal that is audible or visible to a person in the normal driving position and provides a continuous warning to the driver whenever the air pressure in the service reservoir system is at 379 kPa (55 psi) and below, or one-half of the compressor governor cutout pressure, whichever is less.

With regard to commercial motor vehicles with hydraulic brakes applied or assisted by air or vacuum, FMCSA revises § 393.51(e) to make it applicable only to hydraulic braked vehicles which were not subject to the FMVSS No. 105 at the time of manufacture. The amendment eliminates the inconsistency between the warning device requirements of FMVSS No. 105 and § 393.51(e). Currently, § 393.51(e) requires a warning device for the hydraulic portion of the brake system as well as a warning device for the air or vacuum portion of the brake system, irrespective of the applicability of FMVSS No. 105. However, FMVSS No. 105 does not require a warning device for the air or vacuum portion of these hydraulic brake systems. FMCSA believes the § 393.51(b) cross-reference to FMVSS No. 105 provides effective requirements for warning devices on hydraulic braked vehicles subject to that standard at the time of manufacture. A requirement for an additional warning device for the air or hydraulic portion of the brake system of these vehicles is not necessary.

For air-assisted or vacuum-assisted hydraulic braked vehicles which were not subject to FMVSS No. 105, FMCSA is retaining the current requirements for a warning device for the hydraulic portion of the brake system and a warning device for the air or vacuum portion of the brake system. Section 393.51(e) would continue to require that the hydraulic portion of the vehicle meet the requirements of § 393.51(b) and that the air or vacuum portion of the brake system meet the applicable requirements of paragraphs (c) or (d). FMCSA notes that commercial motor vehicles equipped with air-over-hydraulic brake systems are classified as air-braked vehicles and, as such, are required to meet the applicable warning device and pressure gauge requirements for air braked vehicles.

Finally, FMCSA reinstates one of the exemptions removed by the December 7, 1988, final rule on part 393. The 1988 rule revised § 393.51 by removing paragraph (g), which contained two exemptions considered obsolete with the adoption of the definition of a commercial motor vehicle. The exemptions covered buses with a seating capacity of 10 persons or less (including the driver), and two-axle property-carrying vehicles that were either manufactured before July 1, 1973, or had a GVWR of 4,536 kg (10,000 pounds) or less.

From a practical standpoint, all two-axle property-carrying vehicles with a GVWR of 4,536 kg or less, and equipped with air, vacuum, or air-assisted or vacuum-assisted hydraulic brake systems were exempted irrespective of the date of manufacture. Generally, these vehicles are only subject to the FMCSRs when transporting hazardous materials in a quantity that requires placards on the vehicle or when towing another vehicle such that the gross combination weight rating exceeds 4,536 kg (10,000 pounds). Therefore, the exemption for certain two-axle property-carrying vehicles is being reinstated, but is limited to two-axle property-carrying vehicles manufactured before July 1, 1973.

Because the group of vehicles covered by the exemption represent a small

segment of the total population of vehicles that fall under the FMCSA's jurisdiction, and these vehicles have either reached, or will soon reach the end of their service life and were previously exempted, the reinstatement will not reduce safety on the highways. FMCSA is not reinstating the exemption for buses with a seating capacity of 10 persons or less because these vehicles are generally not subject to the FMCSRs.

Subpart D—Glazing and Window Construction

Sections 393.61, 393.62, 393.63, 393.92—Window Construction and Emergency Exits

Section 393.61 is being revised to cover only truck and truck tractor window construction. Window construction for buses (or emergency exits) is covered under § 393.62. The prohibitions on window obstructions currently found at § 393.62 is addressed along with the emergency exits requirements. The provisions of § 393.63 (Windows, markings) and § 393.92 (Buses, marking emergency doors) is covered under the revised rule on emergency exits. Sections 393.63 and 393.92 are removed.

In § 393.61, FMCSA removes the reference to an ellipse in determining the minimum area of a truck or truck-tractor window. The rectangular dimensions currently provided appear to be sufficient. Also, the rectangular dimensions provide the most practical and enforceable criteria.

As for emergency exits on buses, FMCSA revises its cross-references to FMVSS No. 217 so that motor carriers and enforcement officials will have better guidance on the applicability of NHTSA's amendments to buses subject to the FMCSRs. On November 2, 1992, FMVSS No. 217 was amended to require that the minimum emergency exit space on school buses be based upon the seating capacity of each bus (57 FR 49413). NHTSA's final rule took effect September 1, 1994. Further, in a separate notice, NHTSA allowed non-school buses to meet either the non-school bus requirements or the new upgraded school bus requirements (57 FR 49444, November 2, 1992). NHTSA issued the final rule on May 9, 1995 (60 FR 24562).

FMCSA reviewed the NHTSA rulemakings and determined that the FMCSRs should be amended to address the November 2, 1992, and May 9, 1995, final rules. FMCSA is allowing the upgraded school bus emergency exit requirements on buses subject to the FMCSRs so that motor carriers are afforded the same flexibility given to manufacturers under FMVSS No. 217.

Buses manufactured on or after September 1, 1994, and having a GVWR of 4,536 kg (10,000 pounds) or less must meet the emergency exit requirements of FMVSS No. 217 (S5.2.2.3) in effect on the date of manufacture. Generally, these buses would only be subject to the FMCSRs when towing a trailer. If the gross combination weight rating (GCWR) for the bus and trailer is greater than 4,536 kg, and the combination is operated in interstate commerce, the emergency exit requirements are applicable. An example is a small bus operated by a private motor carrier of passengers when towing a trailer.

For buses with a GVWR of more than 4,536 kg (10,000 pounds), FMCSA is requiring that they have emergency exits which meet the applicable emergency exit requirements of FMVSS No. 217, S5.2.2 (the non-school bus requirements) or S5.2.3 (the upgraded school bus requirements) in effect on the date of manufacture. The provision for buses with a GVWR greater than 4,536 kg incorporates NHTSA's final rules.

For buses manufactured on or after September 1, 1973, but before September 1, 1994, the FMCSA is requiring that each bus (including a school bus used in interstate commerce for non-school bus operations) with a GVWR of more than 4,536 kg (10,000 pounds) meet the requirements of FMVSS No. 217, S5.2.2, in effect on the date of manufacture. Buses with a GVWR of 4,536 kg (10,000 pounds) or less must meet the requirements of FMVSS No. 217, S5.2.2.3, in effect on the date of manufacture.

Section 393.62 is revised to include a paragraph on emergency exit identification. Each bus and each school bus used in interstate commerce for non-school bus operations, manufactured on or after September 1, 1973, must meet the applicable emergency exit identification or marking requirements of FMVSS No. 217, S5.5, in effect on the date of manufacture. Buses (including school buses used in interstate commerce for non-school bus operations) must be marked ''Emergency Exit'' or ''Emergency Door'' followed by concise operating instructions describing each motion necessary to unlatch or open the exit located within 152 mm (6 inches) of the release mechanism.

The emergency exit requirements for buses manufactured before September 1, 1973, is revised to provide requirements which are easier to understand and enforce. These buses must have either laminated safety glass or push-out windows. The regulation would more clearly state that laminated safety glass would, at a minimum, be required to meet Test No. 25, Egress, of the American National Standards Institute (ANSI), American National Standard for Safety Glazing Materials for Glazing Motor Vehicles and Motor Vehicle Equipment Operating on Land Highways-Safety Standard, ANSI/SAE Z26.1/1996 (ANSI approved August 1997). FMCSA incorporates the ANSI document by reference.

With regard to push-out windows, the requirements are revised to adopt certain provisions of FMVSS No. 217. Each push-out window is required to be releasable by operating no more than two mechanisms and allow manual release of the exit by a single occupant. For mechanisms which require rotary or straight (parallel to the undisturbed exit surface) motions to operate the exit, the amount of force required to release the exit could not exceed 89 Newtons (20 pounds). For exits which require a straight motion perpendicular to the undisturbed exit surface, the amount of force could not exceed 267 Newtons (60 pounds).

FMCSA believes the force requirements will not present a problem for motor carriers and that older buses with emergency exits which cannot meet these basic performance requirements should have the emergency exit release mechanisms replaced. This should not be construed as an attempt to require that the entire emergency exit be replaced, only release mechanisms which do not meet the criteria.

Lastly, FMCSA codifies its regulatory guidance on buses used for the transportation of prisoners. An exception to the emergency exit requirements is included for buses used exclusively for the transportation of prisoners.

Subpart E—Fuel Systems

Section 393.67—Liquid Fuel Tanks

FMCSA revises paragraph (a) to indicate that the fuel tank requirements apply not only to tanks containing or supplying fuel for the operation of commercial motor vehicles, but includes tanks needed for the operation of auxiliary equipment installed on, or used in connection with commercial motor vehicles. Section 393.65(a), the requirements for fuel systems, contains similar language so FMCSA amends the applicability statement of § 393.67 to be consistent with § 393.65.

Also, FMCSA revises § 393.67(d) and (e) to include the information currently presented in a footnote to the section.

As indicated by the footnote, the fuel tank tests specified by § 393.67 are a measure of performance only. Alternative procedures which assure that the fuel tank meets the performance criteria may be used. However, this footnote is often overlooked. Including the text of the footnote in paragraphs (d) and (e) would help to prevent further confusion.

In addition, FMCSA corrects an error in § 393.67(f)(2). Currently, each liquid fuel tank manufactured on or after July 1, 1988, must be marked with the manufacturer's name. The July 1, 1988, date is incorrect. This date precedes the publication of the December 7, 1988, final rule that established the July 1, 1988 compliance date. The last number in the year should have been a ''9'' instead of an ''8.'' FMCSA intended the date to read July 1, 1989, approximately 120 days after the March 7, 1989, effective date of the December 7, 1988, final rule on part 393.

Section 393.68—Compressed Natural Gas Fuel Containers

FMCSA creates a new section to address requirements for compressed natural gas (CNG) fuel containers. Section 393.68 cross-references the NHTSA's new requirements for CNG containers, FMVSS No. 304, Compressed Natural Gas Fuel Container Integrity (September 26, 1994, 59 FR 49010). Under FMVSS No. 304, which is applicable to all CNG containers manufactured on or after March 26, 1995, CNG fuel containers must meet a pressure cycling test which evaluates the container's durability, a burst test to measure its strength, and a fire test to ensure adequate pressure relief characteristics. The rule also specifies labeling requirements.

FMCSA has reviewed the NHTSA requirements and determined that all commercial motor vehicles manufactured on or after March 26, 1995, and equipped with CNG fuel tanks, should be required to be maintained to meet the applicable requirements of FMVSS No. 304.

Subpart F—Coupling Devices and Towing Methods

Section 393.70—Coupling Devices and Towing Methods, Except for Driveaway-Towaway Operations

Currently § 393.70(d) provides requirements for the attachment of safety devices in case of tow-bar failure. If two chains or cables are attached to the same point on the towing vehicle, or if a bridle or a single chain or cable is used, the point of attachment must be on the longitudinal centerline of the towing vehicle. A single safety device, other than a chain or cable, must also be attached to the towing vehicle at a point on its longitudinal centerline.

Western Trailers petitioned FHWA to amend § 393.70(d)(8) to allow safety devices to be attached as close as practicable to the longitudinal centerline of the towing vehicle. The petition is available for review in the docket. The petitioner argued that because the pintle hook is mounted on the longitudinal centerline of the towing vehicle, there is no practical centerline mounting position for the safety chain/cable attachment except upon or above the pintle hook itself.

In reviewing the history of the requirements for safety chains from 1941 through the present, FMCSA notes that a certain amount of flexibility had been allowed so that chains could be attached as close as ''practicable'' to the centerline. Although the current requirements, adopted on October 11, 1972 (37 FR 21439), do not appear to have created problems for other carriers, FMCSA agrees that there is a need to reexamine the requirement and eliminate any unnecessary restrictions. To that end, FMCSA believes that specifying the location for attachment point of the safety devices with such precision is unnecessarily design-restrictive.

The attachment of the safety devices to a point as close as ''practicable'' to the centerline, is needed to ensure that the combination of vehicles will maintain as much stability as possible in the event the coupling device fails. However, given the size and weight of a typical commercial motor vehicle, there is little technical justification for prohibiting attachment of the safety devices at a point within a few centimeters (or inches) off the centerline. In fact, failure of the coupling device at its centerline point of attachment to the towing vehicle might damage the anchor point of the safety chains, possibly resulting in complete separation of the trailer.

In addition, the current language of § 393.70(d)(8) may, under some circumstances, be inconsistent with § 393.70(d)(1), which prohibits the attachment of the safety device to the pintle hook or any other device on the towing vehicle to which a tow-bar is attached.

The previous provisions of § 393.70 provided a performance-based requirement while ensuring the safety of operation of the combination of vehicles. The language used, however, may have been difficult to enforce, in that ''practicability'' is a subjective term. This generally results in differences of opinion between vehicle manufacturers, motor carriers, and Federal and State enforcement officials as to what constitutes compliance. The amended rule allows the attachment point to be offset no more than a specified distance from the longitudinal centerline and provides flexibility without adversely affecting the tracking of the towed unit in the event of a pintle hook failure. FMCSA notes that the safety device is only intended to keep the combination of vehicles together if the pintle hook or other coupling device fails, and then only for a brief period until the driver brings the vehicle to a safe stop. Therefore, the change will not affect the safety of operation of the vehicles.

FMCSA is allowing safety chains or cables to be attached to the longitudinal centerline or within 152 mm (6 inches) to the right of the longitudinal centerline on the towing vehicle. This is applicable when: (1) Two chains or cables are attached to the same point on the towing vehicle; (2) a bridle or a single chain or cable is used; or (3) a single safety device is used. Given the wide variety of vehicle configurations and the condition of loading at the time of a potential tow-bar or pintle hook failure, the current design-restrictive requirement does not appear to ensure a greater degree of safety than the revision. Allowing the safety device to be no more than 152 mm (6 inches) from the longitudinal centerline should provide additional safety benefits in a few cases without changing the level of safety guaranteed by the current centerline requirement in other cases. It would also result in a requirement that is more performance-based and less design-restrictive.

Section 393.71—Coupling Devices and Towing Methods, Driveaway-Towaway Operations

Section 393.71(a) currently prohibits the use of more than one tow-bar in any combination of vehicles. Section 393.71(g)(2) indicates that coupling devices, such as those used for towing house trailers and employing ball and socket connections, shall be considered as tow-bars. However, the broad classification of ball and socket connections as tow-bars is not consistent with the definitions of the Society of Automotive Engineers. As a result, the use of more than one ball-and-socket connection in a combination of vehicles is prohibited. This situation is being clarified through this final rule.

FMCSA considers the stability and control of a combination vehicle using multiple ball-and-socket connections no better than that of a combination using multiple tow-bars. Given that the

stability and control would, at best, be comparable to a towing method which is prohibited, FMCSA is amending § 393.71(a)(2) to prohibit the use of more than one tow-bar and/or ball-and-socket coupling device in any combination. Section 393.71(g)(2) is being removed.

To improve the consistency between Section 393.70 and 393.71, the FMCSA amends § 393.71(b) by adding a new provision addressing weight distribution of towing and towed vehicles for saddle-mount combinations.

Sections 393.70(b)(3), 393.71(b)(2) and 393.71(c)(3) address the proper weight distribution and require that the coupling arrangement be such that it does not unduly interfere with the steering, braking, and maneuvering of the combination of vehicles. Section 393.70(b)(3) covers the use of fifth wheels for non-driveaway-towaway operations and §§ 393.71(b)(2) and (c)(3) cover full-mounted vehicles in driveaway-towaway operations. Section 393.71(b) does not, however, explicitly require that the arrangement of the saddle-mounted vehicles be such that it does not unduly interfere with the steering, braking and maneuvering of the combination of vehicles. The references to undue interference with steering, braking, and maneuvering in §§ 393.70 and 393.71 suggest that such requirements are generally intended for any vehicle configuration covered by these sections. Through regulatory guidance, the agency had indicated that saddle-mounted vehicles are to be arranged such that the gross weight of the vehicles is properly distributed to prevent the conditions currently covered by §§ 393.70(b)(3), 393.71(b)(2) and 393.71(c)(3). FMCSA is now codifying this guidance in § 393.71(b)(3).

FMCSA revises § 393.71(g) to remove obsolete language and provide more technically sound guidance on towing methods. Section 393.71(g)(1) currently requires the use of a tow-bar or saddle-mount connection for all vehicles towed in driveaway-towaway operations. This is inappropriate for towing semitrailers designed to be coupled to a fifth wheel. Through regulatory guidance, the agency has allowed the use of a fifth wheel. The agency codifies this guidance by revising § 393.71(g) to explicitly allow the use of a fifth wheel.

Subpart G—Miscellaneous Parts and Accessories

Section 393.75—Tires

FMCSA amends § 393.75(e) in order to make the requirements easier to understand. Section 393.75(e) prohibits the use of regrooved tires which have a load carrying capacity greater than that of 8.25–20 8 ply-rating tires, but does not specify the load range rating for these tires. According to the Tire and Rim Association's 2003 Year Book, an 8.25–20 bias ply tire has a maximum load carrying capacity of 2,232 kg (4,920 pounds) at 793 kPa (115 psi) cold inflation pressure. This maximum capacity applies to tires of load range G. Tires with the load range of E and F have maximum load carrying capacities of 1,837 kg (4,050 pounds) and 2,041 kg (4,500 pounds), respectively. FMCSA will now use 2,232 kg limit under § 393.75. The difference in load carrying capacity between a tire rated load range E and one rated load range G is 395 kg (870 pounds). In the absence of tire overloading, the difference in the amount of front axle loading between an axle equipped with load range E tires and a front axle equipped with load range G tires is 790 kg (1,740 pounds). There is no apparent safety benefit from adopting the more stringent limit of load range E for regrooved tires. Therefore, the use of a regrooved tire with a load carrying capacity equal to or greater than 2,232 kg (4,920 pounds) is a violation of § 393.75(e) if used on the front wheels of a truck or truck tractor.

FMCSA notes that a radial ply tire of the same size and load range (*i.e.*, 8.25R20) has the same load carrying capacity, but at 827 kPa (120 psi) cold inflation pressure. Because the prohibition is based on load carrying capacity, FMCSA is replacing the reference to a specific tire size with the 2,232 kg (4,920 pound) value currently listed in the Tire and Rim Association's publication.

Section 393.78 Windshield Wipers

FMCSA amends § 393.78 to cross-reference FMVSS No. 104. The NHTSA requirement has been in effect since December 1968. Because vehicle manufacturers have been required to meet the requirements since 1968, FMCSA does not believe that motor carriers who have maintained their commercial motor vehicles should have any problem complying with the new rule. As for motor vehicles manufactured before December 1968, they are required to be equipped with a power-driven windshield wiping system with at least two wiper blades, one on each side of the centerline of the windshield. Motor vehicles which depend upon vacuum to operate the windshield wipers must have the wiper system constructed and maintained such that the performance of the wipers would not be adversely affected by a change in the intake manifold pressure. The requirements for vehicles manufactured before December 1968 were originally established by the former Interstate Commerce Commision and were applicable to vehicles manufactured on and after June 30, 1953.

FMCSA removes the exemption for the towing vehicle in a driveaway-towaway operation because there is no justification for allowing a vehicle to be driven without both windshield wipers in proper working order. The change should not result in an increased economic burden on the motor carrier industry.

Section 393.79—Windshield Defrosting Device

Section 393.79 is revised to cross-reference FMVSS No. 103. Vehicles manufactured on or after December 25, 1968, are required to meet the requirements in effect on the date of manufacture. Vehicles manufactured before December 25, 1968, are required, at a minimum, to be equipped with a means for preventing the accumulation of ice, snow, frost, or condensation to obstruct the driver's view through the windshield while the vehicle is being driven.

In addition, the exemption for the towing vehicle in a driveaway-towaway operation is removed. There is no justification for allowing a vehicle to be driven without a windshield defrosting device in proper working order.

Section 393.82—Speedometer

Section 393.82 requires that every bus, truck, and truck-tractor be equipped with a speedometer indicating speed in miles per hour. Speedometers must operate with ''reasonable accuracy.'' Appendix A to subchapter B (prior to its removal from the FMCSRs on November 23, 1994 (59 FR 60319)) interpreted as ''reasonable'' an accuracy of plus or minus 8 km/hr (5 mph) at a speed of 80 km/hr (50 mph). The interpretation indicated that accuracy within these limits is sufficient for a professional driver to ascertain the true speed of the vehicle. FMCSA is including this accuracy limit in § 393.82 to make the requirement easier to understand. FMCSA is also removing the driveaway-towaway exemption to the speedometer requirements because there is no justification for allowing a vehicle to be driven without a speedometer in proper working order. The changes should not result in an increased economic burden on the motor carrier industry.

Section 393.87—Flags on Projecting Loads

Section 393.87 is being revised to make the requirements consistent with the American Association of State Highway and Transportation Officials' (AASHTO) Guide for Maximum Dimensions and Weights of Motor Vehicles and for the Operation of Nondivisible Load Oversize and Overweight Vehicles, GSW–3, 1991. The AASHTO publication provides guidance on the use of warning flags for vehicles and loads which exceed legal width or length, or which have a rear overhang in excess of the legal limit. The AASHTO guidelines call for the use of red or orange fluorescent warning flags which are at least 457 mm (18 inches) square. Because the AASHTO guide appears to cover the majority of the cases to which the current rule is applicable, and represents a consensus of State and industry practices, FMCSA is revising § 393.87 to adopt certain provisions of those guidelines.

Commercial motor vehicles transporting loads which extend beyond the sides by more than 102 mm (4 inches) or more than 1,219 mm (4 feet) beyond the rear must have the extremities of the load marked with red or orange fluorescent warning flags. Each warning flag must be at least 457 mm (18 inches) square as opposed to the current requirement of 305 mm (12 inches) square.

With regard to the number of flags and their positions, a single flag at the extreme rear is required if the projecting load is 610 mm (2 feet) wide or less. Two warning flags are required if the projecting load is wider than 610 mm. Flags are required to be positioned to indicate maximum width of loads which extend beyond the sides and/or rear of the vehicle.

Section 393.94—Vehicle Interior Noise Level

FMCSA simplifies its regulation concerning the applicability of the interior noise levels in commercial motor vehicles. Section 393.94(a) and (d) make reference to certain vehicles manufactured before October 1, 1974, and grant motor carriers until April 1, 1975, to comply with the regulation. For vehicles operated wholly within Hawaii, carriers were given until April 1, 1976, to comply. Because these deadlines have passed, FMCSA is deleting the references from § 393.94. In addition, FMCSA is updating the reference to the American National Standards Institute (ANSI) specifications for sound level meters. Currently, § 393.94 references the 1971 version of ANSI S1.4, Specification for Sound Level Meters. FMCSA incorporates by reference the 1983 version and removing the footnote to paragraph (c). Information on the availability of the ANSI document is covered under § 393.7.

Section 393.95—Emergency Equipment on All Power Units

FMCSA eliminates the reference to lightweight vehicles in paragraph (a). The term became obsolete when the agency implemented the requirements of the Motor Carrier Safety Act of 1984 (49 U.S.C. 31131 *et. seq.*) and limited the applicability of part 393 to ''commercial motor vehicles'' as defined in that statute (53 FR 18042, May 19, 1988). Sections 393.95(a)(2)(i) and (a)(2)(ii) are being amended to remove obsolete references to vehicles equipped with fire extinguishers prior to July 1, 1971, and January 1, 1973, respectively. While some of these vehicles are still in operation, it is unlikely that the motor carriers are still using fire extinguishers that are more than 30 years old.

FMCSA revises § 393.95 to remove the specifications for bidirectional warning triangles manufactured prior to January 1, 1974. Such triangles are already prohibited on any vehicle manufactured on or after January 1, 1974. Therefore, only those carriers operating commercial motor vehicles manufactured before January 1, 1974, and equipped with warning triangles manufactured before that date, are affected.

FMCSA revises the requirements on the mounting of fire extinguishers to provide more specific guidance. Fire extinguishers are required to be securely mounted to prevent sliding, rolling, or vertical movement relative to the motor vehicle. Currently, § 393.95(a)(1) states only that the extinguisher be securely mounted.

With regard to extinguishing agents, FMCSA replaces the reference to the Underwriters Laboratories' (UL) Classification of Comparative Life Hazard of Gases and Vapors. The UL study was conducted in the 1950's and is considered obsolete information. UL has recommended that the FMCSA consider referencing the Environmental Protection Agency's regulations under Subpart G of 40 CFR part 82, Protection of Stratospheric Ozone. Subpart G implements section 612 of the Clean Air Act (42 U.S.C. 7401 *et seq.*) by determining safe alternatives to ozone-depleting compounds. It is usually referred to as the ''Significant New Alternatives Policy'' (SNAP) program. The SNAP regulations take into consideration the toxicity of substitutes for ozone-depleting compounds, but they also address potential impacts on atmospheric ozone, global warming and other issues related to human exposure and the environment. FMCSA is therefore requiring that fire extinguishers comply with the toxicity provisions of the SNAP regulations. While the other issues (ozone depletion, global warming, etc.) are important, there is no practical reason to address these issues in § 393.95.

Section 393.201—Frames

In its final rule published on December 7, 1988 (53 FR 49380), FHWA prohibited cracked, loose, sagging or broken frames. However, the agency inadvertently failed to include trailer frames. FMCSA amends § 393.201 to remedy this oversight by replacing ''bus, truck and truck-tractor'' with the term ''commercial motor vehicles'' in paragraph (a).

FMCSA revises § 393.201(d) to make the regulation more practical. Paragraph (d) was intended to prohibit welding on vehicle frames constructed of certain types of steel which is weakened by the welding process. However, the current wording is overly restrictive. To address this issue, paragraph (d) is being revised to allow welding which is performed in accordance with the vehicle manufacturer's recommendations.

In addition, FMCSA removes paragraph (f). Paragraph (f) states that field repairs are allowed. There is no practical reason for retaining this provision since there was never a requirement that the motor carrier repair its vehicle only at certain locations.

Section 393.207—Suspension Systems

In response to a petition from the Truck Trailer Manufacturers Association (TTMA), FMCSA is amending § 393.207 to prohibit any device which is capable of dumping air individually from either of the two axle suspension systems on a semitrailer equipped with air-suspended ''spread'' or ''split'' tandem axles. TTMA indicated that the petition was not intended to prohibit: (1) Devices that could exhaust air from both axle systems simultaneously, or (2) lift axles on multi-axle units. The petition is available for review in the docket.

According to the TTMA, about 30,000 semitrailers are manufactured each year with split tandem axles and air suspensions. These axles are not genuine tandems, but rather two single axles spaced at least 3,048 mm (10 feet) apart, the minimum separation required by the bridge formula [23 U.S.C. 127(a)] before each of them can carry the full 9,072 kg (20,000 pounds) allowed by

Federal law. The TTMA estimates that 5,000 of these trailers are also equipped with valves to depressurize the suspension system of one of the trailer axles, and sometimes of either axle. These valves are installed to compensate for problems created by the split tandem configuration. Normal tandems experience moderate tire scrubbing in turns because the trailer pivots around a point that lies between the two axles. Tire scrubbing is more severe in split tandems because the pivot point is much farther from either axle. Dumping air pressure from the suspension system of the rear (or less often the leading) trailer axle reduces its load and allows the trailer to pivot around the other axle with less resistance and tire scrubbing. The TTMA's own tests showed that if each axle in a split tandem is loaded to 8,845 kg (19,500 pounds) and pressure in the rear axle is dumped, the resulting weight shift will make the front axle 3,175 to 5,443 kg (7,000 to 12,000 pounds) heavier than the rear.

Dump valves were originally designed to aid maneuvering at 8 km/hour (5 mph) or less, mainly at terminals or other loading points. According to the TTMA, however, many drivers now activate them at higher speeds on streets and highways to turn corners more easily and to reduce tire wear. The TTMA also believes that suspension pressure is sometimes vented accidentally because of wiring problems the moment the tractor hooks up to the trailer. In both cases, the inevitable weight shift often produces a load on the pressurized axle that exceeds the manufacturers' ratings for that axle and its wheels, tires and brakes. In addition, the loaded axle frequently exceeds the single-axle weight limit.

FMCSA continues to believe the petition has merit, and the agency is amending § 393.207 to prohibit controls of this type. Although § 393.3, which allows the use of equipment and accessories that do not decrease operational safety, could be interpreted as prohibiting the use of equipment to disable the air suspension of one axle on a two-axle trailer, addressing this issue through rulemaking is the most appropriate course of action.

FMCSA has modified the language included in the 1997 NPRM in response to comments from the ATA. ATA agreed with the proposal, but expressed concern that motor carriers need the flexibility to exhaust air from the suspension during low-speed turns. ATA believes this is necessary because there is significant resistance or tire scrubbing when drivers make low-speed turning maneuvers with a spread tandem trailer. FMCSA agrees and has revised the language to allow the exhausting of air if the controls are either located on the trailer, or the power unit and trailer combination are not capable of traveling at a speed greater than 10 miles per hour while the air is exhausted from the suspension system.

Section 393.209—Steering Wheel Systems

FMCSA amends § 393.209(b) to correct an error in the maximum steering wheel lash for 406 mm (16 inch) steering wheels and to add steering wheel lash limits for 483 mm (19 inch) and 533 mm (21 inch) diameter steering wheels. The table specifying steering wheel lash limits currently allows 114 mm (4½ inches) lash for steering wheel diameters of 406 mm (16 inches) or less if the vehicle has a power steering system. This corresponds to an angle of approximately 32 degrees which is about 2 degrees more than the steering wheel lash limits for power steering systems using larger diameter steering wheels. Because there is no apparent technical basis for having a less stringent standard for 406 mm (16 inch) diameter steering wheel systems, FMCSA is changing the steering wheel lash limit to 108 mm (4¼ inches).

FMCSA adds steering wheel lash limits for 483 mm (19 inch) and 533 mm (21 inch) diameter steering wheels because these are relatively common steering wheel sizes. The limits being adopted for these steering wheel diameters is consistent with the 14 degree and 30 degree limits currently used for manual and power steering systems respectively.

Section 393.209 is amended to include the term ball-and-socket joints. Some steering system designs include ball-and-socket joints instead of universal joints. While the basic function of the two types of joints is similar, only universal joints are covered by § 393.209(d). Defects or unsafe conditions of ball-and-socket joints are currently implicitly covered under § 396.3(a)(1). The agency believes that such important items should be explicitly covered whenever possible.

Regulatory Analyses and Notices

Executive Order 12866 (Regulatory Planning and Review) and DOT Regulatory Policies and Procedures

FMCSA has determined that this action is not a significant regulatory action within the meaning of Executive Order 12866 or within the meaning of Department of Transportation regulatory policies and procedures. This document is not required to be reviewed by the Office of Management and Budget. Because the rulemaking is focused on improving the clarity of the safety requirements in general, and improving the cross-references between the FMCSRs and FMVSSs, the final rule will not result in costs to the industry. A regulatory evaluation has been prepared by the Agency and is available in the docket.

Regulatory Flexibility Act

In compliance with the Regulatory Flexibility Act (5 U.S.C. 601–612), FMCSA has considered the effects of this regulatory action on small entities and determined that this rule will not have a significant impact on a substantial number of small entities, as defined by the U.S. Small Business Administration's Office of Size Standards. This final rule makes amendments and revisions to parts 390, 392, and 393 of the FMCSRs to remove obsolete and redundant regulations; respond to several petitions for rulemaking; provide improved definitions of vehicle types, systems, and components; resolve inconsistencies between part 393 and NHTSA's FMVSSs under 49 CFR part 571; and codify certain FMCSA regulatory guidance concerning the requirements of part 393. Generally, the amendments do not involve the establishment of new or more stringent requirements, but a clarification of existing requirements. This action is intended to make many sections more concise, easier to understand and more performance oriented. Accordingly, FMCSA has considered the economic impacts of the rulemaking on small entities and certifies that this rule will not have a significant economic impact on a substantial number of small entities. A regulatory flexibility analysis has been prepared by the Agency and is available in the docket.

Unfunded Mandates Reform Act of 1995

This rulemaking will not impose an unfunded Federal mandate, as defined by the Unfunded Mandates Reform Act of 1995 (2 U.S.C. § 1532 *et seq.*), that will result in the expenditure by State, local, and tribal governments, in the aggregate, or by the private sector, of $120.7 million or more in any 1 year.

Executive Order 12988 (Civil Justice Reform)

This action will meet applicable standards in sections 3(a) and 3(b)(2) of Executive Order 12988, Civil Justice Reform, to minimize litigation,

eliminate ambiguity, and reduce burden.

Executive Order 13045 (Protection of Children)

FMCSA has analyzed this action under Executive Order 13045, Protection of Children from Environmental Health Risks and Safety Risks. This rulemaking will not concern an environmental risk to health or safety that may disproportionately affect children.

Executive Order 12630 (Taking of Private Property)

This rulemaking will not effect a taking of private property or otherwise have taking implications under Executive Order 12630, Governmental Actions and Interference with Constitutionally Protected Property Rights.

Executive Order 13132 (Federalism)

This action has been analyzed in accordance with the principles and criteria contained in Executive Order 13132. It has been determined that this rulemaking will not have a substantial direct effect on States, nor will it limit the policy-making discretion of the States. Nothing in this document will preempt any State law or regulation.

Executive Order 12372 (Intergovernmental Review)

Catalog of Federal Domestic Assistance Program Number 20.217, Motor Carrier Safety. The regulations implementing Executive Order 12372 regarding intergovernmental consultation on Federal programs and activities do not apply to this program.

Paperwork Reduction Act

This final rule does not contain a collection of information requirement for the purposes of the Paperwork Reduction Act of 1995, 44 U.S.C. 3501 *et seq.*

National Environmental Policy Act

We have analyzed this action for purposes of the National Environmental Policy Act of 1969 (42 U.S.C. 4321 *et seq.*) and have determined that this action will not have an effect on the quality of the environment. However, an environmental assessment (EA) is required because the rulemaking is not among those covered by a categorical exclusion. A copy of the EA is included in the docket referenced at the beginning of this notice.

In accordance with the National Environmental Policy Act and the Council of Environmental Quality Regulations (40 CFR parts 1500–1508), the agency has prepared a finding of no significant impact (FONSI). A copy of the FONSI is included in the docket at the beginning of this notice.

Executive Order 13211 (Energy Effects)

We have analyzed this action under Executive Order 13211, Actions Concerning Regulations That Significantly Affect Energy Supply, Distribution or Use. We have determined that it will not be a ''significant energy action'' under that order because it will not be economically significant and would not be likely to have a significant adverse effect on the supply, distribution, or use of energy.

List of Subjects

49 CFR Part 390

Highway safety, Highways and roads, Intermodal transportation, Motor carriers, Motor vehicle identification, Motor vehicle safety, Reporting and recordkeeping requirements.

49 CFR Part 392

Highway safety, Highways and roads, Motor carriers—driving practices, Motor vehicle safety.

49 CFR Part 393

Highways and roads, Incorporation by reference, Motor carriers, Motor vehicle equipment, Motor vehicle safety.

Issued on: July 13, 2005.

Annette M. Sandberg,

Administrator.

■ In consideration of the foregoing, FMCSA amends title 49, Code of Federal Regulations, subchapter B, chapter III, as follows:

PART 390—[AMENDED]

■ 1. The authority citation for part 390 continues to read as follows:

Authority: 49 U.S.C. 508, 13301, 13902, 31133, 31136, 31502, 31504, and sec. 204, Pub. L. 104–88, 109 Stat. 803, 941 (49 U.S.C. 701 note); sec. 114, Pub. L. 103–311, 108 Stat. 1673, 1677; sec. 217, Pub. L. 106–159, 113 Stat. 1748, 1767; and 49 CFR 1.73.

■ 2. Section 390.5 is amended by revising the definition of driveaway-towaway operation to read as follows:

§ 390.5 Definitions.

* * * * *

Driveaway-towaway operation means an operation in which an empty or unladen motor vehicle with one or more sets of wheels on the surface of the roadway is being transported:

(1) Between vehicle manufacturer's facilities;

(2) Between a vehicle manufacturer and a dealership or purchaser;

(3) Between a dealership, or other entity selling or leasing the vehicle, and a purchaser or lessee;

(4) To a motor carrier's terminal or repair facility for the repair of disabling damage (as defined in § 390.5) following a crash; or

(5) To a motor carrier's terminal or repair facility for repairs associated with the failure of a vehicle component or system; or

(6) By means of a saddle-mount or tow-bar.

* * * * *

PART 392—[AMENDED]

■ 3. The authority citation for part 392 continues to read as follows:

Authority: 49 U.S.C. 13902, 31136, 31502; and 49 CFR 1.73.

■ 4. Section 392.33 is revised to read as follows:

§ 392.33 Obscured lamps or reflective devices/material.

(a) No commercial motor vehicle shall be driven when any of the lamps or reflective devices/material required by subpart B of part 393 of this title are obscured by the tailboard, or by any part of the load or its covering, by dirt, or other added vehicle or work equipment or otherwise.

(b) *Exception.* The conspicuity treatments on the front end protection devices of the trailer may be obscured by part of the load being transported.

PART 393—[AMENDED]

■ 5. The authority citation for part 393 continues to read as follows:

Authority: 49 U.S.C. 322, 31136, and 31502; Section 1041(b) of Pub. L. 102–240, 105 Stat. 1914, 1993 (1991); and 49 CFR 1.73.

■ 6. Section 393.1 is revised to read as follows:

§ 393.1 Scope of the rules in this part.

(a) The rules in this part establish minimum standards for commercial motor vehicles as defined in § 390.5 of this title. Only motor vehicles (as defined in § 390.5) and combinations of motor vehicles which meet the definition of a commercial motor vehicle are subject to the requirements of this part. All requirements that refer to motor vehicles with a GVWR below 4,536 kg (10,001 pounds) are applicable only when the motor vehicle or combination of motor vehicles meets the definition of a commercial motor vehicle.

(b) Every employer and employee shall comply and be conversant with the requirements and specifications of this part. No employer shall operate a

commercial motor vehicle, or cause or permit it to be operated, unless it is equipped in accordance with the requirements and specifications of this part.

■ 7. Section 393.5 is amended by removing the definitions of ''bus'' and ''container chassis''; and by adding in alphabetical order definitions for ''air brake system,'' ''air-over-hydraulic brake system,'' ''auxiliary driving lamp,'' ''boat trailer,'' ''brake power assist unit,'' ''brake power unit,'' ''container chassis trailer,'' ''electric brake system,'' ''emergency brake,'' ''front fog lamp,'' ''hydraulic brake system,'' ''multi-piece windshield,'' ''split service brake system,'' ''tow bar,'' ''trailer kingpin,'' ''vacuum brake system,'' ''windshield''; and by revising the definitions of ''chassis,'' ''clearance lamp,'' ''heater,'' ''heavy hauler trailer,'' ''parking brake system,'' ''side marker lamp (intermediate),'' and ''side marker lamps'' to read as follows:

§ 393.5 Definitions.

* * * * *

Air brake system. A system, including an air-over-hydraulic brake subsystem, that uses air as a medium for transmitting pressure or force from the driver control to the service brake, but does not include a system that uses compressed air or vacuum only to assist the driver in applying muscular force to hydraulic or mechanical components.

Air-over-hydraulic brake subsystem. A subsystem of the air brake system that uses compressed air to transmit a force from the driver control to a hydraulic brake system to actuate the service brakes.

* * * * *

Auxiliary driving lamp. A lighting device mounted to provide illumination forward of the vehicle which supplements the upper beam of a standard headlighting system. It is not intended for use alone or with the lower beam of a standard headlamp system.

* * * * *

Boat trailer. A trailer designed with cradle-type mountings to transport a boat and configured to permit launching of the boat from the rear of the trailer.

* * * * *

Brake power assist unit. A device installed in a hydraulic brake system that reduces the operator effort required to actuate the system, but which if inoperative does not prevent the operator from braking the vehicle by a continued application of muscular force on the service brake control.

Brake power unit. A device installed in a brake system that provides the energy required to actuate the brakes, either directly or indirectly through an auxiliary device, with the operator action consisting only of modulating the energy application level.

* * * * *

Chassis. The load-supporting frame of a commercial motor vehicle, exclusive of any appurtenances which might be added to accommodate cargo.

Clearance Lamps. Lamps that provide light to the front or rear, mounted on the permanent structure of the vehicle, such that they indicate the overall width of the vehicle.

Container chassis trailer. A semitrailer of skeleton construction limited to a bottom frame, one or more axles, specially built and fitted with locking devices for the transport of intermodal cargo containers, so that when the chassis and container are assembled, the units serve the same function as an over the road trailer.

* * * * *

Electric brake system. A system that uses electric current to actuate the service brake.

Emergency brake. A mechanism designed to stop a motor vehicle after a failure of the service brake system.

* * * * *

Front fog lamp. A lighting device whose beam provides downward illumination forward of the vehicle and close to the ground, and is to be used only under conditions of rain, snow, dust, smoke or fog. A pair of fog lamps may be used alone, with parking, tail, side, marker, clearance and identification lamps, or with a lower beam headlamp at the driver's discretion in accordance with state and local use law.

* * * * *

Heater. Any device or assembly of devices or appliances used to heat the interior of any motor vehicle. This includes a catalytic heater which must meet the requirements of § 177.834(l)(2) of this title when Class 3 (flammable liquid) or Division 2.1 (flammable gas) is transported.

Heavy hauler trailer. A trailer which has one or more of the following characteristics, but which is not a container chassis trailer:

(1) Its brake lines are designed to adapt to separation or extension of the vehicle frame; or

(2) Its body consists only of a platform whose primary cargo-carrying surface is not more than 1,016 mm (40 inches) above the ground in an unloaded condition, except that it may include sides that are designed to be easily removable and a permanent ''front-end structure'' as that term is used in § 393.106 of this title.

* * * * *

Hydraulic brake system. A system that uses hydraulic fluid as a medium for transmitting force from a service brake control to the service brake, and that may incorporate a brake power assist unit, or a brake power unit.

* * * * *

Multi-piece windshield. A windshield consisting of two or more windshield glazing surface areas.

Parking brake system. A mechanism designed to prevent the movement of a stationary motor vehicle.

* * * * *

Side marker lamp (Intermediate). A lamp mounted on the side, on the permanent structure of the motor vehicle that provides light to the side to indicate the approximate middle of the vehicle, when the motor vehicle is 9.14 meters (30 feet) or more in length.

Side Marker Lamps. Lamps mounted on the side, on the permanent structure of the motor vehicle as near as practicable to the front and rear of the vehicle, that provide light to the side to indicate the overall length of the motor vehicle.

* * * * *

Split service brake system. A brake system consisting of two or more subsystems actuated by a single control designed so that a leakage-type failure of a pressure component in a single subsystem (except structural failure of a housing that is common to two or more subsystems) shall not impair the operation of any other subsystem.

* * * * *

Tow bar. A strut or column-like device temporarily attached between the rear of a towing vehicle and the front of the vehicle being towed.

* * * * *

Trailer kingpin. A pin (with a flange on its lower end) which extends vertically from the front of the underside of a semitrailer and which locks into a fifth wheel.

* * * * *

Vacuum brake system. A system that uses a vacuum and atmospheric pressure for transmitting a force from the driver control to the service brake, not including a system that uses vacuum only to assist the driver in applying muscular force to hydraulic or mechanical components.

* * * * *

Windshield. The principal forward facing glazed surface provided for forward vision in operating a motor vehicle.

* * * * *

■ 8. Section 393.7 is amended by redesignating paragraphs (b)(1) through (b)(6) as (b)(17) through (b)(23), adding new paragraphs (b)(1) through (b)(16), revising newly redesignated (b)(17) and adding paragraphs (c)(7) and (c)(8) to read as follows:

§ 393.7 Matters incorporated by reference.

* * * * *

(b)(1) Auxiliary Upper Beam Lamps, Society of Automotive Engineers (SAE) J581, July 2004, incorporation by reference approved for § 393.24(b).

(2) Front Fog Lamp, SAE J583, August 2004, incorporation by reference approved for § 393.24(b).

(3) Stop Lamps for Use on Motor Vehicles Less Than 2032 mm in Overall Width, SAE J586, March 2000, incorporation by reference approved for § 393.25(c).

(4) Stop Lamps and Front- and Rear-Turn Signal Lamps for Use on Motor Vehicles 2032 mm or more in Overall Width, SAE J2261, January 2002, incorporated by reference approved for § 393.25 (c).

(5) Tail Lamps (Rear Position Lamps) for Use on Motor Vehicles Less Than 2032 mm in Overall Width, SAE J585, March 2000, incorporation by reference approved for § 393.25(c).

(6) Tail Lamps (Rear Position Lamps) for Use on Vehicles 2032 mm or More in Overall Width, SAE J2040, March 2002, incorporation by reference approved for § 393.25(c).

(7) Turn Signal Lamps for Use on Motor Vehicles Less Than 2032 mm in Overall Width, SAE J588, March 2000, incorporation by reference approved for § 393.25(c).

(8) Sidemarker Lamps for Use on Road Vehicles Less Than 2032 mm in Overall Width, SAE J592, August 2000, incorporation by reference approved for § 393.25(c).

(9) Directional Flashing Optical Warning Devices for Authorized Emergency, Maintenance, and Service Vehicles, SAE J595, January 2005, incorporation by reference approved for § 393.25(e).

(10) Optical Warning Devices for Authorized Emergency, Maintenance, and Service Vehicles, SAE J845, May 1997, incorporation by reference approved for § 393.25(e).

(11) Gaseous Discharge Warning Lamp for Authorized Emergency, Maintenance, and Service Vehicles, SAE J1318, May 1998, incorporation by reference approved for § 393.25(e).

(12) Reflex Reflectors, SAE J594, December 2003, incorporation by reference approved for § 393.26(c).

(13) Standard Specification for Retroreflective Sheeting for Traffic Control, American Society of Testing and Materials, ASTM D 4956–04, 2004, incorporation by reference approved for § 393.26(c).

(14) Automobile, Truck, Truck-Tractor, Trailer, and Motor Coach Wiring, SAE J1292, October 1981, incorporated by reference approved for § 393.28.

(15) Long Stroke Air Brake Actuator Marking, SAE J1817, July 2001, incorporation by reference approved for § 393.47(e).

(16) American National Standard for Safety Glazing Materials for Glazing Motor Vehicles and Motor Vehicle Equipment Operating on Land Highways-Safety Standard, SAE Z26.1–1996, August 1997, incorporation by reference approved for § 393.62(d).

(17) Specification for Sound Level Meters, American National Standards Institute, S1.4–1983, incorporation by reference approved for § 393.94(c).

* * * * *

(c) *Availability.* The materials incorporated by reference are available as follows:

* * * * *

(7) Standards of the Society of Automotive Engineers (SAE). Information and copies may be obtained by writing to: Society of Automotive Engineers, Inc., 400 Commonwealth Drive, Warrendale, Pennsylvania 15096.

(8) Standards of the American National Standards Institute (ANSI). Information and copies may be obtained by writing to: American National Standards Institute, 25 West 43rd Street, New York, New York 10036.

* * * * *

■ 9. The title of subpart B is revised to read as follows:

Subpart B—Lamps, Reflective Devices, and Electrical Wiring

■ 10. Section 393.9 is revised to read as follows:

§ 393.9 Lamps operable, prohibition of obstructions of lamps and reflectors.

(a) All lamps required by this subpart shall be capable of being operated at all times. This paragraph shall not be construed to require that any auxiliary or additional lamp be capable of operating at all times.

(b) Lamps and reflective devices/material required by this subpart must not be obscured by the tailboard, or by any part of the load, or its covering by dirt, or other added vehicle or work equipment, or otherwise. Exception: The conspicuity treatments on the front end protection devices may be obscured by part of the load being transported.

■ 11. Section 393.11 is revised to read as follows:

§ 393.11 Lamps and reflective devices.

(a)(1) *Lamps and reflex reflectors.* Table 1 specifies the requirements for lamps, reflective devices and associated equipment by the type of commercial motor vehicle. The diagrams in this section illustrate the position of the lamps, reflective devices and associated equipment specified in Table 1. All commercial motor vehicles manufactured on or after December 25, 1968, must, at a minimum, meet the applicable requirements of 49 CFR 571.108 (FMVSS No. 108) in effect at the time of manufacture of the vehicle. Commercial motor vehicles manufactured before December 25, 1968, must, at a minimum, meet the requirements of subpart B of part 393 in effect at the time of manufacture.

(2) *Exceptions:* Pole trailers and trailer converter dollies must meet the part 393 requirements for lamps, reflective devices and electrical equipment in effect at the time of manufacture. Trailers which are equipped with conspicuity material which meets the requirements of § 393.11(b) are not required to be equipped with the reflex reflectors listed in Table 1 if—

(i) The conspicuity material is placed at the locations where reflex reflectors are required by Table 1; and

(ii) The conspicuity material when installed on the motor vehicle meets the visibility requirements for the reflex reflectors.

(b) *Conspicuity Systems.* Each trailer of 2,032 mm (80 inches) or more overall width, and with a GVWR over 4,536 kg (10,000 pounds), manufactured on or after December 1, 1993, except pole trailers and trailers designed exclusively for living or office use, shall be equipped with either retroreflective sheeting that meets the requirements of FMVSS No. 108 (S5.7.1), reflex reflectors that meet the requirements FMVSS No. 108 (S5.7.2), or a combination of retroreflective sheeting and reflex reflectors that meet the requirements of FMVSS No. 108 (S5.7.3). The conspicuity system shall be installed and located as specified in FMVSS No. 108 [S5.7.1.4 (for retroreflective sheeting), S5.7.2.2 (for reflex reflectors), S5.7.3 (for a combination of sheeting and reflectors)] and have certification and markings as required by S5.7.1.5 (for retroreflective tape) and S5.7.2.3 (for reflex reflectors).

(c) *Prohibition on the use of amber stop lamps and tail lamps.* No commercial motor vehicle may be equipped with an amber stop lamp, a tail lamp, or other lamp which is

optically combined with an amber stop lamp or tail lamp.

(d) *Prohibition on the use of auxiliary lamps that supplement the identification lamps.* No commercial motor vehicle may be equipped with lamps that are in a horizontal line with the required identification lamps unless those lamps are required by this regulation.

TABLE 1.—REQUIRED LAMPS AND REFLECTORS ON COMMERCIAL MOTOR VEHICLES

Item on the vehicle	Quantity	Color	Location	Position	Height above the road surface in millimeters (mm) (with English units in parenthesis) measured from the center of the lamp at curb weight	Vehicles for which the devices are required
Headlamps	2	White	Front	On the front at the same height, with an equal number at each side of the vertical center line as far apart as practicable.	Not less than 559 mm (22 inches) nor more than 1,372 mm (54 inches).	A, B, C
Turn signal (front). See footnotes #2 and 12.	2	Amber	At or near the front.	One on each side of the vertical centerline at the same height and as far apart as practicable.	Not less than 381 mm (15 inches) nor more than 2,108 mm (83 inches).	A, B, C
Identification lamps (front). See footnote #1.	3	Amber	Front	As close as practicable to the top of the vehicle, at the same height, and as close as practicable to the vertical centerline of the vehicle (or the vertical centerline of the cab where different from the centerline of the vehicle) with lamp centers spaced not less than 152 mm (6 inches) or more than 305 mm (12 inches) apart. Alternatively, the front lamps may be located as close as practicable to the top of the cab.	All three on the same level as close as practicable to the top of the motor vehicle.	B, C
Tail lamps. See footnotes #5 and 11.	2	Red	Rear	One lamp on each side of the vertical centerline at the same height and as far apart as practicable.	Both on the same level between 381 mm (15 inches) and 1,829 mm (72 inches).	A, B, C, D, E, F, G, H

TABLE 1.—REQUIRED LAMPS AND REFLECTORS ON COMMERCIAL MOTOR VEHICLES

Item on the vehicle	Quantity	Color	Location	Position	Height above the road surface in millimeters (mm) (with English units in parenthesis) measured from the center of the lamp at curb weight	Vehicles for which the devices are required
Stop lamps. See footnotes #5 and 13.	2	Red	Rear	One lamp on each side of the vertical centerline at the same height and as far apart as practicable.	Both on the same level between 381 mm (15 inches) and 1,829 mm (72 inches).	A, B, C, D, E, F, G
Clearance lamps. See footnotes #8, 9, 10, 15 & 17.	2	Amber	One on each side of the front of the vehicle.	One on each side of the vertical centerline to indicate overall width.	Both on the same level as high as practicable.	B, C, D, G, H
	2	Red	One on each side of the rear of the vehicle.	One on each side of the vertical centerline to indicate overall width.	Both on the same level as high as practicable.	B, D, G, H
Reflex reflector, intermediate (side).	2	Amber	One on each side.	At or near the midpoint between the front and rear side marker lamps, if the length of the vehicle is more than 9,144 mm (30 feet).	Between 381 mm (15inches) and 1,524 (60 inches).	A, B, D, F, G
Reflex reflector (rear). See footnotes #5, 6, and 8.	2	Red	Rear	One on each side of the vertical centerline, as far apart as practicable and at the same height.	Both on the same level, between 381 mm (15 inches) and 1,524 mm (60 inches).	A, B, C, D, E, F, G
Reflex reflector (rear side).	2	Red	One on each side (rear).	As far to the rear as practicable.	Both on the same level, between 381 mm (15 inches) and 1,524 mm (60 inches).	A, B, D, F, G
Reflex reflector (front side). See footnote #16.	2	Amber	One on each side (front).	As far to the front as practicable.	Between 381 mm (15 inches) and 1,524 mm (60 inches).	A, B, C, D, F, G
License plate lamp (rear). See footnote #11.	1	White	At rear license plate to illuminate the plate from the top or sides.		No requirements	A, B, C, D, F, G
Side marker lamp (front). See footnote #16.	2	Amber	One on each side.	As far to the front as practicable.	Not less than 381 mm (15 inches).	A, B, C, D, F

TABLE 1.—REQUIRED LAMPS AND REFLECTORS ON COMMERCIAL MOTOR VEHICLES—Continued

Item on the vehicle	Quantity	Color	Location	Position	Height above the road surface in millimeters (mm) (with English units in parenthesis) measured from the center of the lamp at curb weight	Vehicles for which the devices are required
Side marker lamp intermediate.	2	Amber	One on each side.	At or near the midpoint between the front and rear side marker lamps, if the length of the vehicle is more than 9,144 mm (30 feet).	Not less tan 381 mm (15 inches).	A, B, D, F, G
Side marker lamp (rear). See footnotes #4 and 8.	2	Red	One on each side.	As far to the rear as practicable.	Not less than 381 mm (15 inches), and on the rear of trailers not more than 1,524 mm (60 inches).	A, B, D, F, G
Turn signal (rear). See footnotes #5 and 12.	2	Amber or red	Rear	One lamp on each side of the vertical centerline as far apart as practicable.	Both on the same level, between 381 mm (15 inches) and 2,108 mm (83 inches).	A, B, C, D, E, F, G
Identification lamp (rear). See footnotes #3, 7, and 15.	3	Red	Rear	One as close as practicable to the vertical centerline. One on each side with lamp centers spaced not less than 152 mm (6 inches) or more than 305 mm (12 inches) apart.	All three on the same level as close as practicable to the top of the vehicle.	B, D, G
Vehicular hazard warning signal flasher lamps. See footnotes #5 and 12.	2	Amber	Front	One lamp on each side of the vertical centerline, as far apart as practicable.	Both on the same level, between 381 mm (15 inches) and 2,108 mm (83 inches).	A, B, C
	2	Amber or red	Rear	One lamp on each side of the vertical centerline, as far apart as practicable.	Both on the same level, between 381 mm (15 inches) and 2,108 mm (83 inches).	A, B, C, D, E, F, G
Backup lamp. See footnote #14.	1 or 2	White	Rear	Rear	No requirement	A, B, C
Parking lamp	2	Amber or white	Front	One lamp on each side of the vertical centerline, as far apart as practicable.	Both on the same level, between 381 mm (15 inches) and 2,108 mm (83 inches).	A

Legend: Types of commercial motor vehicles shown in the last column of Table 1.
A. Buses and trucks less than 2,032 mm (80 inches) in overall width.
B. Buses and trucks 2,032 mm (80 inches) or more in overall width.
C. Truck tractors.
D. Semitrailers and full trailers 2,032 mm (80 inches) or more in overall width except converter dollies.
E. Converter dolly.
F. Semitrailers and full trailers less than 2,032 mm (80 inches) in overall width.
G. Pole trailers.
H. Projecting loads.

Note: Lamps and reflectors may be combined as permitted by § 393.22 and S5.4 of 49 CFR 571.108, Equipment combinations.

Footnote—1 Identification lamps may be mounted on the vertical centerline of the cab where different from the centerline of the vehicle, except where the cab is not more than 42 inches wide at the front roofline, then a single lamp at the center of the cab shall be deemed to comply with the requirements for identification lamps. No part of the identification lamps or their mountings may extend below the top of the vehicle windshield.

Footnote—2 Unless the turn signals on the front are so constructed (double-faced) and located as to be visible to passing drivers, two turn signals are required on the rear of the truck tractor, one at each side as far apart as practicable.

Footnote—3 The identification lamps need not be visible or lighted if obscured by a vehicle in the same combination.

Footnote—4 Any semitrailer or full trailer manufactured on or after March 1, 1979, shall be equipped with rear side-marker lamps at a height of not less than 381 mm (15 inches), and on the rear of trailers not more than 1,524 mm (60 inches) above the road surface, as measured from the center of the lamp on the vehicle at curb weight.

Footnote—5 Each converter dolly, when towed singly by another vehicle and not as part of a full trailer, shall be equipped with one stop lamp, one tail lamp, and two reflectors (one on each side of the vertical centerline, as far apart as practicable) on the rear. Each converter dolly shall be equipped with rear turn signals and vehicular hazard warning signal flasher lamps when towed singly by another vehicle and not as part of a full trailer, if the converter dolly obscures the turn signals at the rear of the towing vehicle.

Footnote—6 Pole trailers shall be equipped with two reflex reflectors on the rear, one on each side of the vertical centerline as far apart as practicable, to indicate the extreme width of the trailer.

Footnote—7 Pole trailers, when towed by motor vehicles with rear identification lamps meeting the requirements of § 393.11 and mounted at a height greater than the load being transported on the pole trailer, are not required to have rear identification lamps.

Footnote—8 Pole trailers shall have on the rearmost support for the load: (1) two front clearance lamps, one on each side of the vehicle, both on the same level and as high as practicable to indicate the overall width of the pole trailer; (2) two rear clearance lamps, one on each side of the vehicle, both on the same level and as high as practicable to indicate the overall width of the pole trailer; (3) two rear side marker lamps, one on each side of the vehicle, both on the same level, not less than 375 mm (15 inches) above the road surface; (4) two rear reflex reflectors, one on each side, both on the same level, not less than 375 mm (15 inches) above the road surface to indicate maximum width of the pole trailer; and (5) one red reflector on each side of the rearmost support for the load. Lamps and reflectors may be combined as allowed in § 393.22.

Footnote—9 Any motor vehicle transporting a load which extends more than 102 mm (4 inches) beyond the overall width of the motor vehicle shall be equipped with the following lamps in addition to other required lamps when operated during the hours when headlamps are required to be used.

(1) The foremost edge of that portion of the load which projects beyond the side of the vehicle shall be marked (at its outermost extremity) with an amber lamp visible from the front and side.

(2) The rearmost edge of that portion of the load which projects beyond the side of the vehicle shall be marked (at its outermost extremity) with a red lamp visible from the rear and side.

(3) If the projecting load does not measure more than 914 mm (3 feet) from front to rear, it shall be marked with an amber lamp visible from the front, both sides, and rear, except that if the projection is located at or near the rear it shall be marked by a red lamp visible from front, side, and rear.

Footnote—10 Projections beyond rear of motor vehicles. Motor vehicles transporting loads which extend more than 1,219 mm (4 feet) beyond the rear of the motor vehicle, or which have tailboards or tailgates extending more than 1,219 mm (4 feet) beyond the body, shall have these projections marked as follows when the vehicle is operated during the hours when headlamps are required to be used:

(1) On each side of the projecting load, one red side marker lamp, visible from the side, located so as to indicate maximum overhang.

(2) On the rear of the projecting load, two red lamps, visible from the rear, one at each side; and two red reflectors visible from the rear, one at each side, located so as to indicate maximum width.

Footnote—11 To be illuminated when tractor headlamps are illuminated.

Footnote—12 Every bus, truck, and truck tractor shall be equipped with a signaling system that, in addition to signaling turning movements, shall have a switch or combination of switches that will cause the two front turn signals and the two rear signals to flash simultaneously as a vehicular traffic signal warning, required by § 392–22(a). The system shall be capable of flashing simultaneously with the ignition of the vehicle on or off.

Footnote—13 To be actuated upon application of service brakes.

Footnote—14 Backup lamp required to operate when bus, truck, or truck tractor is in reverse.

Footnote—15

(1) For the purposes of Section 393.11, the term ''overall width'' refers to the nominal design dimension of the widest part of the vehicle, exclusive of the signal lamps, marker lamps, outside rearview mirrors, flexible fender extensions, and mud flaps.

(2) Clearance lamps may be mounted at a location other than on the front and rear if necessary to indicate the overall width of a vehicle, or for protection from damage during normal operation of the vehicle.

(3) On a trailer, the front clearance lamps may be mounted at a height below the extreme height if mounting at the extreme height results in the lamps failing to mark the overall width of the trailer.

(4) On a truck tractor, clearance lamps mounted on the cab may be located to indicate the width of the cab, rather than the width of the vehicle.

(5) When the rear identification lamps are mounted at the extreme height of a vehicle, rear clearance lamps are not required to be located as close as practicable to the top of the vehicle.

Footnote—16 A trailer subject to this part that is less than 1829 mm (6 feet) in overall length, including the trailer tongue, need not be equipped with front side marker lamps and front side reflex reflectors.

Footnote—17 A boat trailer subject to this part whose overall width is 2032 mm (80 inches) or more need not be equipped with both front and rear clearance lamps provided an amber (front) and red (rear) clearance lamp is located at or near the midpoint on each side so as to indicate its extreme width.

BILLING CODE 4910–EX–P

Figure 1 - Truck Tractor Illustration for § 393.11

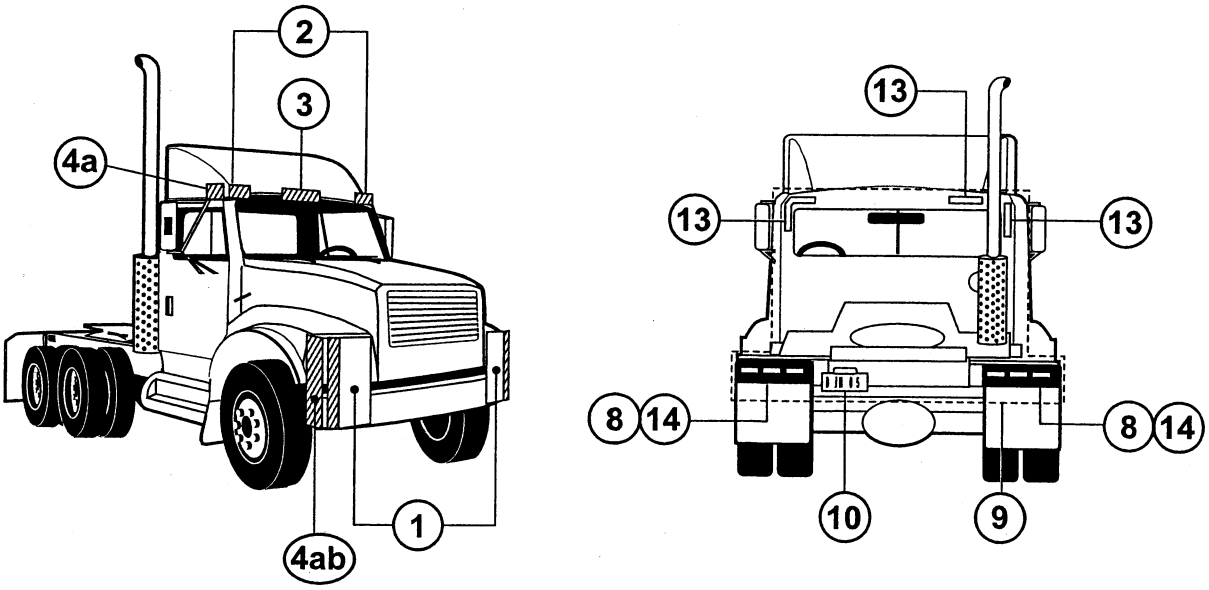

Figure 2 - Straight Truck Illustration for § 393.11

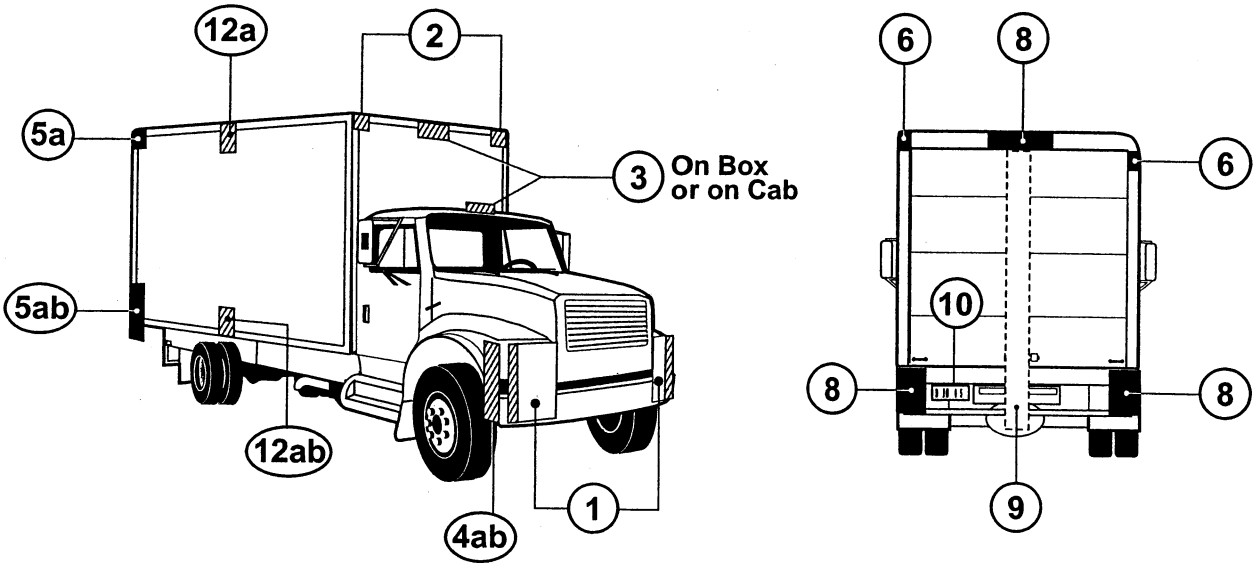

Figure 3 - Straight Truck Illustration for § 393.11

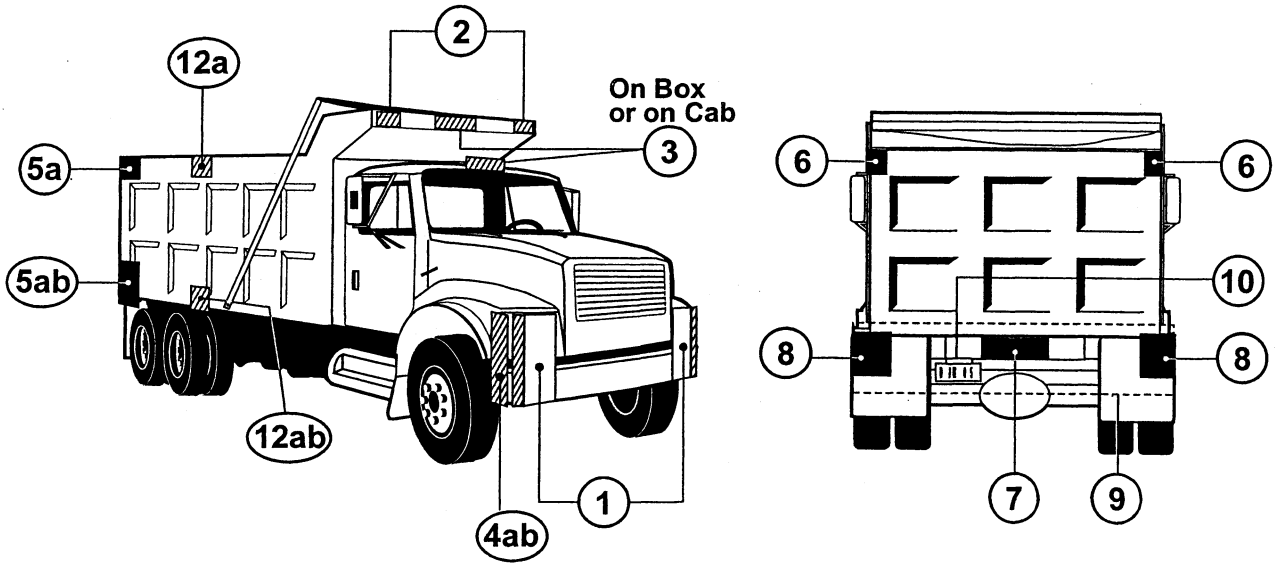

Figure 4 - Straight Truck Illustration for § 393.11

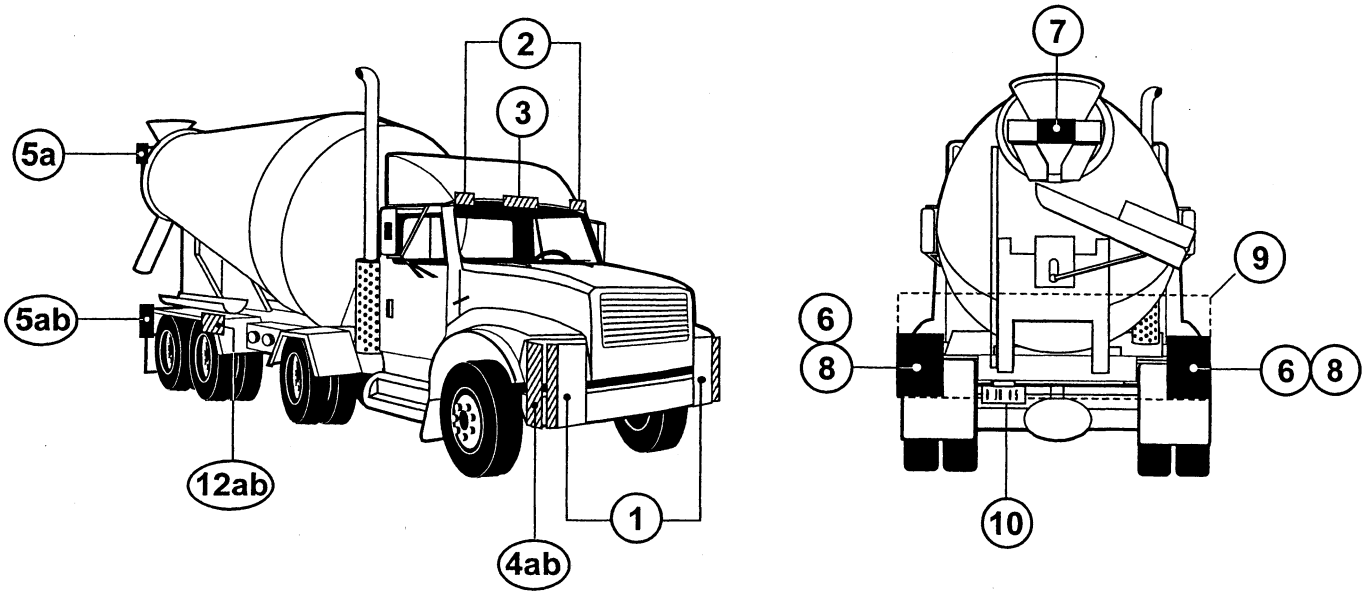

Figure 5 - Straight Truck Illustration for § 393.11

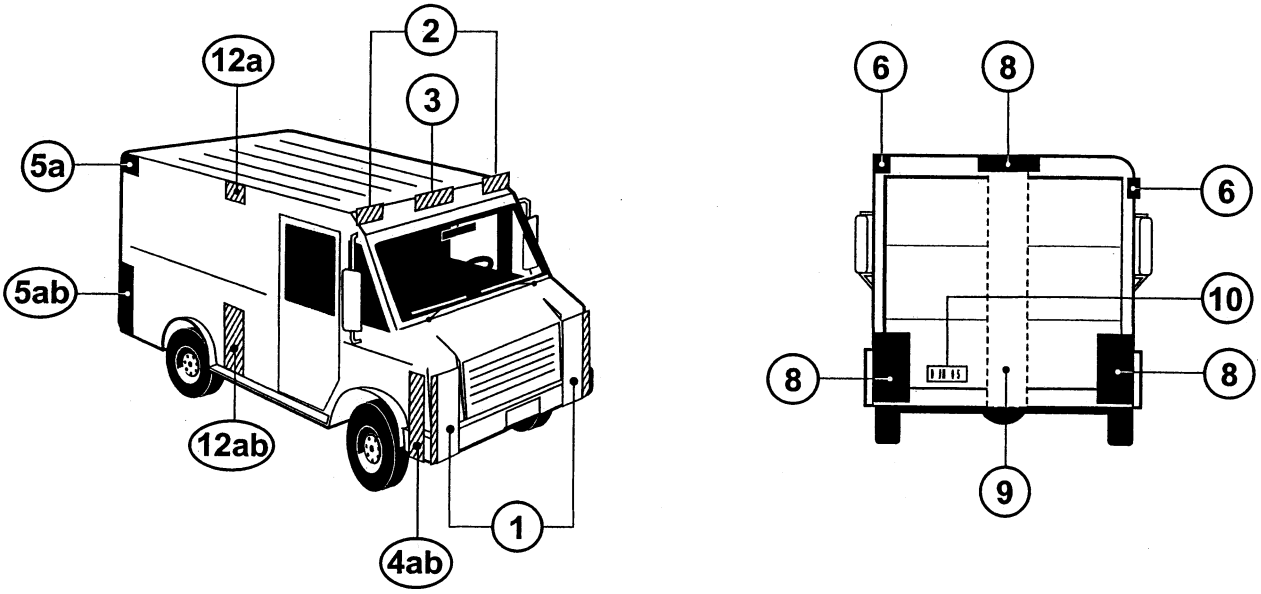

Figure 6 - Straight Truck Illustration for § 393.11

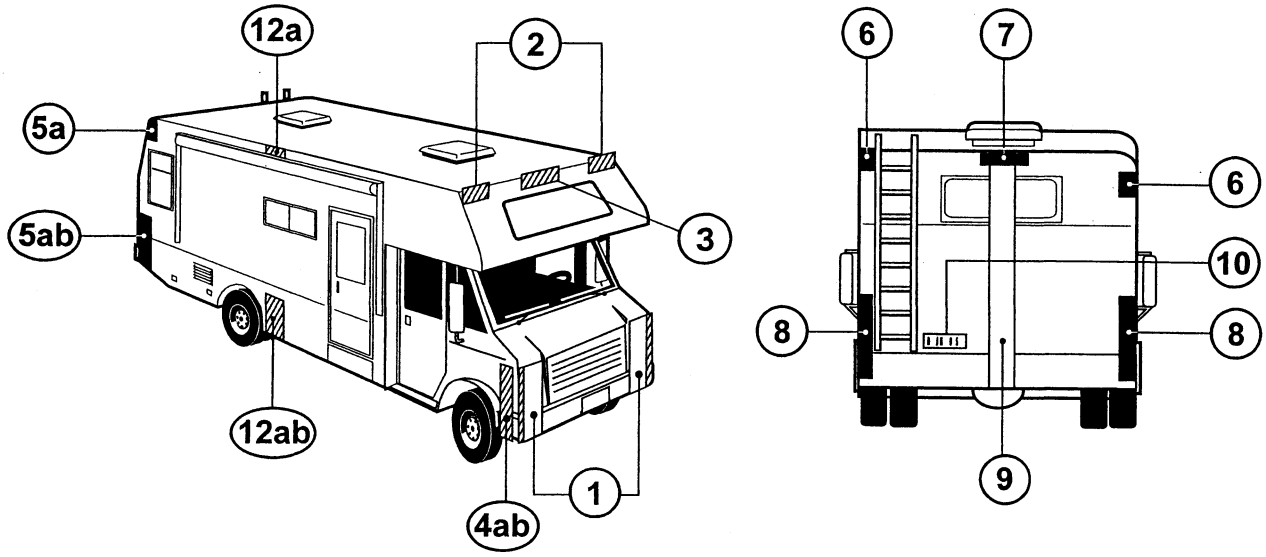

Figure 7 - Bus Illustration for § 393.11

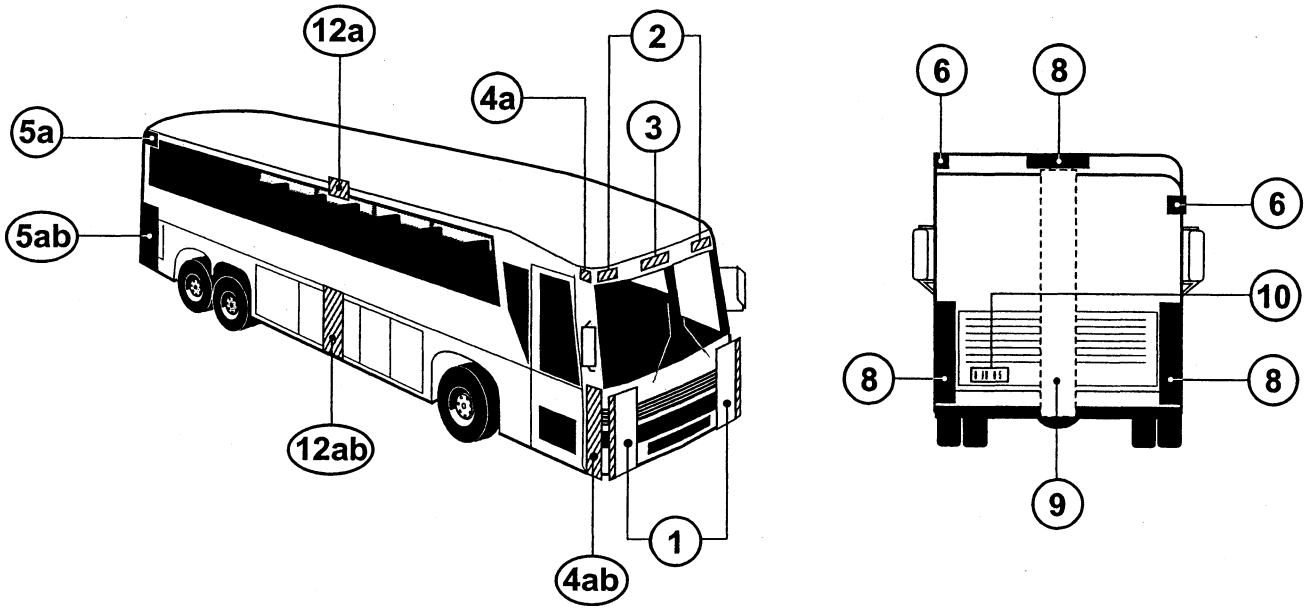

LEGEND FOR FIGURES 1 THROUGH 7 - 49 CFR 393.11
TRUCK & BUS VEHICLE ILLUSTRATIONS
(DOES NOT APPLY TO FIGURES 8 THROUGH 18 FOR TRAILERS)

Area	Equipment
1	Headlamps - Lower Beam
	Headlamps - Upper Beam
	Parking Lamps - Attention: *Required only on vehicles less than 2032mm wide*
	Front Turn Signal/Hazard Warning Lamps
2	Front Clearance Lamps - Attention: *Required for vehicles 2032mm wide or wider*
3	Front Identification Lamps (ID)
4a	Front Side Marker Lamps
4b	Front Side Reflex Reflectors
5a	Rear Side Marker Lamps - *Not required on Truck Tractors*
5b	Rear Side Reflex Reflectors - *Not required on Truck Tractors*
6	Rear Clearance Lamps Attention: *Required for vehicles 2032mm wide or wider, but not required on Truck Tractors*
7	Rear Identification Lamps (ID) Attention: *Required for vehicles 2032mm wide or wider, but not required on Truck Tractors*
8	Tail Lamps
	Stop Lamps
	Rear Turn Signal/Hazard Warning Lamps
	Rear Reflex Reflectors
9	Backup Lamp
10	License Plate Lamp
11	Center High Mounted Stop Lamp Attention: *Required for vehicles less than 2032mm wide and 4536kg*

ADDITIONAL EQUIPMENT FOR SPECIFIC TRUCKS AND BUS VEHICLES

Area	Equipment
12a	Intermediate Side Marker Lamps
12b	Intermediate Side Reflex Relectors

TRUCK TRACTORS

	DESCRIPTION
Area	Conspicuity Treatment
13	Rear Upper Body Marking
14	Rear Marking

Figure 8 - Semi-Trailer Illustration for § 393.11

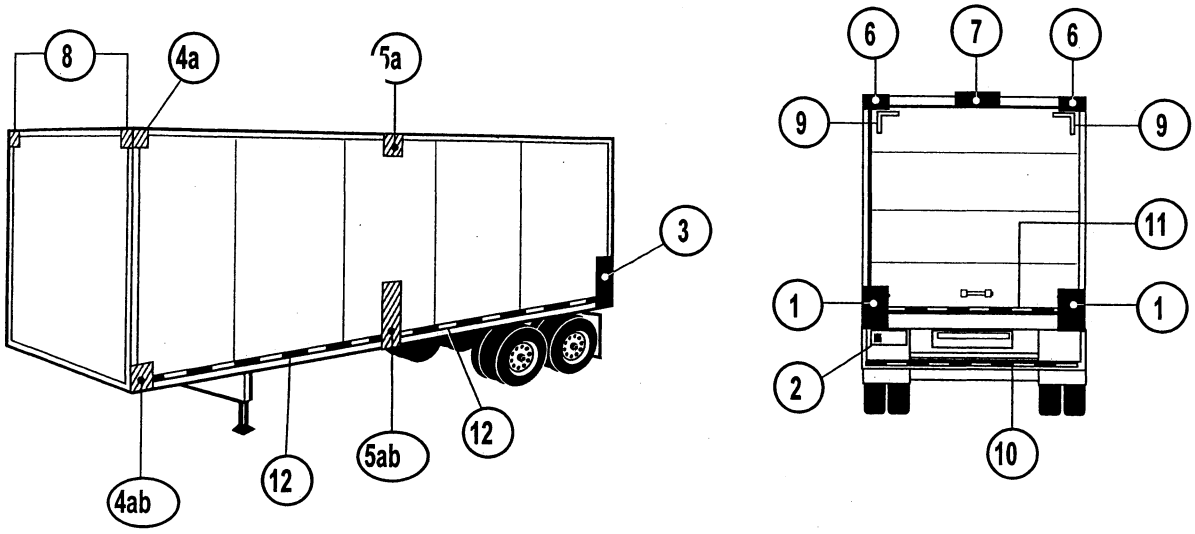

Figure 9 - Semi-Trailer Illustration for § 393.11

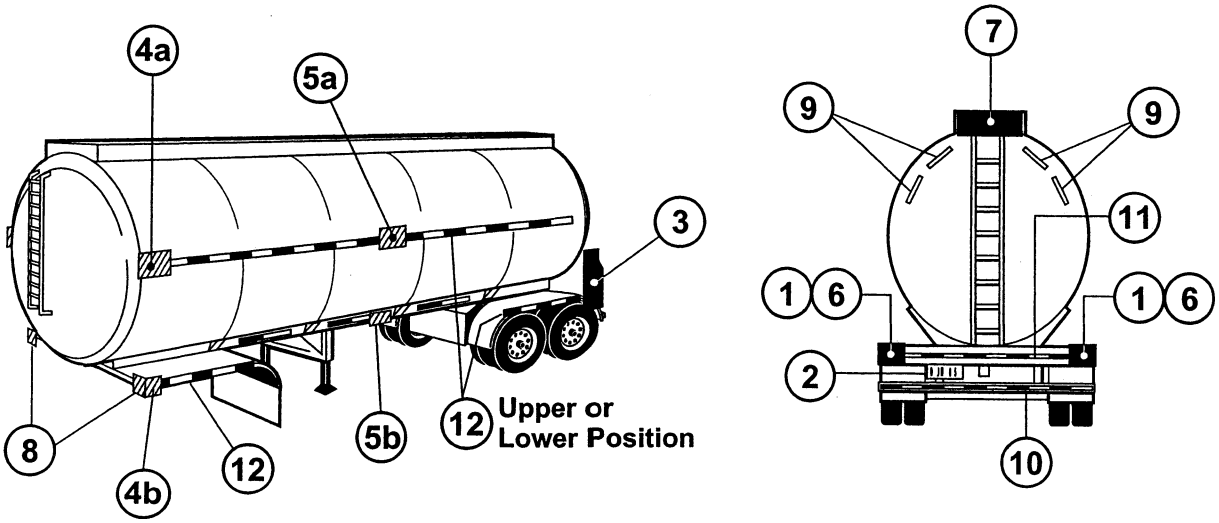

Figure 10 - Semi-Trailer Illustration for § 393.11

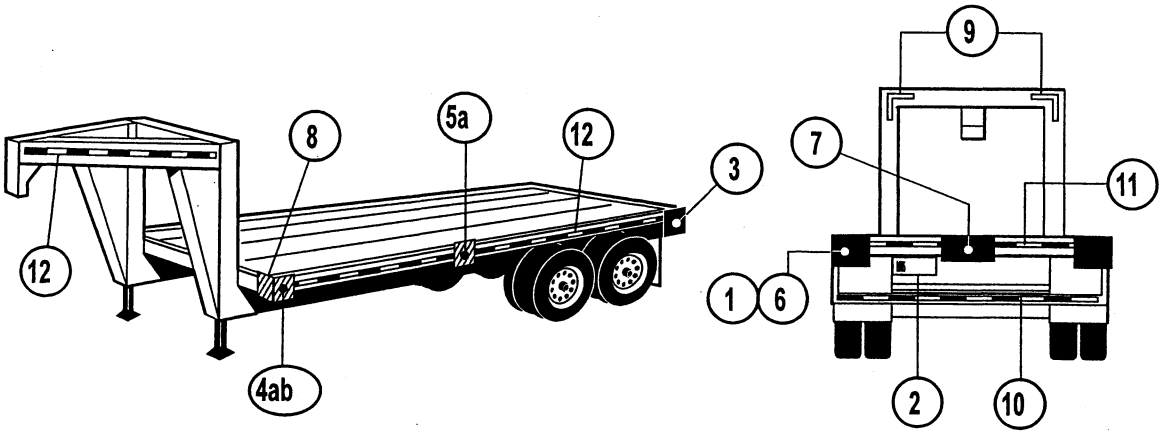

Figure 11 - Container Chassis Illustration for § 393.11

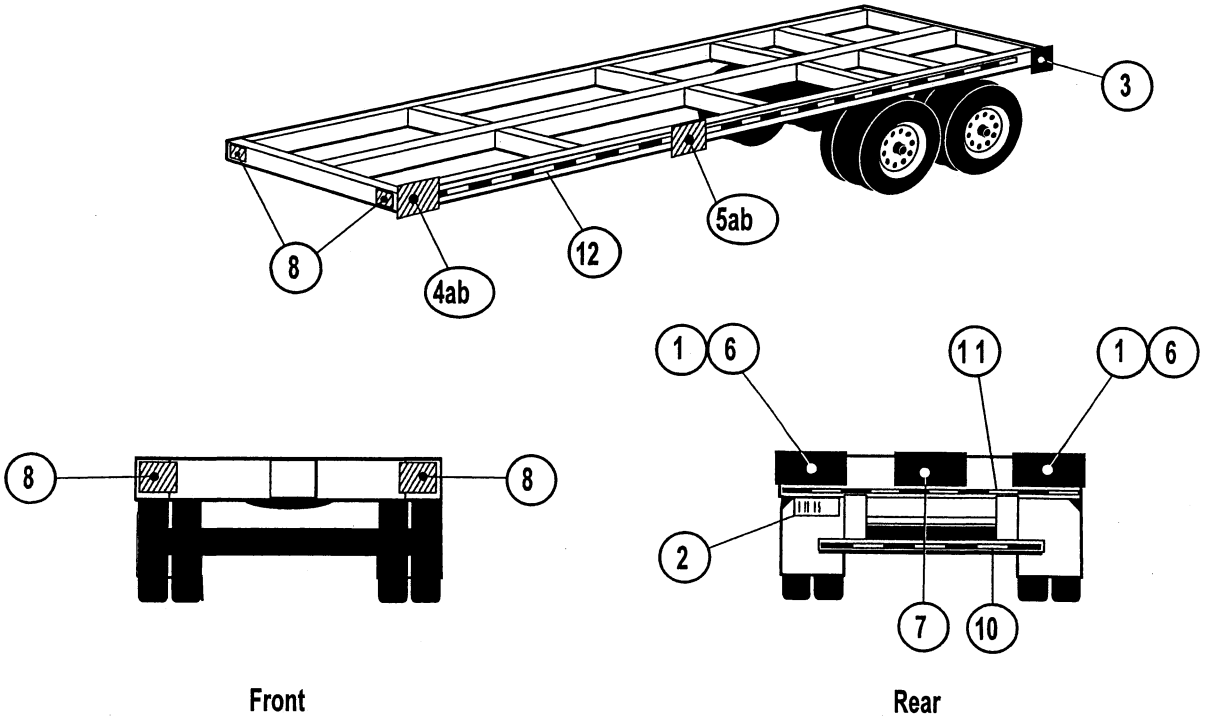

Figure 12 - Pole Trailer Illustration for § 393.11 - All Vehicle Widths

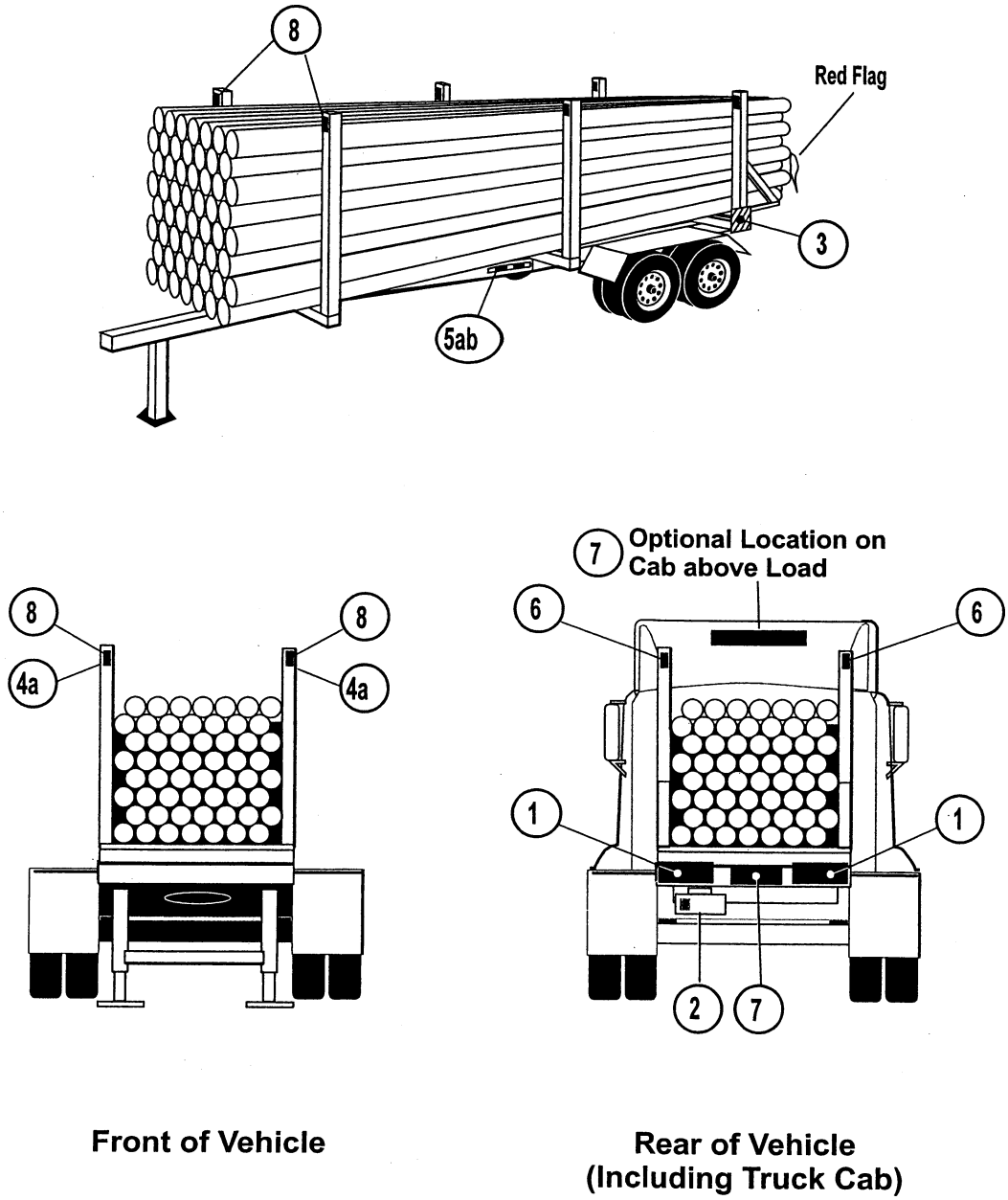

Figure 13 - Converter Dolly Illustration for § 393.11

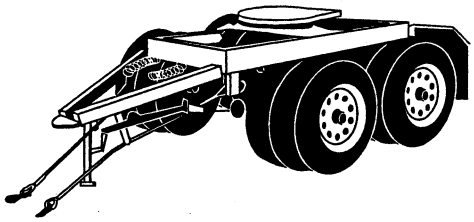

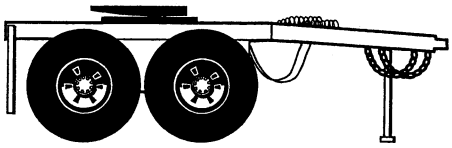

Side View of Dolly

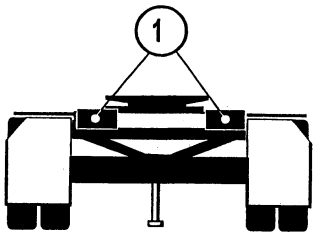

Rear

Figure 14 - Semi-Trailer Illustration for § 393.11

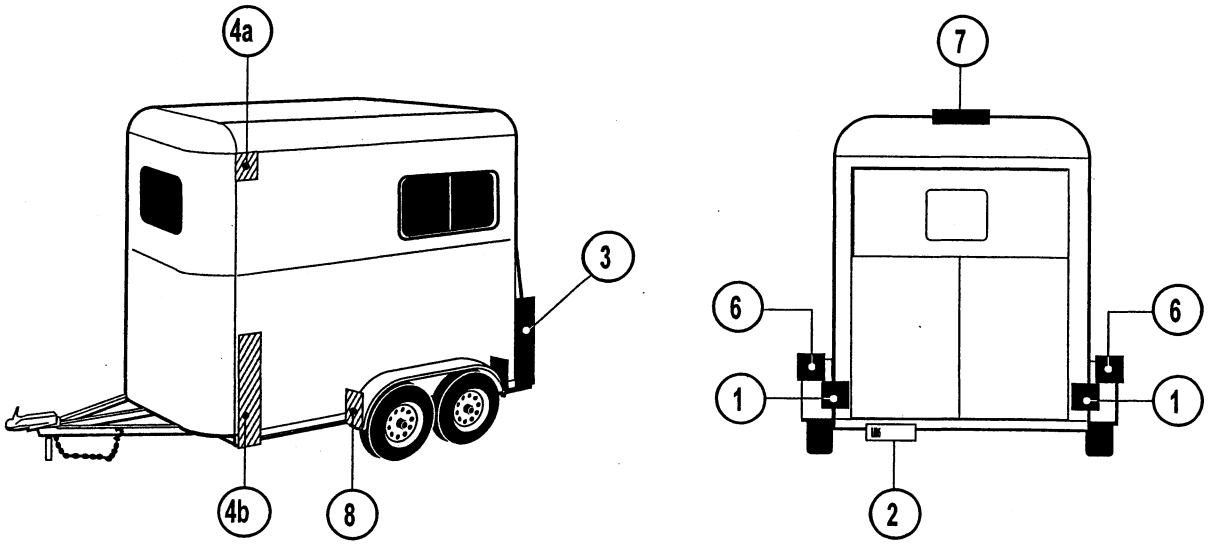

Figure 15 - Semi-Trailer Illustration for § 393.11

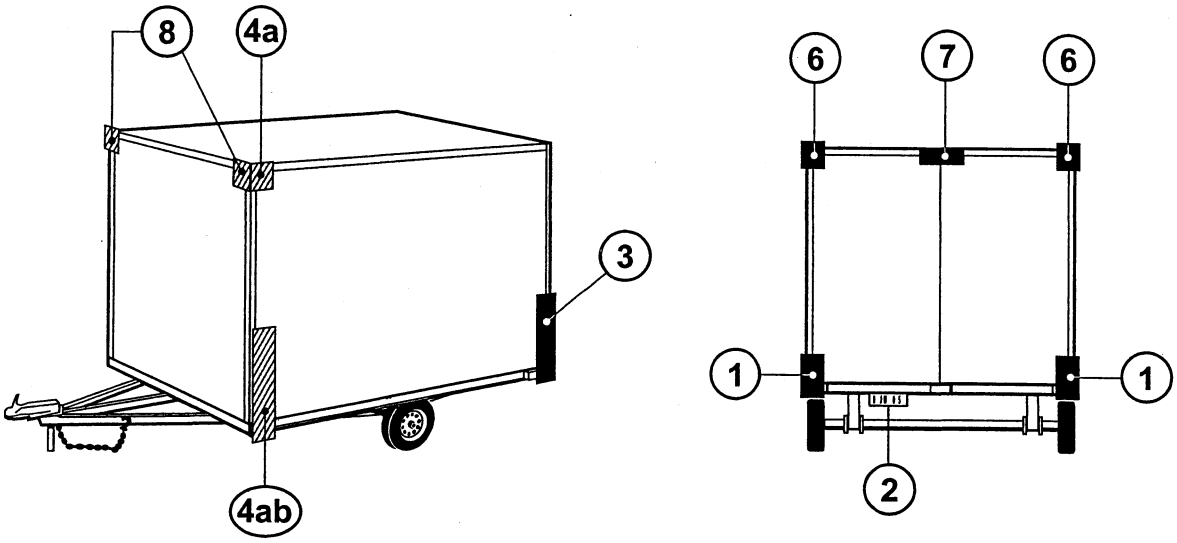

Figure 16 - Semi-Trailer Illustration for § 393.11

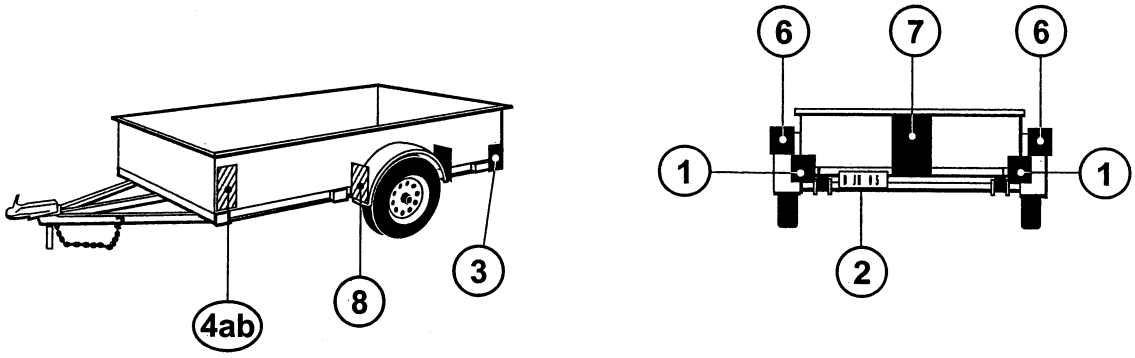

Figure 17 - Semi-Trailer Illustration for § 393.11

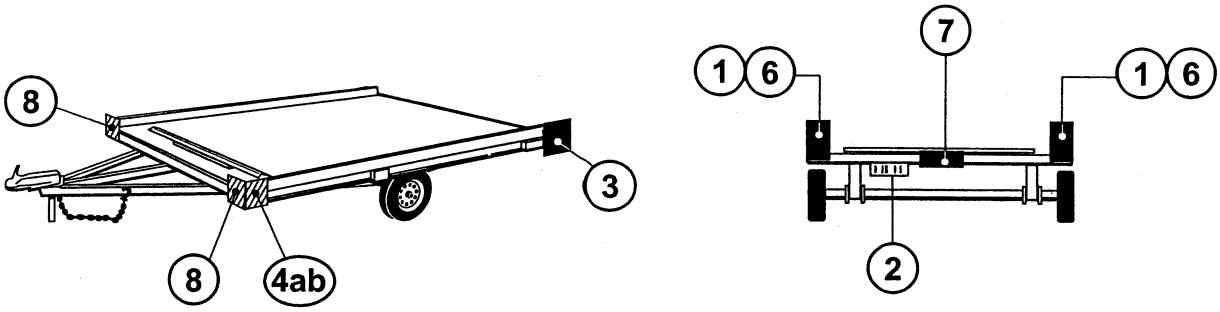

Figure 18 - Semi-Trailer Illustration for § 393.11

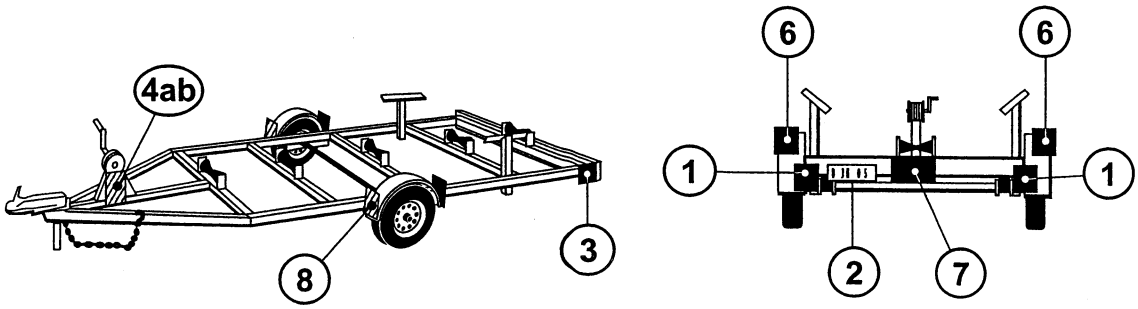

LEGEND FOR FIGURES 8 THROUGH 18 - 49 CFR 393.11 TRAILER ILLUSTRATIONS

(DOES NOT APPLY TO FIGURES 1 THROUGH 7 FOR TRUCKS & BUSES)

Area	Equipment
1	Tail Lamps
	Stop Lamps
	Rear Turn Signal Lamps
	Rear Reflex Reflectors
2	License Plate Lamp (s)
3	Rear Side Marker Lamps
	Rear Side Reflex Reflectors
4a	Front Side Marker Lamps
4b	Front Side Reflex Reflectors

ADDITIONAL EQUIPMENT FOR TRAILERS EXCEEDING THE FOLLOWING PARAMETERS

LENGTH 9.1 m (30 ft.) OR LONGER

Area	Equipment
5a	Intermediate Side Marker Lamps
5b	Intermediate Side Reflex Reflectors

WIDTH 2.032 m (80 in.) OR WIDER

Area	Equipment
6	Rear Clearance Lamps
7	Rear Identification Lamps
8	Front Clearance Lamps

WIDTH 2.032 m (80 in.) OR WIDER AND GVWR 4,536 kg (10,000 lb.) OR MORE

	DESCRIPTION
Area	Conspicuity Treatment
9	Rear Upper Body Marking
10	Bumper Bar Marking
11	Rear Lower Body Marking
12	Side Marking

■ 12. Section 393.17 is amended by revising the illustrations at the end of the section to read as follows:

§ 393.17 Lamp and reflectors—combinations in driveway-towaway operation.

* * * * *

Figure 19 - Single-Saddle-Mount Diagram to Illustrate § 393.17

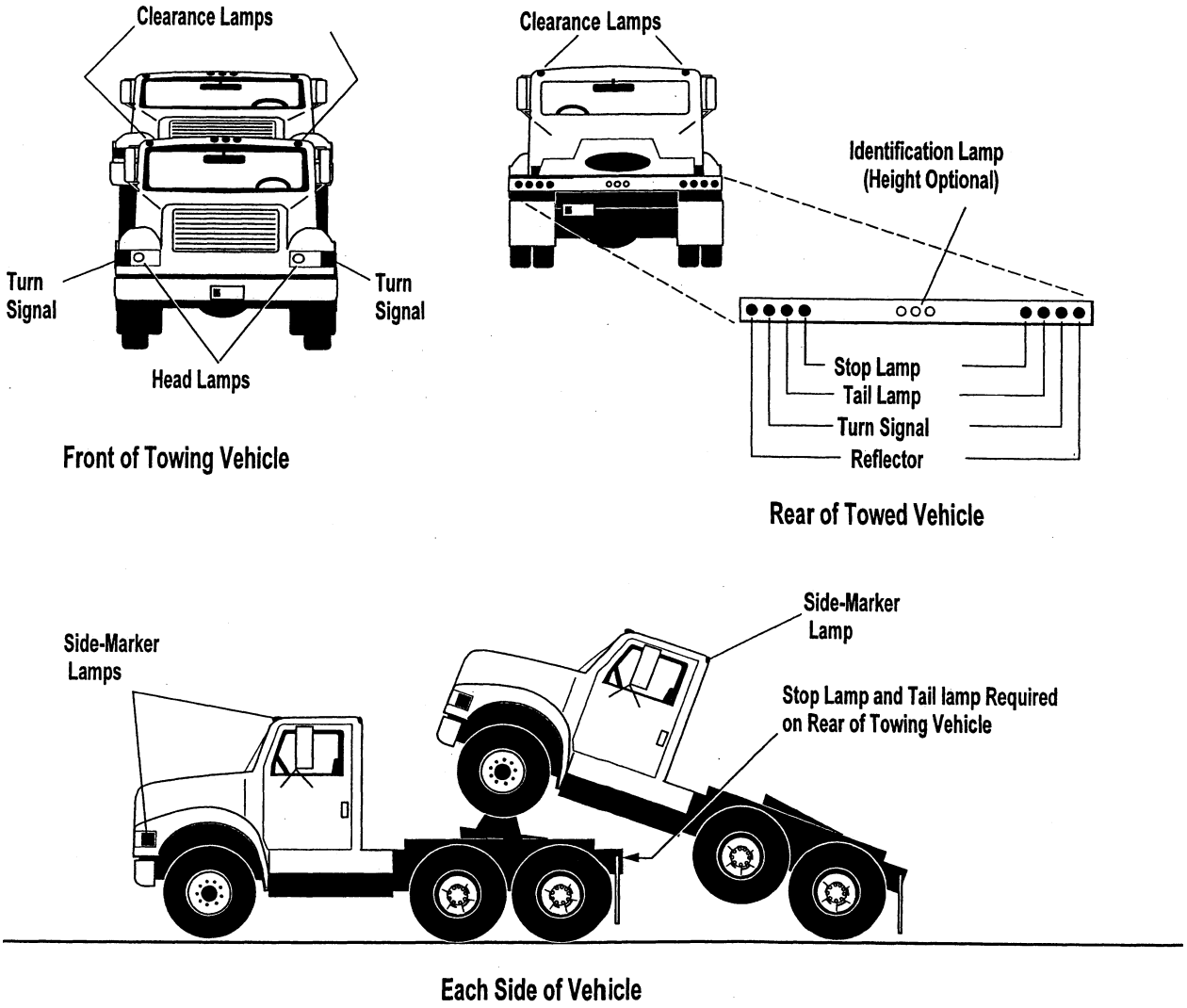

Lamps may be combined as permitted by § 393.22. The color of exterior lighting devices and reflectors shall conform to requirements of § 393.11

Figure 20 - Double-Saddle-Mount Diagram to Illustrate § 393.17

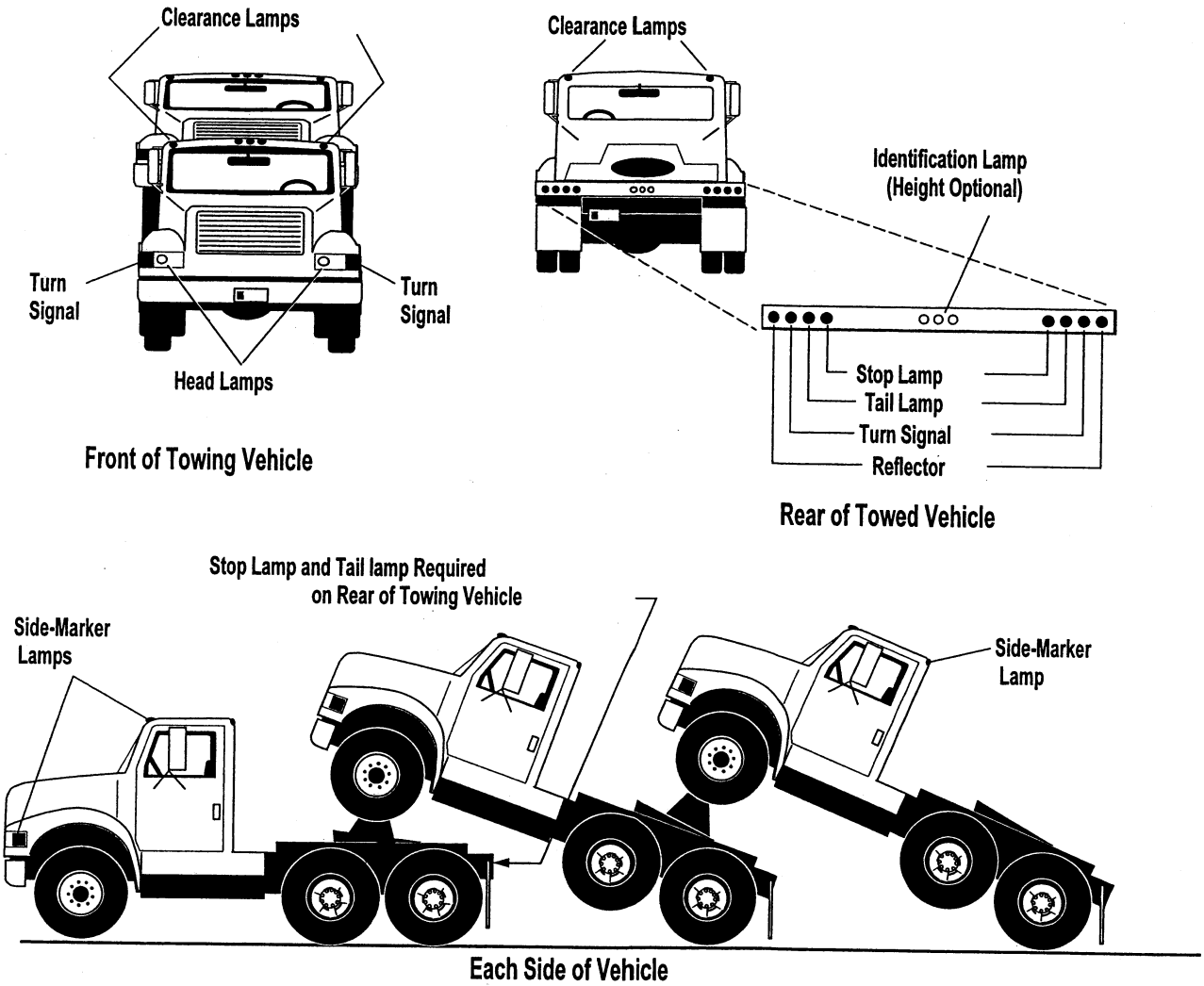

Lamps may be combined as permitted by § 393.22. The color of exterior lighting devices and reflectors shall conform to requirements of § 393.11

Figure 21 - Tow-bar Diagram to Illustrate § 393.17

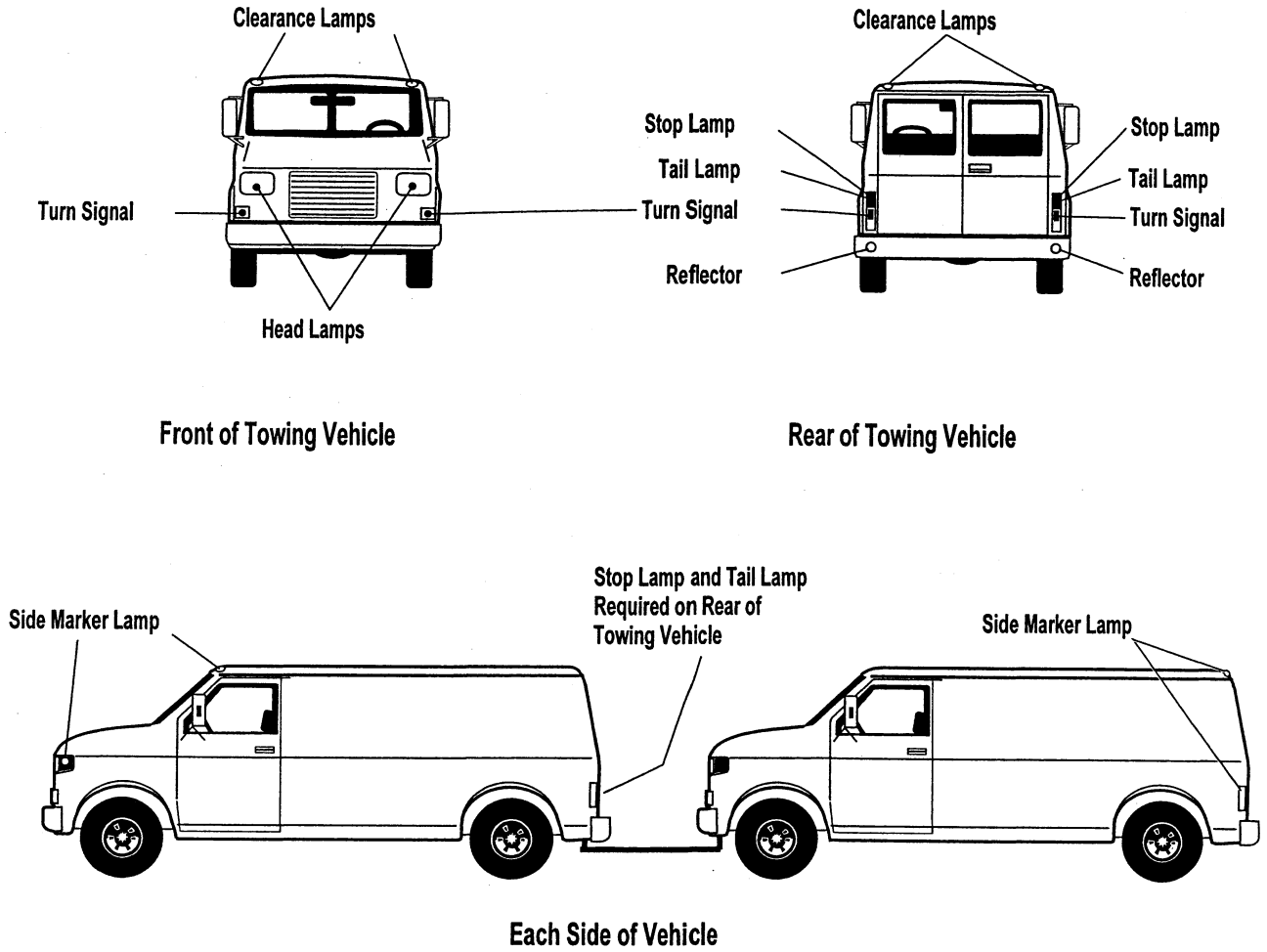

Lamps may be combined as permitted by § 393.22. The color of exterior lighting devices and reflectors shall conform to requirements of § 393.11

BILLING CODE 4910–EX–C

■ 13. Section 393.19 is revised to read as follows:

§ 393.19 Hazard warning signals.

The hazard warning signal operating unit on each commercial motor vehicle shall operate independently of the ignition or equivalent switch, and when activated, cause all turn signals required by § 393.11 to flash simultaneously.

§ 393.20 [Removed]

■ 14. Section 393.20 is removed and reserved.

■ 15. Section 393.23 is revised to read as follows:

§ 393.23 Power supply for lamps.

All required lamps must be powered by the electrical system of the motor vehicle with the exception of battery powered lamps used on projecting loads.

■ 16. Section 393.24 is revised to read as follows:

§ 393.24 Requirements for head lamps, auxiliary driving lamps and front fog lamps.

(a) *Headlamps.* Every bus, truck and truck tractor shall be equipped with headlamps as required by § 393.11(a). The headlamps shall provide an upper and lower beam distribution of light, selectable at the driver's will and be steady-burning. The headlamps shall be marked in accordance with FMVSS No. 108. Auxiliary driving lamps and/or front fog lamps may not be used to satisfy the requirements of this paragraph.

(b) *Auxiliary driving lamps and front fog lamps.* Commercial motor vehicles may be equipped with auxiliary driving lamps and/or front fog lamps for use in conjunction with, but not in lieu of the required headlamps. Auxiliary driving lamps shall meet SAE Standard J581 Auxiliary Upper Beam Lamps, July 2004, and front fog lamps shall meet SAE Standard J583 Front Fog Lamp, August 2004. (See § 393.7 for information on the incorporation by reference and availability of these documents.)

(c) *Mounting.* Headlamps shall be mounted and aimable in accordance with FMVSS No. 108. Auxiliary driving

lamps and front fog lamps shall be mounted so that the beams are aimable and the mounting shall prevent the aim of the lighting device from being disturbed while the vehicle is operating on public roads.

(d) *Aiming.* Headlamps, auxiliary driving lamps and front fog lamps shall be aimed to meet the aiming specifications in FMVSS No. 108 (49 CFR 571.108), SAE J581, and SAE J583, respectively.

■ 17. Section 393.25 is revised to read as follows:

§ 393.25 Requirements for lamps other than head lamps.

(a) *Mounting.* All lamps shall be securely mounted on a rigid part of the vehicle. Temporary lamps must be securely mounted to the load and are not required to be mounted to a permanent part of the vehicle.

(b) *Visibility.* Each lamp shall be located so that it meets the visibility requirements specified by FMVSS No. 108 in effect at the time of manufacture of the vehicle. Vehicles which were not subject to FMVSS No. 108 at the time of manufacture shall have each lamp located so that it meets the visibility requirements specified in the SAE standards listed in paragraph (c) of this section. If motor vehicle equipment (*e.g.*, mirrors, snow plows, wrecker booms, backhoes, and winches) prevents compliance with this paragraph by any required lamp, an auxiliary lamp or device meeting the requirements of this paragraph shall be provided. This shall not be construed to apply to lamps on one unit which are obscured by another unit of a combination of vehicles.

(c) *Specifications.* All required lamps (except marker lamps on projecting loads, lamps which are temporarily attached to vehicles transported in driveaway-towaway operations, and lamps on converter dollies and pole trailers) on vehicles manufactured on or after December 25, 1968, shall, at a minimum, meet the applicable requirements of FMVSS No. 108 in effect on the date of manufacture of the vehicle. Marker lamps on projecting loads, all lamps which are temporarily attached to vehicles transported in driveaway-towaway operations, and all lamps on converter dollies and pole trailers must meet the following applicable SAE standards: J586—Stop Lamps for Use on Motor Vehicles Less Than 2032 mm in Overall Width, March 2000; J2261 Stop Lamps and Front- and Rear-Turn Signal Lamps for Use on Motor Vehicles 2032 mm or More in Overall Width, January 2002; J585—Tail Lamps (Rear Position Lamps) for Use on Motor Vehicles Less Than 2032 mm in Overall Width, March 2000; J588—Turn Signal Lamps for Use on Motor Vehicles Less Than 2032 mm in Overall Width, March 2000; J2040—Tail Lamps (Rear Position Lamps) for Use on Vehicles 2032 mm or More in Overall Width, March 2002; J592—Sidemarker Lamps for Use on Road Vehicles Less Than 2032 mm in Overall Width, August 2000. (See § 393.7 for information on the incorporation by reference and availability of these documents.)

(d) (Reserved)

(e) *Lamps to be steady-burning.* All exterior lamps (both required lamps and any additional lamps) shall be steady-burning with the exception of turn signal lamps; hazard warning signal lamps; school bus warning lamps; amber warning lamps or flashing warning lamps on tow trucks and commercial motor vehicles transporting oversized loads; and warning lamps on emergency and service vehicles authorized by State or local authorities. Lamps combined into the same shell or housing with a turn signal are not required to be steady burning while the turn signal is in use. Amber warning lamps must meet SAE J845—Optical Warning Devices for Authorized Emergency, Maintenance and Service Vehicles, May 1997. Amber flashing warning lamps must meet SAE J595—Directional Flashing Optical Warning Devices for Authorized Emergency, Maintenance and Service Vehicles, January 2005. Amber gaseous discharge warning lamps must meet SAE J1318 Gaseous Discharge Warning Lamp for Authorized Emergency, Maintenance, and Service Vehicles, May 1998. (See § 393.7(b) for information on the incorporation by reference and availability of these documents.)

(f) *Stop lamp operation.* The stop lamps on each vehicle shall be activated upon application of the service brakes. The stop lamps are not required to be activated when the emergency feature of the trailer brakes is used or when the stop lamp is optically combined with the turn signal and the turn signal is in use.

■ 18. Section 393.26 is amended by revising paragraphs (a), (b), (c), and (d) introductory text to read as follows:

§ 393.26 Requirements for reflex reflectors.

(a) *Mounting.* Reflex reflectors shall be mounted at the locations required by § 393.11. In the case of motor vehicles so constructed that requirement for a 381 mm (15-inch) minimum height above the road surface is not practical, the reflectors shall be mounted as close as practicable to the required mounting height range. All permanent reflex reflectors shall be securely mounted on a rigid part of the vehicle. Temporary reflectors on projecting loads must be securely mounted to the load and are not required to be permanently mounted to a part of the vehicle. Temporary reflex reflectors on vehicles transported in driveaway-towaway operations must be firmly attached.

(b) *Specifications.* All required reflex reflectors (except reflex reflectors on projecting loads, vehicles transported in a driveaway-towaway operation, converter dollies and pole trailers) on vehicles manufactured on or after December 25, 1968, shall meet the applicable requirements of FMVSS No. 108 in effect on the date of manufacture of the vehicle. Reflex reflectors on projecting loads, vehicles transported in a driveaway-towaway operation, and all reflex reflectors on converter dollies and pole trailers must conform to SAE J594—Reflex Reflectors, December 2003.

(c) *Substitute material for side reflex reflectors.* Reflective material conforming to ASTM D 4956–04, Standard Specification for Retroreflective Sheeting for Traffic Control, may be used in lieu of reflex reflectors if the material as used on the vehicle, meets the performance standards in either Table I of SAE J594 or Table IA of SAE J594—Reflex Reflectors, December 2003. (See § 393.7(b) for information on the incorporation by reference and availability of these documents.)

(d) *Use of additional retroreflective surfaces.* Additional retroreflective surfaces may be used in conjunction with, but not in lieu of the reflex reflectors required in subpart B of part 393, and the substitute material for side reflex reflectors allowed by paragraph (c) of this section, provided:

* * * * *

§ 393.27 [Removed]

■ 18a. Section 393.27 is removed and reserved.

■ 19. Section 393.28 is revised to read as follows:

§ 393.28 Wiring systems.

Electrical wiring shall be installed and maintained to conform to SAE J1292—Automobile, Truck, Truck-Tractor, Trailer, and Motor Coach Wiring, October 1981, except the jumper cable plug and receptacle need not conform to SAE J560. The reference to SAE J1292 shall not be construed to require circuit protection on trailers. (See § 393.7(b) for information on the incorporation by reference and availability of this document.)

§ 393.29 [Removed]

■ 19a. Section 393.29 is removed and reserved.

■ 20. Sections 393.31, 393.32, and 393.33 are removed and reserved.

■ 21. Section 393.40 is revised to read as follows:

§ 393.40 Required brake systems.

(a) Each commercial motor vehicle must have brakes adequate to stop and hold the vehicle or combination of motor vehicles. Each commercial motor vehicle must meet the applicable service, parking, and emergency brake system requirements provided in this section.

(b) Service brakes. (1) *Hydraulic brake systems.* Motor vehicles equipped with hydraulic brake systems and manufactured on or after September 2, 1983, must, at a minimum, have a service brake system that meets the requirements of FMVSS No. 105 in effect on the date of manufacture. Motor vehicles which were not subject to FMVSS No. 105 on the date of manufacture must have a service brake system that meets the applicable requirements of §§ 393.42, 393.48, 393.49, 393.51, and 393.52 of this subpart.

(2) *Air brake systems.* Buses, trucks and truck-tractors equipped with air brake systems and manufactured on or after March 1, 1975, and trailers manufactured on or after January 1, 1975, must, at a minimum, have a service brake system that meets the requirements of FMVSS No. 121 in effect on the date of manufacture. Motor vehicles which were not subject to FMVSS No. 121 on the date of manufacture must have a service brake system that meets the applicable requirements of §§ 393.42, 393.48, 393.49, 393.51, and 393.52 of this subpart.

(3) *Vacuum brake systems.* Motor vehicles equipped with vacuum brake systems must have a service brake system that meets the applicable requirements of §§ 393.42, 393.48, 393.49, 393.51, and 393.52 of this subpart.

(4) *Electric brake systems.* Motor vehicles equipped with electric brake systems must have a service brake system that meets the applicable requirements of §§ 393.42, 393.48, 393.49 and 393.52 of this subpart.

(c) *Parking brakes.* Each commercial motor vehicle must be equipped with a parking brake system that meets the applicable requirements of § 393.41.

(d) Emergency brakes—partial failure of service brakes.

(1) *Hydraulic brake systems.* Motor vehicles manufactured on or after September 2, 1983, and equipped with a split service brake system must, at a minimum, meet the partial failure requirements of FMVSS No. 105 in effect on the date of manufacture.

(2) *Air brake systems.* Buses, trucks and truck tractors manufactured on or after March 1, 1975, and trailers manufactured on or after January 1, 1975, must be equipped with an emergency brake system which, at a minumum, meets the requirements of FMVSS No. 121 in effect on the date of manufacture.

(3) *Vehicles not subject to FMVSS Nos. 105 and 121 on the date of manufacture.* Buses, trucks and truck tractors not subject to FMVSS Nos. 105 or 121 on the date of manufacture must meet the requirements of § 393.40(e). Trailers not subject to FMVSS No. 121 at the time of manufacture must meet the requirements of § 393.43.

(e) Emergency brakes, vehicles manufactured on or after July 1, 1973. (1) A bus, truck, truck tractor, or a combination of motor vehicles manufactured on or after July 1, 1973, and not covered under paragraphs (d)(1) or (d)(2) of this section, must have an emergency brake system which consists of emergency features of the service brake system or an emergency system separate from the service brake system. The emergency brake system must meet the applicable requirements of §§ 393.43 and 393.52.

(2) A control by which the driver applies the emergency brake system must be located so that the driver can operate it from the normal seating position while restrained by any seat belts with which the vehicle is equipped. The emergency brake control may be combined with either the service brake control or the parking brake control. However, all three controls may not be combined.

(f) *Interconnected systems.* (1) If the brake systems required by § 393.40(a) are interconnected in any way, they must be designed, constructed, and maintained so that in the event of a failure of any part of the operating mechanism of one or more of the systems (except the service brake actuation pedal or valve), the motor vehicle will have operative brakes and, for vehicles manufactured on or after July 1, 1973, be capable of meeting the requirements of § 393.52(b).

(2) A motor vehicle to which the requirements of FMVSS No. 105 (S5.1.2), dealing with partial failure of the service brake, applied at the time of manufacture meets the requirements of § 393.40(f)(1) if the motor vehicle is maintained in conformity with FMVSS No. 105 and the motor vehicle is capable of meeting the requirements of § 393.52(b), except in the case of a structural failure of the brake master cylinder body.

(3) A bus is considered to meet the requirements of § 393.40(f)(1) if it meets the requirements of § 393.44 and § 393.52(b).

■ 22. Section 393.41 is revised to read as follows:

§ 393.41 Parking brake system.

(a) *Hydraulic-braked vehicles manufactured on or after September 2, 1983.* Each truck and bus (other than a school bus) with a GVWR of 4,536 kg (10,000 pounds) or less which is subject to this part and school buses with a GVWR greater than 4,536 kg (10,000 pounds) shall be equipped with a parking brake system as required by FMVSS No. 571.105 (S5.2) in effect at the time of manufacture. The parking brake shall be capable of holding the vehicle or combination of vehicles stationary under any condition of loading in which it is found on a public road (free of ice and snow). Hydraulic-braked vehicles which were not subject to the parking brake requirements of FMVSS No. 571.105 (S5.2) must be equipped with a parking brake system that meets the requirements of paragraph (c) of this section.

(b) *Air-braked power units manufactured on or after March 1, 1975, and air-braked trailers manufactured on or after January 1, 1975.*

Each air-braked bus, truck and truck tractor manufactured on and after March 1, 1975, and each air-braked trailer except an agricultural commodity trailer, converter dolly, heavy hauler trailer or pulpwood trailer, shall be equipped with a parking brake system as required by FMVSS No. 121 (S5.6) in effect at the time of manufacture. The parking brake shall be capable of holding the vehicle or combination of vehicles stationary under any condition of loading in which it is found on a public road (free of ice and snow). An agricultural commodity trailer, heavy hauler or pulpwood trailer shall carry sufficient chocking blocks to prevent movement when parked.

(c) Vehicles not subject to FMVSS Nos. 105 and 121 on the date of manufacture. (1) Each singly driven motor vehicle not subject to parking brake requirements of FMVSS Nos. 105 or 121 at the time of manufacturer, and every combination of motor vehicles must be equipped with a parking brake system adequate to hold the vehicle or combination on any grade on which it is operated, under any condition of

loading in which it is found on a public road (free of ice and snow).

(2) The parking brake system shall, at all times, be capable of being applied by either the driver's muscular effort or by spring action. If other energy is used to apply the parking brake, there must be an accumulation of that energy isolated from any common source and used exclusively for the operation of the parking brake.

Exception: This paragraph shall not be applicable to air-applied, mechanically-held parking brake systems which meet the parking brake requirements of FMVSS No. 121 (S5.6).

(3) The parking brake system shall be held in the applied position by energy other than fluid pressure, air pressure, or electric energy. The parking brake system shall not be capable of being released unless adequate energy is available to immediately reapply the parking brake with the required effectiveness.

■ 23. Section 393.42 is amended by revising the figure and revising paragraph (b) to read as follows:

§ 393.42 Brakes required on all wheels.

* * * * *

(b) *Exception.* (1) Trucks or truck tractors having three or more axles and manufactured before July 25, 1980, are not required to have brakes on the front wheels. However, these vehicles must meet the requirements of § 393.52.

(2) Motor vehicles being towed in a driveaway-towaway operation are not required to have operative brakes provided the combination of vehicles meets the requirements of § 393.52. This exception is not applicable to:

(i) Any motor vehicle towed by means of a tow-bar when another motor vehicle is full-mounted on the towed vehicle; and

(ii) Any combination of motor vehicles utilizing three or more saddle-mounts.

(3) Any semitrailer or pole trailer (laden or unladen) with a gross weight of 1,361 kg (3,000 pounds) or less which is subject to this part is not required to be equipped with brakes if the axle weight of the towed vehicle does not exceed 40 percent of the sum of the axle weights of the towing vehicle.

(4) Any full trailer or four-wheel pole trailer (laden or unladen) with a gross weight of 1,361 kg (3,000 pounds) or less which is subject to this part is not required to be equipped with brakes if the sum of the axle weights of the towed vehicle does not exceed 40 percent of the sum of the axle weights of the towing vehicle.

(5) Brakes are not required on the steering axle of a three-axle dolly which is steered by a co-driver.

(6) Loaded housemoving dollies, specialized trailers and dollies used to transport industrial furnaces, reactors, and similar motor vehicles are not required to be equipped with brakes, provided the speed at which the combination of vehicles will be operated does not exceed 32 km/hour (20 mph) and brakes on the combination of vehicles are capable of stopping the combination within 12.2 meters (40 feet) from the speed at which the vehicle is being operated or 32 km/hour (20 mph), whichever is less.

BILLING CODE 4910–EX–P

Figure 22 - Illustrations of Brake Requirements for Light-Duty Trailers in § 393.42

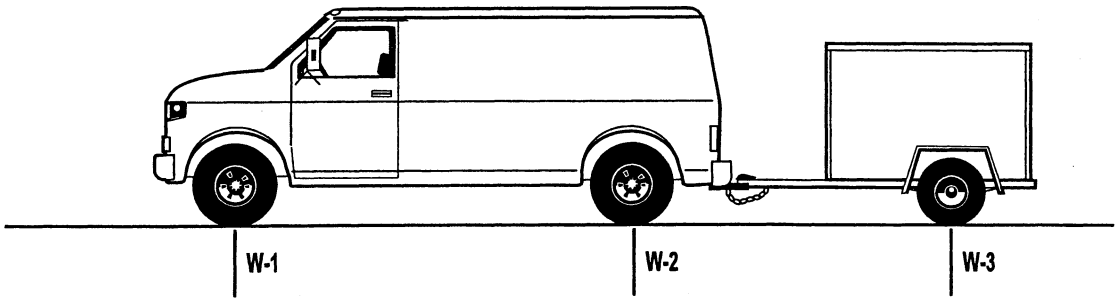

(Semitrailer or 2-wheel pole trailer of 1,360 kilograms (3,000 pounds) gross weight or less must be equipped with brakes if W-3 is greater than 40 percent of the sum of W-1 and W-2.)

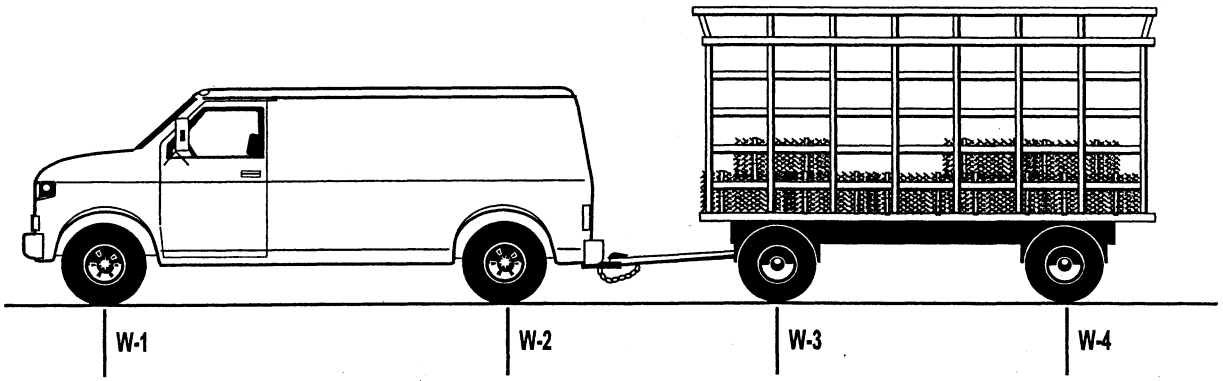

(Full trailer or 4-wheel pole trailer of 1,360 kilograms (3,000 pounds) gross weight or less must be equipped with brakes if the sum of W-3 and W-4 is greater than 40 percent of the sum of W-1 and W-2.)

BILLING CODE 4910–EX–C

■ 24. Section 393.43 is amended by revising paragraphs (a), (d) and (f) and by adding headings to paragraphs (b), (c), and (e) to read as follows:

§ 393.43 Breakaway and emergency braking.

(a) *Towing vehicle protection system.* Every motor vehicle, if used to tow a trailer equipped with brakes, shall be equipped with a means for providing that in the case of a breakaway of the trailer, the service brakes on the towing vehicle will be capable of stopping the towing vehicle. For air braked towing units, the tractor protection valve or similar device shall operate automatically when the air pressure on the towing vehicle is between 138 kPa and 310 kPa (20 psi and 45 psi).

(b) *Emergency brake requirements, air brakes.* * * *

(c) *Emergency brake requirements, vacuum brakes.* * * *

(d) *Breakaway braking requirements for trailers.* Every trailer required to be equipped with brakes shall have brakes which apply automatically and immediately upon breakaway from the towing vehicle. With the exception of trailers having three or more axles, all brakes with which the trailer is required to be equipped must be applied upon breakaway from the towing vehicle. The brakes must remain in the applied position for at least 15 minutes.

(e) *Emergency valves.* * * *

(f) *Exception.* The requirements of paragraphs (b), (c) and (d) of this section shall not be applicable to commercial motor vehicles being transported in driveaway-towaway operations.

■ 25. Section 393.45 is revised to read as follows:

§ 393.45 Brake tubing and hoses; hose assemblies and end fittings.

(a) *General construction requirements for tubing and hoses, assemblies, and end fittings.* All brake tubing and hoses, brake hose assemblies, and brake hose end fittings must meet the applicable requirements of FMVSS No. 106 (49 CFR 571.106).

(b) *Brake tubing and hose installation.* Brake tubing and hose must—

(1) Be long and flexible enough to accommodate without damage all normal motions of the parts to which it is attached;

(2) Be secured against chaffing, kinking, or other mechanical damage; and

(3) Be installed in a manner that prevents it from contacting the vehicle's exhaust system or any other source of high temperatures.

(c) *Nonmetallic brake tubing.* Coiled nonmetallic brake tubing may be used for connections between towed and towing motor vehicles or between the frame of a towed vehicle and the unsprung subframe of an adjustable axle of the motor vehicle if—

(1) The coiled tubing has a straight segment (pigtail) at each end that is at least 51 mm (2 inches) in length and is encased in a spring guard or similar device which prevents the tubing from kinking at the fitting at which it is attached to the vehicle; and

(2) The spring guard or similar device has at least 51 mm (2 inches) of closed coils or similar surface at its interface with the fitting and extends at least 38 mm (1½ inches) into the coiled segment of the tubing from its straight segment.

(d) *Brake tubing and hose connections.* All connections for air, vacuum, or hydraulic braking systems shall be installed so as to ensure an attachment free of leaks, constrictions or other conditions which would adversely affect the performance of the brake system.

§ 393.46 [Removed]

■ 26. Section 393.46 is removed and reserved.

■ 27. Section 393.47 is revised to read as follows:

§ 393.47 Brake actuators, slack adjusters, linings/pads and drums/rotors.

(a) *General requirements.* Brake components must be constructed, installed and maintained to prevent excessive fading and grabbing. The means of attachment and physical characteristics must provide for safe and reliable stopping of the commercial motor vehicle.

(b) *Brake chambers.* The service brake chambers and spring brake chambers on each end of an axle must be the same size.

(c) *Slack adjusters.* The effective length of the slack adjuster on each end of an axle must be the same.

(d) *Linings and pads.* The thickness of the brake linings or pads shall meet the applicable requirements of this paragraph—

(1) *Steering axle brakes.* The brake lining/pad thickness on the steering axle of a truck, truck-tractor or bus shall not be less than 4.8 mm (3/16 inch) at the shoe center for a shoe with a continuous strip of lining; less than 6.4 mm (¼ inch) at the shoe center for a shoe with two pads; or worn to the wear indicator if the lining is so marked, for air drum brakes. The steering axle brake lining/pad thickness shall not be less than 3.2 mm (⅛ inch) for air disc brakes, or 1.6 mm (1/16 inch) or less for hydraulic disc, drum and electric brakes.

(2) *Non-steering axle brakes.* An air braked commercial motor vehicle shall not be operated with brake lining/pad thickness less than 6.4 mm (¼ inch) or to the wear indicator if the lining is so marked (measured at the shoe center for drum brakes); or less than 3.2 mm (⅛ inch) for disc brakes. Hydraulic or electric braked commercial motor vehicles shall not be operated with a lining/pad thickness less than 1.6 mm (1/16 inch) (measured at the shoe center) for disc or drum brakes.

(e) *Clamp and Roto-Chamber Brake Actuator Readjustment limits.* The pushrod travel for clamp and roto-chamber type actuators must be less than 80 percent of the rated strokes listed in SAE J1817—Long Stroke Air Brake Actuator Marking, July 2001 (See § 393.7 (b) for information on incorporation by reference and availability of this document), or 80 percent of the rated stroke marked on the brake chamber by the chamber manufacturer, or the readjustment limit marked on the brake chamber by the chamber manufacturer. The pushrod travel for Type 16 and 20 long stroke clamp type brake actuators must be less than 51 mm (2 inches) or 80 percent of the rated stroke marked on the brake chamber by the chamber manufacturer, or the readjustment limit marked on the brake chamber by the chamber manufacturer.

(f) *Wedge Brake Adjustment.* The movement of the scribe mark on the lining shall not exceed 1.6 mm (1/16 inch).

(g) *Drums and rotors.* The thickness of the drums or rotors shall not be less than the limits established by the brake drum or rotor manufacturer.

■ 28. Section 393.48 is revised to read as follows:

§ 393.48 Brakes to be operative.

(a) *General rule.* Except as provided in paragraphs (b) and (c) of this section, all brakes with which a commercial motor vehicle is equipped must be operable at all times.

(b) *Devices to reduce or remove front-wheel braking effort.* A commercial motor vehicle may be equipped with a device to reduce the front wheel braking effort (or in the case of a three-axle truck or truck tractor manufactured before March 1, 1975, a device to remove the front-wheel braking effort) if that device meets the applicable requirements of paragraphs (b)(1) and (2) of this section.

(1) *Manually operated devices.* Manually operated devices to reduce or remove front-wheel braking effort may only be used on buses, trucks, and truck tractors manufactured before March 1, 1975. Such devices must not be used unless the vehicle is being operated under adverse conditions such as wet, snowy, or icy roads.

(2) *Automatic devices.* Automatic devices must not reduce the front-wheel braking force by more than 50 percent of the braking force available when the automatic device is disconnected (regardless of whether or not an antilock system failure has occurred on any axle). The device must not be operable by the driver except upon application of the control that activates the braking system. The device must not be operable when the brake control application pressure exceeds 85 psig (for vehicles equipped with air brakes) or 85 percent of the maximum system pressure (for vehicles which are not equipped with air brakes).

(c) *Exception.* Paragraph (a) of this section does not apply to—

(1) A towed vehicle with disabling damage as defined in § 390.5;

(2) A vehicle which is towed in a driveaway-towaway operation and is included in the exemption to the requirement for brakes on all wheels, § 393.42(b);

(3) Unladen converter dollies with a gross weight of 1,361 kg (3,000 lbs) or less, and manufactured prior to March 1, 1998;

(4) The steering axle of a three-axle dolly which is steered by a co-driver;

(5) Loaded house moving dollies, specialized trailers and dollies used to transport industrial furnaces, reactors, and similar motor vehicles provided the speed at which the combination of vehicles will be operated does not exceed 32 km/hour (20 mph) and brakes on the combination of vehicles are capable of stopping the combination within 12.2 meters (40 feet) from the speed at which the vehicle is being operated or 32 km/hour (20 mph), whichever is less.

(6) Raised lift axles. Brakes on lift axles need not be capable of being operated while the lift axle is raised. However, brakes on lift axles must be capable of being applied whenever the lift axle is lowered and the tires contact the roadway.

■ 29. Section 393.50 is revised to read as follows:

§ 393.50 Reservoirs required.

(a) *Reservoir capacity for air-braked power units manufactured on or after March 1, 1975, and air-braked trailers manufactured on or after January 1, 1975.* Buses, trucks, and truck-tractors manufactured on or after March 1, 1975, and air-braked trailers manufactured on or after January 1, 1975, must meet the reservoir requirements of FMVSS No. 121, S5.1.2, in effect on the date of manufacture.

(b) *Reservoir capacity for air-braked vehicles not subject to FMVSS No. 121 on the date of manufacture and all vacuum braked vehicles.* Each motor vehicle using air or vacuum braking must have either reserve capacity, or a reservoir, that would enable the driver to make a full service brake application with the engine stopped without depleting the air pressure or vacuum below 70 percent of that indicated by the air or vacuum gauge immediately before the brake application is made. For the purposes of this paragraph, a full service brake application means depressing the brake pedal or treadle valve to the limit of its travel.

(c) *Safeguarding of air and vacuum.* Each service reservoir system on a motor vehicle shall be protected against a loss of air pressure or vacuum due to a failure or leakage in the system between the service reservoir and the source of air pressure or vacuum, by check valves or equivalent devices whose proper functioning can be checked without disconnecting any air or vacuum line, or fitting.

(d) *Drain valves for air braked vehicles.* Each reservoir must have a condensate drain valve that can be manually operated. Automatic condensate drain valves may be used provided (1) they may be operated manually, or (2) a manual means of draining the reservoirs is retained.

■ 30. Section 393.51 is revised to read as follows:

§ 393.51 Warning signals, air pressure and vacuum gauges.

(a) *General Rule.* Every bus, truck and truck tractor, except as provided in paragraph (f), must be equipped with a signal that provides a warning to the driver when a failure occurs in the vehicle's service brake system. The warning signal must meet the applicable requirements of paragraphs (b), (c), (d) or (e) of this section.

(b) *Hydraulic brakes.* Vehicles manufactured on or after September 1, 1975, must meet the brake system indicator lamp requirements of FMVSS No. 571.105 (S5.3) applicable to the vehicle on the date of manufacture. Vehicles manufactured on or after July 1, 1973 but before September 1, 1975, or to which FMVSS No. 571.105 was not applicable on the date of manufacture, must have a warning signal which operates before or upon application of the brakes in the event of a hydraulic-type complete failure of a partial system. The signal must be either visible within the driver's forward field of view or audible. The signal must be continuous. (NOTE: FMVSS No. 105 was applicable to trucks and buses from September 1, 1975 to October 12, 1976, and from September 1, 1983, to the present. FMVSS No. 105 was not applicable to trucks and buses manufactured between October 12, 1976, and September 1, 1983. Motor carriers have the option of equipping those vehicles to meet either the indicator lamp requirements of FMVSS No. 105, or the indicator lamp requirements specified in this paragraph for vehicles which were not subject to FMVSS No. 105 on the date of manufacture.)

(c) *Air brakes.* A commercial motor vehicle (regardless of the date of manufacture) equipped with service brakes activated by compressed air (air brakes) or a commercial motor vehicle towing a vehicle with service brakes activated by compressed air (air brakes) must be equipped with a pressure gauge and a warning signal. Trucks, truck tractors, and buses manufactured on or after March 1, 1975, must, at a minimum, have a pressure gauge and a warning signal which meets the requirements of FMVSS No. 121 (S5.1.4 for the pressure gauge and S5.1.5 for the warning signal) applicable to the vehicle on the date of manufacture of the vehicle. Power units to which FMVSS No. 571.121 was not applicable on the date of manufacture of the vehicle must be equipped with—

(1) A pressure gauge, visible to a person seated in the normal driving position, which indicates the air pressure (in kilopascals (kPa) or pounds per square inch (psi)) available for braking; and

(2) A warning signal that is audible or visible to a person in the normal driving position and provides a continuous warning to the driver whenever the air pressure in the service reservoir system is at 379 kPa (55 psi) and below, or one-half of the compressor governor cutout pressure, whichever is less.

(d) *Vacuum brakes.* A commercial motor vehicle (regardless of the date it was manufactured) having service brakes activated by vacuum or a vehicle towing a vehicle having service brakes activated by vacuum must be equipped with—

(1) A vacuum gauge, visible to a person seated in the normal driving position, which indicates the vacuum (in millimeters or inches of mercury) available for braking; and

(2) A warning signal that is audible or visible to a person in the normal driving position and provides a continuous warning to the driver whenever the vacuum in the vehicle's supply reservoir is less than 203 mm (8 inches) of mercury.

(e) *Hydraulic brakes applied or assisted by air or vacuum.* Each vehicle equipped with hydraulically activated service brakes which are applied or assisted by compressed air or vacuum, and to which FMVSS No. 105 was not applicable on the date of manufacture, must be equipped with a warning signal that conforms to paragraph (b) of this section for the hydraulic portion of the system; paragraph (c) of this section for the air assist/air applied portion; or paragraph (d) of this section for the vacuum assist/vacuum applied portion. This paragraph shall not be construed as requiring air pressure gauges or vacuum gauges, only warning signals.

(f) *Exceptions.* The rules in paragraphs (c), (d) and (e) of this section do not apply to property carrying commercial motor vehicles which have less than three axles and (1) were manufactured before July 1, 1973, and (2) have a manufacturer's gross vehicle weight rating less than 4,536 kg (10,001 pounds).

■ 31. Section 393.61 is revised to read as follows:

§ 393.61 Truck and truck tractor window construction.

Each truck and truck tractor (except trucks engaged in armored car service) shall have at least one window on each side of the driver's compartment. Each window must have a minimum area of 1,290 cm^2 (200 in^2) formed by a rectangle 33 cm by 45 cm (13 inches by 17¾ inches). The maximum radius of the corner arcs shall not exceed 152 mm (6 inches). The long axis of the rectangle shall not make an angle of more than 45 degrees with the surface on which the unladen vehicle stands. If the cab is designed with a folding door or doors or with clear openings where doors or windows are customarily located, no windows shall be required in those locations.

■ 32. Section 393.62 is revised to read as follows:

§ 393.62 Emergency exits for buses.

(a) *Buses manufactured on or after September 1, 1994.* Each bus with a

GVWR of 4,536 kg (10,000 pounds) or less must meet the emergency exit requirements of FMVSS No. 217 (S5.2.2.3) in effect on the date of manufacture. Each bus with a GVWR of more than 4,536 kg (10,000 pounds) must have emergency exits which meet the applicable emergency exit requirements of FMVSS No. 217 (S5.2.2 or S5.2.3) in effect on the date of manufacture.

(b) Buses manufactured on or after September 1, 1973, but before September 1, 1994. (1) Each bus (including a school bus used in interstate commerce for non-school bus operations) with a GVWR of more than 4,536 kg (10,000 lbs) must meet the requirements of FMVSS No. 217, S5.2.2 in effect on the date of manufacture.

(2) Each bus (including a school bus used in interstate commerce for non-school bus operations) with a GVWR of 4,536 kg (10,000 lbs) or less must meet the requirements of FMVSS No. 217, S5.2.2.3 in effect on the date of manufacture.

(c) *Buses manufactured before September 1, 1973.* For each seated passenger space provided, inclusive of the driver there shall be at least 432 cm^2 (67 square inches) of glazing if such glazing is not contained in a push-out window; or, at least 432 cm^2 (67 square inches) of free opening resulting from opening of a push-out type window. No area shall be included in this minimum prescribed area unless it will provide an unobstructed opening of at least 1,290 cm^2 (200 in^2) formed by a rectangle 33 cm by 45 cm (13 inches by 17¾ inches). The maximum radius of the corner arcs shall not exceed 152 mm (6 inches). The long axis of the rectangle shall not make an angle of more than 45 degrees with the surface on which the unladen vehicle stands. The area shall be measured either by removal of the glazing if not of the push-out type, or of the movable sash if of the push-out type. The exit must comply with paragraph (d) of this section. Each side of the bus must have at least 40 percent of emergency exit space required by this paragraph.

(d) *Laminated safety glass/push-out window requirements for buses manufactured before September 1, 1973.* Emergency exit space used to satisfy the requirements of paragraph (c) of this section must have laminated safety glass or push-out windows designed and maintained to yield outward to provide a free opening.

(1) *Safety glass.* Laminated safety glass must meet Test No. 25, Egress, of American National Standard for Safety Glazing Materials for Glazing Motor Vehicles and Motor Vehicle Equipment Operating on Land Highways—Safety Standards ANSI/SAE Z26.1/96, August 1997. (See § 393.7 (b) for information on incorporation by reference and availability of this document.)

(2) *Push-out windows.* Each push-out window shall be releasable by operating no more than two mechanisms and allow manual release of the exit by a single occupant. For mechanisms which require rotary or straight (parallel to the undisturbed exit surface) motions to operate the exit, no more than 89 Newtons (20 pounds) of force shall be required to release the exit. For exits which require a straight motion perpendicular to the undisturbed exit surface, no more than 267 Newtons (60 pounds) shall be required to release the exit.

(e) *Emergency exit identification.* Each bus and each school bus used in interstate commerce for non-school bus operations, manufactured on or after September 1, 1973, shall meet the applicable emergency exit identification or marking requirements of FMVSS No. 217, S5.5, in effect on the date of manufacture. The emergency exits and doors on all buses (including school buses used in interstate commerce for non-school bus operations) must be marked ''Emergency Exit'' or ''Emergency Door'' followed by concise operating instructions describing each motion necessary to unlatch or open the exit located within 152 mm (6 inches) of the release mechanism.

(f) *Exception for the transportation of prisoners.* The requirements of this section do not apply to buses used exclusively for the transportation of prisoners.

§ 393.63 [Removed]

■ 33. Section 393.63 is removed and reserved.

■ 34. Section 393.67 is amended by removing the footnote to paragraphs (d) and (e); by revising the introductory text of paragraphs (a), (d), and (e); and by revising paragraph (f)(2) to read as follows:

§ 393.67 Liquid fuel tanks.

(a) *Application of the rules in this section.* The rules in this section apply to tanks containing or supplying fuel for the operation of commercial motor vehicles or for the operation of auxiliary equipment installed on, or used in connection with commercial motor vehicles.

* * * * *

(d) *Liquid fuel tank tests.* Each liquid fuel tank must be capable of passing the tests specified in paragraphs (d)(1) and (2) of this section. The specified tests are a measure of performance only. Alternative procedures which assure that equipment meets the required performance standards may be used.

* * * * *

(e) *Side-mounted liquid fuel tank tests.* Each side-mounted liquid fuel tank must be capable of passing the tests specified in paragraphs (e)(1) and (2) of this section and the test specified in paragraphs (d)(1) and (2) of this section. The specified tests are a measure of performance only. Alternative procedures which assure that equipment meets the required performance criteria may be used.

* * * * *

(f) * * *

(2) The manufacturer's name on tanks manufactured on and after July 1, 1989, and means of identifying the facility at which the tank was manufactured, and

* * * * *

■ 35. Section 393.68 is added to part 393 and reads as follows:

§ 393.68 Compressed natural gas fuel containers.

(a) *Applicability.* The rules in this section apply to compressed natural gas (CNG) fuel containers used for supplying fuel for the operation of commercial motor vehicles or for the operation of auxiliary equipment installed on, or used in connection with commercial motor vehicles.

(b) *CNG containers manufactured on or after March 26, 1995.* Any motor vehicle manufactured on or after March 26, 1995, and equipped with a CNG fuel tank must meet the CNG container requirements of FMVSS No. 304 (49 CFR 571.304) in effect at the time of manufacture of the vehicle.

(c) *Labeling.* Each CNG fuel container shall be permanently labeled in accordance with the requirements of FMVSS No. 304, S7.4.

■ 36. Section 393.70 is amended by revising paragraph (d)(8) to read as follows:

§ 393.70 Coupling devices and towing methods, except for driveaway-towaway operation.

(d) * * *

(8)(i) When two safety devices, including two safety chains or cables, are used and are attached to the towing vehicle at separate points, the points of attachment on the towing vehicle shall be located equally distant from, and on opposite sides of, the longitudinal centerline of the towing vehicle.

(ii) Where two chains or cables are attached to the same point on the towing vehicle, and where a bridle or a single chain or cable is used, the point

of attachment must be on the longitudinal centerline or within 152 mm (6 inches) to the right of the longitudinal centerline of the towing vehicle.

(iii) A single safety device, other than a chain or cable, must also be attached to the towing vehicle at a point on the longitudinal centerline or within 152 mm (6 inches) to the right of the longitudinal centerline of the towing vehicle.

■ 37. Section 393.71 is amended by revising paragraphs (a)(2) and (g) and by adding paragraph (b)(3):

§ 393.71 Coupling devices and towing methods, driveaway-towaway operations.

(a) * * *

(2) No more than one tow-bar or ball-and-socket type coupling device may be used in any combination.

* * * * *

(b) *Carrying vehicles on towing vehicles, and multiple saddle-mounts.*

* * * * *

(3) Saddle-mounted vehicles must be arranged such that the gross weight of the vehicles is properly distributed to prevent undue interference with the steering, braking, or maneuvering of the combination of vehicles.

* * * * *

(g) *Means required for towing.* No motor vehicles or combination of motor vehicles shall be towed in driveaway-towaway operations by means other than a tow-bar, ball-and-socket type coupling device, saddle-mount connections which meet the requirements of this section, or in the case of a semi-trailer equipped with an upper coupler assembly, a fifth-wheel meeting the requirements of § 393.70.

* * * * *

■ 38. Section 393.75 is amended by revising paragraph (e) to read as follows:

§ 393.75 Tires.

* * * * *

(e) A regrooved tire with a load-carrying capacity equal to or greater than 2,232 kg (4,920 pounds) shall not be used on the front wheels of any truck or truck tractor.

* * * * *

■ 39. Section 393.78 is revised to read as follows:

§ 393.78 Windshield wiping and washing systems.

(a) *Vehicles manufactured on or after December 25, 1968.* Each bus, truck, and truck-tractor manufactured on or after December 25, 1968, must have a windshield wiping system that meets the requirements of FMVSS No. 104 (S4.1) in effect on the date of manufacture. Each of these vehicles must have a windshield washing system that meets the requirements of FMVSS No. 104 (S4.2.2) in effect on the date of manufacture.

(b) *Vehicles manufactured between June 30, 1953, and December 24, 1968.* Each truck, truck-tractor, and bus manufactured between June 30, 1953, and December 24, 1968, shall be equipped with a power-driven windshield wiping system with at least two wiper blades, one on each side of the centerline of the windshield. Motor vehicles which depend upon vacuum to operate the windshield wipers, shall have the wiper system constructed and maintained such that the performance of the wipers will not be adversely affected by a change in the intake manifold pressure.

(c) *Driveaway-towaway operations.* Windshield wiping and washing systems need not be in working condition while a commercial motor vehicle is being towed in a driveaway-towaway operation.

■ 40. Section 393.79 is revised to read as follows:

§ 393.79 Windshield defrosting and defogging systems.

(a) *Vehicles manufactured on or after December 25, 1968.* Each bus, truck, and truck-tractor manufactured on or after December 25, 1968, must have a windshield defrosting and defogging system that meets the requirements of FMVSS No. 103 in effect on the date of manufacture.

(b) *Vehicles manufactured before December 25, 1968.* Each bus, truck, and truck-tractor shall be equipped with a means for preventing the accumulation of ice, snow, frost, or condensation that could obstruct the driver's view through the windshield while the vehicle is being driven.

■ 41. Section 393.82 is revised to read as follows:

§ 393.82 Speedometer.

Each bus, truck, and truck-tractor must be equipped with a speedometer indicating vehicle speed in miles per hour and/or kilometers per hour. The speedometer must be accurate to within plus or minus 8 km/hr (5 mph) at a speed of 80 km/hr (50 mph).

■ 42. Section 393.87 is revised to read as follows:

§ 393.87 Warning flags on projecting loads.

(a) Any commercial motor vehicle transporting a load which extends beyond the sides by more than 102 mm (4 inches) or more than 1,219 mm (4 feet) beyond the rear must have the extremities of the load marked with red or orange fluorescent warning flags. Each warning flag must be at least 457 mm (18 inches) square.

(b) *Position of flags.* There must be a single flag at the extreme rear if the projecting load is two feet wide or less. Two warning flags are required if the projecting load is wider than two feet. Flags must be located to indicate maximum width of loads which extend beyond the sides and/or rear of the vehicle.

§ 393.92 [Removed]

■ 43. Section 393.92 is removed and reserved.

■ 44. Section 393.94 is amended revising the section heading, by removing paragraph (d) and the footnote to paragraph (c), and by revising paragraphs (a) and (c)(4) to read as follows:

§ 393.94 Interior noise levels in power units.

(a) *Applicability of this section.* The interior noise level requirements apply to all trucks, truck-tractors, and buses.

* * * * *

(c)(4) The sound level meters used to determine compliance with the requirements of this section must meet the American National Standards Institute *''Specification for Sound Level Meters,''* ANSI S1.4—1983. (See § 393.7(b) for information on the incorporation by reference and availability of this document.)

* * * * *

■ 45. Section 393.95 is amended by revising the introductory text; by removing and reserving paragraphs (c), (h) and (i); and by revising paragraphs (a), (b) and (f) to read as follows:

§ 393.95 Emergency equipment on all power units.

Each truck, truck tractor, and bus (except those towed in driveaway-towaway operations) must be equipped as follows:

(a) *Fire Extinguishers.*

(1) *Minimum ratings:* (i) A power unit that is used to transport hazardous materials in a quantity that requires placarding (See § 177.823 of this title) must be equipped with a fire extinguisher having an Underwriters' Laboratories rating of 10 B:C or more.

(ii) A power unit that is not used to transport hazardous materials must be equipped with either:

(A) A fire extinguisher having an Underwriters' Laboratories rating of 5 B:C or more; or

(B) Two fire extinguishers, each of which has an Underwriters' Laboratories rating of 4 B:C or more.

(2) *Labeling and marking.* Each fire extinguisher required by this section must be labeled or marked by the manufacturer with its Underwriters' Laboratories rating.

(3) *Visual Indicators.* The fire extinguisher must be designed, constructed, and maintained to permit visual determination of whether it is fully charged.

(4) *Condition, location, and mounting.* The fire extinguisher(s) must be filled and located so that it is readily accessible for use. The extinguisher(s) must be securely mounted to prevent sliding, rolling, or vertical movement relative to the motor vehicle.

(5) *Extinguishing agents.* The fire extinguisher must use an extinguishing agent that does not need protection from freezing. Extinguishing agents must comply with the toxicity provisions of the Environmental Protection Agency's Significant New Alternatives Policy (SNAP) regulations under 40 CFR Part 82, Subpart G.

(b) *Spare fuses.* Power units for which fuses are needed to operate any required parts and accessories must have at least one spare fuse for each type/size of fuse needed for those parts and accessories.

* * * * *

(f) *Warning devices for stopped vehicles.* Except as provided in paragraph (g) of this section, one of the following options must be used:

(1) Three bidirectional emergency reflective triangles that conform to the requirements of Federal Motor Vehicle Safety Standard No. 125, § 571.125 of this title; or

(2) At least 6 fusees or 3 liquid-burning flares. The vehicle must have as many additional fusees or liquid-burning flares as are necessary to satisfy the requirements of § 392.22.

(3) Other warning devices may be used in addition to, but not in lieu of, the required warning devices, provided those warning devices do not decrease the effectiveness of the required warning devices.

* * * * *

■ 46. Section 393.201 is amended by removing paragraph (f) and by revising paragraphs (a) and (d) to read as follows:

§ 393.201 Frames.

(a) The frame or chassis of each commercial motor vehicle shall not be cracked, loose, sagging or broken.

* * * * *

(d) Parts and accessories shall not be welded to the frame or chassis of a commercial motor vehicle except in accordance with the vehicle manufacturer's recommendations. Any welded repair of the frame must also be in accordance with the vehicle manufacturer's recommendations.

* * * * *

■ 47. Section 393.207 is amended by adding paragraph (g) to read as follows:

§ 393.207 Suspension systems.

* * * * *

(g) *Air suspension exhaust controls.* The air suspension exhaust controls must not have the capability to exhaust air from the suspension system of one axle of a two-axle air suspension trailer unless the controls are either located on the trailer, or the power unit and trailer combination are not capable of traveling at a speed greater than 10 miles per hour while the air is exhausted from the suspension system. This paragraph shall not be construed to prohibit—

(1) Devices that could exhaust air from both axle systems simultaneously; or

(2) Lift axles on multi-axle units.

■ 48. Section 393.209 is amended by revising paragraph (b) and the first sentence of paragraph (d) to read as follows:

§ 393.209 Steering wheel systems.

* * * * *

(b) *Steering wheel lash.* (1) The steering wheel lash shall not exceed the following parameters:

Steering wheel diameter	Manual steering system	Power steering system
406 mm or less (16 inches or less)	51 mm (2 inches)	108 mm (4¼ inches).
457 mm (18 inches)	57 mm (2¼ inches)	121 mm (4¾ inches).
483 mm (19 inches)	60 mm (2⅜ inches)	127 mm (5 inches).
508 mm (20 inches)	64 mm (2½ inches)	133 mm (5¼ inches).
533 mm (21 inches)	67 mm (2⅝ inches)	140 mm (5½ inches).
559 mm (22 inches)	70 mm (2¾ inches)	146 mm (5¾ inches).

(2) For steering wheel diameters not listed in paragraph (b)(1) of this section the steering wheel lash shall not exceed 14 degrees angular rotation for manual steering systems, and 30 degrees angular rotation for power steering systems.

* * * * *

(d) *Steering system.* Universal joints and ball-and-socket joints shall not be worn, faulty or repaired by welding.

* * *

* * * * *

[FR Doc. 05–14259 Filed 8–12–05; 8:45 am]

BILLING CODE 4910–EX–P

Reader Aids

Federal Register

Vol. 70, No. 156

Monday, August 15, 2005

CUSTOMER SERVICE AND INFORMATION

Federal Register/Code of Federal Regulations	
General Information, indexes and other finding aids	**202–741–6000**
Laws	**741–6000**
Presidential Documents	
Executive orders and proclamations	**741–6000**
The United States Government Manual	**741–6000**
Other Services	
Electronic and on-line services (voice)	**741–6020**
Privacy Act Compilation	**741–6064**
Public Laws Update Service (numbers, dates, etc.)	**741–6043**
TTY for the deaf-and-hard-of-hearing	**741–6086**

ELECTRONIC RESEARCH

World Wide Web

Full text of the daily Federal Register, CFR and other publications is located at: **http://www.gpoaccess.gov/nara/index.html**

Federal Register information and research tools, including Public Inspection List, indexes, and links to GPO Access are located at: **http://www.archives.gov/federal__register/**

E-mail

FEDREGTOC-L (Federal Register Table of Contents LISTSERV) is an open e-mail service that provides subscribers with a digital form of the Federal Register Table of Contents. The digital form of the Federal Register Table of Contents includes HTML and PDF links to the full text of each document.

To join or leave, go to **http://listserv.access.gpo.gov** and select *Online mailing list archives, FEDREGTOC-L, Join or leave the list (or change settings);* then follow the instructions.

PENS (Public Law Electronic Notification Service) is an e-mail service that notifies subscribers of recently enacted laws.

To subscribe, go to **http://listserv.gsa.gov/archives/publaws-l.html** and select *Join or leave the list (or change settings);* then follow the instructions.

FEDREGTOC-L and **PENS** are mailing lists only. We cannot respond to specific inquiries.

Reference questions. Send questions and comments about the Federal Register system to: **fedreg.info@nara.gov**

The Federal Register staff cannot interpret specific documents or regulations.

FEDERAL REGISTER PAGES AND DATE, AUGUST

44041–44218 1
44219–44462 2
44463–44846 3
44847–45272 4
45273–45522 5
45523–46064 8
46065–46402 9
46403–46740 10
46741–47076 11
47077–47710 12
47711–48056 15

CFR PARTS AFFECTED DURING AUGUST

At the end of each month, the Office of the Federal Register publishes separately a List of CFR Sections Affected (LSA), which lists parts and sections affected by documents published since the revision date of each title.

3 CFR

Proclamations:
7916 46401
Executive Orders:
13222 (See Notice of August 2, 2005) 45273
Administrative Orders:
Memorandums:
Memorandum of July 4, 2005 44041
Memorandums of July 30, 2005 46741
Memorandum of August 5, 2005.....46397
Presidential Determination:
No. 2005-31 of August 2, 2005 46395
Notices:
Notice of August 2, 2005 45273

5 CFR

213 44219
315 44219
337 44847
370 47711
576 46065
Proposed Rules:
591 44976
2634 47138

7 CFR

1 47077
247 47052
301 .....44222, 45523, 46065
400 44222
916 44243
917 44243
923 44249
946 44252
996 44043
Proposed Rules:
82 44525
762 .....46779, 47730
1755 45314

9 CFR

77 47078
78 47078
Proposed Rules:
3 45322
304 47147
308 47147
310 47147
320 47147
327 47147
381 47147
416 47147
417 47147

10 CFR

110 46066
170 46265
171 46265
1303 47079
Proposed Rules:
20 45571
32 45571
51 47148
150 45571

12 CFR

11 46403
25 44256
226 46066
228 44256
229 47085
335 44270
345 44256
Proposed Rules:
Ch. I 46779
Ch. II 46779
Ch. III 46779
Ch. V 46779
4 45323
19 45323
263 45323
264a 45323
308 45323
330 45571
336 45323
363 44293
507 45323
509 45323

13 CFR

Ch. III 47002, 47049

14 CFR

23 .....44463, 45275
36 45502
39 .....44046, 44273, 44274, 44276, 45526, 46067, 46069, 46072, 46074, 46076, 46743, 46747, 46752, 46754, 47086, 47716, 47720, 47722
61 45264
71 .....44465, 45275, 45527, 46078, 46754
73 .....44466, 45528
95 44278
97 47090
257 44848
1260 46079
Proposed Rules:
25 .....46099, 46100, 46102, 46104, 46106, 46108, 46110, 46112, 46113, 46115, 46785
39 .....44297, 45581, 45585, 45587, 45590, 45592, 45595, 46437, 43439, 46788, 46790
71 .....44300, 44533, 44868, 44869, 45599
93 45250

15 CFR

4 47725
738 45276
740 45276
745 45276
772 45276
774 45276

16 CFR

Proposed Rules:
803 47733

17 CFR

200 44722
228 ....44722, 46080
229 ....44722, 46080
230 44722
239 44722
240 ....44722, 46080, 46089
242 45529
243 44722
249 44722
274 44722

18 CFR

35 47093

19 CFR

Proposed Rules:
101 47151
351 47738

20 CFR

Proposed Rules:

404 46792
416 46792

21 CFR

520 44048
524 44719
556 44048
558 44049
1301 47094

22 CFR

Proposed Rules:
62 47152

24 CFR

Proposed Rules:
200 45492
206 45498
290 45492

25 CFR

542 47097

26 CFR

1 ....44467, 45529, 45530, 46758, 47108, 47109
54 47109

Proposed Rules:
1 ....44535, 47155
41 47160
48 47160
145 47160

27 CFR

Proposed Rules:
9 47740

29 CFR

1601 ....47127, 47128
4022 47725
4044 47725

Proposed Rules:
1910 44074

30 CFR

5 46336
15 46336
18 46336
19 46336
20 46336
22 46336
23 46336
27 46336
28 46336
33 46336
35 46336
36 46336

Proposed Rules:
5 46345
15 46345
18 46345
19 46345
20 46345
22 46345
23 46345
27 46345
28 46345
33 46345
35 46345
36 46345

32 CFR

706 ....46758, 46759, 46761, 46762, 46763, 46765, 46766
806b 46405

Proposed Rules:
174 46116
175 46116
176 46116
581 44536

33 CFR

100 ....44470, 45531, 46405
117 ....44852, 45534, 45535, 45536
165 ....44470, 45531, 45537, 46407

Proposed Rules:
100 47160
110 45607
117 46441

36 CFR

242 46768
1191 45283

Proposed Rules:
111 47754
242 46795
1011 44870
1260 47161

37 CFR

201 44049

Proposed Rules:
202 44878

40 CFR

51 44470
52 ....44052, 44055, 44478, 44481, 44852, 44855, 45539, 45542, 46090, 46770, 46772
62 46773
63 ....44285, 46684
81 44470
180 ....44483, 44488, 44492, 44857, 46410, 46419, 46428, 46706
258 44150
260 45508
261 ....44150, 44496, 45508
264 ....44150, 45508
265 45508
268 ....44505, 45508
270 45508
273 45508
300 44063

Proposed Rules:
Ch. I 46444
26 46448
51 44154
52 ....44075, 44537, 45607, 46126, 46127, 46448, 46798, 47757
60 45608
62 46798
63 ....45608, 46452, 46701
180 45625
271 46799
300 ....44076, 45334
420 46459

42 CFR

405 47278
409 45026
411 45026
412 ....47278, 47880
413 47278
415 47278
418 45130
419 47278
422 47278
424 45026
485 47278
489 45026

Proposed Rules:
402 44879
405 45764
410 45764
411 45764
413 45764
414 45764
426 45764
483 47759

43 CFR

39 44512
1820 45312

44 CFR

67 ....47128, 47129

Proposed Rules:
67 47166

45 CFR

1611 45545

46 CFR

501 44866
502 44866

Proposed Rules:
389 47771
531 45626

47 CFR

2 46576
25 46576
73 ....44513, 44514, 44515, 44516, 44517, 44518, 44519, 44520, 46576
90 46576
97 46576

Proposed Rules:
1 44537
73 ....44537, 44542, 44543

48 CFR

52 46776

Proposed Rules:
204 46807
235 46807
246 44077
252 ....44077, 46807

49 CFR

390 48008
392 48008
393 48008
541 46092
551 45565
571 ....44520, 46431, 47131
586 46431

Proposed Rules:
571 46807

50 CFR

17 ....46304, 46366, 46924
100 46768
229 44289
648 ....44066, 44291
660 ....44069, 44070, 44072, 47727
679 ....44523, 46097, 46098, 46436, 46776, 46777, 47728

Proposed Rules:
17 ....44078, 44301, 44544, 44547, 46387, 46465, 46467
20 ....44200, 45336
100 46795
300 47774
600 47777
648 45628
660 ....47777, 47781, 47782
679 45638

REMINDERS

The items in this list were editorially compiled as an aid to Federal Register users. Inclusion or exclusion from this list has no legal significance.

RULES GOING INTO EFFECT AUGUST 15, 2005

AGRICULTURE DEPARTMENT

Practice and procedure:
- Audits of States, local governments and non-profit organizations; published 6-16-05

COMMERCE DEPARTMENT

Disclosure of Government information; change in designated official; published 8-15-05

ENERGY DEPARTMENT

Federal Energy Regulatory Commission

Electric utilities (Federal Power Act):
- Generator interconnection agreements and procedures; large wind generation; published 6-16-05

Oil pipeline companies (Interstate Commerce Act):
- Data filing instructions; published 6-14-05

ENVIRONMENTAL PROTECTION AGENCY

Air pollutants, hazardous; national emission standards:
- Asphalt processing and roofing manufacturing; published 5-17-05

Air pollution control; new motor vehicles and engines:
- Heavy-duty diesel engines and vehicles; in-use emissions testing; published 6-14-05

FEDERAL COMMUNICATIONS COMMISSION

Radio stations; table of assignments:
- Louisiana and Texas; published 7-20-05

HOMELAND SECURITY DEPARTMENT

Coast Guard

Drawbridge operations:
- New York; published 8-8-05

Ports and waterways safety; regulated navigation areas, safety zones, security zones, etc.:
- Delaware River, PA; published 7-15-05

TRANSPORTATION DEPARTMENT

Federal Aviation Administration

Airworthiness directives:
- Boeing; published 7-11-05
- Empresa Brasileira de Aeronautica, S.A. (EMBRAER); published 7-11-05

TREASURY DEPARTMENT

Fiscal Service

Securities, U.S. Treasury:
- State and Local Government Series; published 6-30-05

COMMENTS DUE NEXT WEEK

AGRICULTURE DEPARTMENT

Agricultural Marketing Service

Almonds grown in—
- California; comments due by 8-26-05; published 6-27-05 [FR 05-12623]

Apricots grown in—
- Washington; comments due by 8-26-05; published 6-27-05 [FR 05-12620]

Avocados grown in—
- Florida; comments due by 8-23-05; published 6-24-05 [FR 05-12616]

Cotton classing, testing and standards:
- Classification services to growers; 2004 user fees; Open for comments until further notice; published 5-28-04 [FR 04-12138]

Potatoes (Irish) grown in—
- Colorado; comments due by 8-26-05; published 6-27-05 [FR 05-12619]

AGRICULTURE DEPARTMENT

Forest Service

Oil and gas operations:
- Onshore Federal and Indian oil and gas leases; approval of operations (Order No.1); comments due by 8-26-05; published 7-27-05 [FR 05-14103]

AGRICULTURE DEPARTMENT

Farm Service Agency

Special programs:
- Interest Assistance Program; comments due by 8-22-05; published 6-22-05 [FR 05-12316]

AGRICULTURE DEPARTMENT

Natural Resources Conservation Service

Reports and guidance documents; availability, etc.:
- National Handbook of Conservation Practices; Open for comments until further notice; published 5-9-05 [FR 05-09150]

COMMERCE DEPARTMENT

Industry and Security Bureau

Chemical Weapons Convention Regulations:
- Small business entities; economic impact; comments due by 8-22-05; published 7-21-05 [FR 05-14441]

COMMERCE DEPARTMENT

National Oceanic and Atmospheric Administration

Fishery conservation and management:
- Caribbean, Gulf, and South Atlantic fisheries—
  - Gulf grouper; comments due by 8-24-05; published 7-25-05 [FR 05-14604]
- Magnuson-Stevens Act provisions—
  - National standard guidelines; comments due by 8-22-05; published 6-22-05 [FR 05-11978]

Marine mammals:
- Commercial fishing authorizations; incidental taking—
  - Atlantic Large Whale Take Reduction Plan; comments due by 8-22-05; published 7-13-05 [FR 05-13795]
- Taking and importation—
  - BP Exploration; Beaufort Sea, AK; offshore oil and gas facilities; construction and operation; comments due by 8-24-05; published 7-25-05 [FR 05-14620]

COMMERCE DEPARTMENT

Patent and Trademark Office

Practice and procedure:
- Chemical and three-dimensional biological structural data in electronic format; acceptance, processing, use and dissemination; comments due by 8-22-05; published 6-21-05 [FR 05-12199]
- Patent search fee refund provision changes; implementation; comments due by 8-22-05; published 6-21-05 [FR 05-12198]

CONSUMER PRODUCT SAFETY COMMISSION

Flammable Fabrics Act:
- Mattresses and Mattress and foundation sets; flammability (open flame) standard; comments due by 8-22-05; published 6-23-05 [FR 05-12387]

COURT SERVICES AND OFFENDER SUPERVISION AGENCY FOR THE DISTRICT OF COLUMBIA

Semi-annual agenda; Open for comments until further notice; published 12-22-03 [FR 03-25121]

DEFENSE DEPARTMENT

Acquisition regulations:
- Combating trafficking in persons; comments due by 8-22-05; published 6-21-05 [FR 05-12099]
- Construction contracting; comments due by 8-22-05; published 6-21-05 [FR 05-12096]
- Contractor insurance/pension reviews; comments due by 8-22-05; published 6-21-05 [FR 05-12097]
- Describing agency needs; comments due by 8-22-05; published 6-21-05 [FR 05-12098]
- Pilot Mentor-Protege Program; Open for comments until further notice; published 12-15-04 [FR 04-27351]

Federal Acquisition Regulation (FAR):
- Past performance evaluation of orders; comments due by 8-22-05; published 6-21-05 [FR 05-12183]

EDUCATION DEPARTMENT

Grants and cooperative agreements; availability, etc.:
- Vocational and adult education—
  - Smaller Learning Communities Program; Open for comments until further notice; published 2-25-05 [FR E5-00767]

ENERGY DEPARTMENT

Meetings:
- Environmental Management Site-Specific Advisory Board—
  - Oak Ridge Reservation, TN; Open for comments until further notice; published 11-19-04 [FR 04-25693]

ENERGY DEPARTMENT

Energy Efficiency and Renewable Energy Office

Commercial and industrial equipment; energy efficiency program:
- Test procedures and efficiency standards—

Commercial packaged boilers; Open for comments until further notice; published 10-21-04 [FR 04-17730]

ENERGY DEPARTMENT

Federal Energy Regulatory Commission

Electric rate and corporate regulation filings:
Virginia Electric & Power Co. et al.; Open for comments until further notice; published 10-1-03 [FR 03-24818]

Electric utilities (Federal Power Act):
Public utilities including regional transmission organizations; accounting and financial reporting requirements; comments due by 8-26-05; published 6-27-05 [FR 05-12626]

ENVIRONMENTAL PROTECTION AGENCY

Air quality implementation plans; approval and promulgation; various States:
Indiana; comments due by 8-24-05; published 7-25-05 [FR 05-14600]
New Jersey; comments due by 8-22-05; published 7-21-05 [FR 05-14406]
New York; comments due by 8-22-05; published 7-21-05 [FR 05-14407]

Environmental statements; availability, etc.:
Coastal nonpoint pollution control program—
Minnesota and Texas; Open for comments until further notice; published 10-16-03 [FR 03-26087]

Pesticides; tolerances in food, animal feeds, and raw agricultural commodities:
Cyhexatin; comments due by 8-26-05; published 7-27-05 [FR 05-14738]
Trifloxystrobin; comments due by 8-23-05; published 6-24-05 [FR 05-12447]

Solid wastes:
Municipal solid waste landfill permit programs—
Indiana; comments due by 8-25-05; published 7-26-05 [FR 05-14734]

Superfund program:
National oil and hazardous substances contingency plan priorities list; comments due by 8-25-05; published 7-26-05 [FR 05-14608]

Water pollution control:
National Pollutant Discharge Elimination System—
Concentrated animal feeding operations in New Mexico and Oklahoma; general permit for discharges; Open for comments until further notice; published 12-7-04 [FR 04-26817]

Water pollution; effluent guidelines for point source categories:
Meat and poultry products processing facilities; Open for comments until further notice; published 9-8-04 [FR 04-12017]

FEDERAL COMMUNICATIONS COMMISSION

Committees; establishment, renewal, termination, etc.:
Technological Advisory Council; Open for comments until further notice; published 3-18-05 [FR 05-05403]

Common carrier services:
Interconnection—
Incumbent local exchange carriers unbounding obligations; local competition provisions; wireline services offering advanced telecommunications capability; Open for comments until further notice; published 12-29-04 [FR 04-28531]
Wireless telecommunications services—
Commercial Spectrum Enhancement Act implementation; competitive bidding rules modernization; comments due by 8-26-05; published 7-27-05 [FR 05-14840]

FEDERAL MARITIME COMMISSION

Ocean shipping in foreign commerce:
Non-vessel-operating common carrier service arrangements; comments due by 8-23-05; published 8-8-05 [FR 05-15641]

GENERAL SERVICES ADMINISTRATION

Federal Acquisition Regulation (FAR):
Past performance evaluation of orders; comments due by 8-22-05; published 6-21-05 [FR 05-12183]

Federal Management Regulation:
Transportation management and transportation payment and audit; data collection standards and reporting requirements; comments due by 8-22-05; published 6-22-05 [FR 05-12282]

HEALTH AND HUMAN SERVICES DEPARTMENT

Food and Drug Administration

Color additives:
Mica-based pearlescent pigments; comments due by 8-22-05; published 7-22-05 [FR 05-14457]

Listing of color additives exempt from certification:
Tomato Lycopene extract and tomato lycopene concentrate; comments due by 8-25-05; published 7-26-05 [FR 05-14631]

Reports and guidance documents; availability, etc.:
Evaluating safety of antimicrobial new animal drugs with regard to their microbiological effects on bacteria of human health concern; Open for comments until further notice; published 10-27-03 [FR 03-27113]
Medical devices—
Dental noble metal alloys and base metal alloys; Class II special controls; Open for comments until further notice; published 8-23-04 [FR 04-19179]

HOMELAND SECURITY DEPARTMENT

Coast Guard

Anchorage regulations:
Maryland; Open for comments until further notice; published 1-14-04 [FR 04-00749]

Regattas and marine parades:
Cambridge Offshore Challenge, Choptank River, MD; comments due by 8-26-05; published 7-27-05 [FR 05-14754]
Strait Thunder Race; comments due by 8-26-05; published 6-27-05 [FR 05-12648]
Sunset Lake Hydrofest, NJ; comments due by 8-26-05; published 7-27-05 [FR 05-14755]

Rulemaking petitions:
Fall River, MA; marine spills of liquefied natural gas; comments due by 8-22-05; published 6-23-05 [FR 05-12399]

HOMELAND SECURITY DEPARTMENT

Federal Emergency Management Agency

Assistance Program Under the 9/11 Heroes Stamp Act of 2001; comments due by 8-25-05; published 7-26-05 [FR 05-14517]

HOUSING AND URBAN DEVELOPMENT DEPARTMENT

Grants and cooperative agreements; availability, etc.:
Homeless assistance; excess and surplus Federal properties; Open for comments until further notice; published 8-5-05 [FR 05-15251]

INTERIOR DEPARTMENT

Land Management Bureau

Oil and gas operations:
Onshore Federal and Indian oil and gas leases; approval of operations (Order No.1); comments due by 8-26-05; published 7-27-05 [FR 05-14103]

INTERIOR DEPARTMENT

Fish and Wildlife Service

Endangered and threatened species permit applications
Recovery plans—
Paiute cutthroat trout; Open for comments until further notice; published 9-10-04 [FR 04-20517]

Endangered and threatened species:
Findings on petitions, etc.—
California spotted owl; comments due by 8-22-05; published 6-21-05 [FR 05-11938]

LIBRARY OF CONGRESS

Copyright Office, Library of Congress

Copyright office and procedures:
Preregistration of certain unpublished copyright claims; comments due by 8-22-05; published 7-22-05 [FR 05-14516]

LIBRARY OF CONGRESS

Copyright Royalty Board, Library of Congress

Sound recordings use under statutory licenses; notice and recordkeeping; comments due by 8-26-05; published 7-27-05 [FR 05-14872]

NATIONAL AERONAUTICS AND SPACE ADMINISTRATION

Federal Acquisition Regulation (FAR):
Past performance evaluation of orders; comments due by 8-22-05; published 6-21-05 [FR 05-12183]

NUCLEAR REGULATORY COMMISSION

Environmental statements; availability, etc.:

Fort Wayne State Developmental Center; Open for comments until further notice; published 5-10-04 [FR 04-10516]

Spent nuclear fuel and high-level radioactive waste; independent storage; licensing requirements:

Approved spent fuel storage casks; list; comments due by 8-24-05; published 7-25-05 [FR 05-14568]

Spent nuclear fuel and high-level radioactive waste; independent storage; licensing requirements:

Approved spent fuel storage casks; list; comments due by 8-24-05; published 7-25-05 [FR 05-14567]

SMALL BUSINESS ADMINISTRATION

Disaster loan areas:

Maine; Open for comments until further notice; published 2-17-04 [FR 04-03374]

STATE DEPARTMENT

Visas; nonimmigrant and immigrant documentation:

Unlawful voters; comments due by 8-22-05; published 6-21-05 [FR 05-12219]

OFFICE OF UNITED STATES TRADE REPRESENTATIVE

Trade Representative, Office of United States

Generalized System of Preferences:

2003 Annual Product Review, 2002 Annual Country Practices Review, and previously deferred product decisions; petitions disposition; Open for comments until further notice; published 7-6-04 [FR 04-15361]

TRANSPORTATION DEPARTMENT

Federal Aviation Administration

Airworthiness directives:

Aerospatiale; comments due by 8-22-05; published 7-21-05 [FR 05-14393]

Agusta S.p.A.; comments due by 8-23-05; published 6-24-05 [FR 05-12419]

Boeing; comments due by 8-22-05; published 7-6-05 [FR 05-13222]

Cessna; comments due by 8-22-05; published 6-21-05 [FR 05-12149]

General Electric Co.; comments due by 8-22-05; published 6-21-05 [FR 05-12173]

Lycoming; comments due by 8-22-05; published 7-22-05 [FR 05-14575]

McDonnell Douglas; comments due by 8-22-05; published 7-8-05 [FR 05-13436]

Sikorsky; comments due by 8-22-05; published 6-23-05 [FR 05-12417]

Turbomeca, S.A.; comments due by 8-23-05; published 6-24-05 [FR 05-12415]

Airworthiness standards:

Class E airspace; comments due by 8-26-05; published 7-12-05 [FR 05-13661]

Area navigation routes; comments due by 8-22-05; published 7-6-05 [FR 05-13266]

TRANSPORTATION DEPARTMENT

National Highway Traffic Safety Administration

Motor vehicle safety standards:

Designated seating positions and seat belt assembly anchorages; comments due by 8-22-05; published 6-22-05 [FR 05-12240]

TRANSPORTATION DEPARTMENT

Pipeline and Hazardous Materials Safety Administration

Pipeline safety:

Gas pipelines; polyamide-11 plastic pipe use; comments due by 8-22-05; published 6-22-05 [FR 05-12356]

TREASURY DEPARTMENT

Internal Revenue Service

Income taxes:

Attained age of the insured under section 7702; comments due by 8-24-05; published 5-24-05 [FR 05-10166]

Dual consolidated losses; comments due by 8-22-05; published 5-24-05 [FR 05-10160]

Partnership equity for services; comments due by 8-22-05; published 5-24-05 [FR 05-10164]

Qualified intellectual property contributions; information returns by donees; cross-reference; comments due by 8-22-05; published 5-23-05 [FR 05-10228]

Safe harbor for valuation under section 475; comments due by 8-22-05; published 5-24-05 [FR 05-10167]

Section 367 stock transfers involving foreign corporations in transactions governed by section 304; comments due by 8-23-05; published 5-25-05 [FR 05-10267]

Section 752 assumption of partner liabilities; cross reference; comments due by 8-24-05; published 5-26-05 [FR 05-10265]

LIST OF PUBLIC LAWS

This is a continuing list of public bills from the current session of Congress which have become Federal laws. It may be used in conjunction with "P L U S" (Public Laws Update Service) on 202–741–6043. This list is also available online at *http://www.archives.gov/federal_register/public_laws/public_laws.html*.

The text of laws is not published in the **Federal Register** but may be ordered in "slip law" (individual pamphlet) form from the Superintendent of Documents, U.S. Government Printing Office, Washington, DC 20402 (phone, 202–512–1808). The text will also be made available on the Internet from GPO Access at *http://www.gpoaccess.gov/plaws/index.html*. Some laws may not yet be available.

H.R. 3423/P.L. 109–43

Medical Device User Fee Stabilization Act of 2005 (Aug. 1, 2005; 119 Stat. 439)

H.R. 38/P.L. 109–44

Upper White Salmon Wild and Scenic Rivers Act (Aug. 2, 2005; 119 Stat. 443)

H.R. 481/P.L. 109–45

Sand Creek Massacre National Historic Site Trust Act of 2005 (Aug. 2, 2005; 119 Stat. 445)

H.R. 541/P.L. 109–46

To direct the Secretary of Agriculture to convey certain land to Lander County, Nevada, and the Secretary of the Interior to convey certain land to Eureka County, Nevada, for continued use as cemeteries. (Aug. 2, 2005; 119 Stat. 448)

H.R. 794/P.L. 109–47

Colorado River Indian Reservation Boundary Correction Act (Aug. 2, 2005; 119 Stat. 451)

H.R. 1046/P.L. 109–48

To authorize the Secretary of the Interior to contract with the city of Cheyenne, Wyoming, for the storage of the city's water in the Kendrick Project, Wyoming. (Aug. 2, 2005; 119 Stat. 455)

H.J. Res. 59/P.L. 109–49

Expressing the sense of Congress with respect to the women suffragists who fought for and won the right of women to vote in the United States. (Aug. 2, 2005; 119 Stat. 457)

S. 571/P.L. 109–50

To designate the facility of the United States Postal Service located at 1915 Fulton Street in Brooklyn, New York, as the "Congresswoman Shirley A. Chisholm Post Office Building". (Aug. 2, 2005; 119 Stat. 459)

S. 775/P.L. 109–51

To designate the facility of the United States Postal Service located at 123 W. 7th Street in Holdenville, Oklahoma, as the "Boone Pickens Post Office". (Aug. 2, 2005; 119 Stat. 460)

S. 904/P.L. 109–52

To designate the facility of the United States Postal Service located at 1560 Union Valley Road in West Milford, New Jersey, as the "Brian P. Parrello Post Office Building". (Aug. 2, 2005; 119 Stat. 461)

H.R. 3045/P.L. 109–53

Dominican Republic-Central America-United States Free Trade Agreement Implementation Act (Aug. 2, 2005; 119 Stat. 462)

H.R. 2361/P.L. 109–54

Department of the Interior, Environment, and Related Agencies Appropriations Act, 2006 (Aug. 2, 2005; 119 Stat. 499)

H.R. 2985/P.L. 109–55

Legislative Branch Appropriations Act, 2006 (Aug. 2, 2005; 119 Stat. 565)

S. 45/P.L. 109–56

To amend the Controlled Substances Act to lift the patient limitation on prescribing drug addiction treatments by medical practitioners in group practices, and for other purposes. (Aug. 2, 2005; 119 Stat. 591)

S. 1395/P.L. 109–57

Controlled Substances Export Reform Act of 2005 (Aug. 2, 2005; 119 Stat. 592)

Last List August 2, 2005

Public Laws Electronic Notification Service (PENS)

PENS is a free electronic mail notification service of newly enacted public laws. To subscribe, go to *http://listserv.gsa.gov/archives/publaws-l.html*

Note: This service is strictly for E-mail notification of new laws. The text of laws is not available through this service. **PENS** cannot respond to specific inquiries sent to this address.