Federal Register

10–17–05 Monday
Vol. 70 No. 199 Oct. 17, 2005

Pages 60203–60404

The **FEDERAL REGISTER** (ISSN 0097–6326) is published daily, Monday through Friday, except official holidays, by the Office of the Federal Register, National Archives and Records Administration, Washington, DC 20408, under the Federal Register Act (44 U.S.C. Ch. 15) and the regulations of the Administrative Committee of the Federal Register (1 CFR Ch. I). The Superintendent of Documents, U.S. Government Printing Office, Washington, DC 20402 is the exclusive distributor of the official edition. Periodicals postage is paid at Washington, DC.

The **FEDERAL REGISTER** provides a uniform system for making available to the public regulations and legal notices issued by Federal agencies. These include Presidential proclamations and Executive Orders, Federal agency documents having general applicability and legal effect, documents required to be published by act of Congress, and other Federal agency documents of public interest.

Documents are on file for public inspection in the Office of the Federal Register the day before they are published, unless the issuing agency requests earlier filing. For a list of documents currently on file for public inspection, see *www.archives.gov.*

The seal of the National Archives and Records Administration authenticates the Federal Register as the official serial publication established under the Federal Register Act. Under 44 U.S.C. 1507, the contents of the **Federal Register** shall be judicially noticed.

The **Federal Register** is published in paper and on 24x microfiche. It is also available online at no charge as one of the databases on GPO Access, a service of the U.S. Government Printing Office.

The online edition of the **Federal Register** *www.gpoaccess.gov/nara,* available through GPO Access, is issued under the authority of the Administrative Committee of the Federal Register as the official legal equivalent of the paper and microfiche editions (44 U.S.C. 4101 and 1 CFR 5.10). It is updated by 6 a.m. each day the **Federal Register** is published and includes both text and graphics from Volume 59, Number 1 (January 2, 1994) forward.

For more information about GPO Access, contact the GPO Access User Support Team, call toll free 1-888-293-6498; DC area 202-512-1530; fax at 202-512-1262; or via e-mail at *gpoaccess@gpo.gov.* The Support Team is available between 7:00 a.m. and 9:00 p.m. Eastern Time, Monday–Friday, except official holidays.

The annual subscription price for the **Federal Register** paper edition is $749 plus postage, or $808, plus postage, for a combined **Federal Register, Federal Register** Index and List of CFR Sections Affected (LSA) subscription; the microfiche edition of the **Federal Register** including the **Federal Register** Index and LSA is $165, plus postage. Six month subscriptions are available for one-half the annual rate. The prevailing postal rates will be applied to orders according to the delivery method requested. The price of a single copy of the daily **Federal Register,** including postage, is based on the number of pages: $11 for an issue containing less than 200 pages; $22 for an issue containing 200 to 400 pages; and $33 for an issue containing more than 400 pages. Single issues of the microfiche edition may be purchased for $3 per copy, including postage. Remit check or money order, made payable to the Superintendent of Documents, or charge to your GPO Deposit Account, VISA, MasterCard, American Express, or Discover. Mail to: New Orders, Superintendent of Documents, P.O. Box 371954, Pittsburgh, PA 15250-7954; or call toll free 1-866-512-1800, DC area 202-512-1800; or go to the U.S. Government Online Bookstore site, see *bookstore.gpo.gov.*

There are no restrictions on the republication of material appearing in the **Federal Register.**

How To Cite This Publication: Use the volume number and the page number. Example: 70 FR 12345.

Postmaster: Send address changes to the Superintendent of Documents, Federal Register, U.S. Government Printing Office, Washington DC 20402, along with the entire mailing label from the last issue received.

SUBSCRIPTIONS AND COPIES

PUBLIC

Subscriptions:

Paper or fiche	**202–512–1800**
Assistance with public subscriptions	**202–512–1806**

General online information **202–512–1530; 1–888–293–6498**

Single copies/back copies:

Paper or fiche	**202–512–1800**
Assistance with public single copies	**1–866–512–1800 (Toll-Free)**

FEDERAL AGENCIES

Subscriptions:

Paper or fiche	**202–741–6005**
Assistance with Federal agency subscriptions	**202–741–6005**

FEDERAL REGISTER WORKSHOP

THE FEDERAL REGISTER: WHAT IT IS AND HOW TO USE IT

FOR: Any person who uses the Federal Register and Code of Federal Regulations.

WHO: Sponsored by the Office of the Federal Register.

WHAT: Free public briefings (approximately 3 hours) to present:

1. The regulatory process, with a focus on the Federal Register system and the public's role in the development of regulations.

2. The relationship between the Federal Register and Code of Federal Regulations.

3. The important elements of typical Federal Register documents.

4. An introduction to the finding aids of the FR/CFR system.

WHY: To provide the public with access to information necessary to research Federal agency regulations which directly affect them. There will be no discussion of specific agency regulations.

WHEN: Tuesday, October 25, 2005
9:00 a.m.–Noon

WHERE: Office of the Federal Register
Conference Room, Suite 700
800 North Capitol Street, NW.
Washington, DC 20002

RESERVATIONS: (202) 741–6008

Printed on recycled paper.

Contents

Federal Register

Vol. 70, No. 199

Monday, October 17, 2005

Agriculture Department
See Forest Service
See Rural Utilities Service
NOTICES
Committees; establishment, renewal, termination, etc.:
Provincial Advisory Committees, 60272

Antitrust Division
NOTICES
National cooperative research notifications:
AAF Association, Inc., 60369
DVD Copy Control Association, 60369–60370
Petroleum Environmental Research Forum, 60370
Telemanagement Forum, 60370–60371

Arctic Research Commission
NOTICES
Meetings, 60278

Broadcasting Board of Governors
NOTICES
Meetings; Sunshine Act, 60278

Centers for Disease Control and Prevention
NOTICES
Meetings:
Injury Prevention and Control Advisory Committee; teleconference, 60349
Public safety and health protection:
Special Exposure Cohort at Iowa University Ames Laboratory; employee class designation, 60349
Special Exposure Cohort at Linde Ceramics Plant; employee class designation, 60349–60350

Commerce Department
See Industry and Security Bureau
See International Trade Administration
See National Oceanic and Atmospheric Administration

Comptroller of the Currency
NOTICES
Agency information collection activities; proposals, submissions, and approvals, 60391–60393

Corporation for National and Community Service
PROPOSED RULES
Grants:
AmeriCorps State and National, Senior Corps, and Learn and Serve America programs; criminal background checks; comment request, 60257–60259

Customs and Border Protection Bureau
NOTICES
Customs duties; interest on overdue accounts and refunds; quarterly interest rates, 60362–60363

Defense Department
NOTICES
Meetings:
Defense Acquisition Performance Project, 60304

Education Department
NOTICES
Agency information collection activities; proposals, submissions, and approvals, 60304–60305

Energy Department
See Federal Energy Regulatory Commission
NOTICES
Natural gas exportation and importation:
Great Lakes Gas Transmission LP, et al., 60305–60311

Environmental Protection Agency
RULES
Solid waste:
Hazardous waste; identification and listing—Exclusions; CFR correction, 60217
Toxic substances:
Chemical inventory update reporting, 60217–60221
NOTICES
Agency information collection activities; proposals, submissions, and approvals, 60335–60336
Meetings
Science Advisory Board, 60336–60337
Meetings:
Children's Health Protection Advisory Committee, 60337–60338
Science Advisory Board, 60338

Executive Office of the President
See Presidential Documents

Federal Aviation Administration
RULES
Airworthiness directives:
Bell Helicopter and Coastal Helicopters, Inc., 60205–60206
Bell Helicopter Textron Canada, 60203–60205
MD Helicopters, Inc., 60206–60211
Pratt & Whitney, 60211–60214
PROPOSED RULES
Airworthiness directives:
Bell Helicopter, 60246–60250
Eurocopter France, 60244–60246

Federal Communications Commission
RULES
Common carrier services:
Interconnection—
Broadband access to Internet over wireline facilities; appropriate framework, 60222–60234
PROPOSED RULES
Common carrier services:
Broadband Internet access services; consumer protection regulations, 60259–60271

Federal Deposit Insurance Corporation
NOTICES
Agency information collection activities; proposals, submissions, and approvals, 60391–60393

Federal Energy Regulatory Commission
NOTICES
Complaints filed:
Niagara Mohawk Power Corp. et al., 60324
Environmental statements; availability, etc.:
ANR Pipeline Co., 60324–60325
Sound Energy Solutions, 60325–60327
Tennessee Gas Pipeline Co. et al., 60327–60328
Environmental statements; notice of intent:
Tennessee Gas Pipeline Co., 60328–60330
Texas Eastern Transmission, LP, 60330–60331
Hydroelectric applications, 60331–60333
Meetings:
California Independent System Operator Corp., 60333
State of the natural gas infrastructure; technical conference, 60333–60334
Off-the-record communications, 60334–60335
Applications, hearings, determinations, etc.:
ANR Pipeline Co., 60311
Calpine Texas Pipeline, L.P., 60311–60312
Colorado Interstate Gas Co., 60312
Covanta Fairfax, Inc., 60312–60313
Dominion Cove Point LNG, LP, 60313
El Paso Natural Gas Co., 60313
Enbridge Pipelines (AlaTenn) L.L.C., 60314
Enbridge Pipelines (KPC), 60314–60315
Enbridge Pipelines (Midla) L.L.C., 60313–60314
Entergy Services, Inc., 60315
Gas Transmission Northwest Corp., 60315
Kumeyaay Wind LLC, 60315–60316
Midwest Independent Transmission System Operator, Inc., 60316
Montana-Dakota Utilities Co., 60316–60317
National Fuel Gas Supply Corp., 60317
Natural Gas Pipeline Co. of America, 60317–60318
North Baja Pipeline, LLC, 60319
Northern Border Pipeline Co., 60319
Northern Natural Gas Co., 60319–60320
SCG Pipeline, Inc., 60320–60321
Southern Co. Services, Inc., et al., 60321
TransColorado Gas Transmission Co., 60321
Transcontinental Gas Pipe Line Corp., 60321–60322
Trunkline LNG Co., LLC, 60322–60323
Williston Basin Interstate Pipeline Co., 60323
Woodland Biomass Power, Ltd., 60323–60324

Federal Reserve System
PROPOSED RULES
Truth in lending (Regulation Z):
Open-end credit rules; comment extension, 60235–60244
NOTICES
Agency information collection activities; proposals, submissions, and approvals, 60339–60341, 60391–60393
Banks and bank holding companies:
Formations, acquisitions, and mergers, 60341
Federal Reserve Bank services:
Priced services; private sector adjustment factor, 60341–60347

Fish and Wildlife Service
NOTICES
Comprehensive conservation plans; availability, etc.:
Orchard National Wildlife Refuge, IL, 60364–60365
Environmental statements; notice of intent:
Prime Hook National Wildlife Refuge, DE, 60365

Forest Service
NOTICES
Appealable decisions; legal notice:
Intermountain Region, 60272–60274
Environmental statements; notice of intent:
Eldorado National Forest, CA, 60275–60277
Lewis and Clark National Forest, MT; Dry Fork Vegetative Restoration Project, 60274–60275
Meetings:
Santa Rosa and San Jacinto Mountain National Monument Advisory Committee, 60365–60366

General Services Administration
RULES
Federal travel:
Per diem expenses, 60221–60222
NOTICES
Privacy Act:
Systems of records, 60347–60349

Health and Human Services Department
See Centers for Disease Control and Prevention
See Indian Health Service

Homeland Security Department
See Customs and Border Protection Bureau

Housing and Urban Development Department
NOTICES
Agency information collection activities; proposals, submissions, and approvals, 60363–60364

Indian Health Service
NOTICES
Organization, functions, and authority delegations:
Headquarters reorganization, 60350–60362

Industry and Security Bureau
NOTICES
Meetings:
Transportation and Related Equipment Technical Advisory Committee, 60278–60279

Interior Department
See Fish and Wildlife Service
See Land Management Bureau

Internal Revenue Service
RULES
Procedure and administration:
Organizational and employee performance; balanced measurement system, 60214–60217
PROPOSED RULES
Procedure and administration:
Organizational and employee performance; balanced measurement system, 60256–60257

International Trade Administration
NOTICES
Antidumping:
Circular welded carbon steel pipes and tubes from—
Taiwan, 60279–60280
Preserved mushrooms—
China, 60280–60281
Small diameter seamless carbon and alloy steel standard, line and pressure pipe from—
Brazil, 60282–60284

Countervailing duties:
Low enriched uranium from—
Various countries, 60284

International Trade Commission
NOTICES
Import investigations:
Pipe and tube from—
Various countries, 60367–60368
Uranium from—
Russia, 60368
Meetings; Sunshine Act, 60368–60369

Justice Department
See Antitrust Division
See Parole Commission

Labor Department
NOTICES
Agency information collection activities; proposals, submissions, and approvals, 60372–60373

Land Management Bureau
NOTICES
Meetings:
Resource Advisory Councils—
Twin Falls District, 60366
Santa Rosa and San Jacinto Mountain National Monument Advisory Committee, 60365–60366
Withdrawal and reservation of lands:
Nevada, 60367

National Credit Union Administration
NOTICES
Meetings; Sunshine Act, 60373

National Oceanic and Atmospheric Administration
NOTICES
Endangered and threatened species:
Anadromous fish take—
Oregon Department of Fish and Wildlife; Lower Columbia River coho salmon; correction, 60284–60285
Environmental statements; notice of intent:
Atlantic and Pacific Oceans; Northern right whales, research permit issuance, 60285–60287
Marine mammals:
Incidental taking; authorization letters, etc.—
Scripps Institution of Oceanography; Louisville Ridge, southwest Pacific ocean; low-energy seismic survey; small numbers of marine mammals, 60287–60301
Meetings:
Ecosystem management in South Atlantic region; workshop, 60301
Inter-American Tropical Tuna Commission; U.S. Section General Advisory Committee, 60301
New England Fishery Management Council, 60302
South Atlantic Fishery Management Council, 60302–60304

Nuclear Regulatory Commission
NOTICES
Environmental statements; availability, etc.:
Nuclear Management Co.; correction, 60379
Applications, hearings, determinations, etc.:
Entergy Operations, Inc., 60374–60375
Nuclear Management Co., LLC, 60375–60379

Overseas Private Investment Corporation
NOTICES
Meetings; Sunshine Act, 60379–60380

Parole Commission
NOTICES
Meetings; Sunshine Act, 60371–60372

Pension Benefit Guaranty Corporation
NOTICES
Agency information collection activities; proposals, submissions, and approvals, 60380–60381

Presidential Documents
ADMINISTRATIVE ORDERS
G-8 Women's Justice and Empowerment Initiative; transfer of funds to support (Presidential Determination)
No. 05-41 of September 29, 2005, 60403
Libya:
C-130H aircraft, Libyan-owned; transfers of defense articles or services and brokering activities relating to disposition of Presidential Determination)
No. 2005-40 of September 28, 2005, 60401
Transfer of defense articles and services for chemical weapons destruction (Presidential Determination)
No. 2005-39 of September 28, 2005, 60399
Saudi Arabia; assistance determination (Presidential Determination)
No. 2005-38 of September 26, 2005, 60395–60397

Rural Utilities Service
NOTICES
Agency information collection activities; proposals, submissions, and approvals, 60277–60278

Securities and Exchange Commission
NOTICES
Self-regulatory organizations; proposed rule changes
National Stock Exchange, 60113 [**Editorial Note:** This document appearing at 70 FR 60113 in the **Federal Register**of October 14, 2005, was incorrectly listed in that issue's Table of Contents.]

Small Business Administration
NOTICES
Disaster loan areas:
Alabama, 60381
Florida, 60381
Louisiana, 60381–60382
Texas, 60382
Loan programs:
Military Reservist Economic Injury Disaster Loan Program, 60382
Meetings:
Regulatory Fairness Boards—
Region II; hearing, 60383
Applications, hearings, determinations, etc.:
Rustic Canyon Ventures SBIC, L.P., 60381

Social Security Administration
PROPOSED RULES
Administrative regulations:
Penalty imposition for false or misleading statements or witholding information; representative payment policies and procedures, 60251–60256
NOTICES
Privacy Act:
Systems of records, 60383–60388

State Department
NOTICES
Agency information collection activities; proposals, submissions, and approvals, 60388–60389

Transportation Department
See Federal Aviation Administration
NOTICES
Privacy Act:
Systems of records, 60389–60390

Treasury Department
See Comptroller of the Currency
See Internal Revenue Service
NOTICES
Meetings:
Federal Tax Reform, President's Advisory Panel, 60390
Senior Executive Service Performance Review Board; membership, 60390–60391

Separate Parts In This Issue

Part II
Executive Office of the President, Presidential Documents, 60395–60397

Reader Aids
Consult the Reader Aids section at the end of this issue for phone numbers, online resources, finding aids, reminders, and notice of recently enacted public laws.

To subscribe to the Federal Register Table of Contents LISTSERV electronic mailing list, go to http://listserv.access.gpo.gov and select Online mailing list archives, FEDREGTOC-L, Join or leave the list (or change settings); then follow the instructions.

CFR PARTS AFFECTED IN THIS ISSUE

A cumulative list of the parts affected this month can be found in the Reader Aids section at the end of this issue.

3 CFR

Administrative Orders:

Presidential Determinations:

No. 2005–38 of September 26, 2005 60397

No. 2005–39 of September 28, 2005 60399

No. 2005–40 of September 28, 2005 60401

No. 2005–41 of September 29, 2005 60403

12 CFR

Proposed Rules:

226 60235

14 CFR

39 (4 documents) 60203, 60205, 60206, 60211

Proposed Rules:

39 (2 documents) 60244, 60246

20 CFR

Proposed Rules:

404 60251

408 60251

416 60251

26 CFR

801 60214

Proposed Rules:

801 60256

40 CFR

261 60217

710 60217

41 CFR

301-11 60221

301-74 60221

45 CFR

Proposed Rules:

Ch. XXV 60257

47 CFR

51 60222

63 60222

64 60222

Proposed Rules:

63 60259

64 60259

Rules and Regulations

Federal Register
Vol. 70, No. 199
Monday, October 17, 2005

This section of the FEDERAL REGISTER contains regulatory documents having general applicability and legal effect, most of which are keyed to and codified in the Code of Federal Regulations, which is published under 50 titles pursuant to 44 U.S.C. 1510.

The Code of Federal Regulations is sold by the Superintendent of Documents. Prices of new books are listed in the first FEDERAL REGISTER issue of each week.

DEPARTMENT OF TRANSPORTATION

Federal Aviation Administration

14 CFR Part 39

[Docket No. FAA–2005–21680; Directorate Identifier 2004–SW–48–AD; Amendment 39–14341; AD 2005–21–03]

RIN 2120–AA64

Airworthiness Directives; Bell Helicopter Textron Canada Model 206A, A–1, B, B–1, L, L–1, L–3, L–4 Helicopters

AGENCY: Federal Aviation Administration, DOT.

ACTION: Final rule.

SUMMARY: This amendment adopts a new airworthiness directive (AD) for the specified Bell Helicopter Textron Canada (BHTC) model helicopters that requires, before the first flight of each day, checking the tail rotor blade (blade) root doublers (doublers) for an edge void or de-bond on both sides of each blade, and if an edge void or de-bond is found, replacing the unairworthy blade with an airworthy blade. This AD also requires replacing any affected serial-numbered blade with an airworthy blade. This amendment is prompted by reports of de-bond of the doublers due to inadequate surface preparation resulting in poor adherence of the doublers. The actions specified by this AD are intended to prevent loss of a blade, loss of tail rotor control, and subsequent loss of control of the helicopter.

DATES: Effective November 21, 2005.

ADDRESSES: You may get the service information identified in this AD from Bell Helicopter Textron Canada, 12,800 Rue de l'Avenir, Mirabel, Quebec J7J1R4, telephone (450) 437–2862 or (800) 363–8023, fax (450) 433–0272.

Examining the Docket

You may examine the docket that contains this AD, any comments, and other information on the Internet at *http://dms.dot.gov,* or at the Docket Management System (DMS), U.S. Department of Transportation, 400 Seventh Street, SW., Room PL–401, on the plaza level of the Nassif Building, Washington, DC.

FOR FURTHER INFORMATION CONTACT: Sharon Miles, Aviation Safety Engineer, FAA, Rotorcraft Directorate, Regulations and Guidance Group, Fort Worth, Texas 76193–0111, telephone (817) 222–5122, fax (817) 222–5961.

SUPPLEMENTARY INFORMATION: A proposal to amend 14 CFR part 39 to include an AD for the specified BHTC model helicopters was published in the **Federal Register** on June 28, 2005 (70 FR 37060). That action proposed to require, before the first flight of each day, checking the blade doublers for an edge void or de-bond on both sides of each blade, and if an edge void or de-bond is found, replacing the unairworthy blade with an airworthy blade. Also, that action proposed to require replacing any affected serial-numbered blade with an airworthy blade.

Transport Canada, the airworthiness authority for Canada, notified the FAA that an unsafe condition may exist on Model 206A, B, and L series helicopters. Transport Canada advises that an inadequate surface preparation on a limited number of blades resulted in two reported instances of blade root doubler de-bond. They also advise that to ensure blade integrity all suspected blades are to be checked daily until removed from service.

BHTC has issued Alert Service Bulletin Nos. 206–04–101 and 206L–04–131, both dated September 13, 2004, which specify a daily check of the doubler area to verify integrity of the doubler by a pilot as part of the daily pre-flight check. The service bulletins also specify a retirement from service of affected blades, which constitutes terminating action. Transport Canada classified these service bulletins as mandatory and issued AD No. CF–2004–25, dated November 23, 2004, to ensure the continued airworthiness of these helicopters in Canada.

These helicopter models are now manufactured in Canada and are type certificated for operation in the United States under the provisions of 14 CFR 21.29 and the applicable bilateral agreement. Pursuant to the applicable bilateral agreement, Transport Canada has kept the FAA informed of the situation described above. The FAA has examined the findings of Transport Canada, reviewed all available information, and determined that AD action is necessary for products of these type designs that are certificated for operation in the United States.

Interested persons have been afforded an opportunity to participate in the making of this amendment. No comments were received on the proposal or the FAA's determination of the cost to the public. The FAA has determined that air safety and the public interest require the adoption of the rule as proposed.

The FAA estimates that this AD will affect 2,194 helicopters of U.S. registry. The required actions will:

- Take about ¼ work hour to do a daily check for blade edge voids and de-bonds; and
- Take about 4 work hours to replace a blade at an average labor rate of $65 per work hour.
- Cost about $5,848 for a replacement blade.

Based on these figures, we estimate the total cost impact of the AD on U.S. operators to be $201,058, assuming 26 blades are affected and replaced and assuming 100 daily checks are done.

Regulatory Findings

We have determined that this AD will not have federalism implications under Executive Order 13132. This AD will not have a substantial direct effect on the States, on the relationship between the national Government and the States, or on the distribution of power and responsibilities among the various levels of government.

For the reasons discussed above, I certify that the regulation:

1. Is not a ''significant regulatory action'' under Executive Order 12866;
2. Is not a ''significant rule'' under the DOT Regulatory Policies and Procedures (44 FR 11034, February 26, 1979); and
3. Will not have a significant economic impact, positive or negative, on a substantial number of small entities under the criteria of the Regulatory Flexibility Act.

We prepared an economic evaluation of the estimated costs to comply with

this AD. See the DMS to examine the economic evaluation.

Authority for This Rulemaking

Title 49 of the United States Code specifies the FAA's authority to issue rules on aviation safety. Subtitle I, section 106, describes the authority of the FAA Administrator. Subtitle VII, Aviation Programs, describes in more detail the scope of the Agency's authority.

We are issuing this rulemaking under the authority described in subtitle VII, part A, subpart III, section 44701, ''General requirements.'' Under that section, Congress charges the FAA with promoting safe flight of civil aircraft in air commerce by prescribing regulations for practices, methods, and procedures the Administrator finds necessary for safety in air commerce. This regulation is within the scope of that authority because it addresses an unsafe condition that is likely to exist or develop on products identified in this rulemaking action.

List of Subjects in 14 CFR Part 39

Air transportation, Aircraft, Aviation safety, Safety.

Adoption of the Amendment

■ Accordingly, pursuant to the authority delegated to me by the Administrator, the Federal Aviation Administration amends part 39 of the Federal Aviation Regulations (14 CFR part 39) as follows:

PART 39—AIRWORTHINESS DIRECTIVES

■ 1. The authority citation for part 39 continues to read as follows:

Authority: 49 U.S.C. 106(g), 40113, 44701.

§ 39.13 [Amended]

■ 2. Section 39.13 is amended by adding a new airworthiness directive to read as follows:

2005–21–03 Bell Helicopter Textron Canada: Amendment 39–14341. Docket No. FAA–2005–21680; Directorate Identifier 2004–SW–48–AD.

Applicability: Model 206A, A–1, B, B–1, L, L–1, L–3, L–4 helicopters, with tail rotor blade (blade), part number (P/N) 206–016–201–131, serial numbers with a prefix of ''CS'' and 4820 through 4845, installed, certificated in any category.

Compliance: Required as indicated, unless accomplished previously.

To prevent loss of a blade, loss of tail rotor control, and subsequent loss of control of the helicopter, accomplish the following:

(a) Before the first flight of each day, clean each blade and visually check the blade root doublers for an edge void or de-bond on both sides of each blade as depicted in Figure 1 of this AD. An owner/operator (pilot), holding at least a private pilot certificate, may perform this visual check and must enter compliance with this paragraph into the helicopter maintenance records by following 14 CFR sections 43.11 and 91.417(a)(2)(v).

BILLING CODE 4910–13–P

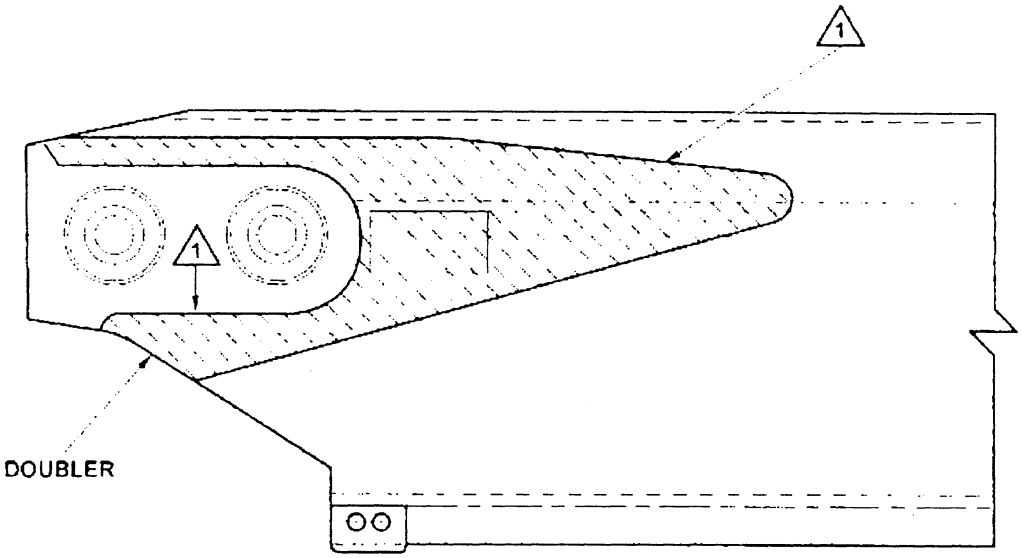

NOTE

1 **Inspect the doubler for an edge void or de-bond on both sides of each blade.**

BILLING CODE 4910–13–C

(b) If an edge void or a de-bond is found, before further flight, replace the blade with an airworthy blade with a serial number other than those to which this AD applies.

(c) Within 100 hours time-in-service, replace all affected, serial-numbered blades with airworthy blades with a serial number other than those to which this AD applies.

Note 1: Bell Helicopter Textron Alert Service Bulletin Nos. 206–04–101 and 206L–04–131, both dated September 13, 2004, pertain to the subject of this AD.

(d) Replacing an affected, serial-numbered blade with an airworthy blade without an affected serial number contained in the applicability section of this AD constitutes terminating action for the requirements of this AD for that blade.

(e) To request a different method of compliance or a different compliance time for this AD, follow the procedures in 14 CFR 39.19. Contact the Safety Management Group, Rotorcraft Directorate, FAA, for information about previously approved alternative methods of compliance.

(f) Special flight permits may be issued in accordance with 14 CFR 21.197 and 21.199 to operate the helicopter to a location where the blade may be replaced provided that no doubler edge void or de-bond is found during any check or inspection.

(g) This amendment becomes effective on November 21, 2005.

Note 2: The subject of this AD is addressed in Transport Canada, Canada AD No. CF–2004–25, dated November 23, 2004.

Issued in Fort Worth, Texas, on October 7, 2005.

David A. Downey,

Manager, Rotorcraft Directorate, Aircraft Certification Service.

[FR Doc. 05–20677 Filed 10–14–05; 8:45 am]

BILLING CODE 4910–13–P

DEPARTMENT OF TRANSPORTATION

Federal Aviation Administration

14 CFR Part 39

[Docket No. FAA–2005–21725; Directorate Identifier 2004–SW–45–AD; Amendment 39–14342; AD 2005–21–04]

RIN 2120–AA64

Airworthiness Directives; Bell Helicopter Textron Model 47D1, 47G, 47G–2, 47G–2A, 47G–2A–1, 47G–3, 47G–3B, 47G–3B–1, 47G–3B–2, 47G–3B–2A, 47G–4, 47G–4A, 47G–5, 47G–5A and Coastal Helicopters, Inc. Model OH–13H (Tomcat Mark 5A, 6B, 6C) Helicopters

AGENCY: Federal Aviation Administration, DOT.

ACTION: Final rule.

SUMMARY: This amendment adopts a new airworthiness directive (AD) for Bell Helicopter Textron (Bell) Model 47D1, 47G, 47G–2, 47G–2A, 47G–2A–1, 47G–3, 47G–3B, 47G–3B–1, 47G–3B–2, 47G–3B–2A, 47G–4, 47G–4A, 47G–5, 47G–5A and Coastal Helicopters, Inc. Model OH–13H (Tomcat Mark 5A, 6B, 6C) helicopters that have a certain scissors assembly or weld assembly scissors bracket installed. The AD requires, within 60 days, determining and recording the total hours time-in-service (TIS) for each Parts Manufacturer Approval (PMA)-produced scissors assembly and weld assembly scissors bracket and establishes a life limit for each affected part. This amendment is prompted by the need to establish a life limit on scissors assemblies and weld assembly scissors brackets produced under PMA No. PQ808SW or installed per Supplemental Type Certificate (STC) No. SH2772SW. The actions specified by this AD are intended to establish a life limit to prevent using a scissors assembly or weld assembly scissors bracket past it's life limit, which could result in failure of the part and subsequent loss of control of the helicopter.

DATES: Effective November 21, 2005.

ADDRESSES: You may get the service information identified in this AD from Texas Helicopter Co., Inc., P.O. Box 177686, Irving, Texas 75017, phone (972) 399–1045, fax (972) 790–6397.

Examining the Docket

You may examine the docket that contains this AD, any comments, and other information on the Internet at *http://dms.dot.gov,* or at the Docket Management System (DMS), U.S. Department of Transportation, 400 Seventh Street, SW., Room PL–401, on the plaza level of the Nassif Building, Washington, DC.

FOR FURTHER INFORMATION CONTACT: Marc Belhumeur, Aviation Safety Engineer, FAA, Rotorcraft Directorate, Rotorcraft Certification Office, Fort Worth, Texas 76193–0170, telephone (817) 222–5177, fax (817) 222–5783.

SUPPLEMENTARY INFORMATION: A proposal to amend 14 CFR part 39 to include an AD for the specified model helicopters was published in the **Federal Register** on July 6, 2005 (70 FR 38817). That action proposed to require, within 60 days, determining and recording the total hours TIS for each PMA-produced scissors assembly and weld assembly scissors bracket and establishing a life limit for each affected part.

We have reviewed Texas Helicopter Co., Inc. (THC) Service Bulletin No. SB 003, dated December 1, 2002. THC holds STC No. SH2772SW and produces parts under PMA No. PQ808SW. That service bulletin was issued to clarify maintenance inspections and retirement schedules. The service bulletin specifies maintaining Bell Model 47 series and all other helicopters utilizing a 74–150–259–1M or 74–150–259–3M control installation per STC SH2772SW or 74–150–117–13M scissors bracket weld assembly as PMA replacement, in accordance with THC Instructions For Continued Airworthiness (ICA), Doc. No. THC 2002–22 Rev. 0, dated December 1, 2002. Those ICAs refer to STC SH2772SW and contain the mandatory retirement times for the scissor assembly and weld assembly scissors bracket in the Airworthiness Limitations section.

Interested persons have been afforded an opportunity to participate in the making of this amendment. No comments were received on the proposal or the FAA's determination of the cost to the public. The FAA has determined that air safety and the public interest require the adoption of the rule as proposed.

Based on the manufacturer's production estimate, this AD will affect 350 helicopters of U.S. registry. Determining and recording the initial hours TIS of each scissors assembly will take 1 hour, replacing a scissors assembly will take 2 hours, and replacing a weld assembly scissors bracket will take 8 hours. The average labor rate is $65 per work hour. Required parts will cost approximately $1,300 for the 2 scissors assemblies required per helicopter and $2,500 for each weld assembly scissors bracket required per helicopter. Based on these figures, the total cost impact of the AD on U.S. operators is $1,580,250, assuming all operators determine and record the hours TIS once, and replace the scissors assembly and weld assembly scissors bracket once.

Regulatory Findings

We have determined that this AD will not have federalism implications under Executive Order 13132. This AD will not have a substantial direct effect on the States, on the relationship between the national Government and the States, or on the distribution of power and responsibilities among the various levels of government.

For the reasons discussed above, I certify that the regulation:

1. Is not a ''significant regulatory action'' under Executive Order 12866;

2. Is not a ''significant rule'' under the DOT Regulatory Policies and Procedures (44 FR 11034, February 26, 1979); and

3. Will not have a significant economic impact, positive or negative, on a substantial number of small entities under the criteria of the Regulatory Flexibility Act.

We prepared an economic evaluation of the estimated costs to comply with this AD. See the DMS to examine the economic evaluation.

Authority for This Rulemaking

Title 49 of the United States Code specifies the FAA's authority to issue rules on aviation safety. Subtitle I, section 106, describes the authority of the FAA Administrator. Subtitle VII, Aviation Programs, describes in more detail the scope of the Agency's authority.

We are issuing this rulemaking under the authority described in subtitle VII, part A, subpart III, section 44701, ''General requirements.'' Under that section, Congress charges the FAA with promoting safe flight of civil aircraft in air commerce by prescribing regulations for practices, methods, and procedures the Administrator finds necessary for safety in air commerce. This regulation is within the scope of that authority because it addresses an unsafe condition that is likely to exist or develop on products identified in this rulemaking action.

List of Subjects in 14 CFR Part 39

Air transportation, Aircraft, Aviation safety, Safety.

Adoption of the Amendment

■ Accordingly, pursuant to the authority delegated to me by the Administrator, the Federal Aviation Administration amends part 39 of the Federal Aviation Regulations (14 CFR part 39) as follows:

PART 39—AIRWORTHINESS DIRECTIVES

■ 1. The authority citation for part 39 continues to read as follows:

Authority: 49 U.S.C. 106(g), 40113, 44701.

§ 39.13 [Amended]

■ 2. Section 39.13 is amended by adding a new airworthiness directive to read as follows:

2005–21–04 Bell Helicopter Textron (Bell) and Coastal Helicopters, Inc. (CHI) (formerly Continental Copters, Inc.; and Tom-Cat Helicopters, Inc.): Docket No. FAA–2005–21725; Amendment No. 39–14342; Directorate Identifier 2004–SW–45–AD.

Applicability: The following helicopter models with the referenced Texas Helicopter Co., Inc. (THC) scissors assembly part number (P/N) or weld assembly scissors bracket P/N installed as a Parts Manufacturer Approval (PMA) replacement part or as part of the modification in accordance with Supplemental Type Certificate (STC) No. SH2772SW, certificated in any category.

Model	With scissors assembly P/N	Or weld assembly scissors bracket P/N
(1) Bell Model 47D1, 47G, 47G–2, 47G–2A, 47G–2A–1, 47G–3, 47G–3B, 47G–3B–1, 47G–3B–2, 47G–3B–2A, 47G–4, 47G–4A, 47G–5, 47G–5A; and (2) CHI OH–13H (Tomcat Mark 5A, 6B, or 6C).	74–150–949–9 or 74–150–949–5 or 74–150–249–5M.	74–150–117–13M.

Compliance: Required as indicated, unless accomplished previously.

To prevent using a scissors assembly or weld assembly scissors bracket past it's life limit, which could result in failure of the part and subsequent loss of control of the helicopter, accomplish the following:

(a) Within 60 days, determine and record on the service record or equivalent record the total hours time-in-service (TIS) of each affected part. If the TIS hours cannot be determined, replace the part with an airworthy part with known hours TIS before further flight.

(b) Thereafter, replace each affected part before it accumulates 5,000 hours TIS.

Note: Texas Helicopter Co., Inc. Service Bulletin No. SB 003, dated December 1, 2002, pertains to the subject of this AD.

(c) This AD establishes a life limit of 5,000 hours TIS for each affected PMA-produced scissors assembly and each affected PMA-produced weld assembly scissors bracket.

(d) To request a different method of compliance or a different compliance time for this AD, follow the procedures in 14 CFR 39.19. Contact the Rotorcraft Certification Office, Rotorcraft Directorate, FAA, for information about previously approved alternative methods of compliance.

(e) This amendment becomes effective on November 21, 2005.

Issued in Fort Worth, Texas, on October 7, 2005.

David A. Downey,

Manager, Rotorcraft Directorate, Aircraft Certification Service.

[FR Doc. 05–20680 Filed 10–14–05; 8:45 am]

BILLING CODE 4910–13–P

DEPARTMENT OF TRANSPORTATION

Federal Aviation Administration

14 CFR Part 39

[Docket No. 2004–SW–13–AD; Amendment 39–14340; AD 2005–21–02]

RIN 2120–AA64

Airworthiness Directives; MD Helicopters, Inc. Model 369D, 369E, 369F, 369FF, 500N, and 600N Helicopters

AGENCY: Federal Aviation Administration, DOT.

ACTION: Final rule; request for comments.

SUMMARY: This amendment supersedes an existing airworthiness directive (AD) for the MD Helicopters, Inc. (MDHI) Model 369A, H, HE, HM, HS, D, and E helicopters with a certain part-numbered main rotor blade (blade) and modified with a Helicopter Technology Company, LLC (HTC), Supplemental Type Certificate (STC) No. SR09172RC, SR09074RC, or SR09184RC. That AD currently requires recording on the component history card or equivalent record (record) each torque event (TE) on each blade, inspecting both surfaces of the blade, and replacing any cracked blade with an airworthy blade. Also, that AD establishes life limits for certain part-numbered blades. This amendment revises the model applicability, adds MDHI part-numbered blades, removes any reference to the life limits of the blades, changes the requirements for inspecting the blades, and revises the STC applicability. This amendment also provides that compliance with portions of certain documents constitutes alternative methods of compliance with portions of this AD, contains editorial changes for clarification, and makes some corrections. This amendment is prompted by additional reports of cracked blades and by the comments received in response to AD 2003–24–01. The actions specified in this AD are intended to detect fatigue cracking of the blade to prevent blade failure and subsequent loss of control of the helicopter.

DATES: Effective November 1, 2005. Comments for inclusion in the Rules Docket must be received on or before December 16, 2005.

ADDRESSES: Submit comments in triplicate to the Federal Aviation Administration (FAA), Office of the Regional Counsel, Southwest Region, Attention: Rules Docket No. 2004–SW–13–AD, 2601 Meacham Blvd., Room 663, Fort Worth, Texas 76137. You may also send comments electronically to the Rules Docket at the following address: *9-asw-adcomments@faa.gov.*

The service information referenced in this AD may be obtained from the following addresses: MD Helicopters Inc., Attn: Customer Support Division, 4555 E. McDowell Rd., Mail Stop M615, Mesa, Arizona 85215–9734, telephone 1–800–388–3378, fax 480–346–6813, or on the Web at *http://www.mdhelicopters.com* and Helicopter Technology Company, LLC, 12902 South Broadway, Los Angeles, CA 90061, telephone 310–523–2750, fax 310–523–2745.

FOR FURTHER INFORMATION CONTACT: John Cecil, Aviation Safety Engineer, FAA, Los Angeles Aircraft Certification Office, Airframe Branch, 3960 Paramount Blvd., Lakewood, California 90712–4137, telephone (562) 627–5228, fax (562) 627–5210.

SUPPLEMENTARY INFORMATION: On November 17, 2003, the FAA issued AD 2003–24–01, Amendment 39–13370 (68 FR 66004, November 25, 2003), to require recording TE and inspecting certain blades with 13,720 TEs and 750 hours TIS. The AD also requires replacing any cracked blade with an airworthy blade. Also, the AD revises the Limitations and Conditions of HTC, LLC, STC Nos. SR09172RC, SR09074RC, and SR09184RC by establishing life limits for certain part-numbered blades. The AD was prompted by reports of certain blades cracking due to a higher number of TEs per hour than originally calculated. This condition, if not corrected, could result in fatigue cracking of the blade, blade failure, and subsequent loss of control of the helicopter.

Interested persons were afforded an opportunity to participate in the making of AD 2003–24–01. The FAA received several comments from 10 commenters. We have given due consideration to the comments received.

One commenter, the manufacturer (MDHI), states the scope of the AD should be expanded to add the OH–6A designation immediately after the model to read ''Model 369A (OH–6A), H, etc.''

The FAA disagrees that we should add the Model OH–6A. We included STC No. SR09184RC and the Model 369A (OH–6A), H, HE, HM, and HS helicopters to AD 2003–24–01 in error. We have reviewed reports, summaries about rates of use, incident reports, certification data, weight limits, and other information from the manufacturer. These models may have the affected part-numbered blades installed. However, the data shows that even with a higher than expected number of TEs, these models have approved operating limitations that assume operations at maximum gross weight and are conservative enough to compensate for the higher TEs. We have received no reports of these blades cracking in the areas affected by this AD. These blades should reach their retirement lives based on hours TIS before the number of TEs results in cracks in the affected area. Also, we have determined that we should have included STC No. SR01050LA and the Model 369F, FF, 500N, and 600N helicopters in the AD applicability. Our data shows the unsafe condition addressed by this AD correlates to a flight profile with a higher number of TEs than expected during certification (six TEs per hour). The Model 369D, E, F, FF, 500N and 600N helicopters, with a higher gross weight limit, fit that profile. Therefore, we have determined that this AD should apply only to the Model 369D, E, F, FF, 500N and 600N helicopters.

Five commenters state the new definition of a TE in AD 2003–24–01 is inconsistent with the definition given in other ADs and in a service letter. One commenter, MDHI, states the new definition is likely to cause confusion.

The FAA agrees. The definition introduced in AD 2003–24–01 is inconsistent with previously issued ADs and could unnecessarily burden and confuse the operators. Therefore, we have changed the definition to make it consistent with the definition of a TE as that term is defined in AD 98–15–26, Amendment 39–10675, Docket 98–SW–22–AD. The TE definition in AD 98–15–26 is also consistent with the definition in MDHI Service Letter SL369H–132R1, SL369D–111R1, SL369E–063R1, SL369F–056R1, SL500N–008R1, and SL600N–005R1, dated May 15, 2001.

One commenter asks that the word ''reliably'' be added to the AD paragraph requiring operators to determine the number of TEs. The commenter states that FAA approved service information reads, ''operators who cannot reliably determine the actual number of TEs for a blade * * *.''

The FAA does not agree. The word ''reliably'' is subjective and does not assist operators in determining accumulated TEs. The requirement is that operators determine actual TEs or assume 13,720 accumulated TEs.

One commenter, MDHI, states the actions in the AD do not prevent cracks but mandate a 35-hour repetitive inspection to detect cracks before blade failure.

The FAA agrees. The AD wording is revised to read: ''The actions specified in this AD are intended to detect fatigue cracking to prevent * * *''

Four commenters do not agree with the blade inspection requirements. One commenter states the inspection is unnecessary. The four commenters state the use of a 10X or higher magnifying glass is unnecessary and that cracks have been found without the use of a magnifying glass. Three commenters ask if pilots can do the inspections instead of a mechanic.

The FAA disagrees and has determined the inspection is necessary because the affected blades on these model helicopters continue to crack. The manufacturer has not identified a permanent modification but has identified TE counting or replacing the blade as a corrective measure. The FAA has also determined that a 10X or higher magnifying glass is necessary to detect a chord-wise crack protruding from under the root fitting and doubler on the bottom-side of the blade to prevent blade failure because these cracks may not be detectable without a 10X magnifying glass until they are near failure. Current FAA policy does not allow pilots to do these inspections. Pilots may only perform simple visual checks authorized by the AD. Pilots may perform checks that do not require the use of tools, precision measuring equipment, training, pilot logbook endorsements, or the use of or reference to technical data not contained in the body of the AD. The inspection in the AD requires the use of a 10X or higher magnifying glass, which is not considered a simple visual check.

One commenter states that an eddy current inspection is effective in detecting cracks in the ''C'' channel of certain blades. The commenter states the FAA may want to consider having the manufacturer incorporate an eddy current inspection into the maintenance instructions for all blades.

The FAA does not agree that an eddy current inspection is necessary to detect a crack in the blade in the areas specified in this AD. We have determined the cracks can be detected in the specified areas by inspecting the blades using a 10X or higher magnifying glass.

Two commenters suggest the service bulletins and their amendments, created by MDHI and HTC, are adequate to address the unsafe condition. One of those commenters states that normally an AD is coordinated with the manufacturer who produces a service bulletin (SB) and the FAA backs it up with an AD stating the operators must comply. That commenter further states that the idea of an AD should be to address an issue the manufacturer is either unaware of or has not addressed.

The FAA is responsible for determining which portions, if any, of an SB to incorporate in an AD and any additional requirements necessary to correct the unsafe condition. Even though an SB may address an unsafe condition, an AD mandates compliance with the actions specified in the SB by all affected operators. While we generally seek technical information from the manufacturer, we neither solicit the manufacturer's assistance in drafting an AD nor its consent before issuing an AD. However, we do note in this AD that complying with certain portions of certain documents constitutes an approved alternative method of compliance for certain parts of this AD.

One commenter states that only a few companies consistently have cracked blades. That commenter suggests that we should look at those companies. The same commenter states an AD is not

needed because the maintenance manual criteria are sufficient to detect a cracked blade.

The FAA partially concurs with the commenter. The commenter is correct in that most cracked blades do appear to occur as a result of the operations of a relatively few operators. However, the affected blades from these relatively few operators may be placed on any of the affected model helicopters regardless of their previous use. Thus, the AD must include all affected model helicopters. Although we agree that the maintenance manual criteria are sufficient to detect a cracked blade, we do not agree that the AD is not needed. The AD requires determining and recording the number of TEs accumulated on each blade and provides the required time intervals to perform the inspections. We have determined the affected blades must be inspected to determine if a crack exists at the required TEs or hours TIS.

One commenter, MDHI, states that it disagrees that specific blade station inspections are any more meaningful than the area described as ''* * * around the root fitting, doubler and skin * * *.''

The FAA, upon reconsideration, agrees and no longer refers to the six blade stations because the reference is not necessary to identify the required inspection area.

One commenter, the blade manufacturer, HTC, states the instructions in paragraph (b)(2) of AD 2003–24–01 ''(parallel to the blade) from the center of the root fitting and lead lag attach bolt-holes closest to the trailing edge,'' are confusing. The commenter asks if the direction is perhaps ''span wise'' and states that the trailing edge of the blade is not relevant. The commenter also states the instructions will cause many operators to perform the inspection in the wrong areas.

The FAA included the specific measurements, reference points, and directions in paragraph (b)(2) of AD 2003–24–01 to provide the mechanic the location of the specific blade stations stated in HTC SB No. 2100–3R2. To simplify these instructions, we have decided to remove the specific locations from the AD and include a figure that depicts the blade inspection area.

Six commenters commented on the cost analysis stating the AD poses an economic burden on operators. One commenter states it will cause a hardship on the industry. Another commenter states it will not be economically feasible. Another commenter states the AD will put operators out of work and force them to switch to other aircraft types. Another commenter states the AD will cause an increase in paperwork. Another commenter asks what is the basis for the cost of the blades and the number of additional inspections. Another commenter states the economic impact should be redone using realistic blade rejections due to fatigue cracks.

While the FAA must consider the economic burdens caused by issuing an AD, the primary purpose of an AD is to correct an unsafe condition. We did, however, reassess the cost analysis as a result of the comments. Therefore, we are assuming a total of 9000 TE inspections and blade replacements will be required for 10 percent of the fleet. Also, we have determined the paperwork costs will be negligible.

A commenter, HTC, states the AD establishes life limits for certain blades that already have published service lives, the action is FAA approved, and the life limits are contained in Maintenance Manual HTCM–001.

The FAA agrees with the commenters statements. When the life limits were originally issued, they were inadvertently omitted from the Limitations and Conditions of HTC, LLC, STC Nos. SR09172RC, SR01050LA, and SR09184RC. The STCs were amended and now include the life limits. However, the life limits can only be established in an AD because a change to a life limit appearing only in a manual or on type certificate data sheets, even if FAA-approved, does not require compliance by the pilot or operator. To be legally required, the change must be made through an AD. We are addressing the issue of establishing life limits in another AD. Therefore, the paragraph establishing life limits is excluded from this AD.

A commenter, HTC, notes the AD states that this proposal is prompted by several reports. The commenter states there are two known reports, both from the same Canadian operator, and they received only one of those two reports.

The FAA agrees there were two reports when AD 2003–24–01 was issued, and we also note that we inadvertently called the ''action'' required by the AD a ''proposal''. However, since the AD was issued, we have received additional reports. We have reviewed a total of five reports in making our decision to issue this AD.

Three commenters question the statement in AD 2003–24–01, paragraph (a)(2), about recording the total number of TEs. One commenter asks whether the AD intent is to require that the pilots land or record the 100 TEs by taking their hands off the controls. Another commenter wants to know the basis for the 100 external lifts. Another commenter states that requiring the operator to record TEs after 100 external lifts will add a burden and a penalty to the operator in having to land and record the TEs. That same commenter suggests that they be allowed to record TE at the end of daily operations.

The FAA partially agrees with the comments. The AD does not dictate the flight profile of the helicopter when recording TEs. It's up to the operator to record the TEs. The time required to record the number of TEs is a negligible burden. The basis for our initial assessment was that in any given day there would be 100 external lift operations. We have since determined the use of 100 external lift operations is not realistic given that some operators often exceed that number before a single day of operation. Therefore, after additional analysis, we have determined that recording the TEs at the end of each day's operation or on or before accumulating an additional 200 TEs, whichever occurs first, is sufficient.

One commenter states that AD 98–15–26 requires recording unknown TEs using a formula to determine TE against TIS. In AD 2003–24–01, the operator must assume a penalty of 13,720 TEs for blades with unknown TEs. The commenter expresses concern that at some future date, the FAA will decide that these HTC blades must be retired at a similar TE as the MD blades now have. The commenter further states that this could cost operators about $44,000,000.

The FAA has determined that because of the critical nature of the unsafe condition, the formula for TEs as required in AD 98–15–26 would not adequately address the unsafe condition. While we cannot rule out further AD action related to this unsafe condition, any such action would require justification and consideration of the financial impact of that action.

One commenter states the paragraph in the preamble of the AD that begins with the statement, ''This unsafe condition is likely to exist or develop on other helicopters * * *'' seems to indicate that only HTC-built blades could cause the condition.

The FAA issues an AD when it believes there is an unsafe condition in a product and that an unsafe condition is likely to exist or develop in other products of the same type design. In AD 2003–24–01, the unsafe condition was identified as fatigue cracking of the part-numbered blades listed in the ''applicability'' section and installed as part of the three listed STCs. These helicopter models, listed in the ''applicability section'' with the affected blades installed, are susceptible to fatigue cracking of the blades. These

blades include both MDHI and HTC blades. Therefore, this AD retains similar wording for the revised model helicopters and STCs for helicopters with blades installed, which are susceptible to fatigue cracking.

One commenter, HTC, states the comment period for an NPRM is 1 year. The commenter asks why is this AD so urgent when the FAA was so unconcerned before. The same commenter also states that they requested an NPRM more than 16 months ago.

The FAA comment period for an NPRM is usually 60 days. We issued AD 2003–24–01 as a final rule; request for comments with a typical 60-day comment period. Since the original incident, we have been evaluating the reports and data as it becomes available to determine the necessary corrective action. In addition to the reports of cracked blades that prompted the AD, we have received additional reports of cracked blades. We have determined that this critical unsafe condition and the short compliance time to correct it require an immediate AD.

Two commenters suggest the January 26, 2003, date for receipt of comments for inclusion in the rules docket may be a typographical error.

The FAA agrees the date was a typographical error and should have been January 26, 2004.

Finally, two commenters state the FAA should include and cross-reference the blades specified in the HTC and MDHI SBs so that operators understand that the new AD affects both HTC and MDHI part number (P/N) blades.

The FAA agrees. In this AD, we include both MDHI and HTC part-numbered blades and cross-reference the part numbers and the STCs to clearly show the affected helicopters, blades, and STC's.

Since issuing AD 2003–24–01, the FAA has reviewed MDHI SB369H–245R2, SB369E–095R2, SB500N–023R2, SB369D–201R2, SB369F–079R2, SB600N–031R2, dated February 4, 2004. The SB contains information about the blade TEs and determining an inspection interval. Also, the SB lists certain MDHI helicopter models and HTC and MDHI blade part numbers.

HTC superseded Mandatory Notice No. 2100–3R2, dated December 20, 2002, with Notice No. 2100–3R3, dated January 5, 2004. Notice No. 2100–3R3 contains information about blade TE inspections and determining an inspection interval. The notice references the information contained in MDHI CSP–HMI–2, Section 62–10–00, Main Rotor Blade Torque Event Inspection. Also, Notice No. 2100–3R3 ''revises the model effectivity and the scope of the additional inspection with a 10X glass.''

Also since issuing AD 2003–24–01, the FAA determined that STC SR09184RC approves the installation of blades, P/N 500P2100–301 and –303, only, on the MDHI 369A, H, HE, HM, and HS model helicopters. Based on our determination, this AD will not apply to these five model helicopters. Likewise, the AD will not apply to STC SR09184RC and blades, P/N 500P2100–301 and –303. However, we will establish life limits for these blades in a subsequent AD.

Also, after further review of the service information, the FAA has determined that helicopters modified under STC SR01050LA, STC SR09172RC, and STC SR09074RC may have the affected blades installed. Therefore, they are included in the applicability of this AD.

In addition, since issuing AD 2003–24–01, the FAA has received three additional reports of incidents of cracked blades in 2004 and 2005. A preliminary evaluation of the cracked blades continues to indicate that the cracking is related to a high number of TEs accumulated by the blades. None of the blades identified in incident reports that caused the FAA to publish AD 2003–24–01 or this final rule involved helicopters modified with STC SR09184RC. Therefore, exclusion of STC SR09184RC is appropriate because none of the blades used in that modification, based on a review of technical data and accident records, should be affected by this AD.

An unsafe condition is likely to exist or develop on other Model 369D, 369E, 369F, 369FF, 500N, and 600N helicopters of these same type designs modified with an HTC STC No. SR09172RC, SR09074RC, or SR01050LA. Therefore, this AD supersedes AD 2003–24–01 to require:

- On or before the next 50-hours time-in-service (TIS), unless accomplished previously, determine and record the number of TEs accumulated on each blade. A TE is the transition to a hover from forward flight or any external lift operation. Each transition to a hover from forward flight is recorded as a TE, and any external lift operation is recorded as two TEs. Forward flight is considered to be flight at any airspeed (or direction) after attaining translational lift. If you cannot determine the number of TEs, assume 13,720. Continue to record the number of TEs accumulated (actual usage) throughout the life of the blades and the hours TIS. On or before accumulating an additional 200 TEs or at the end of each day's operation, whichever occurs first, record and update the accumulated TEs total.
- For each blade that has accumulated 13,720 or more TEs and 750 or more hours TIS, before further flight, unless accomplished previously, and thereafter at intervals not to exceed 200 TEs or 35 hours TIS, whichever occurs first, perform a main rotor blade torque event inspection.
- If a crack is found, replace the blade with an airworthy blade before further flight.

The short compliance time involved is required because the previously described critical unsafe condition can adversely affect the controllability and structural integrity of the helicopter. Some operators not affected by AD 2003–24–01 may have already exceeded the 13,720 TEs and 750 hours TIS. Therefore, based on the high usage rate of some of these model helicopters, the 35-hour TIS or 200 TE inspections may occur in a short time span, and this AD must be issued immediately.

Since a situation exists that requires the immediate adoption of this regulation, it is found that notice and opportunity for prior public comment hereon are impracticable, and that good cause exists for making this amendment effective in less than 30 days.

The FAA estimates that this AD will:

- Affect 886 helicopters of U.S. registry;
- Take about 1 work hour per helicopter for inspecting blades, assuming 9000 TE inspections for 10 percent of the fleet, at an average labor rate of $65 per work hour;
- Cost about $50,000 for one set of blades (on condition), assuming 10 percent of the fleet has blades that are replaced; and
- Have paperwork costs that are negligible.

Based on these figures, we estimate the total cost impact of the AD on U.S. operators is $56,261,000, assuming 10 percent of the fleet is affected.

Comments Invited

Although this action is in the form of a final rule that involves requirements affecting flight safety and, thus, was not preceded by notice and an opportunity for public comment, comments are invited on this rule. Interested persons are invited to comment on this rule by submitting such written data, views, or arguments as they may desire. Communications should identify the Rules Docket number and be submitted in triplicate to the FAA, Office of the Regional Counsel, Southwest Region, 2601 Meacham Blvd., Room 663, Fort Worth, Texas. All communications

received on or before the closing date for comments will be considered, and this rule may be amended in light of the comments received. Factual information that supports the commenter's ideas and suggestions is extremely helpful in evaluating the effectiveness of the AD action and determining whether additional rulemaking action would be needed.

Comments are specifically invited on the overall regulatory, economic, environmental, and energy aspects of the rule that might suggest a need to modify the rule. All comments submitted will be available in the Rules Docket for examination by interested persons. A report that summarizes each FAA-public contact concerned with the substance of this AD will be filed in the Rules Docket.

Commenters wishing the FAA to acknowledge receipt of their mailed comments submitted in response to this rule must submit a self-addressed, stamped postcard on which the following statement is made: ''Comments to Docket No. 2004–SW–13–AD.'' The postcard will be date stamped and returned to the commenter.

Regulatory Findings

The regulations adopted herein will not have a substantial direct effect on the States, on the relationship between the national Government and the States, or on the distribution of power and responsibilities among the various levels of government. Therefore, it is determined that this final rule does not have federalism implications under Executive Order 13132.

The FAA has determined that this regulation is an emergency regulation that must be issued immediately to correct an unsafe condition in aircraft, and that it is not a ''significant regulatory action'' under Executive Order 12866. It has been determined further that this action involves an emergency regulation under DOT Regulatory Policies and Procedures (44 FR 11034, February 26, 1979). If it is determined that this emergency regulation otherwise would be significant under DOT Regulatory Policies and Procedures, a final regulatory evaluation will be prepared and placed in the Rules Docket. A copy of it, if filed, may be obtained from the Rules Docket at the location provided under the caption **ADDRESSES.**

Authority for This Rulemaking

Title 49 of the United States Code specifies the FAA's authority to issue rules on aviation safety. Subtitle I, section 106, describes the authority of the FAA Administrator. Subtitle VII, Aviation Programs, describes in more detail the scope of the Agency's authority.

We are issuing this rulemaking under the authority described in subtitle VII, part A, subpart III, section 44701, ''General requirements.'' Under that section, Congress charges the FAA with promoting safe flight of civil aircraft in air commerce by prescribing regulations for practices, methods, and procedures the Administrator finds necessary for safety in air commerce. This regulation is within the scope of that authority because it addresses an unsafe condition that is likely to exist or develop on products identified in this rulemaking action.

List of Subjects in 14 CFR Part 39

Air transportation, Aircraft, Aviation safety, Safety.

Adoption of the Amendment

■ Accordingly, pursuant to the authority delegated to me by the Administrator, the Federal Aviation Administration amends part 39 of the Federal Aviation Regulations (14 CFR part 39) as follows:

PART 39—AIRWORTHINESS DIRECTIVES

■ 1. The authority citation for part 39 continues to read as follows:

Authority: 49 U.S.C. 106(g), 40113, 44701.

§ 39.13 [Amended]

■ 2. Section 39.13 is amended by removing Amendment 39–13370 (68 FR 66004, November 25, 2003), and by adding a new airworthiness directive (AD), Amendment 39–14340, to read as follows:

2005–21–02 MD Helicopters, Inc.: Amendment 39–14340. Docket No. 2004–SW–13–AD. Supersedes AD 2003–24–01, Amendment 39–13770, Docket No. 2003–SW–16–AD.

Applicability: Models 369D, 369E, 369F, 369FF, 500N, or 600N with either an MD Helicopter, Inc. (MDHI) main rotor blade (blade) installed or modified with Helicopter Technology Company, LLC (HTC), Supplemental Type Certificate (STC) No. SR09172RC, SR09074RC, or SR01050LA with an HTC blade installed as listed in the following table, certificated in any category:

Helicopter model	MDHI blade part No. (P/N)	HTC blade P/N	HTC STC Nos.
369D	369D21100 Basic, –516, –517, –523	500P2100–BSC, –BSC–1	SR09172RC
369E	369D21120–501, –503	500P2100–101, –103	SR09074RC
369F, FF	369D21102 Basic, –503, –517, –523 369D21121–501, –503	500P2300–501, –503	SR01050LA
500N	369D21102–503, –517, –523 369D21121–501, –503	500P2300–501, –503	SR01050LA
600N	369D21102–517, –523 369D21121–501, –503	500P2300–501, –503	SR01050LA

Note 1: The terms ''BSC'' and ''Basic'' are interchangeable when identifying blades produced by MDHI and HTC.

Compliance: Required as indicated.

To detect fatigue cracking of the blade to prevent blade failure and subsequent loss of control of the helicopter, accomplish the following:

(a) On or before the next 50 hours time-in-service (TIS), unless accomplished previously:

(1) Determine and record the number of torque events accumulated on each blade. A torque event (TE) is the transition to a hover from forward flight or any external lift operation. Each transition to a hover from forward flight is recorded as a TE, and any external lift operation is recorded as two TEs. Forward flight is considered to be flight at any airspeed (or direction) after attaining translational lift. If you cannot determine the number of TEs, use 13,720 TEs.

(2) Continue to record the number of TEs accumulated (actual usage) throughout the life of the blades along with hours TIS. On or before accumulating an additional 200 TEs or at the end of each day's operations, whichever occurs first, record and update the accumulated TEs total.

(b) For each blade that has accumulated 13,720 or more TEs and 750 or more hours TIS, before further flight, unless accomplished previously, and thereafter at intervals not to exceed 200 TEs or 35 hours TIS, whichever occurs first, perform a main rotor blade torque event inspection.

Note 2: MD Helicopters, Inc. Maintenance Manual CSP–HMI–2, Revision 36, section 62–10–00, paragraph 8, Main Rotor Blade Torque Event Inspection, pertains to the subject of this AD.

(c) If a crack is found, replace the blade with an airworthy blade before further flight.

Note 3: MDHI Maintenance Manual CSP–HMI–2, Section 20–30–00 Main Rotor Blade Painting pertains to the subject of this AD. This section of the maintenance manual recommends painting the inboard 24 inches (not to be exceeded) of the blade gloss white to aid in detecting a crack; and if this is done, painting all blades alike and rebalancing them.

Note 4: TEs are used only to establish an additional inspection interval and not to establish an alternative retirement life.

(d) To request a different method of compliance or a different compliance time for this AD, follow the procedures in 14 CFR 39.19. Contact the Los Angeles Aircraft Certification Office, Transport Airplane Directorate, for information about previously approved alternative methods of compliance.

Note 5: Complying with the inspection procedures in the Accomplishment Instructions, paragraphs 2.B.(2). and 2.B.(3)., of MD Helicopter Inc. Service Bulletin (SB) SB369H–245R2, SB369E–095R2, SB500N–023R2, SB369D–201R2, SB369F–079R2, SB600N–031R2, dated February 4, 2004, constitutes an approved alternative method of conducting the inspection required by paragraph (b) of this AD.

Note 6: Complying with the Inspection Instructions procedures in paragraphs 2 and 3 of HTC Mandatory SB, Notice No. 2100–3R3, dated January 5, 2004, constitutes an approved alternative method of conducting the inspection required by paragraph (b) of this AD.

(e) This amendment becomes effective on November 1, 2005.

Issued in Fort Worth, Texas, on October 7, 2005.

David A. Downey,

Manager, Rotorcraft Directorate, Aircraft Certification Service.

[FR Doc. 05–20678 Filed 10–14–05; 8:45 am]

BILLING CODE 4910–13–P

DEPARTMENT OF TRANSPORTATION

Federal Aviation Administration

14 CFR Part 39

[Docket No. 96–ANE–35–AD; Amendment 39–14339; AD 2005–21–01]

RIN 2120–AA64

Airworthiness Directives; Pratt & Whitney JT8D–200 Series Turbofan Engines

AGENCY: Federal Aviation Administration (FAA), DOT.

ACTION: Final rule.

SUMMARY: This amendment supersedes an existing airworthiness directive (AD) that applies to Pratt & Whitney (PW) JT8D–200 series turbofan engines. That AD currently requires installing and periodically inspecting individual or sets of certain part number (P/N) temperature indicators on the No. 4 and 5 bearing compartment scavenge oil tube and performance of any necessary corrective action. This AD requires installing and periodically inspecting two temperature indicators on all PW JT8D–200 series turbofan engines, including those incorporating high pressure turbine (HPT) containment hardware. This AD results from five uncontained HPT shaft failures. We are issuing this AD to prevent oil fires and the resulting fracture of the HPT shaft which can result in uncontained release of engine fragments; engine fire; in-flight engine shutdown; and possible airplane damage.

DATES: This AD becomes effective November 21, 2005. The Director of the Federal Register approved the incorporation by reference of certain publications listed in the regulations as of November 21, 2005.

ADDRESSES: You can get the service information identified in this AD from Pratt & Whitney, 400 Main St., East Hartford, CT 06108; telephone (860) 565–7700, fax (860) 565–1605.

You may examine the AD docket at the FAA, New England Region, Office of the Regional Counsel, 12 New England Executive Park, Burlington, MA. You may examine the service information, at the FAA, New England Region, Office of the Regional Counsel, 12 New England Executive Park, Burlington, MA.

FOR FURTHER INFORMATION CONTACT: Keith Lardie, Aerospace Engineer, Engine Certification Office, FAA, Engine and Propeller Directorate, 12 New England Executive Park, Burlington, MA 01803–5299; telephone (781) 238–7189, fax (781) 238–7199.

SUPPLEMENTARY INFORMATION: The FAA proposed to amend 14 CFR part 39 by superseding AD 97–19–13, Amendment 39–10134 (62 FR 49135, September 19, 1997). The proposed AD applies to PW JT8D–200 series turbofan engines. We published the proposed AD in the **Federal Register** on September 29, 2004 (69 FR 58099). That action proposed to require installing and periodically inspecting two P/N 810486 temperature indicators on all PW JT8D–200 series turbofan engines, including those incorporating HPT containment hardware. Thirteen HPT shaft fractures resulted in five uncontained HPT shaft failures. The HPT shafts fractured through the No. 4½ oil return holes due to oil fires within the No. 4 and 5 bearing compartment.

Examining the AD Docket

You may examine the AD Docket (including any comments and service information), by appointment, between 8 a.m. and 4:30 p.m., Monday through Friday, except Federal holidays. See **ADDRESSES** for the location.

Comments

We provided the public the opportunity to participate in the development of this AD. We have considered the comments received.

Concerns Over Considering the Engine Unserviceable

Four commenters state that an engine should not be considered unserviceable and the engine removed from service if both temperature indicators are missing. The commenters state that we should allow installing new temperature indicators followed by a ground diagnostic test before further flight.

One of those commenters states that considering the engine unserviceable imposes an undue hardship on operators. If one of the indicators is missing, PW Alert Service Bulletin (ASB) No. JT8D A5944 requires that the engine be tested using specific instructions to determine its serviceability and the engine be dispositioned accordingly. The theory used for one indicator missing is that the serviceability of the engine is now questionable and the engine must be proven serviceable before it can be returned to service. The commenter further states that any time engine serviceability is in question, it must be proven and cannot be assumed. Requiring operators to remove the engine from service, simply because both of the indicators are missing, forces operators into a position without recourse. The commenter further states that this is the same condition already covered when one indicator is missing. The procedure to determine serviceability for both indicators missing should follow the procedure for one indicator missing but with minor changes.

We agree. We have changed the compliance section of the AD to allow a ground diagnostic test before further flight if both temperature indicators are missing.

AD Instructions Not Clear

One commenter states that the AD instructions for a missing indicator are not clear. The instructions for one indicator missing assume that the missing indicator has a red window that has turned black. The commenter asks if the yellow window of the missing indicator should be assumed to be normal color or black. The condition of the remaining indicator would make a difference as to whether a diagnostic

test may be run or if the engine must be removed.

We agree. PW supplied better instructions in Revision 5 to PW ASB No. JT8D A5944, which we incorporated by reference. For troubleshooting purposes, any missing temperature indicator is assumed to have the same indication as the remaining temperature indicator. Therefore, the results of the visual inspection of the one remaining temperature indicator should be doubled. This should minimize operator impact due to false indications.

Follow-Up Inspection Requirements Too Restrictive

One commenter states the follow-up inspection requirements for certain conditions are too restrictive. In the cases where the proposed requirements state to check the temperature indicators following every flight should be eased to require a check of the temperature indicators once a day. The commenter feels that the economic burden of checking the indicators following every flight outweighs the risk.

We disagree. An indicator with a black window probably is a sign of an impending problem with the engine. The typical progression for the indicator windows to change from normal tan color to black is as follows: One yellow, two yellow, or two yellow with one or two red windows. Any combination other than this progression is not expected and would signal that the reliability of the engine is in question. For example, if both red windows, which are rated about 50 degrees Fahrenheit hotter than the yellow windows, have turned black, but none of the yellow windows have turned black, a problem may exist with the indicator installation, or hot air might be impinging from a stuck carbon seal. A ground diagnostic test cannot accurately reproduce the symptom of a stuck carbon seal. In one case following an indication of one yellow window and one red window turned black, a shaft fracture occurred only two cycles after a visual inspection, despite engine diagnostic test and other troubleshooting. This type of failure will occur quickly, which is why intensive inspections are required.

Use of Dual-Window Temperature Indicators

One commenter agrees with the proposed AD that dual-window temperature indicators should be used and sealed to minimize false indications. The commenter further states that in a situation where hot air impingement or indicator contamination is determined to cause a false indication, a ground diagnostic test should be allowed to return the engine to service.

We partially agree. In most cases, operators will be unable to show that the source of black windows seen during a visual inspection is indicator contamination or hot air impingement. Operators must follow all of the manufacturer's instructions for installation of temperature indicators to minimize false indications.

Troubleshooting On-Wing

Two commenters disagree with the last two dispositions in the table for Visual Inspection of Dual Window Indications, in Alert Service Bulletin (ASB) No. A5944, Revision 4, dated April 8, 2004. Those dispositions state to remove the engine, whereas the other dispositions in the table allow for troubleshooting the engine on-wing. The commenter states that troubleshooting for false indications should be also allowed for these two dispositions. Hot air impingement could be more likely due to close proximity to sources of contamination and would lead to false indications. The commenter did not supply any data or field experience to support the concern.

We disagree. The new mandatory sealing instructions for the temperature indicators will prevent most false indications. An indicator combination of two yellow windows turned black with at least one red window turned black is not more likely a result of contamination due to hot air impingement than any other situation involving indicators showing at least one black window. If one properly installs the temperature indicators, the last two dispositions involving temperature indicators with black windows probably are a sign of a significant engine problem. Since uncontained HPT shaft fractures continue to occur, a more conservative approach is necessary to prevent their future occurrence.

Use of an Immersion Thermocouple

One commenter feels that an immersion thermocouple should be allowed for all situations in which a window of a temperature indicator has turned black.

We disagree. An immersion thermocouple provides a more accurate reading of temperature. However, an immersion thermocouple can only be used during ground diagnostic tests and may not help detect in-flight issues that cannot be reproduced on the ground, such as a stuck carbon seal. We did not change the AD.

Alert Service Bulletin Is Too Precise

One commenter states that paragraph 1.B of the Accomplishment Instructions of PW ASB No. A5944, Revision 4, dated April 8, 2004, is too precise for otherwise inaccurate temperature indicator measurements. The commenter states that the ASB requires diagnostic tests in intervals from before further flight to 10, 20, or 25 hours or cycles.

We disagree. We used past failure event field data to establish diagnostic testing intervals. Temperature indicators, although they do not provide an absolute temperature indication, are an effective method of determining the health of the scavenge system. Requiring a full ground diagnostic test every 65 hours would be an unnecessary economic burden for the operators. Therefore, for different indicator conditions, depending on the severity of the indications, different follow-on testing requirements are appropriate.

Concerns With ASB Instructions

One commenter states that the ASB instructions for manufacture of the thermocouple are inaccurate and incomplete in some areas, and too detailed in other areas. The instructions specify too long a thermocouple and provide no sealing instructions to prevent oil from leaking past the thermocouple. The instructions also are so detailed for drilling the chip detector, that the operator is left few other options. The commenter further states that PW should not mandate the brand of thermocouple. The commenter feels that operators should be given the intent of the design specifications for installing a thermocouple, and be given flexibility to choose their own installation based on these requirements.

We agree. PW has revised the instructions for the thermocouple, which are in ASB No. JT8D A5944, Revision 5, dated October 3, 2005.

Equivalent Parts

One commenter states that the use of equivalent parts to temperature indicator, PW P/N 810486, should be permitted. A parts manufacturer approval (PMA)-equivalent, P/N 3641, is available. The commenter also requests that the AD wording be changed so that it does not imply that the OEM is the only supplier of an approved temperature indicator for this AD.

We partially agree. PMA parts are acceptable. But presently only one, PMA P/N 3641, is available as a substitute for PW P/N 810486. We changed the AD to include this PMA-equivalent.

Other Changes to the Compliance Section for Clarification

Several commenters suggest that the Compliance section is unclear. We agree that it could be clearer. We changed the Compliance section to clarify the procedures.

Conclusion

We have carefully reviewed the available data, including the comments received, and determined that air safety and the public interest require adopting the AD with the changes described previously. We have determined that these changes will neither increase the economic burden on any operator nor increase the scope of the AD.

Costs of Compliance

There are about 2,345 PW JT8D–200 series turbofan engines of the affected design in the worldwide fleet. We estimate that 1,143 engines installed on airplanes of U.S. registry would be affected by this AD. We also estimate that it would take about 1 work hour per engine to perform the actions, and that the average labor rate is $65 per work hour. Required parts would cost about $37 per engine. Based on these figures, we estimate the total cost of the AD to U.S. operators to be $116,586.

Authority for This Rulemaking

Title 49 of the United States Code specifies the FAA's authority to issue rules on aviation safety. Subtitle I, Section 106, describes the authority of the FAA Administrator. Subtitle VII, Aviation Programs, describes in more detail the scope of the Agency's authority.

We are issuing this rulemaking under the authority described in Subtitle VII, Part A, Subpart III, Section 44701, ''General requirements.'' Under that section, Congress charges the FAA with promoting safe flight of civil aircraft in air commerce by prescribing regulations for practices, methods, and procedures the Administrator finds necessary for safety in air commerce. This regulation is within the scope of that authority because it addresses an unsafe condition that is likely to exist or develop on products identified in this rulemaking action.

Regulatory Findings

We have determined that this AD will not have federalism implications under Executive Order 13132. This AD will not have a substantial direct effect on the States, on the relationship between the National Government and the States, or on the distribution of power and responsibilities among the various levels of government.

For the reasons discussed above, I certify that this AD:

(1) Is not a ''significant regulatory action'' under Executive Order 12866;

(2) Is not a ''significant rule'' under DOT Regulatory Policies and Procedures (44 FR 11034, February 26, 1979); and

(3) Will not have a significant economic impact, positive or negative, on a substantial number of small entities under the criteria of the Regulatory Flexibility Act.

We prepared a summary of the costs to comply with this AD and placed it in the AD Docket. You may get a copy of this summary by sending a request to us at the address listed under **ADDRESSES.** Include ''AD Docket No. 96–ANE–35–AD'' in your request.

List of Subjects in 14 CFR Part 39

Air transportation, Aircraft, Aviation safety, Incorporation by reference, Safety.

Adoption of the Amendment

■ Accordingly, under the authority delegated to me by the Administrator, the Federal Aviation Administration amends 14 CFR part 39 as follows:

PART 39—AIRWORTHINESS DIRECTIVES

■ 1. The authority citation for part 39 continues to read as follows:

Authority: 49 U.S.C. 106(g), 40113, 44701.

§ 39.13 [Amended]

■ 2. The FAA amends § 39.13 by removing Amendment 39–10134 (62 FR 49135, September 19, 1997) and by adding the following new airworthiness directive:

2005–21–01 Pratt & Whitney: Amendment 39–14339. Docket No. 96–ANE–35–AD.

Effective Date

(a) This airworthiness directive (AD) becomes effective November 21, 2005.

Affected ADs

(b) This AD supersedes AD 97–19–13, Amendment 39–10134.

Applicability

(c) This AD applies to Pratt & Whitney (PW) JT8D–200 series turbofan engines. These engines are installed on, but not limited to, McDonnell Douglas MD–80 series and Boeing 727 series airplanes.

Unsafe Condition

(d) This AD results from five uncontained high pressure turbine (HPT) shaft failures out of thirteen HPT shaft fractures due to oil fires in the No. 4 and 5 bearing compartments. We are issuing this AD to prevent oil fires; fracture of the HPT shaft which can result in uncontained release of engine fragments; engine fire; in-flight engine shutdown; and possible airplane damage.

Compliance

(e) You are responsible for having the actions required by this AD performed within the compliance times specified unless the actions have already been done.

Installation of the Dual-Window Temperature Indicators

(f) Install two dual-window temperature indicators on the No. 4 bearing compartment scavenge oil tubes of PW JT8D–200 series turbofan engines within 90 days after the effective date of this AD.

(1) Use paragraph 1.A. of the Accomplishment Instructions of PW Alert Service Bulletin (ASB) No. JT8D A5944, Revision 5, dated October 3, 2005, to install the temperature indicators.

(2) The use of part manufacturer approval (PMA)-equivalent temperature indicators, P/N 3641, made by Telatemp Corporation, is acceptable.

Initial Visual Inspection of the Dual-Window Temperature Indicators

(g) Perform initial visual inspection of the dual-window temperature indicators installed in paragraph (f) of this AD within 65 hours time-in-service (TIS) since installation.

(h) If the color of any temperature indicator window has turned black, perform troubleshooting, diagnostic testing, and corrective action as required, using paragraph 1.B. of the Accomplishment Instructions of PW ASB No. JT8D A5944, Revision 5, dated October 3, 2005.

(i) If any temperature indicators are missing:

(1) If one temperature indicator is missing, inspect the remaining temperature indicator and perform troubleshooting, diagnostic testing, and corrective action as required, using Paragraph B.2. of the Accomplishment Instructions of PW ASB No. JT8D A5944, Revision 5, dated October 3, 2005.

(2) If both temperature indicators are missing:

(i) Perform troubleshooting, diagnostic testing, and corrective action as required, using Figure 2 of the Accomplishment Instructions of PW ASB No. JT8D A5944, Revision 5, dated October 3, 2005.

(ii) Perform both engine diagnostic tests as specified in Figure 3 and Figure 4 of the Accomplishment Instructions of PW ASB No. JT8D 5944, Revision 5, dated October 3, 2005.

(iii) If the engine fails the diagnostic tests for red indicators, do not perform the test for yellow indicators. Remove the engine from service.

(3) If the test results show an oil overtemperature condition, remove the engine from service.

(4) If the test results show no oil overtemperature condition:

(i) Replace any temperature indicator that has turned black as specified in paragraph (h) of this AD; and

(ii) Replace any temperature indicator that is missing as specified in paragraph (i) of this AD; and

(iii) Return the engine to service, and inspect as specified in paragraph (g) of this AD.

Repetitive Visual Inspection of the Dual-Window Temperature Indicators

(j) Perform repetitive visual inspections of the dual-window temperature indicators installed in paragraph (f) of this AD within 65 hours TIS since-last-inspection. Use paragraph (h) of this AD to inspect the temperature indicators.

Requirements for Thermocouple Installation for On-Wing Diagnostic Test

(k) The requirements for thermocouple installation are listed in Appendix B of PW ASB No. JT8D A5944, Revision 5, dated October 3, 2005.

On-Wing Diagnostic Test Information

(l) To perform the on-wing diagnostics test, use Appendix C of PW ASB No. JT8D A5944, Revision 5, dated October 3, 2005.

Material Incorporated by Reference

(m) You must use Pratt & Whitney Alert Service Bulletin No. JT8D A5944, Revision 5, dated October 3, 2005, to perform the inspections and tests required by this AD. The Director of the Federal Register approved the incorporation by reference of this service bulletin in accordance with 5 U.S.C. 552(a) and 1 CFR part 51. You can get a copy from Pratt & Whitney, 400 Main St., East Hartford, CT 06108; telephone (860) 565–7700, fax (860) 565–1605. You can review copies at the FAA, New England Region, Office of the Regional Counsel, 12 New England Executive Park, Burlington, MA; or at the National Archives and Records Administration (NARA). For information on the availability of this material at NARA, call 202–741–6030, or go to: *http://www.archives.gov/federal-register/cfr/ibr-locations.html.*

Related Information

(n) None.

Issued in Burlington, Massachusetts, on October 3, 2005.

Francis A. Favara,

Acting Manager, Engine and Propeller Directorate, Aircraft Certification Service.

[FR Doc. 05–20501 Filed 10–14–05; 8:45 am]

BILLING CODE 4910–13–P

DEPARTMENT OF THE TREASURY

Internal Revenue Service

26 CFR Part 801

[TD 9227]

RIN 1545–BE46

Balanced System for Measuring Organizational and Employee Performance Within the Internal Revenue Service

AGENCY: Internal Revenue Service (IRS), Treasury.

ACTION: Final and temporary regulations.

SUMMARY: This document contains final and temporary regulations relating to the balanced system for measuring organizational and employee performance within the IRS. The temporary regulations prospectively amend the existing final regulations in 26 CFR part 801 to clarify when quantity measures, which are not tax enforcement results, may be used in measuring organizational and employee performance. The portions of this document that are final regulations provide necessary cross-references to the temporary regulations. These regulations affect internal operations of the IRS and the systems it employs to evaluate the performance of organizations within the IRS. The text of the temporary regulations also serves as the text of proposed regulations set forth in the Proposed Rules section in this issue of the **Federal Register**.

DATES: *Effective Date:* These regulations are effective on October 17, 2005.

Applicability Date: For dates of applicability, see §§ 801.7 and 801.8T.

FOR FURTHER INFORMATION CONTACT: Neil Worden, (202) 283–7900 (not a toll-free number).

SUPPLEMENTARY INFORMATION:

Background

This document amends final regulations in 26 CFR part 801 (the Final Regulations) that implement the Balanced System for Measuring Organizational and Employee Performance within the IRS. The Final Regulations were published in the **Federal Register** on August 6, 1999 (64 FR 42834–42837). The Final Regulations emanated from section 1201 of the Internal Revenue Service Restructuring and Reform Act of 1998, Public Law 105–206, 112 Stat. 685, 713 (1998) (the Act), which required the IRS to establish a performance management system for those employees covered by 5 U.S.C. 4302 that, among other things, establishes ''goals or objectives for individual, group, or organizational performance (or any combination thereof), consistent with the IRS' performance planning procedures, including those established under the Government Performance and Results Act of 1993, division E of the Clinger-Cohen Act of 1966 * * *, Revenue Procedure 64–22 * * *, and taxpayer service surveys.'' Section 1201 further required the IRS to use ''such goals and objectives to make performance distinctions among employees or groups of employees,'' and to use ''performance assessments as a basis for granting employee awards, adjusting an employee's rate of basic pay, and other appropriate personnel actions * * *.''

In addition, section 1201 of the Act required that the IRS performance management system comply with section 1204, which prohibits the use of ''records of tax enforcement results'' (ROTERs) in the evaluation of IRS employees or to suggest or impose production goals for such employees. Section 1204, however, does not prohibit the use of quantity measures in evaluating organizational and employee performance. The temporary regulations in this document amend the existing regulations in part 801 to clarify when quantity measures may be used in measuring organizational and employee performance.

Explanation of Provisions

The final regulations provide guidance and direction for the establishment of a balanced performance measurement system for the IRS. The three elements of this balanced measurement system are (1) customer satisfaction measures, (2) employee satisfaction measures and (3) business results measures. These organizational measures may be used to evaluate the performance of, or to impose or suggest production goals for, any organizational unit.

The temporary regulations contained in this document relate primarily to the business results measures. Business results are measured through quality measures and quantity measures. Quality measures are based on reviews of a statistically valid sample of cases handled by certain organizational units such as examination, collection and Automated Collection System units. The quality review of other work units is determined according to criteria established by the Commissioner or his delegate.

The IRS and Treasury Department have determined that the provisions of the existing part 801 regulations that limit the use of quantity measures in evaluating organizational units and imposing or suggesting production goals for employees restrict the IRS' ability to monitor program performance and track effectiveness of operations, and have caused confusion as to what types of data or measures may be discussed between managers and employees and reflected in manager and employee goals. These temporary regulations remove the limitations on the use of quantity measures in evaluating the performance of, or imposing or suggesting goals for organizational units. These temporary regulations also remove the limitations on the use of quantity measures to impose or suggest goals for employees. The regulations continue to provide that performance

measures based on quantity measures will not be used to evaluate the performance of such employees. The temporary regulations do not affect the continuing prohibition on the use of ROTERS to evaluate employee performance or to impose or suggest production quotas or goals for any employee.

Special Analyses

It has been determined that this is not a significant regulatory action as defined in Executive Order 12866. Therefore, a regulatory assessment is not required. It also has been determined that section 553(b) of the Administrative Procedure Act (5 U.S.C. chapter 5) does not apply to these regulations. For applicability of the Regulatory Flexibility Act, please refer to the cross-reference notice of proposed rulemaking published elsewhere in this **Federal Register**. Pursuant to section 7805(f) of the Internal Revenue Code, these temporary regulations will be submitted to the Chief Counsel for Advocacy of the Small Business Administration for comment on its impact on small business.

Drafting Information

The principal author of these regulations is Karen F. Keller, Office of Associate Chief Counsel (General Legal Services). However, other personnel from the IRS participated in their development.

List of Subjects in 26 CFR Part 801

Government employees, Organization and functions (Government agencies).

Amendments to the Regulations

■ Accordingly, 26 CFR part 801 is amended as follows:

PART 801—BALANCED SYSTEM FOR MEASURING ORGANIZATIONAL AND INDIVIDUAL PERFORMANCE WITHIN THE INTERNAL REVENUE SERVICE

■ **Paragraph 1.** The authority citation for part 801 continues to read in part as follows:

Authority: 5 U.S.C. 9501 * * *.

■ **Par. 2.** Section 801.1 is amended by:
■ 1. Adding the new center heading.
■ 2. Removing and reserving paragraph (b).

The addition reads as follows:

Regulations Applicable Before October 17, 2005

§ 801.1 Balanced performance measurement system; in general.

* * * * *

■ **Par. 3.** Section 801.7 is added to read as follows:

§ 801.7 Effective dates.

The provisions of §§ 801.1 through 801.6 apply before October 17, 2005. For the applicable provisions on or after October 17, 2005, see §§ 801.1T through 801.7T.

■ **Par. 4.** Sections 801.1T through 801.8T and a new center heading are added to read as follows:

Regulations Applicable On or After October 17, 2005

§ 801.1T Balanced performance measurement system; in general (temporary).

(a) *In general.* (1) The regulations in this part 801 implement the provisions of sections 1201 and 1204 of the Internal Revenue Service Restructuring and Reform Act of 1998 (Pub. L. 105–106, 112 Stat. 685, 715–716, 722) (the Act) and provide rules relating to the establishment by the Internal Revenue Service (IRS) of a balanced performance measurement system.

(2) Modern management practice and various statutory and regulatory provisions require the IRS to set performance goals for organizational units and to measure the results achieved by those units with respect to those goals. To fulfill these requirements, the IRS has established a balanced performance measurement system, composed of three elements: Customer Satisfaction Measures; Employee Satisfaction Measures; and Business Results Measures. The IRS is likewise required to establish a performance evaluation system for individual employees.

(b) [Reserved]

§ 801.2T Measuring organizational performance (temporary).

The performance measures that comprise the balanced measurement system will, to the maximum extent possible, be stated in objective, quantifiable, and measurable terms and will be used to measure the overall performance of various operational units within the IRS. In addition to implementing the requirements of the Act, the measures described here will, where appropriate, be used in establishing performance goals and making performance evaluations established, inter alia, under Division E, National Defense Authorization Act for Fiscal Year 1996 (the Clinger-Cohen Act of 1996) (Pub. L. 104–106, 110 Stat. 186, 679); the Government Performance and Results Act of 1993 (Pub. L. 103–62, 107 Stat. 285); and the Chief Financial Officers Act of 1990 (Pub. L. 101–576, 108 Stat. 2838). Thus, organizational measures of customer satisfaction, employee satisfaction, and business results (including quality and quantity measures as described in § 801.6T) may be used to evaluate the performance of or to impose or suggest production goals for, any organizational unit.

§ 801.3T Measuring employee performance (temporary).

(a) *In general.* All employees of the IRS will be evaluated according to the critical elements and standards or such other performance criteria as may be established for their positions. In accordance with the requirements of 5 U.S.C. 4312, 4313, and 9508 and section 1201 of the Act, the performance criteria for each position as are appropriate to that position, will be composed of elements that support the organizational measures of Customer Satisfaction, Employee Satisfaction, and Business Results; however, such organizational measures will not directly determine the evaluation of individual employees.

(b) *Fair and equitable treatment of taxpayers.* In addition to all other criteria required to be used in the evaluation of employee performance, all employees of the IRS will be evaluated on whether they provided fair and equitable treatment to taxpayers.

(c) *Senior Executive Service and special positions.* Employees in the Senior Executive Service will be rated in accordance with the requirements of 5 U.S.C. 4312 and 4313 and employees selected to fill positions under 5 U.S.C. 9503 will be evaluated pursuant to workplans, employment agreements, performance agreements, or similar documents entered into between the IRS and the employee.

(d) *General workforce.* The performance evaluation system for all other employees will—

(1) Establish one or more retention standards for each employee related to the work of the employee and expressed in terms of individual performance;

(2) Require periodic determinations of whether each employee meets or does not meet the employee's established retention standards;

(3) Require that action be taken in accordance with applicable laws and regulations, with respect to employees whose performance does not meet the established retention standards;

(4) Establish goals or objectives for individual performance consistent with the IRS's performance planning procedures;

(5) Use such goals and objectives to make performance distinctions among employees or groups of employees; and

(6) Use performance assessments as a basis for granting employee awards, adjusting an employee's rate of basic pay, and other appropriate personnel

actions, in accordance with applicable laws and regulations.

(e) *Limitations.* (1) No employee of the IRS may use records of tax enforcement results (as described in § 801.6T) to evaluate any other employee or to impose or suggest production quotas or goals for any employee.

(i) For purposes of the limitation contained in this paragraph (e), *employee* has the meaning as defined in 5 U.S.C. 2105(a).

(ii) For purposes of the limitation contained in this paragraph (e), *evaluate* includes any process used to appraise or measure an employee's performance for purposes of providing the following:

(A) Any required or requested performance rating.

(B) A recommendation for an award covered by Chapter 45 of Title 5; 5 U.S.C. 5384; or section 1201(a) of the Act.

(C) An assessment of an employee's qualifications for promotion, reassignment, or other change in duties.

(D) An assessment of an employee's eligibility for incentives, allowances, or bonuses.

(E) Ranking of employees for release/recall and reductions in force.

(2) Employees who are responsible for exercising judgment with respect to tax enforcement results in cases concerning one or more taxpayers may be evaluated on work done on such cases only in the context of their critical elements and standards.

(3) Performance measures based in whole or in part on quantity measures (as described in § 801.6T) will not be used to evaluate the performance of any non-supervisory employee who is responsible for exercising judgment with respect to tax enforcement results (as described in § 801.6T).

§ 801.4T Customer satisfaction measures (temporary).

The customer satisfaction goals and accomplishments of operating units within the IRS will be determined on the basis of information gathered through various methods. For example, questionnaires, surveys and other types of information gathering mechanisms may be employed to gather data regarding customer satisfaction. Information to measure customer satisfaction for a particular work unit will be gathered from a statistically valid sample of the customers served by that operating unit and will be used to measure, among other things, whether those customers believe that they received courteous, timely, and professional treatment by the IRS personnel with whom they dealt. Customers will be permitted to provide information requested for these purposes under conditions that guarantee them anonymity. For purposes of this section, customers may include individual taxpayers, organizational units, or employees within the IRS and external groups affected by the services performed by the IRS operating unit.

§ 801.5T Employee satisfaction measures (temporary).

The employee satisfaction numerical ratings to be given operating units within the IRS will be determined on the basis of information gathered through various methods. For example, questionnaires, surveys, and other information gathering mechanisms may be employed to gather data regarding satisfaction. The information gathered will be used to measure, among other factors bearing upon employee satisfaction, the quality of supervision and the adequacy of training and support services. All employees of an operating unit will have an opportunity to provide information regarding employee satisfaction within the operating unit under conditions that guarantee them anonymity.

§ 801.6T Business results measures (temporary).

(a) *In general.* The business results measures will consist of numerical scores determined under the quality measures and the quantity measures described elsewhere in this section.

(b) *Quality measures.* Quality measures will be determined on the basis of a review by a specially dedicated staff within the IRS of a statistically valid sample of work items handled by certain functions or organizational units determined by the Commissioner or his delegate such as the following:

(1) *Examination and collection units and Automated Collection System Units (ACS).* The quality review of the handling of cases involving particular taxpayers will focus on such factors as whether IRS personnel devoted an appropriate amount of time to a matter, properly analyzed the facts, and complied with statutory, regulatory, and IRS procedures, including timeliness, adequacy of notifications, and required contacts with taxpayers.

(2) *Toll-free telephone sites.* The quality review of telephone services will focus on such factors as whether IRS personnel provided accurate tax law and account information.

(3) *Other work units.* The quality review of other work units will be determined according to criteria prescribed by the Commissioner or his delegate.

(c) *Quantity measures.* Quantity measures will consist of outcome-neutral production and resource data that does not contain information regarding the tax enforcement result reached in any case that involves particular taxpayers. Examples of quantity measures include, but are not limited to—

(1) Cases started;

(2) Cases closed;

(3) Work items completed;

(4) Customer education, assistance, and outreach efforts completed;

(5) Time per case;

(6) Direct examination time/out of office time;

(7) Cycle time;

(8) Number or percentage of overage cases;

(9) Inventory information;

(10) Toll-free level of access; and

(11) Talk time.

(d) *Definitions*—(1) *Tax enforcement results.* A tax enforcement result is the outcome produced by an IRS employee's exercise of judgment in recommending or determining whether or how the IRS should pursue enforcement of the tax laws. Examples of tax enforcement results include a lien filed, a levy served, a seizure executed, the amount assessed, the amount collected, and a fraud referral. Examples of data that are not tax enforcement results include a quantity measure and data derived from a quality review or from a review of an employee's or a work unit's work on a case, such as the number or percentage of cases in which correct examination adjustments were proposed or appropriate lien determinations were made.

(2) *Records of tax enforcement results.* Records of tax enforcement results are data, statistics, compilations of information or other numerical or quantitative recordations of the tax enforcement results reached in one or more cases. Such records may be used for purposes such as forecasting, financial planning, resource management, and the formulation of case selection criteria. Records of tax enforcement results may be used to develop methodologies and algorithms for use in selecting tax returns to audit. Records of tax enforcement results do not include tax enforcement results of individual cases when used to determine whether an employee exercised appropriate judgment in pursuing enforcement of the tax laws based upon a review of the employee's work on that individual case.

§ 801.7T Examples (temporary).

(a) The rules of § 801.3T are illustrated by the following examples:

Example 1. (i) Each year Division A's Examination and Collection functions develop detailed workplans that set goals for specific activities (e.g., number of audits or accounts closed) and for other quantity measures such as cases started, cycle time, overage cases, and direct examination time. These quantity measure goals are developed nationally and by Area Office based on budget allocations, available resources, historical experience, and planned improvements. These plans also include information on measures of quality, customer satisfaction, and employee satisfaction. Results are updated monthly to reflect how each organizational unit is progressing against its workplan, and this information is shared with all levels of management.

(ii) Although specific workplans are not developed at the Territory level, Headquarters management expects the Area Directors to use the information in the Area plans to guide the activity in their Territories. For 2005, Area Office 1's workplan has a goal to close 1,000 examinations of small business corporations and 120,000 taxpayer delinquent accounts (TDAs), and there are 10 Exam Territories and 12 Collection Territories in Area Office 1. While taking into account the mix and priority of workload, and available staffing and grade levels, the Examination Area Director communicates to the Territory Managers the expectation that, on average, each Territory should plan to close about 100 cases. The Collection Area Director similarly communicates to each Territory the expectation that, on average, they will close about 10,000 TDAs, subject to similar factors of workload mix and staffing.

(iii) Similar communications then occur at the next level of management between Territory Managers and their Group Managers, and between Group Managers and their employees. These communications will emphasize the overall goals of the organization and each employee's role in meeting those goals. The communications will include expectations regarding the average number of case closures that would have to occur to reach those goals, taking into account the fact that each employee's actual closures will vary based upon the facts and circumstances of specific cases.

(iv) Setting these quantity measure goals, and the communication of those goals, is permissible because case closures are a quantity measure. Case closures are an example of outcome-neutral production data that does not specify the outcome of any specific case such as the amount assessed or collected.

Example 2. In conducting a performance evaluation, a supervisor is permitted to take into consideration information the supervisor has developed showing that the employee failed to propose an appropriate adjustment to tax liability in one of the cases the employee examined, provided that information is derived from a review of the work done on the case. All information derived from such a review of individual cases handled by the employee, including time expended, issues raised, and enforcement outcomes reached should be considered and discussed with the employee and used in evaluating the employee.

Example 3. When assigning a case, a supervisor is permitted to discuss with the employee the merits, issues, and development of techniques of the case based upon a review of the case file.

Example 4. A supervisor is not permitted to establish a goal for proposed adjustments in a future examination.

(b) [Reserved].

§ 801.8T Effective dates (temporary).

(a) The provisions of §§ 801.1T through 801.7T apply on or after October 17, 2005.

(b) The applicability of §§ 801.1T through 801.7T expires on or before October 14, 2008.

Mark E. Matthews,

Deputy Commissioner for Services and Enforcement.

Approved: October 3, 2005.

Eric Solomon,

Acting Deputy Assistant Secretary (Tax Policy).

[FR Doc. 05–20439 Filed 10–14–05; 8:45 am]

BILLING CODE 4830–01–P

ENVIRONMENTAL PROTECTION AGENCY

40 CFR Part 261

Identification and Listing of Hazardous Waste

CFR Correction

In Title 40 of the Code of Federal Regulations, Parts 260 to 265, revised as of July 1, 2005, in Appendix IX to Part 261, on pages 129 and 130, in the second column under ''Address'', transfer entries 2 and 3 to the third column under ''Waste description''.

[FR Doc. 05–55515 Filed 10–14–05; 8:45 am]

BILLING CODE 1505–01–D

ENVIRONMENTAL PROTECTION AGENCY

40 CFR Part 710

[OPPT–2003–0075; FRL–7715–2]

RIN–2070 AC61

TSCA Inventory Update Reporting Partially Exempted Chemicals List; Addition of 1,2,3-Propanetriol

AGENCY: Environmental Protection Agency (EPA).

ACTION: Direct final rule.

SUMMARY: EPA is taking direct final action to amend the Toxic Substances Control Act (TSCA) section 8(a) Inventory Update Reporting (IUR) regulations by adding 1,2,3-propanetriol (CASRN 56–81–5) to the list of chemical substances in 40 CFR 710.46(b)(2)(iv) which are exempt from reporting processing and use information required by 40 CFR 710.52(c)(4). EPA has determined that the IUR processing and use information for this chemical is of low current interest. Manufacturers and importers of the chemicals listed in 40 CFR 710.46(b)(2)(iv) must continue to report manufacturing information.

DATES: This direct final rule is effective on December 16, 2005 without further notice, unless EPA receives adverse comment by November 16, 2005. If, however, EPA receives adverse comment, EPA will publish a **Federal Register** document to withdraw the direct final rule before the effective date.

ADDRESSES: Submit your comments, identified by docket identification (ID) number OPPT–2005–0001, by one of the following methods:

- *Federal eRulemaking portal*:*http://www.regulations.gov/*. Follow the on-line instructions for submitting comments.
- *Agency website*:*http://www.epa.gov/edocket/*. EDOCKET, EPA's electronic public docket and comment system, is EPA's preferred method for receiving comments. Follow the on-line instructions for submitting comments.
- *E-mail*: *oppt.ncic@epa.gov*.
- *Mail*: Document Control Office (7407M), Office of Pollution Prevention and Toxics (OPPT), Environmental Protection Agency, 1200 Pennsylvania Ave., NW., Washington, DC 20460–0001.
- *Hand delivery*: OPPT Document Control Office (DCO), EPA East Bldg., Rm. 6428, 1201 Constitution Ave., NW., Washington, DC. Attention: Docket ID number OPPT–2003–0075. The DCO is open from 8 a.m. to 4 p.m., Monday through Friday, excluding legal holidays. The telephone number for the DCO is (202) 564–8930. Such deliveries are only accepted during the Docket's normal hours of operation, and special arrangements should be made for deliveries of boxed information.
- *Instructions*: Direct your comments to docket ID number OPPT–2005–0001. EPA's policy is that all comments received will be included in the public docket without change and may be made available online at *http://www.epa.gov/edocket/*, including any personal information provided, unless the comment includes information claimed to be Confidential Business Information (CBI) or other information

whose disclosure is restricted by statute. Do not submit information that you consider to be CBI or otherwise protected through EDOCKET, regulations.gov, or e-mail. The EPA EDOCKET and the regulations.gov websites are ''anonymous access'' systems, which means EPA will not know your identity or contact information unless you provide it in the body of your comment. If you send an e-mail comment directly to EPA without going through EDOCKET or regulations.gov, your e-mail address will be automatically captured and included as part of the comment that is placed in the public docket and made available on the Internet. If you submit an electronic comment, EPA recommends that you include your name and other contact information in the body of your comment and with any disk or CD ROM you submit. If EPA cannot read your comment due to technical difficulties and cannot contact you for clarification, EPA may not be able to consider your comment. Electronic files should avoid the use of special characters, any form of encryption, and be free of any defects or viruses. For additional information about EPA's public docket, visit EDOCKET on-line or see the **Federal Register** of May 31, 2002 (67 FR 38102) (FRL–7181–7).

• *Docket*: All documents in the docket are listed in the EDOCKET index at *http://www.epa.gov/edocket/*. Although listed in the index, some information is not publicly available, i.e., CBI or other information whose disclosure is restricted by statute. Certain other material, such as copyrighted material, is not placed on the Internet and will be publicly available only in hard copy form. Publicly available docket materials are available either electronically in EDOCKET or in hard copy at the OPPT Docket, EPA Docket Center, EPA West, Rm. B102, 1301 Constitution Ave., NW., Washington, DC. The Public Reading Room is open from 8:30 a.m. to 4:30 p.m., Monday through Friday, excluding legal holidays. The EPA Docket Center Reading Room telephone number is (202) 566–1744, and the telephone number for the OPPT Docket, which is located in the EPA Docket Center, is (202) 566–0280.

FOR FURTHER INFORMATION CONTACT: *For general information contact*: Colby Lintner, Regulatory Coordinator, Environmental Assistance Division (7408M), Office of Pollution Prevention and Toxics, Environmental Protection Agency, 1200 Pennsylvania Ave., NW., Washington, DC 20460–0001; telephone number: (202) 554–1404; e-mail address:*TSCA-Hotline@epa.gov*.

For technical information contact: Susan Sharkey, Project Manager, Economics, Exposure and Technology Division (7406M), Office of Pollution Prevention and Toxics, Environmental Protection Agency, 1200 Pennsylvania Ave., NW., Washington, DC 20460; telephone number: (202) 564–8789; e-mail address: *sharkey.susan@epa.gov*.

SUPPLEMENTARY INFORMATION:

I. General Information

A. Does this Action Apply to Me?

You may be affected by this action if you manufacture (defined by statute at 15 U.S.C. 2602(7) to include import) chemical substances, including inorganic chemical substances, subject to reporting under the Inventory Update Rule (IUR) at 40 CFR part 710. Any use of the term ''manufacture'' in this document will encompass import, unless otherwise stated. In the past, persons that only were processors of chemical substances have not been required to comply with the requirements of 40 CFR part 710. These amendments do not change the status of processors under the regulations at 40 CFR part 710.

Potentially affected entities may include, but are not limited to: Chemical manufacturers and importers subject to IUR reporting, including chemical manufacturers and importers of inorganic chemical substances (NAICS codes 325, 32411).

This listing is not intended to be exhaustive, but rather provides a guide for readers regarding entities likely to be affected by this action. Other types of entities not listed in this unit could also be affected. The North American Industrial Classification System (NAICS) codes have been provided to assist you and others in determining whether this action might apply to certain entities. To determine whether you or your business may be affected by this action, you should carefully examine the applicability provisions at 40 CFR 710.48. If you have any questions regarding the applicability of this action to a particular entity, consult the technical contact person listed under **FOR FURTHER INFORMATION CONTACT**.

B. How Can I Access Electronic Copies of this Document and Other Related Information?

In addition to using EDOCKET (*http://www.epa.gov/edocket/*), you may access this**Federal Register** document electronically through the EPA Internet under the ''**Federal Register**'' listings at *http:// www.epa.gov/fedrgstr/*. A frequently updated electronic version of 40 CFR part 710 is available at E-CFR Beta Site Two at *http://www.gpoaccess5.gov/ecfr/*.

C. What Should I Consider as I Prepare My Comments for EPA?

1. *Submitting CBI*. Do not submit CBI to EPA through EDOCKET, regulations.gov, or e-mail. Clearly mark the part or all of the information that you claim to be CBI. For CBI information in a disk or CD ROM that you mail to EPA, mark the outside of the disk or CD ROM as CBI and then identify electronically within the disk or CD ROM the specific information that is claimed as CBI. In addition to one complete version of the comment that includes information claimed as CBI, a copy of the comment that does not contain the information claimed as CBI must be submitted for inclusion in the public docket. Information so marked will not be disclosed except in accordance with procedures set forth in 40 CFR part 2.

2. *Tips for preparing your comments*. When submitting comments, remember to:

i. Identify the rulemaking by docket ID number and other identifying information (subject heading, **Federal Register** date, and page number).

ii. Follow directions. The Agency may ask you to respond to specific questions or organize comments by referencing a Code of Federal Regulations (CFR) part or section number.

iii. Explain why you agree or disagree; suggest alternatives, and substitute language for your requested changes.

iv. Describe any assumptions and provide any technical information and/or data that you used.

v. If you estimate potential costs or burdens, explain how you arrived at your estimate in sufficient detail to allow for it to be reproduced.

vi. Provide specific examples to illustrate your concerns, and suggest alternatives.

vii. Explain your views as clearly as possible, avoiding the use of profanity or personal threats.

viii. Make sure to submit your comments by the comment period deadline identified.

II. Background

A. What is the Agency's Authority for Taking this Action?

EPA is required under TSCA section 8(b), 15 U.S.C. 2607(b), to compile and keep current an inventory of chemical substances manufactured or processed in the United States. This inventory is

known as the TSCA Chemical Substances Inventory (the TSCA Inventory). In 1977, EPA promulgated a rule (42 FR 64572, December 23, 1977) under TSCA section 8(a), 15 U.S.C. 2607(a), to compile an inventory of chemical substances in commerce at that time. In 1986, EPA promulgated the initial IUR under TSCA section 8(a) at 40 CFR part 710 (51 FR 21438, June 12, 1986) to facilitate the periodic updating of the TSCA Inventory and to support activities associated with the implementation of TSCA. In 2003, EPA promulgated extensive amendments to the IUR (68 FR 848, January 7, 2003) (FRL–6767–4) (2003 Amendments) to collect manufacturing, processing, and use exposure-related information, and to make certain other changes. Minor corrections to the IUR were made in July of 2004 (69 FR 40787, July 7, 2004) (FRL–7332–3).

TSCA section 8(a)(1) authorizes the EPA Administrator to promulgate rules under which manufacturers and processors of chemical substances and mixtures (referred to hereinafter as chemical substances) must maintain such records and submit such information as the Administrator may reasonably require. TSCA section 8(a) generally excludes small manufacturers and processors of chemical substances from the reporting requirements established in TSCA section 8(a). However, EPA is authorized by TSCA section 8(a)(3) to require TSCA section 8(a) reporting from small manufacturers and processors with respect to any chemical substance that is the subject of a rule proposed or promulgated under TSCA section 4, 5(b)(4), or 6, or that is the subject of an order under TSCA section 5(e), or that is the subject of relief that has been granted pursuant to a civil action under TSCA section 5 or 7. The standard for determining whether an entity qualifies as a small manufacturer for purposes of 40 CFR part 710 generally is defined in 40 CFR 704.3. Processors are not currently subject to the regulations at 40 CFR part 710.

B. What is the Inventory Update Reporting (IUR) regulation?

The data reported under the IUR are used to update the information maintained on the TSCA Inventory. EPA uses the TSCA Inventory and data reported under the IUR to support many TSCA-related activities and to provide overall support for a number of EPA and other Federal health, safety, and environmental protection activities. The IUR, as amended by the 2003 Amendments, requires U.S. manufacturers (including importers) of chemicals listed on the TSCA Inventory to report to EPA every 4 years the identity of chemical substances manufactured for a commercial purpose during the reporting year in quantities of 25,000 pounds or more at any single site they own or control. The IUR generally excludes several categories of substances from its reporting requirements, i.e., polymers, microorganisms, naturally occurring chemical substances, and certain natural gas substances. Sites are required to report information such as company name, site location and other identifying information, identity and production volume of the reportable chemical substance, manufacturing exposure-related information associated with each reportable chemical substance, including the physical form and maximum concentration of the chemical substance and the number of potentially exposed workers.

Manufacturers (including importers) of larger volume chemicals (i.e., 300,000 lbs. or more manufactured during the reporting year at any site) are additionally required to report certain processing and use information (40 CFR 710.52(c)(4)). This information includes process or use category, NAICS code, industrial function category, percent production volume associated with each process or use category, number of use sites, number of potentially exposed workers, and consumer/commercial information such as use category, use in or on products intended for use by children, and maximum concentration.

For the 2006 submission period, inorganic chemicals, regardless of production volume, are partially exempt (i.e., submitters do not report the processing and use information listed in 40 CFR 710.52(c)(4)). After the 2006 reporting period, the partial exemption for inorganic chemicals will no longer be applicable and submitters will report processing and use information on inorganic chemical substances manufactured (including imported at a site in volumes of 300,000 pounds or more, unless partially exempted as described in Unit II.C. In addition, specifically listed petroleum process streams and other specifically listed chemical substances are partially exempt, and manufacturers of such substances are not required to report processing and use information during the 2006 submission period as well as subsequent submission periods.

C. What is the "Low Current Interest" Partial Exemption and Petition Process?

The 2003 Amendments established a partial exemption in 40 CFR 710.46(b)(2) for certain chemicals for which EPA has determined the IUR processing and use information to be of "low current interest." The current list of chemical substances which are subject to the low current interest exemption are identified at 40 CFR 710.46(b)(2)(iv). Persons who manufacture or import chemical substances listed in 40 CFR 710.46(b)(2)(iv) are not required to report the processing and use information specified in 40 CFR 710.52(c)(4), but are required to comply with all other reporting obligations. The public may petition EPA to add a substance to, or delete a substance from, the list of chemicals partially exempt from reporting under 40 CFR 710.46(b)(2).

In determining whether the partial exemption should apply to a particular chemical substance, EPA will consider the totality of information available for the chemical substance in question, including but not limited to information associated with one or more of the following considerations (see 40 CFR 710.46(b)(2)(ii)):

(A) Whether the chemical qualifies or has qualified in past IUR collections for the reporting of the information described in § 710.52(c)(4) (i.e., at least one site manufactures 300,000 pounds or more of the chemical).

(B) The chemical substance's chemical and physical properties or potential for persistence, bioaccumulation, health effects, or environmental effects (considered independently or together).

(C) The information needs of EPA, other federal agencies, tribes, states, and local governments, as well as members of the public.

(D) The availability of other complementary risk screening information.

(E) The availability of comparable processing and use information.

(F) Whether the potential risks of the chemical substance are adequately managed by EPA or another agency or authority.

It is important to note that the addition of a chemical substance under this partial exemption will not necessarily be based on the potential risks of the chemical, but on the Agency's current assessment of the need for collecting IUR processing and use information for that chemical, based upon the totality of information considered during the petition review process. Additionally, interest in a chemical or a chemical's processing and use information may increase in the future, at which time EPA will reconsider the applicability of this partial exemption for those chemicals.

A petition to amend the list of chemicals partially exempt from reporting under 40 CFR 710.46(b)(2) (whether by adding or removing a

chemical to or from the list) must be in writing, must identify the chemical in question, including a chemical identification number, and should provide sufficient information for EPA to determine whether collection of the information in 40 CFR 710.52(c)(4) for the chemical in question is of low interest.In an earlier **Federal Register** notice (70 FR 3658, January 26, 2005) (FRL–7332–2), EPA proposed to further amend the IUR regulations to clarify the petition requirements. In that notice, EPA explained that a petition must include a written rationale or justification to support the assertion that collecting processing and use information for the chemical substance is of low current interest. In addition, the proposal clarifies that the petition must be accompanied by relevant documents, and include specific citations to information in those documents. The proposed amendments also provide that the petitioner's rationale must include sufficient information upon which the Agency can assess the current need for IUR processing and use information and can make a decision concerning the reporting of that information for the subject chemical. Finally, the proposal clarifies that the burden of proof is on the petitioner to demonstrate why a given chemical substance should be considered of low current interest. The proposed rule has not yet been finalized.

D. What Action is the Agency Taking?

Through this action, EPA is amending the list of chemical substances that are partially exempt from reporting requirements under the IUR. EPA received three petitions requesting the addition of 1,2,3-propanetriol, CASRN 56–81–5, to the list of substances in 40 CFR 710.46(b)(2)(iv) (Refs. 1, 2, and 3). EPA considered the information provided in the three petitions and determined that there is at least one site manufacturing 300,000 pounds or more (see 40 CFR 710.46(b)(2)(ii)(A)); that there is sufficient current evidence of low hazard (see 40 CFR 710.46(b)(2)(ii)(B)); and that EPA believes that more information on 1,2,3-propanetriol (CASRN 56–81–5) would not further our understanding of this chemical at this time (see 40 CFR 710.46(b)(2)(ii)(C)). Therefore, the IUR processing and use information for 1,2,3-propanetriol (CASRN 56–81–5) is of low current interest (Ref. 4).

The petitions included sufficient information for EPA to identify a low current interest in the processing and use information associated with 1,2,3-propanetriol. One petition directed the Agency to specific citations in documents supplied with the petition, enabling the Agency to identify and review information pertinent to the decision.

EPA received 22 reports for 1,2,3-propanetriol with production volumes of 300,000 lbs. or greater in the 2002 IUR submission period. Removing the requirement to report processing and use information for 22 reports results in a cost savings of $119,483 to $128,960 in the first reporting cycle and $95,586 to $103,168 in future reporting cycles (Ref. 5).

The Agency acknowledges that additional, unidentified information may exist. If you are in possession of information which is relevant to the Agency's decision to partially exempt 1,2,3-propanetriol, please provide comments following the procedure listed in **ADDRESSES**.

III. Direct Final Rule Procedures

EPA is publishing this rule without prior proposal because the Agency views this as a noncontroversial amendment and anticipates no adverse comment. This final rule will be effective on December 16, 2005 without further notice unless the Agency receives adverse comment by November 16, 2005. If EPA receives adverse comment on this rulemaking, the Agency will publish a timely withdrawal in the **Federal Register** and will publish a notice of proposed rulemaking in a future edition of the **Federal Register**. The Agency will address the comments as part of that proposed rulemaking.

IV. Materials in the Rulemaking Record

The public version of the official record for this rulemaking is contained in three separate dockets that can be accessed as described in the **ADDRESSES** unit. Docket ID number OPPT–2005–0001 contains the main rulemaking record. Additionally, certain supporting records are contained in docket ID numbers OPPT–2003–0059 and OPPT–2004–0071, as identified in the listing contained in this unit. This record includes the documents located in the docket as well as the documents that are referenced in those documents.

1. Letter from Barbara J. Slatt, The Proctor & Gamble Company, to OPPT Document Control Officer, EPA, April 3, 2003. Docket document numbers OPPT–2003–0059–0002 through OPPT–2003–0059–0004.

2. Letter from Linda C. Burgert, The Dow Chemical Company, to OPPT Document Control Officer, EPA, December 30, 2003. Docket document number OPPT–2003–0059–0005.

3. Letter from Herbert Estreicher, Esq., and Martha E. Marrapese, Esq., Keller and Heckman LLP, to OPPT Document Control Officer, EPA, December 30, 2003. Docket document number OPPT–2004–0071–0002.

4. USEPA, ''Petition Review Report for CASRN 56–81–5,'' December 22, 2004.

5. USEPA, ''Cost Savings Estimate of Adding 1,2,3-Propanetriol to the 40 CFR 710.46(b)(2) Chemical Substance List,'' OPPT, January 5, 2005.

V. Statutory and Executive Order Reviews

A. Executive Order 12866: Regulatory Planning and Review

This direct final rule implements one change to 40 CFR part 710, resulting in a burden and cost reduction. Since this direct final rule does not impose any new requirements, it is not subject to review by the Office of Management and Budget (OMB) under Executive Order 12866, entitled *Regulatory Planning and Review* (58 FR 51735, October 4, 1993).

B. Paperwork Reduction Act

This direct final rule does not contain any information collections subject to OMB approval under the Paperwork Reduction Act (PRA), 44 U.S.C. 3501*et seq*.

C. Regulatory Flexibility Act

Since this action makes one change to 40 CFR part 710, resulting in a burden reduction, EPA certifies this action will not have a significant economic impact on a substantial number of small entities. There will be no adverse impact on small entities resulting from this action.

D. Unfunded Mandates Reform Act

This action does not impose any enforceable duty or contain any unfunded mandate as described under Title II of the Unfunded Mandates Reform Act of 1995 (UMRA) (Public Law 104–4).

E. Executive Order 3132

The Agency has determined that this action will not have a substantial direct effect on States, on the relationship between the national government and the States, or on the distribution of power and responsibilities among the various levels of government, as specified in Executive Order 13132, entitled *Federalism* (64 FR 43255, August 10, 1999). Executive Order 13132 requires EPA to develop an accountable process to ensure ''meaningful and timely input by State and local officials in the development of regulatory policies that have federalism

implications.'' ''Policies that have federalism implications'' is defined in the Executive Order to include regulations that have ''substantial direct effects on the States, on the relationship between the national government and the States, or on the distribution of power and responsibilities among the various levels of government.'' This action does not alter the relationships or distribution of power and responsibilities established by Congress.

F. Executive Order 13175

The Agency has determined that this rule does not have any ''tribal implications'' as described in Executive Order 13175, entitled *Consultation and Coordination with Indian Tribal Governments* (65 FR 67249, November 6, 2000). Executive Order 13175, requires EPA to develop an accountable process to ensure ''meaningful and timely input by tribal officials in the development of regulatory policies that have tribal implications.'' This direct final rule will not have substantial direct effects on tribal governments, on the relationship between the Federal Government and Indian tribes, or on the distribution of power and responsibilities between the Federal Government and Indian tribes, as specified in Executive Order 13175. Thus, Executive Order 13175 does not apply to this rule.

G. Executive Order 13045

This action does not require OMB review or any other Agency action under Executive Order 13045, entitled *Protection of Children from Environmental Health Risks and Safety Risks* (62 FR 19885, April 23, 1997).

H. Executive Order 13211

Because this direct final rule is exempt from review under Executive Order 12866 due to its lack of significance, this direct final rule is not subject to Executive Order 13211, *Actions Concerning Regulations That Significantly Affect Energy Supply, Distribution, or Use* (66 FR 28355, May 22, 2001).

I. National Technology Transfer Advancement Act

This action does not involve any technical standards that would require Agency consideration of voluntary consensus standards pursuant to section 12(d) of the National Technology Transfer and Advancement Act of 1995 (NTTAA), Public Law 104–113, section 12(d) (15 U.S.C. 272 note).

J. Congressional Review Act

The Congressional Review Act, 5 U.S.C. 801 *et seq.*, as added by the Small Business Regulatory Enforcement Fairness Act of 1996, generally provides that before a rule may take effect, the Agency promulgating the rule must submit a rule report, which includes a copy of the rule, to each House of the Congress and the Comptroller General of the United States. EPA will submit a report containing this rule and other required information to the U.S. Senate, the U.S. House of Representatives and the Comptroller General of the United States prior to publication of the rule in the **Federal Register**. This rule is not a ''major rule'' as defined by 5 U.S.C. 804(2).

List of Subjects in 40 CFR Part 710

Environmental protection, Chemicals, Hazardous materials, 1,2,3-Propanetriol, Reporting and recordkeeping requirements.

Dated: September 13, 2005.

Charles M. Auer,

Director, Office of Pollution Prevention and Toxics.

■ Therefore, 40 CFR chapter I is amended as follows:

PART 710 [AMENDED]

■ 1. The authority citation for part 710 continues to read as follows:

Authority: 15 U.S.C. 2607(a).

■ 2. Section 710.46 is amended by adding the following entry in ascending order to the table in paragraph (b)(2)(iv).

§ 710.46 Chemical substances for which information must be reported.

* * * * *

(b) * * *

(2) * * *

(iv) * * *

CAS NUMBERS OF PARTIALLY EXEMPT CHEMICAL SUBSTANCES UNDER § 710.46(B)(2)

CAS No.	Chemical
* * * * *	
56–81–5	1,2,3-Propanetriol
* * * * *	

* * * * *

[FR Doc. 05–20711 Filed 10–14–05; 8:45 am]

BILLING CODE 6560–50–S

GENERAL SERVICES ADMINISTRATION

41 CFR Parts 301–11 and 301–74

[FTR Amendment 2005–06; FTR Case 2005–306]

RIN 3090–AI20

Federal Travel Regulation; Per Diem Expenses (Meals and Incidental Expense Allowance) - 2005

AGENCY: Office of Governmentwide Policy, General Services Administration (GSA).

ACTION: Final rule.

SUMMARY: The General Services Administration (GSA) is amending the Federal Travel Regulation (FTR), by revising the meals and incidental expense (MI&E) allowance rates for the deduction of meals furnished by the Government or meals that are included in a registration fee, for travel within the Continental United States (CONUS). The FTR and any corresponding documents may be accessed at GSA's website at *http://www.gsa.gov/ftr*.

DATES: *Effective Date:* October 1, 2005.

FOR FURTHER INFORMATION CONTACT: The Regulatory Secretariat (VIR), Room 4035, GS Building, Washington, DC, 20405, (202) 208–7312, for information pertaining to status or publication schedules. For clarification of content, contact Ms. Umeki Gray Thorne, Office of Governmentwide Policy, Travel and Transportation Policy Formulation, at (202) 208–7636. Please cite FTR Amendment 2005–06; FTR case 2005–306.

SUPPLEMENTARY INFORMATION:

A. Background

In July 2005 a study was conducted to evaluate the current cost of meals in non-standard and standard CONUS areas. The previous study of this kind was conducted in 1998. As a result of the 2005 study's findings, a new meals and incidental expense rate was approved. These new meal rates and new meal breakdown allowances for meals furnished by the Government or meals that are included in a registration fee for CONUS travel are provided under this amendment.

B. Executive Order 12866

This is not a significant regulatory action and, therefore, was not subject to review under Section 6(b) of Executive Order 12866, Regulatory Planning and Review, dated September 30, 1993. This rule is not a major rule under 5 U.S.C. 804.

C. Regulatory Flexibility Act

This final rule is not required to be published in the **Federal Register** for notice and comment; therefore, the Regulatory Flexibility Act, 5 U.S.C. 601, *et seq.*, does not apply.

D. Paperwork Reduction Act

The Paperwork Reduction Act does not apply because the changes to the FTR do not impose recordkeeping or information collection requirements, or the collection of information from offerors, contractors, or members of the public that require the approval of the Office of Management and Budget under 44 U.S.C. 3501, *et seq.*

E. Small Business Regulatory Enforcement Fairness Act

This final rule is also exempt from congressional review prescribed under 5 U.S.C. 801 since it relates solely to agency management and personnel.

List of Subjects in 41 CFR Parts 301–11 and 301–74

Government employees, Travel and transportation expenses.

Dated: October 4, 2005.

Stephen A. Perry,

Administrator of General Services.

■ For the reasons set forth in the preamble, under 5 U.S.C. 5701–5709, GSA amends 41 CFR parts 301–11 and 301–74 as set forth below:

PART 301–11—PER DIEM EXPENSES

■ 1. The authority citation for 41 CFR part 301–11 continues to read as follows:

Authority: 5 U.S.C. 5707.

■ 2. Revise section 301–11.18 to read as follows:

§ 301–11.18 What M&IE rate will I receive if a meal(s) is furnished by the Government or is included in the registration fee?

Your M&IE rate must be adjusted for a meal(s) furnished to you by the Government (including meals furnished under the authority of Part 304 of this Title) by deducting the appropriate amount shown in the chart in this section for travel within CONUS and the chart in Appendix B of this Chapter for meal deductions for OCONUS and foreign travel. The total amount of deductions made will not cause you to receive less than the amount allowed for incidental expenses.

Total M&IE	$39	$44	$49	$54	$59	$64
Breakfast	7	8	9	10	11	12
Lunch	11	12	13	15	16	18
Dinner	18	21	24	26	29	31
Incidentals	3	3	3	3	3	3

PART 301–74—CONFERENCE PLANNING

■ 3. The authority citation for 41 CFR part 301–74 continues to read as follows:

Authority: 5 U.S.C. 5707.

§ 301–74.21 What is the applicable M&IE rate when meals or light refreshments are furnished by the Government or are included in the registration fee?

■ 4. Amend § 301–74.21 by revising the section heading as set forth above and removing from the introductory paragraph of the response ''at nominal or no cost''.

[FR Doc. 05–20690 Filed 10–14–05; 8:45 am]

BILLING CODE 6820–14–S

FEDERAL COMMUNICATIONS COMMISSION

47 CFR Parts 51, 63, 64

[CC Docket Nos. 02–33; 01–337; 95–20; 98–10; WC Docket No. 04–242; FCC 05–150]

Appropriate Framework for Broadband Access to the Internet Over Wireline Facilities

AGENCY: Federal Communications Commission.

ACTION: Final rule.

SUMMARY: In this document, the Federal Communications Commission (Commission) establishes a regulatory framework for facilities-based providers of wireline broadband Internet access service. Under this framework, the Commission determines that facilities-based wireline broadband Internet access service is an information service, and that facilities-based providers of the service are no longer required to separate out the transmission component (*i.e.*, transmission in excess of 200 kilobits per second (kbps) in at least one direction) of wireline broadband Internet access services as a stand-alone telecommunications service under Title II of the Communications Act of 1934, as amended (Act), subject to a one-year transition period, during which providers must continue to provide existing wireline broadband Internet access transmission offerings, on a grandfathered basis, to unaffiliated information service providers (ISPs). After the transition period, facilities-based wireline broadband Internet access service providers are permitted to offer broadband Internet access services on a common carrier basis under Title II or on a non-common carrier basis. In addition, the Bell Operating Companies (BOCs) are immediately relieved of all requirements associated with the Commission's *Computer Inquiry* Orders with respect to wireline broadband Internet access services. The document further concludes that the broadband transmission component of wireline broadband Internet access service is not a telecommunication service under the Act. It also addresses other important areas relating to the provision of broadband Internet access services. Overall, this new regulatory framework encourages the ubiquitous availability of broadband to all Americans by removing outdated regulations, developing consistent regulations across broadband platforms, and encouraging broadband investment and deployment.

DATES: *Effective Date:* This rule is effective November 16, 2005.

ADDRESSES: Federal Communications Commission, 445 12th Street, SW., Washington, DC 20554.

FOR FURTHER INFORMATION CONTACT: Jodie May or William Kehoe, Attorney-Advisors, Competition Policy Division, Wireline Competition Bureau, at (202) 418–1580.

SUPPLEMENTARY INFORMATION: This is a summary of the Commission's Report and Order (Order) in CC Docket Nos. 02–33, 01–337, 95–20, 98–10; WC Docket No. 04–242; FCC 05–150, adopted August 5, 2005, and released September 23, 2005. The complete text of this document is available for inspection and copying during normal business hours in the FCC Reference Information Center, Portals II, 445 12th Street, SW., Room CY–A257, Washington, DC 20554. This document may also be purchased from the Commission's duplicating contractor, Best Copy and Printing, Inc., 445 12th Street, SW., Room CY–B402,

Washington, DC 20554, telephone (800) 378–3160 or (202) 863–2893, facsimile (202) 863–2898, or via e-mail at *www.bcpiweb.com.* It is also available on the Commission's Web site at *http://www.fcc.gov.*

Synopsis of the First Report and Order (Order)

1. *Background.* The Communications Act does not address directly how broadband Internet access service should be classified or regulated. The Act does, however, provide the Commission express directives with respect to encouraging broadband deployment, generally, and promoting and preserving a freely competitive Internet market, specifically. Consequently, the Commission initiated a Notice of Proposed Rulemaking (Wireline Broadband Notice) in 2002 (67 FR 9232, Feb. 28, 2002) to seek comment on the appropriate regulatory framework for wireline broadband Internet access service.

2. Wireline broadband Internet access service, for purposes of this proceeding, is a service that uses existing or future wireline facilities of the telephone network to provide subscribers with Internet access capabilities. The term ''Internet access service'' refers to a service that always and necessarily combines computer processing, information provision, and computer interactivity with data transport, enabling end users to run a variety of applications such as e-mail, and access Web pages and newsgroups. Wireline broadband Internet access service, like cable modem service, is a functionally integrated, finished service that inextricably intertwines information-processing capabilities with data transmission such that the consumer always uses them as a unitary service. The Commission ruled in 2002 that cable modem service was an information service under the Act (67 FR 18907, April 17, 2002). The U.S. Supreme Court affirmed that ruling in *National Cable & Telecommunications Ass'n* v. *Brand X Internet Services*, 125 S. Ct. 2688 (2005) (*Brand X*).

3. As we explained in the Wireline Broadband Notice, providers of wireline broadband Internet access service offer subscribers the ability to run a variety of applications that fit under the characteristics stated in the information service definition under the Act. These characteristics distinguish wireline broadband Internet access service from other wireline broadband services, such as stand-alone ATM service, frame relay, gigabit Ethernet service, and other high-capacity special access services, that carriers and end users have traditionally used for basic transmission purposes. That is, these services lack the key characteristics of wireline broadband Internet access service—they do not inextricably intertwine transmission with information-processing capabilities. Because carriers and end users typically use these services for basic transmission purposes, these services are telecommunications services under the statutory definitions. These broadband telecommunications services remain subject to current Title II requirements.

4. In the Wireline Broadband Notice, the Commission tentatively concluded that wireline broadband Internet access service is an information service when provided over an entity's own facilities, and that the underlying transmission component of such service constituted ''telecommunications'' and not a ''telecommunications service'' under the Act. The Commission invited comment on these tentative conclusions and its prior conclusion that ''an entity is providing a 'telecommunications service' to the extent that such entity provides only broadband transmission service on a stand-alone basis, without a broadband Internet Access service.'' Finally, the Commission sought comment on the extent to which any actions it might take in this proceeding would affect other regulatory obligations.

5. In addressing the issues before us, we draw from the records of several proceedings, including the Wireline Broadband Notice and the Notice of Proposed Rulemaking in the Incumbent LEC Broadband proceeding (67 FR 1945, Jan. 15, 2002), in which the Commission invited comment on technological and market-related issues relating to our tariffing rules for incumbent LECs' broadband telecommunications services. Consistent with the scope of the Wireline Broadband Notice, we restrict our decisions in this Order to only wireline broadband Internet access services and those wireline broadband technologies that have been utilized for such Internet access services.

6. *Regulatory Classification of Wireline Broadband Internet Access Service:* We affirm our tentative conclusion ''that wireline broadband Internet access service provided over a provider's own facilities is an information service.'' This classification is consistent both with the Commission's classification of cable modem service, as affirmed by the Supreme Court in *Brand X*, and with the Commission's earlier determination in its Report to Congress (*Federal-State Joint Board on Universal Service, Report to Congress*, CC Docket No. 96–45, 13 FCC Rcd 11501 (1998) (63 FR 43088, August 12, 1998)) that Internet access service is an information service. Applying the definitions of ''information service,'' ''telecommunications,'' and ''telecommunications service'' in the Act, we conclude that wireline broadband Internet access service provided over a provider's own facilities is appropriately classified as an information service because its providers offer a single, integrated service (*i.e.*, Internet access) to end users. That is, like cable modem service (which is usually provided over the provider's own facilities), wireline broadband Internet access service combines computer processing, information provision, and computer interactivity with data transport, enabling end users to run a variety of applications (*e.g.*, e-mail, Web pages, and newsgroups). These applications encompass the capability for ''generating, acquiring, storing, transforming, processing, retrieving, utilizing, or making available information via telecommunications,'' and taken together constitute an information service as defined by the Act.

7. The capabilities of wireline broadband Internet access service demonstrate that this service, like cable modem service, provides end users more than pure transmission, ''between or among points selected by the user, of information of the user's choosing, without change in the form or content of the information as sent and received.'' Because wireline broadband Internet access service inextricably combines the offering of powerful computer capabilities with telecommunications, we conclude that it falls within the class of services identified in the Act as ''information services.'' The information service classification applies regardless of whether subscribers use all of the functions and capabilities provided as part of the service (*e.g.*, e-mail or Web-hosting), and whether every wireline broadband Internet access service provider offers each function and capability that could be included in that service. Indeed, as with cable modem service, an end user of wireline broadband Internet access service cannot reach a third party's Web site without access to the Domain Naming Service (DNS) capability ''which (among other things) matches the Web site address the end user types into his browser (or ''clicks'' on with his mouse) with the IP address of the Web page's host server.'' The end user therefore

receives more than transparent transmission whenever he or she accesses the Internet.

8. There is no reason to classify wireline broadband Internet access services differently depending on who owns the transmission facilities. From the end user's perspective, an information service is being offered regardless of whether a wireline broadband Internet access service provider self-provides the transmission component or provides the service over transmission facilities that it does not own. As the Commission indicated in its Report to Congress, what matters is the finished product made available through a service rather than the facilities used to provide it. The end user of wireline broadband Internet access service receives an integrated package of transmission and information processing capabilities from the provider, and the identity of the owner of the transmission facilities does not affect the nature of the service to the end user. Thus, in addition to affirming our tentative conclusion above ''that wireline broadband Internet access service provided over a provider's own facilities is an information service,'' we also make clear that wireline broadband Internet access service is an information service when the provider of the retail service does not provide the service over its own transmission facilities. Not only is the classification of wireline broadband Internet access service as an information service consistent with *Brand X*, but this classification, in our view, best facilitates the goals of the Act, including promoting the ubiquitous availability of broadband Internet access services to all Americans.

9. *Regulation of Wireline Broadband Internet Access Service Providers.* Wireline broadband Internet access services provided by facilities-based carriers are currently governed by rules established in the Commission's *Computer Inquiry* proceedings. The Commission created a framework in *Computer II* (*Amendment of Section 64.702 of the Commission's Rules and Regulations* (*Computer II*), 77 FCC 2d 384 (1980)(77 FCC 2d 384 1980 (subsequent citations omitted)) that defined and distinguished between ''basic services'' and ''enhanced services.'' It determined that enhanced services were not within the scope of its Title II jurisdiction but rather were within its ancillary jurisdiction under Title I. Pursuant to its ancillary jurisdiction, the Commission required facilities-based common carriers to provide the basic transmission services underlying their enhanced services on a nondiscriminatory basis pursuant to tariffs governed by Title II of the Act. These carriers thus offered the underlying basic service at the same prices, terms, and conditions, to all enhanced service providers, including their own enhanced services operations.

10. The Commission subsequently determined that the cost of decreased efficiency and innovation imposed by the structural safeguards of *Computer II* outweighed their benefits. The Commission therefore replaced structural separation with a regime of nonstructural safeguards in its *Computer III* decisions (*Amendment of Section 64.702 of the Commission's Rules and Regulations*, CC Docket No. 85–229, Phase I, 104 FCC 2d 958 (1986) (51 FR 24350, July 3, 1986) (subsequent citations omitted)). This framework maintained the existing basic and enhanced service categories and adopted comparably efficient interconnection (CEI) and open network architecture (ONA) requirements as a replacement for the *Computer II* structural separation requirements for AT&T and the BOCs. When Congress enacted the 1996 Act, it created new statutory terms (*i.e.*, ''information service'' and ''telecommunications service'') that substantially incorporated the dichotomy between basic and enhanced services into the Communications Act. As we noted above, although the 1996 Act uses ''information service'' and ''telecommunications service'' instead of ''enhanced service'' and ''basic service,'' the Commission has previously determined that Congress intended the statutory categories to parallel the categories the Commission established in the *Computer Inquiry* proceeding. More specifically, the Commission found that all of the services that the Commission has previously considered to be enhanced services are ''information services.''

11. The *Computer II* obligation that all facilities-based wireline carriers that own common carrier transmission facilities and provide enhanced services must acquire transmission capacity pursuant to the same prices, terms, and conditions reflected in their tariffs when their own facilities are utilized has been applied exclusively to traditional wireline services and facilities to date. By contrast, the *Computer II* obligations do not apply to cable modem service providers or to facilities-based enhanced services providers other than traditional wireline carriers. The Commission's structural separation, CEI, and ONA rules apply only to the BOCs.

12. *Elimination of the Computer Inquiry Requirements.* The Order explains that the technology used to build networks, and the purposes for which they are built, are fundamentally changing. These changes are rapidly breaking down the formerly rigid barriers that separated one network from another. There are numerous technologies and network designs that form, or potentially could form, part of the broadband telecommunications infrastructure of the 21st century. Cable operators have deployed cable modem technology. Mobile wireless providers are increasingly offering high-speed Internet access using technologies like Evolution-Data Optimized (EV–DO) technology. Satellite providers have deployed both Ku-band and even more advanced Ka-band technology that can offer high-speed Internet access service throughout the nation. Fixed wireless operators are planning to use licensed and unlicensed spectrum to deliver broadband services, and are developing new technologies that promise ubiquitous service and greater bandwidth. Other companies are exploring the use of power lines and cables placed in gas lines to provide broadband services. The nation's wireline infrastructure also is changing and is now using digital, packet-based technology to deliver a wider range of services. The Order further states that network platforms therefore will be multi-purpose in nature and more application-based, rather than existing for a single, unitary, technologically specific purpose. More generally, the erosion of barriers between various networks and the limitations inherent in those barriers will lead to greater capacity for innovation to offer new services and products. Both the providers of network platforms and those that utilize the platforms are in a position to capitalize on these changes. In addition, as with any evolving technology, new products and providers will continue to emerge to complement existing market offerings and participants; and these offerings will grow over time as consumers demand even more advanced services, with the result that technological growth and development continue on an upward spiral.

13. We decline to continue to impose any *Computer Inquiry* requirements on facilities-based carriers in their provision of wireline broadband Internet access service. Consequently, BOCs are immediately relieved of the separate subsidiary, CEI, and ONA obligations with respect to wireline broadband Internet access services. In addition, subject to a one-year transition period for existing wireline broadband transmission services, all wireline

broadband Internet access service providers are no longer subject to the *Computer II* requirement to separate out the underlying transmission from wireline broadband Internet access service and offer it on a common carrier basis.

14. We agree with those commenters that argue that the *Computer Inquiry* obligations are inappropriate and unnecessary for today's wireline broadband Internet access market. As these parties observe, the *Computer Inquiry* rules were developed before separate and different broadband technologies began to emerge and compete for the same customers. Further, these rules were adopted based on assumptions associated with narrowband services, single purpose network platforms, and circuit-switched technology. Notably, even commenters that argue for a continued access requirement generally acknowledge that the current structural separation, CEI, and ONA requirements are outmoded and should be eliminated or replaced. Indeed, the record provides little, if any, support for retaining the structural separation option of *Computer II* or for conditioning BOC structural relief on compliance with a detailed set of regulatory requirements such as the CEI or ONA requirements. Instead, commenters arguing for continued regulation of wireline broadband Internet access service providers focus primarily on the core nondiscriminatory access obligation of *Computer II*, urging that we, at a minimum, should retain a common carrier transmission access requirement in some form. In evaluating these arguments, we are mindful that one of the Commission's most critical functions is to adapt regulation to changing technology and competitive conditions to accomplish its mandates under the Act.

15. In determining whether to eliminate the *Computer Inquiry* requirements (*e.g.*, the separate subsidiary, nondiscriminatory access to transmission, CEI, and ONA obligations) for facilities-based providers of wireline broadband Internet access services, we weigh the benefits of these requirements against their costs in accordance with our obligations under the Act. This determination is informed not only by our understanding of the current broadband Internet access market, but what our predictive judgment tells about how that market is likely to develop. It is critical to factor in these future expectations because the broadband market is evolving rapidly. At the time the *Computer Inquiry* rules were adopted, there was an implicit, if not explicit, assumption that the incumbent LEC wireline platform would remain the only network platform available to enhanced services providers. Regulated access to wireline transmission thus was essential for a competitive information services market to flourish.

16. The characteristics of the broadband market, as well as evidence that facilities-based wireline carriers have incentives to make, and indeed already make, broadband transmission capacity available to ISPs, absent regulation, are factors that influence our analysis in determining whether such regulation is still necessary. Moreover, this regulation can have a significant impact on the ability of wireline platform providers to develop and deploy innovative broadband capabilities that respond to market demands. The record shows that the additional costs of an access mandate diminish a carrier's incentive and ability to invest in and deploy broadband infrastructure investment. We find this negative impact on deployment and innovation particularly troubling in view of Congress' clear and express policy goal of ensuring broadband deployment, and its directive that we remove barriers to that deployment, if possible, consistent with our other obligations under the Act. It is precisely this negative impact on broadband infrastructure that led the Commission to eliminate other broadband-related regulation over the past two years. These factors, when weighed against the benefits of continuing these regulations, render a different policy result than the judgment reached at the time the *Computer Inquiry* rules were adopted.

17. As outlined in the Wireline Broadband Notice, we seek to adopt a comprehensive policy that ensures, consistent with the Act in general and section 706 specifically, that broadband Internet access services are available to all Americans and that undue regulation does not constrain incentives to invest in and deploy the infrastructure needed to deliver broadband Internet access services. As part of this policy, we believe that we should regulate like services in a similar manner so that all potential investors in broadband network platforms, and not just a particular group of investors, are able to make market-based, rather than regulatory-driven, investment and deployment decisions.

18. Our decision in this Order is consistent with the decision issued by the Ninth Circuit Court of Appeals in 1994, *California* v. *FCC*, 39 F.3d 919 (9th Cir. 1994). In that decision, the Ninth Circuit vacated part of the Commission's *Computer III* ONA rules. According to the court, the Commission had failed to explain how its ''diluted version of ONA,'' would prevent BOCs from exploit[ing] their monopoly control over the local networks. For the reasons discussed herein, we determine that the competitive pressures and technological changes that have arisen since 1990 have reduced the BOCs' incentive and ability to discriminate against unaffiliated ISPs in their provision of broadband Internet access service to the point that structural separation for BOC broadband Internet access service is no longer necessary. Specifically, we believe that the analysis in this Order that persuades us to eliminate not only the structural separation requirement, but all *Computer Inquiry* obligations, applicable to wireline broadband Internet access service provides the level of detail the Ninth Circuit found lacking in the Commission's prior decision eliminating that requirement.

19. The Order also analyzes the wireline broadband Internet access services marketplace, technological innovation, the opportunity for new services offered by wireline broadband Internet access service providers, the fact that wireline broadband transmission will remain available to ISPs, and Congress's objectives in section 706 of the Act regarding broadband deployment to determine that we can eliminate a mandatory common carrier broadband transmission requirement, subject to the one year transitional mechanism. We also find that we need not retain the *Computer Inquiry* regime, or any of its individual requirements, to protect against improper cross subsidization. The Commission's ratemaking methods and those of our state counterparts have changed considerably since the Ninth Circuit addressed the need for structural separation as a safeguard against cross-subsidization in 1994. We conclude that changes have further reduced the potential that the BOCs could increase rates for tariffed telecommunications services through cost shifting. Indeed, unlike the situation before the Ninth Circuit in 1994, the BOCs' costs are no longer used to determine the BOCs' price cap rates. In view of this reduced potential, we find that there is no need to retain either the *Computer II* structural separation requirement or the *Computer III* nonstructural safeguards to keep the BOCs from cross-subsidizing their broadband Internet access service operations with revenues from the telecommunications services operations. The benefits we anticipate from the

elimination of these structural and nonstructural safeguards, including the increased infrastructure investment that our new framework should generate, outweigh any protection against cross-subsidization that those safeguards provide.

20. *New Regulatory Framework for Wireline Broadband Internet Access Service Providers.* We adapt our regulatory requirements, consistent with the Act, to correct for restrictions on wireline broadband Internet access service providers' ability to incorporate advanced integrated technology into their broadband offerings, impediments to responding rapidly and efficiently to changing broadband market demands due to outdated existing rules, and constraints on broadband innovation and infrastructure investment. We eliminate the *Computer Inquiry* obligations as applied to facilities-based providers of wireline broadband Internet access service, and, in particular, the obligation to offer the transmission component of wireline broadband Internet access service on a stand-alone common carrier basis. Facilities-based wireline broadband Internet access service providers, subject to a one-year transition period which we also adopt, may choose to offer the transmission component of wireline broadband Internet access services to both affiliated and unaffiliated ISPs or others on a non-common carrier basis or a common carrier basis. We incorporate this flexibility into our new framework to account for the differing business issues affecting different wireline broadband Internet access service providers. For example, associations of rural incumbent LECs have indicated that their members may choose to offer broadband Internet access transmission service on a common carrier basis. Thus, unlike previous Commission initiatives (*e.g.*, the deregulation of CPE), we are not eliminating carriers' ability to offer wireline broadband transmission on a Title II basis. Indeed, as we discuss below, enabling carriers to offer broadband Internet access transmission in alternative ways furthers our policy objectives and is consistent with precedent.

21. *Wireline Broadband Internet Access Service Providers May Offer Transmission Service on a Non-Common Carrier Basis or a Common Carrier Basis.* The record demonstrates that allowing non-common carriage arrangements for wireline broadband transmission will best enable facilities-based wireline broadband Internet access service providers, particularly incumbent LECs, to embrace a market-based approach to their business relationships with ISPs, providing the flexibility and freedom to enter into mutually beneficial commercial arrangements with particular ISPs. Facilities-based wireline carriers as well as certain portions of the ISP community and broadband equipment manufacturers agree that market-based commercial arrangements will better serve the interests of ISPs, broadband providers, and consumers.

22. Non-common carriage contracts will permit ISPs to enter into various types of compensation arrangements for their wireline broadband Internet access transmission needs that may better accommodate their individual market circumstances. For example, ISPs and facilities-based carriers could experiment with revenue-sharing arrangements or other types of compensation-based arrangements keyed to the ISPs' marketplace performance, enabling the ISPs to avoid a fixed monthly recurring charge (as is typical with tariffed offerings) for their transmission needs during start-up periods. Non-common carriage also enables parties to a contract to modify their arrangement over time as their respective needs and requirements change without the inherent delay associated with a tariffed offering that must be made available to all ISPs. Moreover, it encourages other types of commercial arrangements with ISPs, reflecting business models based on risk sharing such as joint ventures or partnership-type arrangements, where each party brings their added value, benefiting both the consumer (through the ability to obtain a new innovative service) and each party to the commercial arrangement. Such arrangements may also encourage unaffiliated ISPs to develop innovative applications and services that differentiate them from other ISPs. The ability to deliver such innovative services over their platforms in order to attract customers will likely motivate wireline facilities-based broadband transmission providers to negotiate mutually beneficial arrangements that enable the wireline facilities-based broadband transmission provider to share the financial rewards of bringing the new Internet access applications or services to consumers.

23. A number of parties have indicated that some carriers may nevertheless choose to offer the transmission component of broadband Internet access service as a common carrier service absent the *Computer Inquiry* requirements. Other parties have indicated they would avail themselves of the opportunity to offer certain types of broadband Internet access transmission on a common carrier basis and other types of broadband Internet access transmission on a non-common carrier basis. Our primary goal in this proceeding is to facilitate broadband deployment in the manner that best promotes wireline broadband investment and innovation, and maximizes the incentives of all providers to deploy broadband. We find that we can best further this goal by providing all wireline broadband providers the flexibility to offer these services in the manner that makes the most sense as a business matter and best enables them to respond to the needs of consumers in their respective service areas.

24. We therefore conclude that providers of wireline broadband Internet access service that offer that transmission as a telecommunications service after the effective date of this Order may do so on a permissive detariffing basis. Such providers thus may, in lieu of filing tariffs with the Commission setting forth the rates, terms, and conditions under which they will provide broadband Internet access transmission service, include those rates, terms, and conditions in generally available offerings posted on their Web sites. Each such provider electing not to tariff the broadband Internet access transmission that it offers as a telecommunications service also must make physical copies of its offering reflecting the rates, terms and conditions available for public inspection at a minimum of one place of business.

25. To enable facilities-based wireline Internet access providers to maximize their ability to deploy broadband Internet access services and facilities in competition with other platform providers, under a regulatory framework that provides all market participants with the flexibility to determine how best to structure their business operations, facilities-based carriers are able to choose whether to offer wireline broadband Internet access transmission as non-common carriage or common carriage. In addition, to the extent they choose to offer that transmission as common carriage, they may do so either under tariff or on a non-tariffed basis. The Commission, on numerous occasions, has determined that a particular service can be offered on a non-common carrier or common carrier basis at the service provider's option. Similarly, here, we conclude that it is appropriate to provide facilities-based wireline broadband Internet access service providers with freedom to determine how to provide the

broadband transmission capabilities of such services.

26. In order to ensure that this flexible approach is consistent with statutory requirements, efficient, and administrable, we specify that a facilities-based wireline broadband Internet access provider may not simultaneously offer the same type of broadband Internet access transmission on both a common carrier and non-common carrier basis. It may, however, choose to make available one type of broadband Internet access transmission on a common carrier basis and another type of such transmission on a non-common carrier basis. Of course, any transmission offering that a facilities-based wireline broadband Internet access provider makes available on a tariffed common carrier basis will be subject to the terms contained in its tariff and, consistent with Title II of the Act, the provider may charge customers for that service only at the rates contained in the tariff.

27. Some commenters request that we impose certain content-related requirements on wireline broadband Internet access service providers that would prohibit them from blocking or otherwise denying access to any lawful Internet content, applications, or services a consumer wishes to access. While we agree that actively interfering with consumer access to any lawful Internet information, products, or services would be inconsistent with the statutory goals of encouraging broadband deployment and preserving and promoting the open and interconnected nature of the public Internet, we do not find sufficient evidence in the record before us that such interference by facilities-based wireline broadband Internet access service providers or others is currently occurring. We therefore decline at this time to adopt rules prohibiting such interference. Instead, we find that the better course is to articulate principles recognizing the importance of consumer choice and competition in regard to accessing and using the Internet, and we have adopted an Internet Policy Statement (*Appropriate Framework for Broadband Access to the Internet over Wireline Facilities*, CC Docket No. 02–33, Policy Statement, FCC 05–151 (released September 23, 2005)) that outlines these principles. We intend to incorporate these principles into our ongoing policymaking activities. Should we see evidence that providers of telecommunications for Internet access or IP-enabled services are violating these principles, we will not hesitate to take action to address that conduct.

28. *Current Title II Unbundled Wireline Broadband Internet Access Transmission Services Must Remain Available During a One-Year Transition Period.* Although we determine above that immediate relief for wireline broadband Internet access transmission providers is warranted, we are nonetheless sensitive to the fact that the Commission's previous regulatory regime for these services has created reasonable reliance and expectation by unaffiliated ISPs on the availability of currently tariffed, broadband Internet access transmission offerings. In addition, we are concerned that a flash-cut transition may unnecessarily disrupt customers' service due to a provider's inability to adapt its business practices so quickly. We therefore adopt a one-year transition period, which begins on the effective date of this Order, in order to give both ISPs and facilities-based wireline broadband Internet access transmission providers sufficient time to adjust to our new framework. During the transition, facilities-based wireline broadband Internet access transmission providers must continue to honor existing transmission arrangements with their current ISP or other customers, but they are not required to offer such arrangements to new customers or to existing customers at new locations. If these arrangements are provided pursuant to tariffs currently on file with the Commission, wireline broadband Internet access transmission providers may retain these tariffs during the one-year period, or, alternatively, they may cancel the tariffs pursuant to normal tariff cancellation procedures provided they honor existing wireline broadband Internet access transmission arrangements in another manner. To the extent facilities-based wireline broadband Internet access transmission providers have entered into any other common carrier transmission arrangements with ISP customers that are not subject to tariffing, these arrangements must also be continued during the one-year transition unless, of course, they would otherwise expire during the transition period pursuant to their pre-existing terms. Upon the effective date of this Order, facilities-based wireline broadband Internet access providers, including the BOCs and their affiliates, are no longer required to continue taking the existing common carrier transmission arrangements that they provide to ISPs as an input to their self-provided wireline broadband Internet access service. To the extent facilities-based carriers offer new wireline broadband Internet access transmission arrangements after the effective date of this Order or provide such service to new customers, these arrangements may be made available on a common carrier basis or a non-common carrier basis as set forth above.

29. This one-year period will allow ISPs to continue operating under their current arrangements while they negotiate non-common carrier agreements with providers of wireline broadband Internet access transmission. Based on the assurances made by facilities-based wireline broadband Internet access providers and their stated desire to ensure that their platform is competitive with other broadband platforms, we strongly encourage the parties to work together to develop individual contracts that are mutually beneficial to each party. In the meantime, the ability to continue operating under existing arrangements for an additional one-year period during new contract negotiations will avoid unnecessary customer disruption. Such a transition period is consistent with previous decisions in which the Commission modified the regulatory framework for certain services subject to a transition.

30. *Discontinuation of Service.* Section 214(a) of the Act requires that, prior to discontinuing any interstate or foreign telecommunications service, a telecommunications carrier obtain from the Commission ''a certification that neither the present nor future public convenience or necessity will be adversely affected thereby.'' The reasons that persuade us not to require that the transmission component of wireline broadband Internet access service continue to be offered as a telecommunications service under Title II also persuade us that discontinuance of the provision of common carrier broadband Internet access transmission services to existing customers would not adversely affect the present or future public convenience or necessity. Instead, competition from other broadband Internet access service providers and the wireline providers' business incentives to attract ISP customers should ensure the continued availability of this transmission component, under reasonable rates, terms, and conditions. Accordingly, we find that the circumstances here meet our test for determining whether a telecommunications service may be discontinued under section 214(a).

31. Therefore, pursuant to our rule for discontinuing domestic telecommunications services, 47 CFR 63.71, we grant facilities-based, wireline broadband Internet access transmission providers blanket certification to

discontinue providing existing customers the common carrier broadband Internet access transmission services that are the subject of this Order, subject to the following conditions. First, to protect these customers against abrupt termination of service, we require that a carrier discontinuing common carrier broadband Internet access transmission service shall provide affected customers with advance notice of the discontinuance. Specifically, the carrier shall provide all affected customers with its name and address, the date of the planned discontinuance, the geographic areas where service will be discontinued, and a brief description of the service to be discontinued. In addition, on or after the date it provides the advance notice to its customers and at least 30 days prior to the date on which service will be discontinued, the carrier must file with the Commission notice of its intent to discontinue service. Carriers are not required to make any showing in this notice and do not need to obtain any additional permission from the Commission to cease service. Upon notification of discontinuance, the Commission reserves the right to take actions where appropriate under the circumstances to protect the public interest.

32. *Classification of Wireline Broadband Internet Access Transmission Component.* Above, we affirm that wireline broadband Internet access service is an information service, and decline to continue the reflexive application of the *Computer Inquiry* regime to facilities-based providers of such service. This is not, however, the end of our inquiry. The Wireline Broadband Notice also sought comment on the legal classification of the transmission component underlying facilities-based wireline broadband Internet access service. In contrast to the classification of wireline broadband Internet access service as an information service, there is considerable disagreement in the record as to the appropriate classification of the transmission component of such Internet access service. The legal classification of this transmission component has certain regulatory implications for its provider. Specifically, if the transmission component is a telecommunications service under the Act, providers of that service are subject to common carrier regulation under Title II of the Act in their provision of that service. Conversely, if the transmission component is not a telecommunications service under the Act, providers of that component are not subject to Title II requirements, except to the extent the Commission imposes similar or identical obligations pursuant to its Title I ancillary jurisdiction.

33. We address two circumstances under which the statutory classification of the transmission component arises: The provision of transmission as a wholesale input to ISPs (including affiliates) that provide wireline broadband Internet access service to end users, and the use of transmission as part and parcel of a facilities-based provider's offering of wireline broadband Internet access service using its own transmission facilities to end users. First, we address the wholesale input. Nothing in the Communications Act compels a facilities-based provider to offer the transmission component of wireline broadband Internet access service as a telecommunications service to anyone. Furthermore, consistent with the NARUC precedent, *National Ass'n of Reg. Utils. Comm'rs* v. *FCC*, 525 F.2d 630, 642 (DC Cir. 1976), *cert. denied*, 425 U.S. 992 (1976), the transmission component of wireline broadband Internet access service is a telecommunications service only if one of two conditions is met: the entity that provides the transmission voluntarily undertakes to provide it as a telecommunications service; or the Commission mandates, in the exercise of our ancillary jurisdiction under Title I, that it be offered as a telecommunications service. As to the first condition, we explain above that carriers may choose to offer this type of transmission as a common carrier service if they wish. In that circumstance, it is of course a telecommunications service. Otherwise, however, is it not, as we would not expect an ''indifferent holding out'' but a collection of individualized arrangements. As to the second condition, based on the record, we decline to continue our reflexive application of the *Computer Inquiry* requirement, which compelled the offering of a telecommunications service to ISPs. Thus, we affirm that neither the statute nor relevant precedent mandates that broadband transmission be a telecommunications service when provided to an ISP, but the provider may choose to offer it as such.

34. Second, we address the use of the transmission component as part of a facilities-based provider's offering of wireline broadband Internet access service to end users using its own transmission facilities. We conclude, consistent with *Brand X*, that such a transmission component is mere ''telecommunications'' and not a ''telecommunications service.'' As stated above, the Act in section 153(46) defines telecommunications service as ''the offering of telecommunications for a fee directly to the public, or to such classes of users as to be effectively available directly to the public, regardless of the facilities used.'' Thus, whether a telecommunications service is being provided turns on what the entity is ''offering * * * to the public,'' and customers' understanding of that service. End users subscribing to wireline broadband Internet access service expect to receive (and pay for) a finished, functionally integrated service that provides access to the Internet. End users do not expect to receive (or pay for) two distinct services—both Internet access service and a distinct transmission service, for example. Thus, the transmission capability is part and parcel of, and integral to, the Internet access service capabilities. Accordingly, we conclude that wireline broadband Internet access service does not include the provision of a telecommunications service to the end user irrespective of how the service provider may decide to offer the transmission component to other service providers.

35. *Effect on Existing Obligations.* The Wireline Broadband Notice sought comment on what effect classifying wireline broadband Internet access service as an information service would have on other regulatory obligations. Title II obligations have never generally applied to information services, including Internet access services. Instead, when the Commission has deemed it necessary to impose regulatory requirements on information services, it has done so pursuant to its Title I ancillary jurisdiction. Indeed, as noted above, the Commission imposed the *Computer Inquiry* obligations on facilities-based common carriers pursuant to its Title I ancillary jurisdiction. Similarly, the Commission has exercised its ancillary jurisdiction under Title I to extend accessibility obligations that mirror those under section 255 to certain information services, *i.e.*, voicemail and interactive menu service. The Commission's ancillary jurisdiction under Title I to impose regulatory obligations on broadband Internet access service providers was recently recognized by the Supreme Court in *Brand X*.

36. The Commission may exercise its ancillary jurisdiction when Title I of the Act gives the Commission subject matter jurisdiction over the service to be regulated and the assertion of jurisdiction is ''reasonably ancillary to the effective performance of [its] various

responsibilities.'' *United States* v. *Southwestern Cable Co.*, 392 U.S. 157, 178 (1968). We recognize that both of the predicates for ancillary jurisdiction are likely satisfied for any consumer protection, network reliability, or national security obligation that we may subsequently decide to impose on wireline broadband Internet access service providers.

37. First, we find that we have subject matter jurisdiction over providers of broadband Internet access services. These services are unquestionably ''wire communication'' as defined in section 3(52) because they transmit signals by wire or cable, or they are ''radio communication'' as defined in section 3(33) if they transmit signals by radio. The Act gives the Commission subject matter jurisdiction over ''all interstate and foreign communications by wire or radio * * * and * * * all persons engaged within the United States in such communication'' in section 2(a). Second, with regard to consumer protection obligations, we find that regulations would be ''reasonably ancillary'' to the Commission's responsibility to implement sections 222 (customer privacy), 255 (disability access), and 258 (slamming and truth-in-billing), among other provisions, of the Act. Similarly, network reliability, emergency preparedness, national security, and law enforcement requirements would each be reasonably ancillary to the Commission's obligation under section 151 of the Act to make available ''a rapid, efficient, Nation-wide, and world-wide wire and radio communication service * * * for the purpose of the national defense [and] for the purpose of promoting safety of life and property through the use of wire and radio communication.''

38. *Federal Universal Service Contribution Obligations.* In section 254 of the Act, Congress codified our Federal universal service programs to ensure affordable telecommunications services to all Americans, including consumers living in high-cost areas, low income consumers, eligible schools and libraries, and rural health care providers. In this section, we address the universal service contribution obligations of providers of wireline broadband Internet access service. Section 254(d) of the Act states that ''[e]very telecommunications carrier that provides interstate telecommunications services shall contribute'' to universal service. In the Universal Service Order (62 FR 32862, June 17, 1997), the Commission interpreted the first sentence of section 254(d) as imposing a mandatory contribution requirement on all telecommunications carriers that provide interstate telecommunications services. We note that the Commission also has permissive authority under section 254(d) to require any provider of interstate telecommunications to contribute to the preservation and advancement of universal service if the public interest so requires. In the Wireline Broadband Notice, the Commission recognized that, under its existing rules and policies, telecommunications carriers providing telecommunications services, including broadband transmission services, are subject to universal service contribution requirements.

39. Congress required in section 254 of the Act that ''[t]here should be specific, predictable, and sufficient Federal and State mechanisms to preserve and advance universal service.'' Accordingly, we conclude that facilities-based providers of wireline broadband Internet access services must continue to contribute to existing universal service support mechanisms based on the current level of reported revenue for the transmission component of their wireline broadband Internet access services for a 270-day period after the effective date of this Order or until we adopt new contribution rules in the Universal Service Contribution Methodology proceeding (67 FR 79543, Dec. 30, 2002), whichever occurs earlier. That is, wireline broadband Internet access providers must maintain their current universal service contribution levels attributable to the provision of wireline broadband Internet access service for this 270-day period. We take this action, as a matter of policy, to preserve existing levels of universal service funding, and prevent a precipitous drop in fund levels while we consider reform of the system of universal service in the Universal Service Contribution Methodology proceeding. We are committed to ensuring that there continue to be specific, predictable, and sufficient Federal and State mechanisms to preserve and advance universal service. If we are unable to complete new contribution rules within the 270-day period of time, the Commission will take whatever action is necessary to preserve existing funding levels, including extending the 270-day period discussed above or expanding the contribution base. We have ample authority to take interim actions to preserve the status quo.

40. *Law Enforcement, National Security, and Emergency Preparedness: CALEA.* The Communications Assistance for Law Enforcement Act (CALEA) requires telecommunications carriers to ensure that ''equipment, facilities or services that provide a customer or subscriber with the ability to originate, terminate, or direct [communications]'' are capable of providing authorized surveillance to law enforcement agencies. In a separate order also released on September 23, 2005, *Communications Assistance for Law Enforcement Act and Broadband Access and Services,* ET Docket No. 04–295, First Report and Order and Further Notice of proposed Rulemaking, FCC 05–153 (released September 23, 2005), we conclude that providers of facilities-based broadband Internet access service, regardless of platform, are subject to CALEA. We therefore do not address CALEA issues in this Order.

41. *USA PATRIOT Act.* We find that our actions in this Order will not affect the government's implementation or enforcement of the Uniting and Strengthening America by Providing Appropriate Tools Required to Intercept and Obstruct Terrorism Act of 2001 (USA PATRIOT Act). This Act amended the Federal criminal code to authorize the interception of wire and electronic communications for the production of evidence of terrorism offenses and computer fraud, and modified only one section of the Communications Act, section 631 of Title VI. We conclude that the scope of activities covered under the definitions of wire communications and electronic communications is broad enough to encompass wireline broadband Internet access service regardless of the legal classification of this service, or its transmission component, under the Communications Act. Only one party submitted comments on the subject, agreeing that the legal classification of wireline broadband Internet access service as an information service will have no impact on the applicability of the USA PATRIOT Act.

42. *Emergency Preparedness and Response.* We find that our classification of wireline broadband Internet access service as an information service, and the transmission input as telecommunications (except to the extent that the provider chooses to offer that transmission on a common carrier basis), will not affect the Commission's existing rules implementing the National Security Emergency Preparedness (NSEP) Telecommunications Service Priority (TSP) System. But, we will nonetheless exercise our Title I authority, as necessary, to give full effect to the principles and purpose of the NSEP TSP System. The NSEP TSP System is set forth in appendix A to part 64 of the rules and provides that the Commission has ''authority over the assignment and

approval of priorities for provisioning and restoration of common carrier-provided telecommunications services.'' The facilities-based wireline broadband Internet access service providers that are the subject of our Order today are telecommunications carriers with respect to other services that they provide. Therefore, we find that these providers remain subject to the NSEP TSP.

43. The Secretary of Defense (Secretary), the only party to submit comments on this issue, expressed concern that the existing National Communications System programs will no longer apply to wireline broadband Internet access service if it is classified as an information service unless the Commission exercises its ancillary jurisdiction. As the Secretary recognizes, NSEP communications are currently provided by carriers subject to Title II. Information service providers, therefore, have not been subject to these rules unless those providers are also offering services as telecommunications carriers. Since the actions we take in this Order affect only wireline carriers that provide the transmission component of wireline broadband Internet access service, we have no reason to expect that those actions will adversely affect emergency preparedness efforts. These service providers, for the most part, provide their wireline broadband Internet access services over the same facilities used to provide other telecommunications services and thus these facilities remain subject to part 64 to the same extent as they have before. Moreover, we do agree with the Secretary's conclusion that, should the need arise, we do have the authority to regulate NSEP under Title I. We will closely monitor the development of wireline broadband Internet access service and its effect on the NSEP TSP System and, if needed, will expeditiously take all appropriate actions to promote the viability of that system.

44. Moreover, we state that our decision to classify wireline broadband Internet access service as an information service, and the transmission input as telecommunications (except when offered on a common carrier basis), has no effect whatsoever on our recently adopted E911 rules for interconnected VoIP providers (*VOIP E911 Order,* 70 FR 37273, June 29, 2005). In that Order, we required providers of interconnected VoIP to offer E911 service to their subscribers. Although interconnected VoIP is necessarily provided via broadband, nothing in the VoIP E911 Order in any way turns on the statutory classification of that broadband connection. Thus, we reaffirm that, after today's Order, interconnected VoIP providers must comply with the VoIP E911 Order regardless of how or by whom the underlying broadband connection is provided.

45. *Network Reliability and Interoperability.* We reject arguments that classifying wireline broadband Internet access service as an ''information service'' and its transmission component as ''telecommunications'' (except to the extent that the provider chooses to offer that transmission on a common carrier basis) requires that we obtain additional authorization from the Network Reliability and Interoperability Council (NRIC) at this time. NRIC, initially established by the Commission in 1992 as the Network Reliability Council, advises the Commission on recommendations to ensure optimal reliability and interoperability of the nation's communications networks. Section 256 of the Act codifies the Commission's ability and obligation to oversee network planning and set standards to enable the Commission to carry out the objectives of this section as well as the Commission's prior practices in the area of network reliability and interoperability through the NRIC. NRIC VI, the latest chartered council, significantly expanded its membership to include the Internet service industry and included among its scope of activities numerous issues relating to the Internet and broadband deployment.

46. Contrary to what some commenters suggest, we do not agree that classifying wireline broadband Internet access service as an information service would deny us the ability to oversee broadband interconnectivity. Rather, we agree with the view that our actions in this proceeding will not constrain our ability to address network reliability and interoperability issues. A purpose of section 256 is ''to ensure the ability of users and information providers to seamlessly and transparently transmit and receive information between and across telecommunications networks.'' This provision affords the Commission adequate authority to continue overseeing broadband interconnectivity and reliability issues, regardless of the legal classification of wireline broadband Internet access service. Moreover, NRIC's current charter directs it to make recommendations to increase the deployment and improve the security, reliability, and interoperability of ''high-speed residential Internet access service,'' and we find that its activities in this regard are consistent with section 256.

47. *Access by Persons with Disabilities.* Section 255(c) of the Act requires that ''a provider of telecommunications service shall ensure that the service is accessible to and usable by individuals with disabilities, if readily achievable.'' Like the other Title II obligations discussed above, section 255 expressly applies to telecommunications services, not information services. Although the requirements contained in section 255 do not apply to information services, in the past the Commission has exercised its ancillary jurisdiction under Title I to extend accessibility obligations that mirror those under section 255 to two critically important information services, voicemail and interactive menu service. This Order does not affect voicemail or interactive menu service providers' obligations or other telecommunications service providers' obligations under section 255(c). We will continue to exercise our Title I authority, as necessary, to give full effect to the accessibility policy embodied in section 255.

48. In addition, section 225(b) directs the Commission to ensure ''telecommunications relay services'' (TRS), a set of services that includes both video relay service (VRS) and IP relay, are available to individuals with hearing or speech impairments. The Commission has previously determined that the statutory definition of TRS includes both information services and telecommunications services (65 FR 38432, June 21, 2000). Nothing in this Order disturbs that earlier conclusion; consequently, this Order will not affect TRS requirements or the ability of TRS users to access VRS or IP relay.

49. In addition, the Commission will remain vigilant in monitoring the development of wireline broadband Internet access service and its effects on the important policy goals of section 255. As noted above, we will exercise our ancillary jurisdiction to ensure achievement of important policy goals of section 255 and also section 225 of the Act.

50. Consistent with our decision today to require facilities-based wireline broadband Internet access service providers to continue to contribute to universal service support mechanisms for an additional 270-day period, as a matter of policy, we also require such providers to report the revenue on the Commission's FCC Form 499–A associated with the transmission component of their wireline broadband Internet access service as of the effective date of this Order for an additional 270-

day period for purposes of contributing to the TRS fund for that same 270-day period.

51. *NANPA Funding.* Pursuant to this same interim authority, we require facilities-based wireline broadband Internet access service providers to continue to contribute to the cost of numbering administration through the NANPA funding mechanism established by the Commission pursuant to section 251(e) of the Act for the same 270-day period. We take this action to ensure that the funding for this critical function does not immediately decrease while the Commission examines what, if any funding related obligations should apply to facilities-based broadband Internet access service providers. Section 251(e)(2) requires that ''[t]he cost of establishing telecommunications numbering administration arrangements * * * be borne by all telecommunications carriers on a competitively neutral basis as determined by the Commission.'' In carrying out this statutory directive, the Commission adopted 47 CFR 52.17 of its rules, which requires, among other things, that all telecommunications carriers contribute toward the costs of numbering administration on the basis of their end-user telecommunications revenues for the prior calendar year.

52. *Obligations of Incumbent LECs Under Section 251.* The Wireline Broadband Notice sought comment on the relationship between a competitive LEC's rights under section 251 and the Commission's tentative conclusion that wireline broadband Internet access service is an information service with a telecommunications input. Several competitive LECs, and one BOC, argue that regardless of how the Commission classifies wireline broadband Internet access service, including its transmission component, competitive LECs should still be able to purchase UNEs, including UNE loops to provide stand-alone DSL telecommunications service, pursuant to section 251(c)(3) of the Act. We agree.

53. Section 251(c)(3) and the Commission's rules look at what use a competitive LEC will make of a particular network element when obtaining that element pursuant to section 251(c)(3); the use to which the incumbent LEC puts the facility is not dispositive. In this manner, even if an incumbent LEC is only providing an information service over a facility, we look to see whether the requesting carrier intends to provide a telecommunications service over that facility. Thus, competitive LECs will continue to have the same access to UNEs, including DS0s and DS1s, to which they are otherwise entitled under our rules, regardless of the statutory classification of service the incumbent LECs provide over those facilities. So long as a competitive LEC is offering an ''eligible'' telecommunications service under (which is not exclusively long distance or mobile wireless services) it may obtain that element as a UNE. See, *e.g.*, 47 CFR 51.309(b), (d). Accordingly, nothing in this Order changes a requesting telecommunications carriers' UNE rights under section 251 and our implementing rules.

54. *Cost Allocation.* In this section, we address cost allocation issues raised by our decision to allow incumbent LECs to enter into non-common carriage arrangements with affiliated and unaffiliated ISPs for the provision of wireline broadband Internet access transmission using facilities that are also used for provision of regulated telecommunications services. Specifically, we address whether we should require incumbent LECs subject to our part 64 cost allocation rules to classify that activity as a regulated activity, as opposed to a nonregulated activity, under our part 64 cost allocation rules. We conclude that incumbent LECs should classify this non-common carrier activity as a regulated activity under those rules and that this accounting treatment is consistent with section 254(k) of the Act.

55. In this Order, we allow the non-common carrier provision of wireline broadband Internet access transmission that we previously have treated as regulated, interstate special access service, but we do not preemptively deregulate any service currently regulated by any state. Therefore, as specified in 47 CFR 32.23, the provision of this transmission is to be classified as a regulated activity under part 64 ''until such time as the Commission decides otherwise.'' We do not ''decide otherwise'' at this time because we find that the costs of changing the federal accounting classification of the costs underlying this transmission would outweigh any potential benefits and that section 254(k) of the Act does not mandate such a change.

56. Because the costs of requiring that incumbent LECs classify their non-common carrier, broadband Internet access transmission operations as nonregulated activities under part 64 exceed the potential benefits, we decline to require such a classification. Classifying those operations as regulated under part 32 means that any necessary ratemaking adjustments, including any reallocations of costs, will be addressed in the ratemaking process in the relevant regulatory jurisdiction. In our case, that is the interstate jurisdiction. Currently, some price cap carriers treat broadband special access services as price cap services, while others treat these broadband services as services excluded from price caps. Price cap carriers that have tariffed these services under price caps, and that choose to replace these tariffed services with non-common carriage arrangements, will make the appropriate adjustments to the actual price index (API) and price cap index (PCI) for the special access basket. The ordinary application of the price cap rate formulas will ensure that other special access rates remain consistent with the price cap rules after deregulation of broadband transmission services. Carriers that have excluded broadband transmission services from price caps will not need to make these adjustments.

57. Our ruling here with respect to the accounting treatment of broadband Internet access transmission provided on a non-common carrier basis does not change the accounting treatment that applies to broadband Internet access service provided to end users. That is, and always has been, an information service. An incumbent LEC that offers this service must continue to account for it as a nonregulated activity.

58. We note that our decision to treat the non-common carrier provision of broadband Internet access transmission as a regulated activity under part 64 will affect the results of computations of the rate of return earned on interstate Title II services. This is not a matter of practical concern with respect to most incumbent LECs regulated under the CALLS plan (65 FR 38684, June 21, 2000) or price caps, because earnings determinations are not used in determining their price cap rates. In the event that an earnings determination is needed for some ratemaking purpose, the affected carrier will have to propose a way of removing the costs of any non-Title II services from the computation. Price cap carriers that have not taken advantage of pricing flexibility, and therefore are still able to take advantage of low-end adjustments to their price cap rates, will have to address this cost allocation issue if and when they seek a low-end adjustment.

59. Finally, all rate-of-return carriers that have participated in this proceeding have stated that they wish to continue offering broadband transmission as a Title II common carrier service. We have provided them with this option. As such, we do not, at this time, address the treatment of private carriage arrangements by rate-of-return carriers

because the issue is entirely hypothetical.

60. *Section 254(k).* Section 254(k) of the Act states that a telecommunications carrier ''may not use services that are not competitive to subsidize services that are subject to competition.'' That section also requires the Commission to establish, with respect to interstate services, accounting and cost allocation rules that ensure that ''services included in the definition of universal service bear no more than a reasonable share of the joint and common costs of facilities used to provide those services.'' By continuing to treat the provision of wireline broadband transmission as a regulated activity under part 64, we do not change the regulatory cost allocation treatment and thus do not change their status under section 254(k). Our actions in this Order therefore do not create a violation of section 254(k).

61. We find that section 254(k) of the Act does not mandate allocation of interstate loop costs to non-common carrier broadband Internet access transmission. Under the CALLS access charge plan (65 FR 38684, June 21, 2000), the interstate loop costs of price cap carriers are not assigned to the different services that subscribers may receive over the loop, but are recovered directly from end users through the subscriber line charge. The Commission explicitly found that section 254(k) did not prohibit this cost recovery mechanism (65 FR 38684, June 21, 2000), and the Fifth Circuit upheld this finding, *Texas Office of Public Utility Counsel* v. *FCC,* 265 F.3d 313, 323–324 (5th Cir. 2001).

62. The subscriber line charge is not itself a ''service included in the definition of universal service.'' The interstate loop costs recovered through the subscriber line charge represent the costs of all jurisdictionally interstate uses of the loop. Since 1998, those uses have included both services supported by universal service, such as access to interexchange service, and broadband special access services, which are not supported by universal service. Costs need not be reallocated at this time from the subscriber line charge to non-common carrier, broadband Internet access transmission in order to prevent imposition of an unreasonable level of joint and common costs on services included in the definition of universal services. This is not, as State Consumer Advocates claim, unreasonable. Rather, it is a reasonable and rational cost allocation approach. We can take additional steps to address cost allocation issues in the future if the need arises.

63. We observe that NARUC and the State Consumer Advocates appear to assume that any reallocation of loop costs to broadband Internet access transmission would be given effect in the ratemaking process in such a way that consumers who do not receive wireline broadband Internet access service over their loops would have their tariffed rates reduced. This ratemaking approach would likely produce a relatively small per-line rate reduction for the large number of consumers who do not receive this broadband service, while leaving a larger per-line amount to be recovered from the smaller number of consumers who receive both narrowband and broadband services over their loops. This form of cost reallocation produces anomalous results, and we do not adopt it. It would cause a consumer who buys the two services over the same loop to pay much more for that facility than a consumer who buys only narrowband service, even though the cost of that facility is fixed and does not vary in proportion to usage. It would be possible to devise a scheme in which costs were reallocated only with respect to those loops on which both services are being provided, but this would seem to produce only a shifting of charges from one part of the customer's bill to another.

64. We note that the question whether there should be any changes to the jurisdictional allocation of loop costs in light of use of the loop for broadband services was referred to the Federal-State Joint Board on Separations in 1999. Specifically, in the wake of the Commission's determination in its 1999 tariff investigation that GTE's ADSL service was an interstate special access service subject to federal tariffing, NARUC filed a petition for clarification regarding the proper allocation under part 36 of the Commission's rules of loop costs associated with DSL services, *GTE Telephone Operating Cos. GTOC Tariff No. 1, GTOC Transmittal No. 1148,* 17 FCC Rcd 27409 (1999). Noting that issues associated with how to allocate local loop plant between voice and data services for purposes of jurisdictional separations were beyond the scope of the limited investigation in the tariff proceeding, the Commission stated that it would address these important issues in conjunction with the Joint Board, *GTE Telephone Operating Cos. GTOC Tariff No. 1, GTOC Transmittal No. 1148,* 17 FCC Rcd at 27412, para. 9. This issue remains pending. In any event, separations is now subject to a five-year freeze, and the Joint Board is working on the approach that should follow this freeze; the issues we describe in this Order already fall within this context. After the Joint Board makes its recommendation, we can reexamine the question of how any additional costs that might be assigned to the interstate jurisdiction may be recovered by local exchange carriers.

65. *Enforcement.* We intend to swiftly and vigorously enforce the terms of this Order. Significantly, through review of consumer complaints and other relevant information, we will monitor all consumer-related problems arising in this market and take appropriate enforcement action where necessary. Similarly, we will continue to monitor the interconnection and interoperability practices of all industry participants, including facilities-based Internet access providers, and reserve the ability to act under our ancillary authority in the event of a pattern of anti-competitive conduct.

Final Paperwork Reduction Act Analysis

66. This Report and Order does not contain any information collection subject to the Paperwork Reduction Act of 1995 (PRA), Public Law 104–13. In addition, therefore, it does not contain any new or modified ''information collection burden for small business concerns with fewer than 25 employees,'' pursuant to the Small Business Paperwork Relief Act of 2002, Public Law 107–198, see 44 U.S.C. 3506(c)(4).

Final Regulatory Flexibility Certification

67. As required by the Regulatory Flexibility Act, see 5 U.S.C. 603, the Commission has prepared a Final Regulatory Flexibility Certification of the possible significant economic impact on small entities of the policies and rules addressed in this Report and Order.

68. The Regulatory Flexibility Act of 1980, as amended (RFA), requires that a regulatory flexibility analysis be prepared for notice-and-comment rulemaking proceedings, unless the agency certifies that ''the rule will not, if promulgated, have a significant economic impact on a substantial number of small entities.'' The RFA generally defines the term ''small entity'' as having the same meaning as the terms ''small business,'' ''small organization,'' and ''small governmental jurisdiction.'' In addition, the term ''small business'' has the same meaning as the term ''small business concern'' under the Small Business Act. A ''small business concern'' is one which: (1) Is

independently owned and operated; (2) is not dominant in its field of operation; and (3) satisfies any additional criteria established by the Small Business Administration (SBA).

69. In the Wireline Broadband Notice, the Commission sought comment generally on the appropriate statutory classification for wireline broadband Internet access service provided over a provider's own facilities, and on what regulatory requirements, if any, should be imposed on the telecommunications component of wireline broadband Internet access service. Specifically, the Commission sought comment on whether the *Computer Inquiry* requirements should be modified or eliminated as applied to self-provisioned wireline broadband Internet access service, as well as how the Commission's tentative conclusion that wireline broadband Internet access service is an information service would affect the CALEA assistance capabilities, the USA PATRIOT Act, other national security or emergency preparedness obligations, network reliability and interoperability, and existing consumer protection requirements, such as § 214 of the Act, CPNI requirements under section 222 of the Act, and requirements for access to persons with disabilities under section 255 of the Act. The Commission also sought comment on how to continue to meet the goals of universal service under section 254 of the Act in a marketplace where competing providers are deploying broadband Internet access, including how the regulatory status of wireline broadband Internet access could impact the system of assessments and contributions to universal service. Finally, the Wireline Broadband Notice also invited comment on the relationship between the statutory classification of wireline broadband Internet access service and an incumbent LEC's obligation to provide access to UNEs under sections 251 and 252.

70. The Order eliminates the *Computer Inquiry* requirements on facilities-based carriers in their provision of wireline broadband Internet access service. Consequently, BOCs are immediately relieved of the separate subsidiary, CEI, and ONA obligations with respect to wireline broadband Internet access services. In addition, subject to a one-year transition period for existing wireline broadband transmission services, all wireline broadband Internet access service providers are no longer subject to the *Computer II* requirement to separate out the underlying transmission from wireline broadband Internet access service and offer it on a common carrier basis. We determine in this Order that wireline broadband Internet access service is an information service, as that term is defined in the statute. To the extent that the regulatory obligations discussed above apply to the transmission component of wireline broadband Internet access service when provided to ISPs or others on a stand-alone common carrier basis, these obligations will continue to apply when carriers offer broadband Internet access service transmission on a common carrier basis, both during the transition and thereafter.

71. The rule changes adopted in this Order apply, for the most part, only to BOCs (*Computer Inquiry* separate subsidiary, CEI, and ONA obligations with respect to wireline broadband Internet access services). In addition, all facilities-based wireline broadband Internet access service providers are no longer subject to the *Computer II* requirement to separate out the underlying transmission. Neither the Commission nor the SBA has developed a small business size standard specifically applicable to providers of incumbent local exchange service and interexchange services. The closest applicable size standard under the SBA rules is for Wired Telecommunications Carriers. This provides that such a carrier is a small entity if it employs no more than 1,500 employees. None of the four BOCs that would be affected by amendment of these rules meets this standard. To the extent that any other wireline provider would be classified as a small entity, it would not be negatively affected by the regulatory relief we grant in this Order.

72. Therefore, we certify that the requirements of the Order will not have a significant economic impact on a substantial number of small entities. We note that one party, TeleTruth, filed comments in response to the IFRAs in the Wireline Broadband Notice and Incumbent LEC Broadband Notice proceedings. TeleTruth argues that these IRFAs are deficient because they fail to assess the potential impact of the actions proposed in those proceedings on small ISPs and small competitive LECs and that our implementation of the RFA is otherwise deficient. These arguments are identical to, and indeed filed as part of the same pleading as, arguments the Commission previously has rejected. We therefore again reject these arguments for the reasons stated in our prior Orders responding to TeleTruth's comments.

73. The Commission will send a copy of the Order, including a copy of this Final Regulatory Flexibility Certification, in a report to Congress pursuant to the Congressional Review Act. In addition, the Order and this final certification will be sent to the Chief Counsel for Advocacy of the SBA, and a summary of the Order and final certification will be published in the **Federal Register**.

Ordering Clauses

74. Accordingly, *It is ordered* that, pursuant to sections 1–4, 10, 201–205, 214, 222, 225, 251, 252, 254–256, 258, 303(r) of the Communications Act of 1934, as amended, 47 U.S.C. 151–154, 160, 201–205, 214, 222, 225, 251, 252, 254–256, 258, 303(r), and section 706 of the Telecommunications Act of 1996, 47 U.S.C. 157 nt, the Report and Order and Notice of Proposed Rulemaking are adopted.

75. *It is further ordered,* pursuant to sections 1–4, 10, 201–205, 214, 222, 225, 251, 252, 254–256, 258, 303(r) of the Communications Act of 1934, as amended, 47 U.S.C. 151–154, 160, 201–205, 214, 222, 225, 251, 252, 254–256, 258, 303(r), and section 706 of the Telecommunications Act of 1996, 47 U.S.C. 157 nt, that wireline broadband Internet access transmission providers are granted blanket certification to discontinue the provision of common carrier broadband Internet access transmission services to existing customers as set forth and subject to the conditions stated in this Order.

76. *It is further ordered,* pursuant to sections 1–4, 10, 201–205, 214, 222, 225, 251, 252, 254–256, 258, 303(r) of the Communications Act of 1934, as amended, 47 U.S.C. 151–154, 160, 201–205, 214, 222, 225, 251, 252, 254–256, 258, 303(r), and section 706 of the Telecommunications Act of 1996, 47 U.S.C. 157 nt, that the Conditional Petition for Forbearance Under 47 U.S.C. 160(c) filed by the Verizon Telephone Companies in WC Docket No. 04–242 on June 28, 2004, is denied as moot.

77. *It is further ordered,* pursuant to sections 1–4, 10, 201–205, 214, 222, 225, 251, 252, 254–256, 258, 303(r) of the Communications Act of 1934, as amended, 47 U.S.C. 151–154, 160, 201–205, 214, 222, 225, 251, 252, 254–256, 258, 303(r), and section 706 of the Telecommunications Act of 1996, 47 U.S.C. 157 nt, that the Petition for Declaratory Ruling or, Alternatively, for Interim Waiver filed in WC Docket No. 04–242 by the Verizon Telephone Companies on June 28, 2004, is dismissed as moot.

78. *It is further ordered,* pursuant to §§ 1.103(a) and 1.427(b) of the Commission's rules, 47 CFR 1.103(a), 1.427(b), that this Report and Order

shall be effective 30 days after publication of the Report and Order in the **Federal Register**.

79. *It is further ordered* that the Commission's Consumer and Governmental Affairs Bureau, Reference Information Center, shall send a copy of this Order, including the Final Regulatory Flexibility Certification, to the Chief Counsel for Advocacy of the Small Business Administration.

List of Subjects in 47 CFR Parts 51, 63, 64

Communications, Telephone, Broadband Internet access services.

Federal Communications Commission.

Marlene H. Dortch,

Secretary.

[FR Doc. 05–20830 Filed 10–14–05; 8:45 am]

BILLING CODE 6712–01–U

Proposed Rules

Federal Register
Vol. 70, No. 199
Monday, October 17, 2005

This section of the FEDERAL REGISTER contains notices to the public of the proposed issuance of rules and regulations. The purpose of these notices is to give interested persons an opportunity to participate in the rule making prior to the adoption of the final rules.

FEDERAL RESERVE SYSTEM

12 CFR Part 226

[Regulation Z; Docket No. R–1217]

Truth in Lending

AGENCY: Board of Governors of the Federal Reserve System.

ACTION: Request for comments; extension of comment period.

SUMMARY: The Board is publishing for public comment a second advance notice of proposed rulemaking (ANPR) regarding the open-end (revolving) credit rules of the Board's Regulation Z, which implements the Truth in Lending Act (TILA). The Board periodically reviews each of its regulations to update them, if necessary. In December 2004, the Board published an initial ANPR to commence a comprehensive review of the open-end credit rules. The ANPR sought public comment on a variety of issues relating to the format of open-end credit disclosures, the content of disclosures, and the substantive protections provided under the regulation. The comment period closed on March 28, 2005. On April 20, 2005, President Bush signed into law the Bankruptcy Abuse Prevention and Consumer Protection Act of 2005 (Bankruptcy Act), which contains several amendments to TILA, including provisions concerning open-end credit disclosures. The Board plans to implement the amendments to TILA as part of its review of Regulation Z, and is publishing this second ANPR to reopen and extend the public comment period to obtain comments on implementing the Bankruptcy Act's amendments to TILA.

DATES: Comments must be received on or before December 16, 2005.

ADDRESSES: You may submit comments, identified by Docket No. R–1217, by any of the following methods:

- Agency Web Site: *http://www.federalreserve.gov.* Follow the instructions for submitting comments at *http://www.federalreserve.gov/generalinfo/foia/ProposedRegs.cfm.*
- Federal eRulemaking Portal: *http://www.regulations.gov.* Follow the instructions for submitting comments.
- E-mail: *regs.comments@federalreserve.gov.* Include the docket number in the subject line of the message.
- FAX: 202/452–3819 or 202/452–3102.
- Mail: Jennifer J. Johnson, Secretary, Board of Governors of the Federal Reserve System, 20th Street and Constitution Avenue, NW., Washington, DC 20551.

See Supplementary Information, Section I., for further instructions on submitting comments.

All public comments are available from the Board's Web site at *http://www.federalreserve.gov/generalinfo/foia/ProposedRegs.cfm* as submitted, except as necessary for technical reasons. Accordingly, your comments will not be edited to remove any identifying or contact information. Public comments may also be viewed electronically or in paper in Room MP–500 of the Board's Martin Building (20th and C Streets, NW.) between 9 a.m. and 5 p.m. on weekdays.

FOR FURTHER INFORMATION CONTACT: Krista P. DeLargy, Senior Attorney, Jane E. Ahrens, Senior Counsel, or Elizabeth A. Eurgubian, Attorney, Division of Consumer and Community Affairs, Board of Governors of the Federal Reserve System, at (202) 452–3667 or 452–2412; for users of Telecommunications Device for the Deaf (''TDD'') only, contact (202) 263–4869.

SUPPLEMENTARY INFORMATION:

I. Form of Comment Letters

In December 2004, the Board initiated a comprehensive review of the open-end credit rules in Regulation Z by issuing an advance notice of proposed rulemaking (ANPR) that contained 58 specific questions. This document supplements that ANPR by requesting data or comment on specific issues relating to the Truth in Lending Act provisions in the new Bankruptcy Abuse Prevention and Consumer Protection Act of 2005. Consequently, the requests in this document are numbered consecutively, starting at number 59. Commenters are requested to refer to these numbers in their submitted comments, which will assist the Board and members of the public that review comments online. Questions are presented by subject matter, reflecting the TILA provisions in the Bankruptcy Abuse Prevention and Consumer Protection Act of 2005 as follows:

Minimum Payment Disclosures

Should certain types of accounts and transactions be exempt from the disclosures? Q59–61

Hypothetical examples for periodic statements. Q62–64

What assumptions should be used in calculating the estimated repayment period? Q65

How should the minimum payment requirement and APR information be used in estimating the repayment period? Q66–75

What disclosures do consumers need about the assumptions made in estimating their repayment period? Q76

Option to provide the actual number of months to repay the outstanding balance. Q77–79

Are there alternative approaches the Board should consider? Q80–82

What guidance should the Board provide on making the minimum payment disclosures ''clear and conspicuous?'' Q83–84

Introductory Rate Disclosures. Q85–92

Internet Based Credit Card Solicitations. Q93–96

Disclosures Related to Payment Deadlines and Late Payment Penalties. Q97–101

Disclosures for Home-Secured Loans that May Exceed the Dwelling's Fair-Market Value. Q102–105

Prohibition on Terminating Accounts for Failure to Incur Finance Charges. Q106–108

II. Background

The Congress based the Truth in Lending Act (TILA) on findings that economic stability would be enhanced and competition among consumer credit providers would be strengthened by the informed use of credit, which results from consumers' awareness of the credit's cost. Accordingly, the stated purposes of the TILA are: (1) To provide a meaningful disclosure of credit terms to enable consumers to compare the various credit terms available in the marketplace more readily and avoid the uninformed use of credit; and (2) to protect consumers against inaccurate

and unfair credit billing and credit card practices. 15 U.S.C. 1601(a). TILA is implemented by the Board's Regulation Z. *12 CFR part 226.* An Official Staff Commentary interprets the requirements of Regulation Z. 12 CFR part 226 (Supp. I).

TILA mandates that the Board prescribe regulations to carry out the purposes of the act. 15 U.S.C. 1604(a). In promulgating rules to implement TILA, the Board is also authorized, among other things, to do the following:

- Issue regulations that contain such classifications, differentiations, or other provisions, or provide for such adjustments and exceptions for any class of transactions, that in the Board's judgment are necessary or proper to effectuate the purposes of TILA, facilitate compliance with the act, or prevent circumvention or evasion. 15 U.S.C. 1604(a), and;
- Exempt from all or part of TILA any class of transactions if the Board determines that TILA coverage does not provide a meaningful benefit to consumers in the form of useful information or protection. The Board must consider factors identified in the act and publish its rationale at the time a proposed exemption is published for comment. 15 U.S.C. 1604(f).

The Board periodically reviews its regulations to update them, if necessary. In December 2004, the Board initiated a review of Regulation Z by issuing an advanced notice of proposed rulemaking (ANPR). 69 FR 70925, Dec. 8, 2004. The ANPR sought public comment on a variety of specific issues relating to three broad categories: the format of open-end credit disclosures, the content of disclosures, and the substantive protections provided under the regulation. The ANPR solicited comment on the scope of the Board's review, and also requested commenters to identify other issues that the Board should address in the review. The ANPR contained a series of questions designed to elicit commenters' views on the types of changes the Board should consider. The comment period closed on March 28, 2005.

The Board received over 200 comment letters in response to the December 2004 ANPR. More than half of the comments were from individual consumers. About 60 comments were received from the industry or industry representatives, and about 20 comments were received from consumer advocates and community development groups. The Office of the Comptroller of the Currency, one state agency, and one member of Congress also submitted comments. Staff is continuing to analyze the comment letters.

On April 20, 2005, President Bush signed into law S. 256, the Bankruptcy Abuse Prevention and Consumer Protection Act of 2005 (the ''Bankruptcy Act''). Public Law 109–8, 119 Stat. 23. Although the new law primarily amends the bankruptcy code, it also contains several provisions amending TILA. The TILA amendments principally deal with open-end (revolving) credit accounts and require new disclosures on periodic statements and on credit card applications and solicitations. The new TILA provisions are as follows:

Minimum payment warnings. For open-end accounts, creditors must provide on each periodic statement a standardized warning about the effect of making only minimum payments, including:

- An example of how long it would take to pay off a specified balance, and
- A toll-free telephone number that consumers can use to obtain an estimate of how long it will take to pay off their own balance if only minimum payments are made.

The Board must develop a table that creditors can use in responding to consumers requesting such estimates. The Board and the Federal Trade Commission (FTC) must also establish their own toll-free telephone numbers for use by customers of small banks and non-depository institution creditors, respectively.

Introductory rate offers. A card issuer offering discounted introductory rates must disclose clearly and conspicuously on the application or solicitation the expiration date of the offer, the rate that will apply after that date, and an explanation of how the introductory rate could be lost (*e.g.*, by making a late payment).

Internet solicitations. Credit card offers on the Internet must include the same disclosure table (commonly known as the ''Schumer box'') that is currently required for applications or solicitations sent by direct mail.

Late fees. For open-end accounts, creditors must disclose on each periodic statement the earliest date on which a late payment fee may be charged, as well as the amount of the fee.

High loan-to-value mortgage credit. For home-secured credit that may exceed the dwelling's fair-market value, creditors must provide additional disclosures at the time of application and in advertisements (for both open-end and closed-end credit). The disclosures would warn consumers that interest on the portion of the loan that exceeds the home's fair-market value is not tax deductible.

Account termination. Creditors are prohibited from terminating an open-end account before its expiration date solely because the consumer has not incurred finance charges on the account.

III. Implementing the New TILA Provisions as Part of the Regulation Z Review

The Bankruptcy Act requires the Board to issue regulations implementing the amendments to TILA. The Board plans to implement these provisions as part of the Board's ongoing review of Regulation Z's open-end credit rules. Accordingly, the Board is publishing this second ANPR to reopen and extend the public comment period to obtain comments on implementing the Bankruptcy Act's amendments to TILA.

The Bankruptcy Act does not mandate when the new disclosures (including the Board's minimum payment table and toll-free number) must be implemented. The new TILA disclosure requirements will not take effect until at least 12 months after the Board issues final regulations adopting the changes. Even though there is no statutory deadline for issuing final rules to implement the new open-end disclosures, for disclosures concerning minimum payments and introductory rates, a separate provision of the Bankruptcy Act states that the Board should issue model forms and providing guidance on the ''clear and conspicuous'' standard within six months of the enactment of the Act (October 20, 2005). The issuance of model forms and clear and conspicuous standards within six months would have no effect, however, until final rules implementing the minimum payment and introductory rate disclosures are issued and become effective.

As a practical matter, issuing model forms and clear and conspicuous guidance for disclosures concerning minimum payments and introductory rates would require development of the substantive rules for the underlying disclosures at the same time. But the six-month period provides little time to develop and seek public comment on the underlying substantive disclosures that are subject to the guidance, and precludes effective consumer testing of the proposed new disclosures.

Implementing the Bankruptcy Act amendments as part of the broader Regulation Z review permits the new disclosures for minimum payments and introductory rates to be developed in the context of other changes that might be made both to the content and the format of the current open-end disclosures. A primary goal of the Regulation Z review is to improve the

effectiveness and usefulness of TILA's open-end credit disclosures. One factor to be considered in the review is how the content of disclosures might be simplified to address concerns about so-called ''information overload.'' The review also will study alternatives for improving the format of disclosures, including revising the model forms and clauses published by the Board. The Board has stated its intention to use consumer testing and focus groups to test the effectiveness of any proposed revisions.

By incorporating the Bankruptcy Act amendments into the Regulation Z review, the Board can coordinate the changes and make all changes to the periodic statement disclosures at one time. The same would be true for the credit card solicitation disclosures. If the Board separately implemented the Bankruptcy Act amendments before completing the Regulation Z review, subsequent changes to the TILA disclosures made during the broader review might necessitate reexamination of the rules implementing the Bankruptcy Act. Combining the two rulemakings mitigates that risk.

Moreover, a substantial burden would be imposed on creditors if they were required to implement changes twice—once to implement the Bankruptcy Act amendments for minimum payments and introductory rates, and a second time to implement changes made as part of Regulation Z review. Implementing the Bankruptcy Act amendments as part of the overall review of Regulation Z should involve less regulatory burden by allowing creditors to adopt all the necessary changes to their systems at one time. The views of members of the Board's Consumer Advisory Council were solicited at their June 2005 meeting, and there was general consensus among the Council members supporting this approach.

Accordingly, the Board has decided to use an integrated approach that will develop both the underlying disclosures and the clear and conspicuous guidance at the same time, with the assistance of consumer testing, as part of the ongoing Regulation Z review. A clear and conspicuous standard currently exists in Regulation Z, and this is the standard that will apply to all TILA disclosures, including the Bankruptcy Act amendments, until a new standard is adopted after notice and comment is sought in connection with the Regulation Z review. *See* 12 CFR 226.5(a)(1); comment 5(a)(1)–1.

IV. Request for Comment on Implementing the TILA Amendments

The Board is requesting public comment on implementation of the Bankruptcy Act's amendments to TILA, as discussed below.

A. Minimum Payment Disclosures

The Bankruptcy Act amends Section 127(b) of TILA to require creditors that extend open-end credit to provide a disclosure on the front of each periodic statement in a prominent location about the effects of making only minimum payments. This disclosure includes: (1) A ''warning'' statement indicating that making only the minimum payment will increase the interest the consumer pays and the time it takes to repay the consumer's balance; (2) a hypothetical example of how long it would take to pay off a specified balance if only minimum payments are made; and (3) a toll-free telephone number that the consumer may call to obtain an estimate of the time it would take to repay their actual account balance.

Under the Bankruptcy Act, depository institutions may establish and maintain their own toll-free telephone numbers or use a third party. In order to standardize the information provided to consumers through the toll-free telephone numbers, the Bankruptcy Act directs the Board to prepare a ''table'' illustrating the approximate number of months it would take to repay an outstanding balance if the consumer pays only the required minimum monthly payments and if no other advances are made. The Board is directed to create the table by assuming a significant number of different annual percentage rates, account balances, and minimum payment amounts; instructional guidance must be provided on how the information contained in the table should be used to respond to consumers' requests. The Board is also required to establish and maintain, for two years, a toll-free number for use by customers of depository institutions having assets of $250 million or less. The FTC must maintain a toll-free telephone number for creditors other than depository institutions.

The Bankruptcy Act provides that consumers who call the toll-free telephone number may be connected to an automated device through which they can obtain repayment information by providing information using a touch-tone telephone or similar device, but consumers who are unable to use the automated device must have the opportunity to be connected to an individual from whom the repayment information may be obtained. Creditors may not use the toll-free telephone number to provide consumers with information other than the repayment information set forth in the ''table'' issued by the Board.

Alternatively, a creditor may use a toll-free telephone number to provide the actual number of months that it will take consumers to repay their outstanding balance instead of providing an estimate based on the Board-created table. A creditor that does so, need not include a hypothetical example on their periodic statements; their toll-free number must be disclosed on the periodic statement but it need not be located on the front.

Should Certain Types of Accounts or Transactions Be Exempt From the Disclosures?

Under the Bankruptcy Act, minimum payment disclosures are required for all open-end accounts (such as credit card accounts, home-equity lines of credit, and general-purpose credit lines). The Act expressly states that these disclosure requirements do not apply, however, to any ''charge card'' account, the primary purpose of which is to require payment of charges in full each month. As discussed above, the Board has broad authority to provide exceptions from TILA's requirements. *See* 15 U.S.C. 1604(a), (f). Accordingly, the Board requests comment on whether certain open-end accounts should be exempt from some or all of the minimum payment disclosure requirements, as discussed below.

Much of the debate in Congress about the minimum payment disclosures focused on credit card accounts. For example, Senator Grassley, a primary sponsor of the Bankruptcy Act, in discussing the minimum payment disclosures, stated:

> [The Bankruptcy Act] contains significant new disclosures for consumers, mandating that credit card companies provide key information about how much [consumers] owe and how long it will take to pay off their credit card debts by only making the minimum payment. That is very important consumer education for every one of us.
>
> Consumers will also be given a toll-free number to call where they can get information about how long it will take to pay off their own credit card balances if they only pay the minimum payment. This will educate consumers and improve consumers' understanding of what their financial situation is.

Remarks of Senator Grassley (2005), *Congressional Record* (daily edition), vol. 151, March 1, p. S 1856.

Thus, it appears the principal concern was that consumers may not be fully aware of how long it takes to pay off their credit card accounts if only minimum monthly payments are made.

This differs from an installment loan where borrowers are required by the contract to repay the entire outstanding balance in a specified period. This concern may not exist for certain types of open-end credit accounts. For some open-end accounts, the length of time to repay the outstanding balance is fixed and expressed in the credit agreement. For example, some home-equity lines of credit (HELOCs) have a defined draw period and defined repayment period for amortizing the outstanding balance; the date of the final payment would be disclosed at account opening.

Reverse mortgages are another form of open-end credit where minimum payment disclosures may not be appropriate. Reverse mortgages are designed to allow consumers to convert the equity in their homes into cash; during an extended ''draw'' period consumers continue living in their homes, sometimes for an indefinite period, without making payments. The principal and interest become due upon certain events, such as when the homeowner moves, sells the home, or dies, or at the end of a selected loan term. Where payment dates are unknown, it does not appear that an estimate of the time to pay off the account could be provided.

Q59: Are there certain types of transactions or accounts for which the minimum payment disclosures are not appropriate? For example, should the Board consider a complete exemption from the minimum payment disclosures for open-end accounts or extensions of credit under an open-end plan if there is a fixed repayment period, such as with certain types of HELOCs? Alternatively, for these products, should the Board provide an exemption from disclosing the hypothetical example and the toll-free telephone number on periodic statements, but still require a standardized warning indicating that making only the minimum payment will increase the interest the consumer pays?

Q60: Should the Board consider an exemption that would permit creditors to omit the minimum payment disclosures from periodic statements for certain accountholders, regardless of the type of account; for example, an exemption for consumers who typically (1) do not revolve balances; or (2) make monthly payments that regularly exceed the minimum?

Q61: Some credit unions and retailers offer open-end credit plans that also allow extensions of credit that are structured like closed-end loans with fixed repayment periods and payments amounts, such as loans to finance the purchase of motor vehicles or other ''big-ticket items.'' How should the minimum payment disclosures be implemented for such credit plans?

Hypothetical Examples for Periodic Statements

Under the Bankruptcy Act, the hypothetical example that creditors must disclose on periodic statements varies depending on the creditor's minimum payment requirement. Generally, creditors that require minimum payments equal to 4 percent or less of the account balance must disclose on each statement that it takes 88 months to pay off a $1000 balance at an interest rate of 17 percent if the consumer makes a ''typical'' 2 percent minimum monthly payment. Creditors that require minimum payments exceeding 4 percent of the account balance must disclose that it takes 24 months to pay off a balance of $300 at an interest rate of 17 percent if the consumer makes a ''typical'' 5 percent minimum monthly payment (but the creditor may opt instead to disclose the statutory example for making 2 percent minimum payments). The example of a 5 percent minimum payment must be disclosed by creditors that are subject to FTC enforcement with respect to TILA, regardless of the creditor's actual minimum payment requirement. Creditors also have the option to substitute an example based on an APR that is greater than 17 percent.

Q62: The Bankruptcy Act authorizes the Board to periodically adjust the APR used in the hypothetical example and to recalculate the repayment period accordingly. Currently, the repayment periods for the statutory examples are based on a 17 percent APR. Nonetheless, according to data collected by the Board, the average APR charged by commercial banks on credit card plans in May 2005 was 12.76 percent. If only accounts that were assessed interest are considered, the average APR rises to 14.81 percent. *See* Board of Governors of the Federal Reserve Board, *Statistical Release G. 19*, (July 2005). Should the Board adjust the 17 percent APR used in the statutory example? If so, what criteria should the Board use in making the adjustment?

Q63: The hypothetical examples in the Bankruptcy Act may be more appropriate for credit card accounts than other types of open-end credit accounts. Should the Board consider revising the account balance, APR, or ''typical'' minimum payment percentage used in examples for open-end accounts other than credit cards accounts, such as HELOCs and other types of credit lines? If revisions were made, what account balance, APR, and ''typical'' minimum payment percentage should be used?

Q64: The statutory examples refer to the stated minimum payment percentages of 2 percent or 5 percent, as being ''typical.'' The term ''typical'' could convey to some consumers that the percentage used is merely an example, and is not based on the consumer's actual account terms. But the term ''typical'' might be perceived by other consumers as indicting that the stated percentage is an industry norm that they should use to compare the terms of their account to other accounts. Should the hypothetical example refer to the minimum payment percentage as ''typical,'' and if not, how should the disclosure convey to consumers that the example does not represent their actual account terms?

What Assumptions Should Be Used in Calculating the Estimated Repayment Period?

The Bankruptcy Act requires open-end creditors to provide a toll-free telephone number on periodic statements that consumers can use to obtain an estimate of the time it will take to repay the consumer's outstanding balance, assuming the consumer makes only minimum payments on the account and the consumer does not make any more draws on the line. The Act requires creditors to provide estimates that are based on tables created by the Board that estimate repayment periods for different outstanding balances, payment amounts, and interest rates. The Board plans to develop formulas that can be used to generate the required tables. The formulas also can be used by creditors, the FTC, and the Board to calculate the repayment period for a particular account; the use of a formula instead of a table facilitates the use of automated systems to provide the required disclosures. Copies of the tables that can be generated using the repayment calculation formulas would also be made available by the Board upon request.

In establishing formulas and tables that estimate repayment periods, the Act directs the Board to assume a significant number of different APRs, account balances, and minimum payment amounts. A number of other assumptions can also affect the calculation of a repayment period. For example, the hypothetical examples that must be disclosed on periodic statements incorporate the following assumptions, in addition to the statutory assumptions listed above:

1. *Balance Calculation Method.* The previous-balance method is used; finance charges are based on the beginning balance for the cycle.

2. *Grace Period.* No grace period applies to any portion of the balance.

3. *Residual Finance Charge.* When the account balance becomes less than the required minimum payment, the receipt of the final amount in full completely pays off the account. In other words, there is no residual finance charge that accrues in the month when the final bill is paid in full.

4. *Interest Rate and Outstanding Balance.* There is a single periodic rate (17%) applied to a single balance.

5. *Minimum Payment Amount.* The minimum payment requirement in the $1,000 balance example is assumed to be 2 percent of the outstanding balance or $20, whichever is greater. For the $300 balance example, the minimum payment requirement is assumed to be 5 percent of the outstanding balance or $15, whichever is greater.

In developing a formula for calculating a consumer's estimated repayment period, the Board could use some of the same assumptions that were used in creating the statute's hypothetical examples.

Balance Calculation Method. The statutory examples use a previous-balance method which calculates the finance charge based on the entire account balance as of the first day in the billing cycle. The average daily balance method is more commonly used by creditors; however, that method requires additional assumptions. For example, an assumption would need to be made about the length of each billing cycle, and the date during each cycle that a consumer's payment is made. The Board does not have data on when consumers typically make their payments each month. In using the previous-balance method, the estimated repayment periods are similar to those that would result from using the average daily balance method, assuming that all months are of equal length and that payments are credited on the last day of the billing cycle.

Grace Period. The required disclosures about the effect of making minimum payments are based on the assumption that the consumer will be ''revolving'' or carrying a balance. Thus, it seems reasonable to assume that the account is already in a revolving condition at the time the consumer calls to obtain the estimate, and that no grace period applies.

Residual Interest. When the consumer's account balance at the end of a billing cycle is less than the required minimum payment, the statutory examples assume that no additional transactions occurred after the end of the billing cycle, that the account balance will be paid in full, and that no additional finance charges will be applied to the account between the date the statement was issued and the date of the final payment. This assumption is necessary to have a finite solution to the repayment period calculation. Without this assumption, the repayment period could be infinite.

Q65. In developing the formulas used to estimate repayment periods, should the Board use the three assumptions stated above concerning the balance calculation method, grace period, and residual interest? If not, what assumptions should be used, and why?

How Should the Minimum Payment Requirement and APR Information Be Used in Estimating the Repayment Period?

The Bankruptcy Act directs the Board in estimating repayment periods to allow for a significant number of different outstanding balances, minimum payment amounts, and interest rates. These variables could have a significant impact on the repayment period. With respect to the toll-free numbers set up by the Board and the FTC, information about the consumers' account terms must come from consumers because the information is not available to the Board or the FTC. Consumers would need easy access to this information to request an estimated repayment period. Because consumers' outstanding account balances appear on their monthly statements, consumers can provide that amount when requesting an estimate of the repayment period. Issues arise, however, with respect to the minimum payment requirement and interest rate information.

Periodic statements do not disclose the fixed percentage or formula used to determine the minimum dollar amount that must be paid each month. The statements only disclose the minimum dollar amount that must be paid for the current statement period, which would vary each month as the account balance declines. Furthermore, while periodic statements must disclose all APRs applicable to the account, the statements may, but do not necessarily, indicate the portion of the account balance subject to each APR. This information is also needed to estimate the repayment period.

Below, the Board seeks commenters' views regarding three basic approaches for developing a system to calculate estimated repayment periods for consumers who call the toll-free telephone number. The three approaches discussed are:

(1) Prompting consumers to provide an account balance, a minimum payment amount, and APRs in order to obtain an estimated repayment period. For information about minimum payments and APRs that is not currently disclosed on periodic statements, the Board could require additional disclosures on those statements. But the Board also could develop a formula that makes assumptions about these variables for a ''typical'' account.

(2) Prompting consumers to input information, or using assumptions based on a ''typical'' account to calculate an estimated repayment period—but also giving creditors the option to input information from their own systems regarding consumers' account terms, to provide more accurate estimates. Estimates provided by creditors that elect this option would differ somewhat from the estimates provided by other creditors, the Board, and the FTC.

(3) Prompting consumers to provide their account balance, but requiring creditors to input information from their own systems regarding the account's minimum payment requirement and the portion of the balance subject to each APR. These estimates would be more accurate, but would impose additional compliance burdens, and would not necessarily reflect consumers' actual repayment periods because of the use of several other assumptions.

Minimum Payment Amount. The Board solicits comment on how the creditor's minimum payment requirement should be factored into the formula used to calculate repayment periods. Most creditors calculate the minimum payment each month based on a formula. Although minimum payment formulas typically calculate the payment as a percentage of the outstanding balance, the exact formulas that creditors use can vary among creditors and accounts. Some credit card issuers may calculate the minimum payment amount as a percentage of the outstanding balance; others may calculate the minimum payment as a percentage of the outstanding balance plus any finance charges, late fees, or other fees. Some creditors may use minimum payment formulas that vary based on the APR; for example, higher minimum payment percentages might apply to accounts with higher APRs. Open-end credit plans with multiple credit features may apply different minimum payment formulas to different account features. For HELOCs, the minimum payment formula used during the draw period may differ from the formula used during the repayment period.

Although the dollar amount of the minimum payment due for the month is disclosed on periodic statements, the

formula used by the creditor to calculate this amount currently is not included on the periodic statement. Even if the creditor's minimum payment formula were disclosed on periodic statements, the formula might be sufficiently complex that it would not be reasonable to expect this information to be used by consumers in using the toll-free telephone system.

The Board seeks comment on alternative approaches to address how minimum payment requirements should be factored into the formula used to estimate repayment periods. As discussed above, most minimum payment formulas, at least in part, calculate the minimum payment as a percentage of the outstanding balance. As the outstanding balance declines each month, the minimum payment amount declines until it reaches a certain floor amount (such as $20). Using the dollar amount of the minimum payment for a particular billing cycle would overstate the minimum payment amount in the succeeding months when the account balance declines and, therefore, would underestimate the consumer's repayment period. The potential error produced by using the current month's minimum payment amount would be compounded if that amount also includes fees assessed in the current cycle, such as late payment fees or over-the-credit-limit fees which, according to the statutory assumptions, will not be recurring each month.

One alternative is for the Board to select a ''typical'' minimum payment formula for particular types of open-end accounts (*e.g.*, general-purpose credit cards, retail credit cards, HELOCs, and other lines of credit), and use ''typical'' formulas for calculating the repayment estimates. For example, although there is no absolute industry standard for minimum payments for general-purpose credit cards, in recent months several major credit card issuers have moved toward using similar minimum payment formulas. These minimum payment formulas generally prevent prolonged negative amortization for customers who keep their payments current and are under the credit limit by requiring minimum payments never be less than all finance charges plus one percent of the outstanding balance. These creditors have different ways of treating late fees and over-the-credit limit fees, but generally the formulas are designed to prevent prolonged negative amortization either by including the fees in the minimum payment or capping the fees. The Board could use some variation of these minimum payment formulas, as an approximation of the minimum payment formulas that apply to general-purpose credit cards.

Unlike the Board and the FTC which must use consumer-input systems, a creditor that establishes its own toll-free telephone number could estimate repayment periods based on information in the creditor's database, including the creditor's minimum payment formula. A system based on the creditor's information might be easier for consumers to use and give them more accurate estimates. Accordingly, the Board could grant creditors the flexibility to either (1) use the same assumptions about minimum payment formulas and interest rates as the Board and FTC, or (2) use the creditor's actual minimum payment formula and interest rates to calculate the repayment estimate. One consequence of giving the creditor an option in this regard would be that consumers with identical account terms and balances could obtain different repayment estimates depending on whether the estimate was prepared using the Board's assumptions or the actual account terms. Alternatively, the Board could require all creditors to use their actual minimum payment formulas and interest rates to calculate the repayment estimate. But the Board and FTC would still be providing estimates using the Board's assumptions.

Q66: Comment is specifically solicited on whether the Board should select ''typical'' minimum payment formulas for various types of accounts. If so, how should the Board determine the formula for each type of account? Are there other approaches the Board should consider?

Q67: If the Board selects a ''typical'' minimum payment formula for general-purpose credit cards, would it be appropriate to assume the minimum payment is based on one percent of the outstanding balance plus finance charges? What are typical minimum payment formulas for open-end products other than general-purpose credit cards (such as retail credit cards, HELOCs, and other lines of credit)?

Q68: Should creditors have the option of programming their systems to calculate the estimated repayment period using the creditor's actual payment formula in lieu of a ''typical'' minimum payment formula assumed by the Board? Should creditors be required to do so? What would be the additional cost of compliance for creditors if they must use their actual minimum payment formula? Would the cost be outweighed by the benefit in improving the accuracy of the repayment estimates?

Q69: Negative amortization can occur if the required minimum payment is less than the total finance charges and other fees imposed during the billing cycle. As discussed above, several major credit card issuers have moved toward minimum payment requirements that prevent prolonged negative amortization. But some creditors may use a minimum payment formula that allows negative amortization (such as by requiring a payment of 2% of the outstanding balance, regardless of the finance charges or fees incurred). Should the Board use a formula for calculating repayment periods that assumes a ''typical'' minimum payment that does not result in negative amortization? If so, should the Board permit or require creditors to use a different formula to estimate the repayment period if the creditor's actual minimum payment requirement allows negative amortization? What guidance should the Board provide on how creditors disclose the repayment period in instances where negative amortization occurs?

APR information. The statute's hypothetical repayment examples assume that a single APR applies to a single account balance. But open-end credit accounts, particularly credit card accounts, can have multiple APRs. The APR may differ for purchases, cash advances, and balance transfers. A card issuer may have a promotional APR that applies to the initial balance transfer and a separate APR for other balance transfers. Although all the APRs for accounts are disclosed on periodic statements, calculating the repayment period requires information about what percentage or amount of the total ending balance is subject to each APR. 15 U.S.C. 1637(b)(5); 12 CFR 226.7(d). Currently, the total ending balance is required to be disclosed, but not the portion of the cycle's ending balance that is subject to each APR. 15 U.S.C. 1637(b)(8); 12 CFR 226.7(i). (Some creditors may voluntarily disclose such information on periodic statements.) For example, assuming a $1,000 outstanding balance on an account with a 12 percent APR for purchases and a 19.5 percent APR on cash advances, the consumer will know from his or her periodic statement the amount of the total outstanding balance ($1,000), but may not know the percentage or amount of the ending balance subject to the 12 percent rate and the ending balance subject to the 19.5 percent rate. Creditors know the portion of the cycle's ending balance that is subject to each APR, and could develop automated systems that incorporate this

information as part of their calculation. But again, the toll-free telephone systems developed by the Board and FTC would have to depend solely on data provided by the consumer.

If multiple APRs apply to the outstanding balance, using the lowest APR to calculate the repayment period would estimate repayment periods that are consistently too short; using the highest APR would estimate repayment periods that are consistently too long. How much the repayment periods are underestimated or overestimated in each of these cases would depend on how the outstanding balance is distributed among the multiple rates. Using an average of the multiple rates may either overestimate or underestimate the repayment period depending on how the outstanding balance is distributed among the rates. It is unclear whether detailed transaction data about how consumers use their credit card accounts would support a finding that there is a ''typical'' approach that would provide the best estimate of the repayment periods in most cases.

Q70: What proportion of credit card accounts accrue finance charges at more than one periodic rate? Are account balances typically distributed in a particular manner, for example, with the greater proportion of the balance accruing finance charges at the higher rate or the lower rate?

More precise repayment periods could be calculated if balances subject to different rates are treated separately. This raises practical issues if consumers must provide information about the multiple rates and the balances subject to each rate. Periodic statements would need to disclose the portion of the outstanding balance to which each APR applies. Although creditors commonly disclose an average daily balance for each periodic rate applied in a billing cycle, in many cases, the average daily balances applicable to the rates may not be good approximations of the portion of the ending balances applicable to the rates. The Board solicits comments on the best approach for applying APR information to estimate the repayment period.

Q71: The statute's hypothetical examples assume that a single APR applies to a single balance. For accounts that have multiple APRs, would it be appropriate to calculate an estimated repayment period using a single APR? If so, which APR for the account should be used in calculating the estimate?

Q72. Instead of using a single APR, should the Board adopt a formula that uses multiple APRs but incorporates assumptions about how those APRs should be weighted? Should consumers receive an estimated repayment period using the assumption that the lowest APR applies to the entire balance and a second estimate based on application of the highest APR; this would provide consumers with a range for the estimated repayment period instead of a single answer. Are there other ways to account for multiple APRs in estimating the repayment period?

Q73: One approach to considering multiple APRs could be to require creditors to disclose on periodic statements the portion of the ending balance that is subject to each APR for the account. Consumers could provide this information when using the toll-free telephone number to request an estimated repayment period that incorporates all the APRs that apply. What would be the additional compliance cost for creditors if, in connection with implementing the minimum payment disclosures, creditors were required to disclose on periodic statements the portion of the ending balance subject to each APR for the account?

Q74: As an alternative to disclosing more complete APR information on periodic statements, creditors could program their systems to calculate a consumer's repayment period based on the APRs applicable to the consumer's account balance. Should this be an option or should creditors be required to do so? What would be the additional cost of compliance for creditors if this was required? Would the cost be outweighed by the benefit in improving the accuracy of the repayment estimates?

Q75: If multiple APRs are used, assumptions must be made about how consumers' payments are allocated to different balances. Should it be assumed for purposes of the toll-free telephone number that payments always are allocated first to the balance carrying the lowest APR?

What Disclosures Do Consumers Need About the Assumptions Made in Estimating Their Repayment Period?

Consumers may need to be aware of some of the assumptions underlying the estimate of their repayment period to properly comprehend the significance of the estimate. Accordingly, certain assumptions may need to be disclosed. For example, consumers might be informed that the estimated repayment period is based on the assumption that there will be no new transactions, no late payments, no changes in the APRs, and that only minimum payments are made. Consumers might also need to be aware of any assumptions about the creditor's minimum payment requirement.

Q76: What key assumptions, if any, should be disclosed to consumers in connection with the estimated repayment period? When and how should these key assumptions be disclosed? Should some or all of these assumptions be disclosed on the periodic statement or should they be provided orally when the consumer uses the toll-free telephone number? Should the Board issue model clauses for these disclosures?

Option To Provide the Actual Number of Months To Repay the Outstanding Balance

The Bankruptcy Act allows creditors to forego using the toll-free number to provide an estimated repayment period if the creditor instead provides through the toll-free number the ''actual number of months'' to repay the consumer's account.

Q77: What standards should be used in determining whether a creditor has accurately provided the ''actual number of months'' to repay the outstanding balance? Should the Board consider any safe harbors? For example, should the Board deem that a creditor has provided an ''actual'' repayment period if the creditor's calculation is based on certain account terms identified by the Board (such as the actual balance calculation method, payment allocation method, all applicable APRs, and the creditor's actual minimum payment formula)? With respect to other terms that affect the repayment calculation, should creditors be permitted to use the assumptions specified by the Board, even if those assumptions do not match the terms on the consumer's account?

Q78: Should the Board adopt a tolerance for error in disclosing the actual repayment periods? If so, what should the tolerance be?

Q79: Is information about the ''actual number of months'' to repay readily available to creditors based on current accounting systems, or would new systems need to be developed? What would be the costs of developing new systems to provide the ''actual number of months'' to repay?

Are There Alternative Approaches the Board Should Consider?

Above, the Board solicits comments on three approaches for disclosing estimated repayment periods if only minimum payments are made. In developing a system, the Board will consider the complexity of each approach and the resulting compliance burden, as well as the accuracy and

usefulness of the estimates that would be produced.

Q80: Are there alternative frameworks to the three approaches discussed above that the Board should consider in developing the repayment calculation formula? If suggesting alternative frameworks, please be specific. Given the variety of account structures, what calculation formula should the Board use in implementing the toll-free telephone system?

Q81: Are any creditors currently offering Web-based calculation tools that permit consumers to obtain estimates of repayment periods? If so, how are these calculation tools typically structured; what information is typically requested from consumers, and what assumptions are made in estimating the repayment period?

Q82: Are there alternative ways the Board should consider for creditors to provide repayment periods other than through toll-free telephone numbers? For example, the Board could encourage creditors to disclose the repayment estimate or actual number of months to repay on the periodic statement; these creditors could be exempted from the requirement to maintain a toll-free telephone number. This would simplify the process for consumers and possibly for creditors as well. What difficulties would creditors have in disclosing the repayment estimate or actual repayment period on the periodic statement?

What Guidance Should the Board Provide on Making the Minimum Payment Disclosures ''Clear and Conspicuous?''

The Bankruptcy Act provides that the minimum payment disclosures must be on the front of the periodic statement in a prominent location, and must be clear and conspicuous. The Board is directed to issue model disclosures and to promulgate rules to provide guidance on the clear and conspicuous requirement. The Act requires the Board to consult with the other Federal banking agencies, the National Credit Union Administration, and the FTC. In promulgating clear and conspicuous regulations, the Board is directed to ensure that the required standard ''can be implemented in a manner that results in disclosures which are reasonably understandable and designed to call attention to the nature and significance of the information in the notice.''

Q83: What guidance should the Board provide on the location or format of the minimum payment disclosures? Is a minimum type size requirement appropriate?

Q84: What model forms or clauses should the Board consider?

B. Introductory Rate Disclosures

The Bankruptcy Act amends section 127(c) of TILA to require additional disclosures for credit card applications and solicitations sent by direct mail or provided over the Internet that offer a ''temporary'' APR. The Act defines a ''temporary'' APR as any credit card interest rate that applies ''for an introductory period of less than 1 year, if that rate is less than an APR that was in effect within 60 days before the date of mailing the application or solicitation.''

Currently, creditors offering a temporary APR may promote the introductory rate in their marketing materials, as long as the permanent rate is provided in the required disclosure table (commonly known as the ''Schumer box'') that is included on or with the solicitation. The Schumer box must contain any APR that may be applied to an outstanding balance. Although creditors are not required to include temporary introductory rates in the Schumer box, when a temporary rate is included, the expiration date must also appear in the box. If the initial APR may increase upon the occurrence of one or more specific events, such as a late payment, the issuer must disclose in the Schumer box both the initial rate and the increased penalty rate. The specific event or events that may trigger the penalty rate must be disclosed outside of the Schumer box, with an asterisk or other means to direct the consumer to this additional information. 15 U.S.C. 1637(c)(1)(A)(i); 12 CFR 226.5a(b)(1); comments 5a(b)(1)–5, –7.

The Bankruptcy Act requires credit card issuers to use the term ''introductory'' clearly and conspicuously in immediate proximity to *each* mention of the temporary APR in applications, solicitations, and all accompanying promotional materials. Credit card issuers also must disclose, in a prominent location closely proximate to the *first* mention of the introductory APR, the time period when the introductory APR expires and the APR that will apply after the introductory rate expires (popularly known as the ''go-to'' APR). If the go-to APR is a variable rate, then the disclosure must be based on an APR that was in effect within 60 days before the application or solicitation was mailed.

The Bankruptcy Act also requires credit card issuers to disclose clearly and conspicuously in offers with temporary APRs, a general description of the circumstances that may result in revocation of the introductory rate (other than expiration of the introductory period), and the APR that will apply if the introductory APR is revoked. For variable-rate programs, the disclosed APR must be one that was in effect within 60 days before the date of mailing the application or solicitation. These disclosures also must be located prominently on or with the application or solicitation.

Q85: The Bankruptcy Act requires the Board to issue model disclosures and rules that provide guidance on satisfying the clear and conspicuous requirement for introductory rate disclosures. The Board is directed to adopt standards that can be implemented in a manner that results in disclosures that are ''reasonably understandable and designed to call attention to the nature and significance of the information.'' What guidance should the Board provide on satisfying the clear and conspicuous requirement? Should the Board impose format requirements, such as a minimum font size? Are there other requirements the Board should consider? What model disclosures should the Board issue?

Q86: Credit card issuers must use the term ''introductory'' in immediate proximity to *each* mention of the introductory APR. What guidance, if any, should the Board provide in interpreting the ''immediate proximity'' requirement? Is it sufficient for the term ''introductory'' to immediately precede or follow the APR (such as ''Introductory APR 3.9%'' or ''3.9% APR introductory rate'')?

Q87: The expiration date and go-to APR must be closely proximate to the ''first mention'' of the temporary introductory APR. The introductory APR might, however, appear several times on the first page of a solicitation letter. What standards should the Board use to identify one APR in particular as the ''first mention'' (such as the APR using the largest font size, or the one located highest on the page)?

Q88: Direct-mail offers often include several documents sent in a single envelope. Should the Board seek to identify one document as the ''first mention'' of the temporary APR? Or should each document be considered a separate solicitation, so that all documents mentioning the introductory APR contain the required disclosures?

Q89: The expiration date for the temporary APR and the go-to APR also must be in a ''prominent location'' that is ''closely proximate'' to the temporary APR. What guidance, if any, should the Board provide on this requirement?

Q90: Some credit card issuers' offers list several possible permanent APRs, and consumer qualifications for any particular rate is subsequently

determined by information gathered as part of the application process. What guidance should the Board provide on how to disclose the ''go-to'' APR in the solicitation when the permanent APR is set using risk-based pricing? Should all the possible rates be listed, or should a range of rates be permissible, indicating the rate will be determined based on creditworthiness?

Q91: Regulation Z currently provides that if the initial APR may increase upon the occurrence of one or more specific events, such as a late payment, the issuer must disclose in the Schumer box both the initial rate and the increased penalty rate. The specific event or events that may trigger the penalty rate must be disclosed outside of the Schumer box, with an asterisk or other means used to direct the consumer to this additional information. The Bankruptcy Act requires that a general description of the circumstances that may result in revocation of the temporary rate must be disclosed ''in a prominent manner'' on the application or solicitation. What additional rules should be considered by the Board to ensure that creditors' disclosures comply with the Bankruptcy Act amendments? Is additional guidance needed on what constitutes a ''general description'' of the circumstances that may result in revocation of the temporary APR? If so, what should that guidance say?

Q92: The introductory rate disclosures required by the Bankruptcy Act apply to applications and solicitations whether sent by direct mail or provided electronically. To what extent should the guidance for applications and solicitations provided by direct mail differ from the guidance for those provided electronically?

C. Internet Based Credit Card Solicitations

The Bankruptcy Act further amends Section 127(c) of TILA to require that the same disclosures made for applications or solicitations sent by direct mail also be made for solicitations to open a credit card account using the Internet or other interactive computer service. A ''solicitation'' is an offer to open an account without requiring an application. 15 U.S.C. 1637(c); 12 CFR 226.5a(a)(1). The Act specifies that disclosures provided using the Internet must be ''readily accessible to consumers in close proximity to the solicitation,'' and also must be ''updated regularly to reflect the current policies, terms, and fee amounts.''

In June 2000, the Electronic Signatures in Global and National Commerce Act (E-Sign Act) became law. The E-Sign Act seeks to encourage the continued expansion of electronic commerce, and establishes the legal validity and enforceability of electronic signatures, contracts, and other records (including disclosures) in interstate and foreign commerce transactions. The E-Sign Act does not affect any requirement imposed by law or regulation, other than a requirement that documents or signatures be ''non-electronic'' or in paper form. The E-Sign Act also does not affect the content or timing of any consumer disclosure. The E-Sign Act became effective on October 1, 2000.

In March 2001, the Board issued interim final rules authorizing the use of electronic disclosures under Regulation Z, consistent with the requirements of the E-Sign Act. 66 FR 17329 (Mar. 30, 2001). The interim rules, which are not mandatory, also contained standards for the electronic delivery of disclosures, including the need to update periodically the disclosures made available on a creditor's Internet web site. For example, the interim rules stated that variable-rate disclosures made available at a credit card issuer's Internet web site should be based on an APR that was in effect within the last 30 days.

Q93: Although the Bankruptcy Act provisions concerning Internet offers refer to credit card solicitations (where no application is required), this may be interpreted to also include applications. Is there any reason for treating Internet applications differently than Internet solicitations?

Q94: What guidance should the Board provide on how solicitation (and application) disclosures may be made clearly and conspicuously using the Internet? What model disclosures, if any, should the Board provide?

Q95: What guidance should the Board provide regarding when disclosures are ''readily accessible to consumers in close proximity'' to a solicitation that is made on the Internet? The 2001 interim final rules stated that a consumer must be able to access the disclosures at the time the application or solicitation reply form is made available electronically. The interim rules provided flexibility in satisfying this requirement. For example, a card issuer could provide on the application (or reply form) a link to disclosures provided elsewhere, as long as consumers cannot bypass the disclosures before submitting the application or reply form. Alternatively, if a link to the disclosures was not used, the electronic application or reply form could clearly and conspicuously refer to the fact that rate, fee, and other cost information either precedes or follows the electronic application or reply form. Or the disclosures could automatically appear on the screen when the application or reply form appears. Is additional or different guidance needed from the guidance in the 2001 interim final rules?

Q96: What guidance should the Board provide regarding what it means for the disclosures to be ''updated regularly to reflect the current policies, terms, and fee amounts?'' Is the guidance in the 2001 interim rules, suggesting a 30-day standard, appropriate?

D. Disclosures Related to Payment Deadlines and Late Payment Penalties

Under the Bankruptcy Act, Section 127(b) of TILA is amended to require creditors offering open-end plans to provide additional disclosures on periodic statements if a late payment fee will be imposed for failure to make a payment on or before the required due date. The periodic statement must disclose clearly and conspicuously, the date on which the payment is due or, if different, the earliest date on which a late payment fee may be charged, as well as the amount of the late payment fee that may be imposed if payment is made after that date.

Q97: Under what circumstances, if any, would the ''date on which the payment is due'' be different from the ''earliest date on which a late payment fee may be charged?''

Q98: Is additional guidance needed on how these disclosures may be made in a clear and conspicuous manner on periodic statements? Should the Board consider particular format requirements, such as requiring the late payment fee to be disclosed in close proximity to the payment due date (or the earliest date on which a late payment fee may be charged, if different)? What model disclosures, if any, should the Board provide with respect to these disclosures?

Q99: The December 2004 ANPR requested comment on whether the Board should issue a rule requiring creditors to credit payments as of the date they are received, regardless of what time during the day they are received. Currently, under Regulation Z, creditors may establish reasonable cut-off hours; if the creditor receives a payment after that time (such as 2 pm), then the creditor is not required to credit the payment as of that date. If the Board continues to allow creditors to establish reasonable cut-off hours, should the cut-off hour be disclosed on each periodic statement in close proximity to the payment due date?

Q100: Failure to make a payment on or before the required due date

commonly triggers an increased APR in addition to a late payment fee. As a part of the Regulation Z review, should the Board consider requiring that any increased rate that would apply to outstanding balances accompany the late payment fee disclosure?

Q101: The late payment disclosure is required for all open-end credit products. Are there any special issues applicable to open-end accounts other than credit cards that the Board should consider?

E. Disclosures for Home-Secured Loans That May Exceed the Dwelling's Fair-Market Value

Under the Bankruptcy Act, creditors extending home-secured credit (both open-end and closed-end) must provide additional disclosures for home-secured loans that exceed or may exceed the fair-market value of the dwelling. Section 144 and 147(b) of TILA are amended to require that each advertisement relating to an extension of credit that may exceed the fair-market value of the dwelling must include a clear and conspicuous statement that: (1) The interest on the portion of the credit extension that is greater than the fair-market value of the dwelling is not tax deductible for Federal income tax purposes; and (2) the consumer should consult a tax adviser for further information about the deductibility of interest and charges. This requirement only applies to advertisements that are disseminated in paper form to the public or through the Internet, as opposed to radio or television.

In addition, Sections 127(A) and 128 of TILA are amended to require creditors extending home-secured credit to make the above disclosures at the time of application in cases where the extension of credit exceeds or may exceed the fair-market value of the dwelling. Currently, open-end creditors extending home-secured credit already are required to disclose at the time of application that the consumer should consult a tax adviser for further information about the deductibility of interest and charges. *See* 15 U.S.C. 1637a(a)(13); 12 CFR 226.5b(d)(11).

Q102: What guidance should the Board provide in interpreting when an ''extension of credit may exceed the fair-market value of the dwelling?'' For example, should the disclosures be required only when the new credit extension may exceed the dwelling's fair-market value, or should disclosures also be required if the new extension of credit combined with existing mortgages may exceed the dwelling's fair-market value?

Q103: In determining whether the debt ''may exceed'' a dwelling's fair-market value, should only the initial amount of the loan or credit line and the current property value be considered? Or should other circumstances be considered, such as the potential for a future increase in the total amount of the indebtedness when negative amortization is possible?

Q104: What guidance should the Board provide on how to make these disclosures clear and conspicuous? Should the Board provide model clauses or forms with respect to these disclosures?

Q105: With the exception of certain variable-rate disclosures (12 CFR 226.17(b) and 226.19(a)), disclosures for closed-end mortgage transactions generally are provided within three days of application for home-purchase loans and before consummation for all other home-secured loans. 15 U.S.C. 1638(b). Is additional compliance guidance needed for the Bankruptcy Act disclosures that must be provided at the time of application in connection with closed-end loans?

F. Prohibition on Terminating Accounts for Failure To Incur Finance Charges

The Bankruptcy Act amends Section 127 of TILA to prohibit an open-end creditor from terminating an account under an open-end consumer credit plan before its expiration date solely because the consumer has not incurred finance charges on the account. Under the Bankruptcy Act, this prohibition would not prevent a creditor from terminating an account for inactivity in three or more consecutive months.

Q106: What issues should the Board consider in providing guidance on when an account ''expires?'' For example, card issuers typically place an expiration date on the credit card. Should this date be considered the expiration date for the account?

Q107: The prohibition on terminating accounts for failure to incur finance charges applies to all open-end credit products. Are there any issues applicable to open-end accounts other than credit card accounts that the Board should consider?

Q108: The prohibition on terminating accounts does not prevent creditors from terminating an account for inactivity in three or more consecutive months (assuming the termination complies with other applicable laws and regulations, such as the rules in Regulation Z governing the termination of HELOCS, 12 CFR 226.5b(f)(2)). Should the Board provide guidance on this aspect of the statute, and what constitutes ''inactivity?''

By order of the Board of Governors of the Federal Reserve System, October 11, 2005.

Jennifer J. Johnson,

Secretary of the Board.

[FR Doc. 05–20664 Filed 10–14–05; 8:45 am]

BILLING CODE 6210–01–P

DEPARTMENT OF TRANSPORTATION

Federal Aviation Administration

14 CFR Part 39

[Docket No. FAA–2005–22696; Directorate Identifier 2004–SW–46–AD]

RIN 2120–AA64

Airworthiness Directives; Eurocopter France Model EC 155B and B1 Helicopters

AGENCY: Federal Aviation Administration, DOT.

ACTION: Notice of proposed rulemaking (NPRM).

SUMMARY: This document proposes adopting a new airworthiness directive (AD) for Eurocopter France (ECF) Model EC 155B and B1 helicopters. This proposal would require inspecting an electrical cable bundle for wear. If wear is present, the AD would require installing an airworthy cable bundle and modifying the routing of the electrical cable bundles. This proposal is prompted by reports of a short circuit in the wiring, which led to failure of the normal and emergency landing gear operation modes. The actions specified by this proposed AD are intended to prevent interference of the wiring with the structure resulting in an electrical short circuit, failure of the landing gear to extend, and an emergency landing.

DATES: Comments must be received on or before December 16, 2005.

ADDRESSES: Use one of the following addresses to submit comments on this proposed AD:

- DOT Docket Web Site: Go to *http://dms.dot.gov* and follow the instructions for sending your comments electronically;
- Government-Wide Rulemaking Web Site: Go to *http://www.regulations.gov* and follow the instructions for sending your comments electronically;
- Mail: Docket Management Facility; U.S. Department of Transportation, 400 Seventh Street, SW., Nassif Building, Room PL–401, Washington, DC 20590;
- Fax: 202–493–2251; or
- Hand Delivery: Room PL–401 on the plaza level of the Nassif Building, 400 Seventh Street, SW., Washington, DC, between 9 a.m. and 5 p.m., Monday through Friday, except Federal holidays.

You may get the service information identified in this proposed AD from American Eurocopter Corporation, 2701 Forum Drive, Grand Prairie, Texas 75053–4005, telephone (972) 641–3460, fax (972) 641–3527.

You may examine the comments to this proposed AD in the AD docket on the Internet at *http://dms.dot.gov*.

FOR FURTHER INFORMATION CONTACT: Jorge Castillo, Aviation Safety Engineer, FAA, Rotorcraft Directorate, Regulations and Policy Group, Fort Worth, Texas 76193–0111, telephone (817) 222–5127, fax (817) 222–5961.

SUPPLEMENTARY INFORMATION:

Comments Invited

We invite you to submit any written data, views, or arguments regarding this proposed AD. Send your comments to the address listed under the caption **ADDRESSES.** Include the docket number ''FAA–2005–22696, Directorate Identifier 2004–SW–46–AD'' at the beginning of your comments. We specifically invite comments on the overall regulatory, economic, environmental, and energy aspects of the proposed AD. We will consider all comments received by the closing date and may amend the proposed AD in light of those comments.

We will post all comments we receive, without change, to *http://dms.dot.gov*, including any personal information you provide. We will also post a report summarizing each substantive verbal contact with FAA personnel concerning this proposed rulemaking. Using the search function of our docket Web site, you can find and read the comments to any of our dockets, including the name of the individual who sent or signed the comment. You may review the DOT's complete Privacy Act Statement in the **Federal Register** published on April 11, 2000 (65 FR 19477–78), or you may visit *http://dms.dot.gov*.

Examining the Docket

You may examine the docket that contains the proposed AD, any comments, and other information in person at the Docket Management System (DMS) Docket Office between 9 a.m. and 5 p.m., Monday through Friday, except Federal holidays. The Docket Office (telephone 1–800–647–5227) is located at the plaza level of the Department of Transportation NASSIF Building in Room PL–401 at 400 Seventh Street, SW., Washington, DC. Comments will be available in the AD docket shortly after the DMS receives them.

Discussion

The Direction Generale de l'Aviation Civile (DGAC), the airworthiness authority for France, notified the FAA that an unsafe condition may exist on ECF Model EC 155 helicopters. The DGAC advises of the occurrence of a short circuit that occurred in the wiring of panel 12 Alpha making the landing gear inoperative.

ECF has issued Alert Service Bulletin No. 24A011 (ASB), dated March 11, 2004, and subsequently revised on May 14, 2004, which specifies checking the condition of the wiring and modifying its routing to preclude the risk of interference and associated damage. The May 14, 2004, revision to the ASB also specifies prevention of any interference of the wiring with the head of the vent line attaching clamp by replacing wiring kit 365A0739C28.71 with wiring kit 365A0739C28.72. The DGAC classified these ASBs as mandatory and issued AD No. F–2004–057 R1, dated July 21, 2004, to ensure the continued airworthiness of these helicopters in France.

These helicopter models are manufactured in France and are type certificated for operation in the United States under the provisions of 14 CFR 21.29 and the applicable bilateral agreement. Pursuant to the applicable bilateral agreement, the DGAC has kept us informed of the situation described above. We have examined the findings of the DGAC, reviewed all available information, and determined that AD action is necessary for products of this type design that are certificated for operation in the United States.

This previously described unsafe condition is likely to exist or develop on other helicopters of the same type designs registered in the United States. Therefore, the proposed AD would require the following:

- Within 50 hours time-in-service (TIS), inspect the wiring of panel 12 Alpha electrical (wiring) cable bundle for wear. If wear is present, replace the worn cable bundle with an airworthy cable bundle.
- Modify the routing of the electrical wiring (MOD 0739C28) and replace spreaders and spacers.

The actions would be required to be accomplished in accordance with specified portions of the ASB described previously.

We estimate that this proposed AD would affect 7 helicopters of U.S. registry and would take about 16 work hours to inspect and modify the wiring per helicopter at an average labor rate of $65 per work hour. Required parts and material would cost about $240. Based on these figures, we estimate the total cost impact of the proposed AD on U.S. operators to be $8,960, assuming that all of the helicopters will be modified.

Regulatory Findings

We have determined that this proposed AD would not have federalism implications under Executive Order 13132. Additionally, this proposed AD would not have a substantial direct effect on the States, on the relationship between the national Government and the States, or on the distribution of power and responsibilities among the various levels of government.

For the reasons discussed above, I certify that the proposed regulation:

1. Is not a ''significant regulatory action'' under Executive Order 12866;
2. Is not a ''significant rule'' under the DOT Regulatory Policies and Procedures (44 FR 11034, February 26, 1979); and
3. Will not have a significant economic impact, positive or negative, on a substantial number of small entities under the criteria of the Regulatory Flexibility Act.

We prepared a draft economic evaluation of the estimated costs to comply with this proposed AD. See the DMS to examine the draft economic evaluation.

Authority for This Rulemaking

Title 49 of the United States Code specifies the FAA's authority to issue rules on aviation safety. Subtitle I, section 106, describes the authority of the FAA Administrator. Subtitle VII, Aviation Programs, describes in more detail the scope of the Agency's authority.

We are issuing this rulemaking under the authority described in subtitle VII, part A, subpart III, section 44701, ''General requirements.'' Under that section, Congress charges the FAA with promoting safe flight of civil aircraft in air commerce by prescribing regulations for practices, methods, and procedures the Administrator finds necessary for safety in air commerce. This regulation is within the scope of that authority because it addresses an unsafe condition that is likely to exist or develop on products identified in this rulemaking action.

List of Subjects in 14 CFR Part 39

Air transportation, Aircraft, Aviation safety, Safety.

The Proposed Amendment

Accordingly, pursuant to the authority delegated to me by the Administrator, the Federal Aviation Administration proposes to amend part 39 of the Federal Aviation Regulations (14 CFR part 39) as follows:

PART 39—AIRWORTHINESS DIRECTIVES

1. The authority citation for part 39 continues to read as follows:

Authority: 49 U.S.C. 106(g), 40113, 44701.

§ 39.13 [Amended]

2. Section 39.13 is amended by adding a new airworthiness directive to read as follows:

Eurocopter France: Docket No. FAA–2005–22696; Directorate Identifier 2004–SW–46–AD.

Applicability: Model EC 155B and B1 helicopters, certificated in any category.

Compliance: Required as indicated, unless accomplished previously.

To prevent interference of the wiring with the structure resulting in an electrical short circuit, failure of the landing gear to extend, and an emergency landing, accomplish the following:

(a) Within 50 hours time-in-service (TIS),

(1) Inspect the wiring of panel 12 Alpha (wiring) electrical cable bundle for wear. If wear is present, replace the worn cable bundle with an airworthy cable bundle by following the Accomplishment Instructions, paragraphs 2.A.1, 2.B.1, and 2.B.2 of Eurocopter Alert Service Bulletin EC155, Revision 1, dated May 14, 2004 (ASB).

Note 1: Aircraft Maintenance Manual (AMM): Tasks 24.00.00.911 and 32–30–00–721 and Standard Practices Manual (MTC) Work Cards 20.02.01.415, 20.06.01.310, 20.06.01.406, and 20.02.06.409 pertain to the subject of this AD.

(2) Modify the routing of the electrical wiring (MOD 0739C28) and replace spreaders and spacers by following the Accomplishment Instructions, paragraph 2.B.3. through 2.B.9. of the ASB.

(b) To request a different method of compliance or a different compliance time for this AD, follow the procedures in 14 CFR 39.19. Contact the Safety Management Group, FAA, for information about previously approved alternative methods of compliance.

(c) Special flight permits will not be issued.

Note 2: The subject of this AD is addressed in Direction Generale de l'Aviation Civile (France) AD F–2004–057 R1, dated July 21, 2004.

Issued in Fort Worth, Texas, on October 7, 2005.

David A. Downey,

Manager, Rotorcraft Directorate, Aircraft Certification Service.

[FR Doc. 05–20679 Filed 10–14–05; 8:45 am]

BILLING CODE 4910–13–P

DEPARTMENT OF TRANSPORTATION

Federal Aviation Administration

14 CFR Part 39

[Docket No. FAA–2005–22696; Directorate Identifier 2005–SW–22–AD]

RIN 2120–AA64

Airworthiness Directives; Bell Helicopter Textron Canada Model 206A, B, L, L–1, L–3, and L–4 Helicopters

AGENCY: Federal Aviation Administration, DOT.

ACTION: Notice of proposed rulemaking (NPRM).

SUMMARY: This document proposes superseding an existing airworthiness directive (AD) for the specified Bell Helicopter Textron Canada (BHTC) model helicopters. That AD currently requires an initial inspection and at specified intervals checks and inspections of the tail rotor blade (blade) for a deformation, a crack, and a bent or deformed tail rotor weight (weight). Also, that AD requires, before further flight, replacing each blade with an airworthy blade if a deformation, a crack, or a bent or deformed weight is found. This action would contain the same actions as the existing AD and would also propose adding certain serial-numbered blades to the applicability that were inadvertently omitted from the current AD and would require replacing each affected blade, which would be terminating action. This proposal is prompted by three reports of skin cracks originating near the blade trailing edge balance weight. The actions specified by the proposed AD are intended to prevent blade failure and subsequent loss of control of the helicopter.

DATES: Comments must be received on or before December 16, 2005.

ADDRESSES: Use one of the following addresses to submit comments on this proposed AD:

- DOT Docket Web Site: Go to *http://dms.dot.gov* and follow the instructions for sending your comments electronically;
- Government-Wide Rulemaking Web Site: Go to *http://www.regulations.gov* and follow the instructions for sending your comments electronically;
- Mail: Docket Management Facility; U.S. Department of Transportation, 400 Seventh Street, SW., Nassif Building, Room PL–401, Washington, DC 20590;
- Fax: 202–493–2251; or
- Hand Delivery: Room PL–401 on the plaza level of the Nassif Building, 400 Seventh Street, SW., Washington, DC, between 9 a.m. and 5 p.m., Monday through Friday, except Federal holidays.
- You may get the service information identified in this proposed AD from Bell Helicopter Textron Canada, 12,800 Rue de l'Avenir, Mirabel, Quebec J7J1R4, telephone (450) 437–2862 or (800) 363–8023, fax (450) 433–0272
- You may examine the comments to this proposed AD in the AD docket on the Internet at *http://dms.dot.gov*.

FOR FURTHER INFORMATION CONTACT: Sharon Miles, Aviation Safety Engineer, FAA, Rotorcraft Directorate, Regulations and Guidance Group, Fort Worth, Texas 76193–0111, telephone (817) 222–5122, fax (817) 222–5961.

SUPPLEMENTARY INFORMATION:

Comments Invited

We invite you to submit any written data, views, or arguments regarding this proposed AD. Send your comments to the address listed under the caption **ADDRESSES**. Include the docket number "FAA–2005–22696, Directorate Identifier 2005–SW–22–AD" at the beginning of your comments. We specifically invite comments on the overall regulatory, economic, environmental, and energy aspects of the proposed AD. We will consider all comments received by the closing date and may amend the proposed AD in light of those comments.

We will post all comments we receive, without change, to *http://dms.dot.gov*, including any personal information you provide. We will also post a report summarizing each substantive verbal contact with FAA personnel concerning this proposed rulemaking. Using the search function of our docket web site, you can find and read the comments to any of our dockets, including the name of the individual who sent or signed the comment. You may review the DOT's complete Privacy Act Statement in the **Federal Register** published on April 11, 2000 (65 FR 19477–78), or you may visit *http://dms.dot.gov*. The postcard will be date stamped and returned to the commenter.

Examining the Docket

You may examine the docket that contains the proposed AD, any comments, and other information in person at the Docket Management System (DMS) Docket Office between 9 a.m. and 5 p.m., Monday through Friday, except Federal holidays. The Docket Office (telephone 1–800–647–5227) is located at the plaza level of the Department of Transportation NASSIF Building in Room PL–401 at 400

Seventh Street, SW., Washington, DC. Comments will be available in the AD docket shortly after the DMS receives them.

Discussion

On November 22, 2004, the FAA issued AD 2004–24–08, Docket No. 2004–SW–12–AD, Amendment 39–13884 (69 FR 69810, December 1, 2004). That AD requires an initial inspection and at intervals not to exceed 12 hours time-in-service (TIS), a 10X inspection or at intervals not to exceed 24 hours TIS a 10X inspection and a 3-hour TIS check between each 24 hour TIS inspection of the blade for a deformation, a crack, and a bent or deformed weight. Also, that AD requires, before further flight, replacing each blade with an airworthy blade if a deformation, a crack, or a bent or deformed weight is found. That action was prompted by three reports of skin cracks originating near the blade trailing edge balance weight. The requirements of that AD are intended to prevent blade failure and subsequent loss of control of the helicopter.

Since issuing AD 2004–24–08, BHTC has issued Alert Service Bulletin 206–04–100 for Bell Model 206A and B helicopters, and 206L–04–127 for Bell Model 206L series helicopters, both Revision C, both dated March 5, 2005 (ASB). These ASBs add two warnings in the compliance section specifying returning the blade for balancing to Rotor Blades, Inc., and introduce new skin damage limits that supersede the previous damage limits. The ASB also gives a new address for Rotor Blades Inc.

When we issued AD 2004–24–08, we intentionally did not include the long-term requirement (no later than April 27, 2007) for removing and sending the affected blades to Rotor Blades, Inc. as specified by the manufacturer. We are including in this proposal a long-term requirement that the affected blades be replaced on or before April 27, 2007, as terminating action. This will allow public comments before any adoption of the long-term proposal. Additionally, in AD 2004–24–08, we inadvertently omitted blade serial numbers 10102 through 10114 from the applicability. We propose to correct that oversight with this action.

Transport Canada, the airworthiness authority for Canada, notified the FAA that an unsafe condition may exist on these helicopter models. Transport Canada advises of three reports of skin cracks originating near the blade trailing edge balance weight. Two of the occurrences caused a loss of the weight and a strip of material along the trailing edge leading to an imbalance, which caused the fracture of three of the four tail rotor gearbox attachments. One of these occurrences resulted in the gearbox shifting that caused failure of the drive shaft and resulting loss of yaw control. Transport Canada issued AD No. CF–2004–05R1, dated June 28, 2004, to ensure the continued airworthiness of these helicopters in Canada.

These helicopter models are manufactured in Canada and are type certificated for operation in the United States under the provisions of 14 CFR 21.29 and the applicable bilateral agreement. Pursuant to the applicable bilateral agreement, Transport Canada has kept the FAA informed of the situation described above. The FAA has examined the findings of Transport Canada, reviewed all available information, and determined that AD action is necessary for products of these type designs that are certificated for operation in the United States.

Interested persons were afforded an opportunity to participate in the making of AD 2004–24–08, Amendment 39–13884, Docket No. 2004–SW–12–AD, which we are proposing to supersede. Due consideration has been given to the one comment received.

The commenter expresses concern about the 12-hour blade inspection by a mechanic and states the inspection will make this helicopter unsuitable for its intended use. The commenter states the alternate pilot check and mechanic inspection would require them to shut down 4–5 times each day increasing engine cycles. The commenter further states that since the only difference between the pilot check and the mechanic inspection is the 10X magnifier, pilots need to be certified to perform the 12-hour inspection.

While the FAA agrees the checks and inspections could increase engine cycles, the primary purpose of issuing an AD is to correct an unsafe condition. However, the terminating action proposed in this AD would eliminate the current mandated inspections. We do not agree that pilots need to be certified to perform inspections. Current FAA policy allows pilots holding at least a private pilot certificate to perform checks that do not require the use of tools, precision measuring equipment, training, pilot logbook endorsements, or reference to technical data not contained in the body of the AD. Pilots may only perform simple maintenance tasks that do not require special maintenance training. The inspection in the AD requires the use of a 10X or higher magnifying glass, which is not considered a simple visual check. In the interest of safety, the inspection must occur at the specified intervals and be performed by a qualified mechanic until the terminating action is accomplished.

The previously described unsafe condition is likely to exist or develop on other helicopters of these same type designs. Therefore, the proposed AD would supersede AD 2004–24–08 to require:

- Before further flight, unless accomplished previously, and before installing any blade with an affected part number and serial number (S/N), cleaning the blade. Then, using a 10X or higher magnifying glass, inspecting both sides of each blade for a deformation, a crack, and a bent or deformed weight.
- Thereafter, cleaning both sides of each blade and using a 10X or higher magnifying glass, inspecting for a deformation, a crack, and a bent or deformed weight as follows:
- At intervals not to exceed 12 hours TIS, or
- At intervals not to exceed 24 hours TIS and checking both sides of each blade for a deformation, a crack, and a bent or deformed weight at intervals not to exceed 3 hours TIS between inspections. An owner/operator (pilot) holding at least a private pilot certificate may perform the 3-hour TIS check for deformed or cracked blades and for bent or deformed weights. Pilots may perform these checks because they require no tools, can be done by observation, and can be done equally well by a pilot or a mechanic. However, the pilot must enter compliance with these requirements into the helicopter maintenance records by following 14 CFR 43.11 and 91.417(a)(2)(v).
- Before further flight, replacing each blade with an airworthy blade if you find a deformation, a crack, or a bent or deformed weight.
- On or before April 27, 2007, replacing each affected blade with an airworthy blade that is identified by a ''V'' at the end of the blade S/N or an airworthy blade with a S/N other than one listed in the applicability section of this AD.

Replacing each blade with an airworthy blade that is identified by a ''V'' at the end of the blade S/N or an airworthy blade with a S/N other than one listed in the applicability section of this AD constitutes terminating action for the requirements of this AD.

The FAA estimates that this proposed AD would:

- Affect 2194 helicopters of U.S. registry,
- Take about ¼ work hour for a blade check or inspection, and

• Take 3 work hours to replace a blade at an average labor rate of $65 per work hour. Required parts would cost about $5848 per helicopter. (In its ASB, the manufacturer states it will give warranty credit based on hour usage on the blade with remaining life hours and other restrictions.) Based on these figures, we estimate the total cost impact of the proposed AD on U.S. operators to be $19,989,973. Costs assume—200 pilot checks, 26 mechanic inspections, and one blade replacement for 90 percent of the fleet with a nonconforming blade.

Regulatory Findings

The regulations proposed herein would not have a substantial direct effect on the States, on the relationship between the national Government and the States, or on the distribution of power and responsibilities among the various levels of government. Therefore, it is determined that this proposal would not have federalism implications under Executive Order 13132.

For the reasons discussed above, I certify that this proposed regulation (1) is not a ''significant regulatory action'' under Executive Order 12866; (2) is not a ''significant rule'' under the DOT Regulatory Policies and Procedures (44 FR 11034, February 26, 1979); on a substantial number of small entities under the criteria of the Regulatory Flexibility Act. A copy of the draft regulatory evaluation prepared for this action is contained in the Rules Docket. A copy of it may be obtained by contacting the Rules Docket at the location provided under the caption **ADDRESSES**.

Authority for This Rulemaking

Title 49 of the United States Code specifies the FAA's authority to issue rules on aviation safety. Subtitle I, section 106, describes the authority of the FAA Administrator. Subtitle VII, Aviation Programs, describes in more detail the scope of the Agency's authority.

We are issuing this rulemaking under the authority described in subtitle VII, part A, subpart III, section 44701, ''General requirements.'' Under that section, Congress charges the FAA with promoting safe flight of civil aircraft in air commerce by prescribing regulations for practices, methods, and procedures the Administrator finds necessary for safety in air commerce. This regulation is within the scope of that authority because it addresses an unsafe condition that is likely to exist or develop on products identified in this rulemaking action.

List of Subjects in 14 CFR Part 39

Air transportation, Aircraft, Aviation safety, Safety.

The Proposed Amendment

Accordingly, pursuant to the authority delegated to me by the Administrator, the Federal Aviation Administration proposes to amend part 39 of the Federal Aviation Regulations (14 CFR part 39) as follows:

PART 39—AIRWORTHINESS DIRECTIVES

1. The authority citation for part 39 continues to read as follows:

Authority: 49 U.S.C. 106(g), 40113, 44701.

§ 39.13 [Amended]

2. Section 39.13 is amended by removing Amendment 39–13884 (69 FR 69810, December 1, 2004), and by adding a new airworthiness directive (AD), to read as follows:

Bell Helicopter Textron Canada: Docket No. FAA–2005, Directorate Identifier 2005–SW–22–AD. Supersedes AD 2004–24–08, Amendment 39–13884, Docket No. 2004–SW–12–AD.

Applicability: Model 206A, B, L, L–1, L–3, and L–4 helicopters, with a tail rotor blade (blade) with the following part number (P/N) and serial number (S/N) installed, certificated in any category.

Model 206A & B; Blade, P/N 206–016–201–133, S/N with prefix ''CS'' and no ''V'' suffix	Model 206A, B, L, L–1, L–3, & L–4; Blade, P/N P/N 206–016–201–131, S/N with prefix ''CS'' and no ''V'' suffix	
1381 through 1442	7000 through 7018	10174 through 10218
1492 through 1517	7020 through 7043	10220
1520 through 1542	7045 through 7050	10232
1550	7052 through 7132	10235
1556	7134 through 7246	10237 through 10241
1560	7248 through 7270	10244
1562	7272 through 7277	10245
1564 through 1567	7279 through 7339	10248
1569 through 1606	7342 through 7368	10250 through 10264
1609	7784	10266 through 10268
1611	7786	10270 through 10274
1612	7788	10276 through 10278
1614 through 1631	7790 through 7796	10280 through 10282
1633 through 1675	7798 through 7819	10284 through 10292
1677	7821 through 7833	10296
1678	7835 through 7839	10300 through 10330
1680 through 1682	7841 through 8001	10332
1684 through 1787	8003 through 8026	10333
1789 through 1803	8029 through 8061	10335 through 10347
1810 through 1812	8064 through 8117	10349
1814	8119	10351 through 10359
1816	8121 through 8139	10363 through 10365
1820	8142 through 8176	10367
1823 through 1831	8178 through 8262	10373
1834 through 1836	8264 through 8294	10374
1838	8298 through 8368	10377 through 10385
1840 through 1844	8370 through 8375	10387 through 10408
1846	8378 through 8416	10410
1848 through 1882	8419	10414 through 10417
1884 through 1887	8421	10419 through 10427
1889 through 1893	8425 through 8428	10430
1896 through 1898	8430 through 8438	10432
1900	8440	10437
1904	8441	10438

Model 206A & B; Blade, P/N 206–016–201–133, S/N with prefix "CS" and no "V" suffix	Model 206A, B, L, L–1, L–3, & L–4; Blade, P/N P/N 206–016–201–131, S/N with prefix "CS" and no "V" suffix	
1909 through 1912	8443	10442 through 10445
1915	8445 through 8447	10458 through 10466
1916	8449 through 8606	10469
1919 through 1921	8608 through 8622	10470
1924	8624 through 8626	10474
1928 through 1931	8628 through 8632	10476 through 10478
1933	8635 through 8653	10480 through 10487
1934 through 1939	8655 through 8686	10489 through 10491
1943	8690	10493 through 10495
1945	8692 through 8700	10497 through 10503
1947	8703 through 8715	10505 through 10588
1948	8717 through 8722	10591 through 10606
1952 through 1957	8724 through 8742	10608 through 10610
1960	8745 through 8828	10612 through 10620
1962 through 1965	8830 through 8835	10623
	8838 through 8840	10624
	8842 through 8881	10631 through 10655
	8883 through 9032	10657 through 10669
	9034 through 9139	10672
	9141 through 9198	10673
	9200	10676 through 10678
	9202 through 9302	10680 through 10683
	9304 through 9339	10685
	9341 through 9371	10687
	9373 through 9411	10689 through 10702
	9413	10707
	9415 through 9417	10712
	9419 through 9496	10715
	9498 through 9585	10730
	9587 through 9594	10732 through 10734
	9596 through 9618	10736
	9621 through 9629	10738
	9632 through 9642	10739
	9645 through 9651	10746
	9653 through 9673	10750
	9675 through 9707	10756
	9709 through 9724	10760
	9727 through 9731	10761
	9733 through 9735	10765
	9737 through 9739	10770
	9741 through 9748	10774 through 10776
	9751 through 9785	10778
	9787	10781
	9788	10783 through 10785
	9790 through 9792	10792
	9795 through 9847	10794
	9849 through 9928	10798
	9930 through 9937	10799
	9940 through 9942	10806 through 10808
	9944 through 9952	10811
	9955 through 9972	10814 through 10822
	9974 through 9989	10824
	9991 through 9995	10825
	9997 through 10004	10829
	10006 through 10009	10831
	10011	10917
	10013 through 10018	10923
	10021 through 10030	10931
	10034	10936
	10036 through 10057	10937
	10061 through 10082	10940
	10090 through 10092	10943
	10094 through 10100	10945
	10102 through 10114	10947
	10116	10948
	10119	10964
	10121	10965
	10123 through 10134	10973
	10136 through 10140	10982
	10142 through 10144	10985
	10146 through 10172	10986

Compliance: Required as indicated.

To prevent blade failure and subsequent loss of control of the helicopter, do the following:

(a) Before further flight, unless accomplished previously, and before installing any blade with a P/N and S/N listed in the applicability section of this AD, clean the blade. Using a 10X or higher magnifying glass, inspect both sides of each blade for a deformation, a crack, and a bent or deformed weight in the area shown in Figure 1 of this AD.

Note 1: Paint irregularities on the blade may indicate a crack.

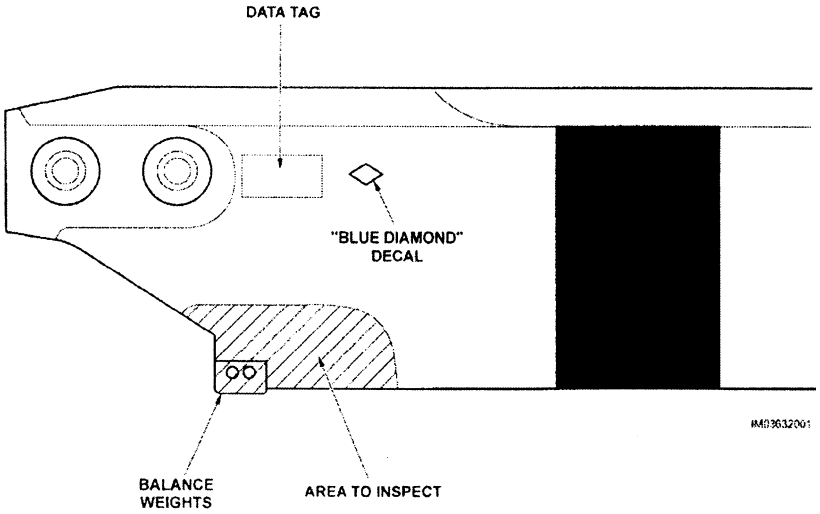

Figure 1. Tail rotor blade inspection.

(b) After doing paragraph (a) of this AD, at the following intervals, clean both sides of each blade and do either paragraph (1) or (2) as follows:

(1) At intervals not to exceed 12 hours time-in-service (TIS), using a 10X or higher magnifying glass, inspect both sides of each blade for a deformation, a crack, and a bent or deformed weight in the area shown in Figure 1 of this AD, or

(2) Inspect and check both sides of each blade for a deformation, a crack, and a bent or deformed weight in the area shown in Figure 1 of this AD as follows:

(i) Using a 10X or higher magnifying glass, inspect at intervals not to exceed 24 hours TIS, and

(ii) Check at intervals not to exceed 3 hours TIS between the inspections required by paragraph (b)(2)(i) of this AD. An owner/operator (pilot), holding at least a private pilot certificate, may perform this visual check and must enter compliance with this paragraph into the helicopter maintenance records by following 14 CFR sections 43.11 and 91.417(a)(2)(v).

(c) Before further flight, replace any blade that has a deformation, a crack, or a bent or deformed weight with an airworthy blade.

Note 2: Bell Helicopter Textron Alert Service Bulletin No. 206–04–100 for Model 206A and B and No. 206L–04–127 for Model 206L series, both Revision C, both dated March 5, 2005, pertain to the subject of this AD.

(d) On or before April 27, 2007, for any affected part-numbered blade with a S/N listed in the applicability section of this AD:

(1) Replace the blade with a blade that has a S/N other than one listed in the applicability section of this AD, or

(2) Replace the blade with a blade that has a S/N listed in the applicability section of this AD and also has a ''V'' suffix.

(e) Replacing each blade with an airworthy blade as required by paragraph (d) of this AD constitutes terminating action for the requirements of this AD.

(f) To request a different method of compliance or a different compliance time for this AD, follow the procedures in 14 CFR 39.19. Contact the Safety Management Group, Rotorcraft Directorate, FAA, for information about previously approved alternative methods of compliance.

Note 3: The subject of this AD is addressed in Transport Canada (Canada) AD No. CF–2004–05R1, dated June 28, 2004.

Issued in Fort Worth, Texas, on October 7, 2005.

David A. Downey,

Manager, Rotorcraft Directorate, Aircraft Certification Service.

[FR Doc. 05–20681 Filed 10–14–05; 8:45 am]

BILLING CODE 4910–13–P

SOCIAL SECURITY ADMINISTRATION

20 CFR Parts 404, 408 and 416

RIN 0960–AG09

Representative Payment Policies and Administrative Procedure for Imposing Penalties for False or Misleading Statements or Withholding of Information

AGENCY: Social Security Administration (SSA).

ACTION: Proposed rules.

SUMMARY: We propose to amend our regulations on representative payment and on the administrative procedure for imposing penalties for false or misleading statements or withholding of information to reflect and implement certain provisions of the Social Security Protection Act of 2004 (SSPA), Public Law 108–203. The SSPA amends representative payment policies by providing additional safeguards for Social Security, Special Veterans and Supplemental Security Income beneficiaries served by representative payees. These changes include additional disqualifying factors for representative payee applicants, additional requirements for non-governmental fee-for-service payees, authority to redirect delivery of benefit payments when a representative payee fails to provide required accountings, and authority to treat misused benefits as an overpayment to the representative payee. In addition, we propose to modify our rules to explain financial requirements for representative payees, and we also have made minor clarifying plain language changes.

The SSPA also allows SSA to impose a penalty on any person who knowingly withholds information that is material for use in determining any right to or the amount of monthly benefits under titles II or XVI. The penalty is nonpayment for a specified number of months of benefits under title II that would otherwise be payable and ineligibility for the same period of time for cash benefits under title XVI (including State supplementary payments).

DATES: To consider your comments, we must receive them no later than December 16, 2005.

ADDRESSES: You may give us your comments by: using our Internet facility (*i.e.,* Social Security Online) at *http://policy.ssa.gov/pnpublic.nsf/LawsRegs* or the Federal eRulemaking Portal at *http://www.regulations.gov;* e-mail to *regulations@ssa.gov;* telefax to (410) 966–2830; or letter to the Commissioner of Social Security, P.O. Box 17703, Baltimore, MD 21235–7703. You may also deliver them to the Office of Regulations, Social Security Administration, 100 Altmeyer Building, 6401 Security Boulevard, Baltimore, MD 21235–6401, between 8 a.m. and 4:30 p.m. on regular business days. Comments are posted on our Internet site, or you may inspect them physically on regular business days by making arrangements with the contact person shown in this preamble.

Electronic Version

The electronic file of this document is available on the date of publication in the **Federal Register** on the Internet site for the Government Printing Office, *http://www.gpoaccess.gov/fr/index.html*. It is also available on the Internet site for SSA (*i.e.,* Social Security Online) at *http://policy.ssa.gov/pnpublic.nsf/LawsRegs*.

FOR FURTHER INFORMATION CONTACT: Regarding this **Federal Register** document—Robert Augustine, Social Insurance Specialist, Office of Regulations, Social Security Administration, 6401 Security Boulevard, Baltimore, MD 21235–6401, (410) 965–0020 or TTY (410) 966–5609; regarding eligibility or filing for benefits—our national toll-free number, 1–800–772–1213 or TTY 1–800–325–0778 or visit our Internet Web site, Social Security Online, at *http://www.socialsecurity.gov*.

SUPPLEMENTARY INFORMATION:

Background

Public Law 108–203, the SSPA, enacted March 2, 2004, requires a number of changes to representative payee policy and procedures. A representative payee is the person, agency, organization, or institution selected to receive and manage benefits on behalf of an incapable beneficiary. This includes a parent who is receiving benefits on behalf of his or her minor child. The SSPA also changes the rules for imposing penalties for false or misleading statements or for withholding information.

Section 102 of the SSPA requires non-governmental fee-for-service organizational representative payees to be both bonded and licensed, provided that licensing is available in the State.

Section 103 of the SSPA expands the scope of disqualification to prohibit an individual from serving as a representative payee if he or she: (1) Has been convicted of any offense resulting in imprisonment for more than 1 year, unless the Commissioner of Social Security determines that an exception to this prohibition is appropriate; or (2) is fleeing to avoid prosecution, or custody or confinement after conviction of a crime that is a felony.

Section 104 of the SSPA requires fee-for-service representative payees to forfeit their fees for any months during which they misuse all or part of any beneficiary's benefits.

Section 105 of the SSPA makes non-governmental representative payees liable for any benefits they misuse and requires SSA to treat such misused benefits as overpayments to the representative payees, subject to overpayment recovery authorities.

Section 106 of the SSPA authorizes the Commissioner of Social Security to require a representative payee to receive benefits in person at a Social Security field office or a United States Government facility designated by the Social Security Administration if the payee fails to provide an annual accounting of benefits report or other requested information.

In addition to the changes required by Public Law 108–203, we propose to clarify financial requirements for representative payees. Our current regulations specify that the interest earned on conserved funds belongs to the beneficiary. However, the regulations do not specifically address interest earned on current benefits or how current benefits should be held. We propose to specify that a representative payee must keep any payments received for the beneficiary separate from the representative payee's own funds and ensure that the beneficiary's ownership is shown unless the representative payee is the spouse or parent of the beneficiary and lives in the same household with the beneficiary. We also propose to provide for an exception to this requirement for State or local government agencies when we determine that their accounting structure sufficiently protects the beneficiaries' interest in the benefits (*i.e.*, accounting structure clearly identifies what funds belong to the beneficiary). We further propose to specify that the payee must treat any interest earned on current benefits as the beneficiary's own property. In addition, we propose to clarify that the payee is responsible for making records available for review if requested by us. These records must be examined when conducting our site visits.

Section 201(a)(2) of the SSPA amended section 1129A of the Act to help prevent and respond to fraud and abuse in SSA's programs and operations. Prior to its amendment by the SSPA, section 1129A allowed SSA to impose a penalty against any person

who makes, or causes to be made, a statement or representation of a material fact that the person knows or should know is false or misleading or that omits a material fact, or that the person makes with a knowing disregard for the truth. The statement must have been made for use in determining eligibility for or the amount of benefits under titles II or XVI. The penalty is nonpayment for 6, 12 or 24 months of benefits under title II that would otherwise be payable to the person and ineligibility for the same period of time for cash benefits under title XVI (including State supplementary payments made by SSA according to § 416.2005).

Section 201(a)(2) amended section 1129A to also allow SSA to impose this penalty against any person who withholds disclosure of information that is material for use in determining any right to or the amount of monthly benefits under titles II or XVI if the person knows, or should know, that the withholding of such disclosure is misleading. Prior to the enactment of section 201(a)(2), in order for a penalty to be imposed, the law required an affirmative act on the part of the individual of making a statement that omitted a material fact.

This new penalty under section 1129A of the Act will be effective with respect to violations committed after the date on which SSA implements the centralized computer file described in section 202 of the SSPA. This centralized computer file will electronically record information about changes in work status that a disability beneficiary (or representative) reports to SSA and is expected to be implemented in February 2006.

Explanation of Proposed Changes on Representative Payment

Because our regulations for representative payment under the title VIII program cross-reference the appropriate material in our title II representative payment rules, most of the changes we now propose to our title II representative payment regulations would also apply to title VIII. Where only a cross-reference to the title II rules would not be sufficient, we propose a specific rule for title VIII.

We are proposing the following policy changes to our representative payment regulations:

1. We propose to amend §§ 404.2022 and 416.622 to explain that a person who is convicted of an offense resulting in imprisonment for more than 1 year may not serve as a representative payee. These sections also would explain that we may make an exception to this rule if the nature of the conviction poses no risk to the beneficiary and selection of the applicant is in the beneficiary's best interest. In addition, these sections would explain that a person who is fleeing prosecution, custody or confinement for a crime, or an attempt to commit a crime that is a felony may not serve as a representative payee. If we identify a currently serving payee who is no longer qualified for this reason, we will allow them 10 days to respond to notification before making any payee change.

2. We propose to amend §§ 404.2035 and 416.635 to explain that a representative payee must keep any payments received for the beneficiary separate from the payee's own funds and ensure the beneficiary's ownership is shown unless the payee is the spouse or parent of the beneficiary and lives in the same household with the beneficiary. We also propose to provide for an exception to this requirement for State or local government agencies that use a different accounting structure. We would grant such an exception to a State or local government agency if we determine that its accounting structure sufficiently protects the beneficiaries' interest in the benefits. Also, these sections would explain that the payee must treat any interest earned on current benefits as the beneficiary's own property.

3. We propose to amend §§ 404.2035 and 416.635 to require representative payees to make available to us their records supporting their written accounting reports. We believe those records are essential to verify the written reports.

4. We propose to amend existing §§ 404.2040a and 416.640a to require fee-for-service non-governmental community-based nonprofit organizational representative payees to be both bonded and licensed (provided that licensing is available in the State). The bond would have to be of a sufficient amount to repay any funds (current social security benefits and supplemental security income payments plus any conserved funds and interest) lost by the beneficiaries in the event of misuse or theft, and the license would have to be appropriate under the laws of the State for the type of services the organization provides. These bonding and licensing requirements would not apply to the title VIII program. In addition, these sections would explain that a fee-for-service representative payee must forfeit its fee for the months during which it misused benefits.

5. We propose to amend §§ 404.2041 and 416.641 to explain that a non-governmental representative payee will be liable for any benefits it misuses and that SSA will treat the misused benefits as an overpayment to the representative payee, subject to overpayment recovery authorities.

6. We propose to amend §§ 404.2065 and 416.665 to explain that we may require a representative payee to receive benefits in person at a local Social Security field office or a United States Government facility designated by the Social Security Administration if the payee fails to provide an annual accounting of benefits or other requested information. We propose to make a similar amendment to § 408.665, but the benefits would be directed to a United States Government facility designated by the Social Security Administration.

Explanation of Proposed Changes on Administrative Procedures for Imposing Administrative Penalties

We propose to amend §§ 404.459 and 416.1340 of our regulations by revising the heading and paragraphs (a) and (e) of each section to reflect that, as a result of section 201 of the SSPA, an individual will be subject to the penalty if he or she withholds information that is material for use in determining any right to or the amount of monthly benefits under title II or XVI if the person knows, or should know, that the withholding of the information is misleading.

Clarity of These Regulations

Executive Order 12866, as amended by Executive Order 13258, requires each agency to write all rules in plain language. In addition to comments you may have on the substance of these proposed rules, we also invite your comments on how to make these rules easier to understand. For example:

- Have we organized the material to suit your needs?
- Are the requirements in the rules clearly stated?
- Do the rules contain technical language or jargon that is not clear?
- Would a different format (grouping and order of sections, use of headings, paragraphing) make the rules easier to understand?
- Would more (but shorter) sections be better?
- Could we improve clarity by adding tables, lists, or diagrams?
- What else could we do to make the rules easier to understand?

Regulatory Procedures

Executive Order 12866

We have consulted with the Office of Management and Budget (OMB) and determined that these proposed rules

meet the criteria for a significant regulatory action under Executive Order 12866, as amended by Executive Order 13258. Thus, the rules have been reviewed by OMB.

Executive Order 13132 (Federalism) and the Unfunded Mandates Reform Act of 1995

We have reviewed the proposed rules for compliance with Executive Order 13132 and the Unfunded Mandates Reform Act of 1995 (UMRA of 1995). We have determined that the proposed rules are not significant within the meaning of the UMRA of 1995 nor will they have any substantial direct effects on the States, on the relationship between the federal government and the States, or on the distribution of power and responsibilities among the various levels of government within the meaning of Executive Order 13132.

The provision requiring a State license for certain qualified organizations seeking compensation for serving as representative payees affects a very small number of organizational payees and will not significantly impact the States. First, the total number of organizations seeking compensation is very small, approximately 800. There are a significant number of State or local government agencies within this group which we do not require to be licensed. Only the small number of remaining organizations (community-based nonprofit social service organizations) must seek State licensing. Second, such organizations should already have obtained the necessary license to be in compliance with State law. Therefore, the very small number of organizations seeking a State license will not significantly impact the States.

Regulatory Flexibility Act

We certify that these proposed rules will not have a significant economic impact on a substantial number of small entities. Therefore, a regulatory flexibility analysis, as provided for in the Regulatory Flexibility Act, as amended, is not required.

Paperwork Reduction Act

These proposed rules contain reporting requirements as shown in the table below. Where the public reporting burden is accounted for in Information Collection Requests for the various forms that the public uses to submit the information to SSA, a 1-hour placeholder burden is being assigned to the specific reporting requirement(s) contained in these rules; we are seeking clearance of these burdens because they were not considered during the clearance of the forms.

Section	Annual number of responses	Frequency of response	Average burden per response	Estimated annual burden
404.2035(d)	550,000	1	.083	45,650
404.2035(e); 404.2065; 408.665				1
404.2035(f)	5,500	1	.083	457
416.635(d)	300,000	1	.083	24,900
416.635(e); 416.665				1
416.635(f)	3,000	1	.083	250
Total	858,500			71,257

An Information Collection Request has been submitted to OMB. We are soliciting comments on the burden estimate; the need for the information; its practical utility; ways to enhance its quality, utility and clarity; and on ways to minimize the burden on respondents, including the use of automated collection techniques or other forms of information technology. Comments should be submitted and/or faxed to OMB and to the Social Security Administration at the following addresses/numbers: Office of Management and Budget, Attn: Desk Officer for SSA, Fax Number: 202–395–6974. Social Security Administration, Attn: SSA Reports Clearance Officer, Rm: 1338 Annex Building, 6401 Security Boulevard, Baltimore, MD 21235–6401, Fax Number: 410–965–6400.

Comments can be received for up to 60 days after publication of this notice and will be most useful if received within 30 days of publication. To receive a copy of the OMB clearance package, you may call the SSA Reports Clearance Officer on 410–965–0454.

(Catalog of Federal Domestic Assistance Program Nos. 96.001, Social Security-Disability Insurance; 96.002, Social Security-Retirement Insurance; 96.004, Social Security-Survivors Insurance; 96.006, Supplemental Security Income; 96.020, Special Benefits for Certain World War II Veterans)

List of Subjects

20 CFR Part 404

Administrative practice and procedure, Blind, Disability benefits, Old-Age, Survivors and Disability Insurance; Reporting and recordkeeping requirements, Social Security.

20 CFR Part 408

Administrative practice and procedure, Aged; Reporting and recordkeeping requirements, Social Security; Special Veterans benefits; Veterans.

20 CFR Part 416

Administrative practice and procedure, Aged, Blind, Disability benefits, Public assistance programs, Reporting and recordkeeping requirements, Supplemental security income (SSI).

Dated: October 7, 2005.

Jo Anne B. Barnhart,

Commissioner of Social Security.

For the reasons set out in the preamble, we propose to amend subparts E and U of part 404, subpart F of part 408, and subparts F and M of part 416 of Title 20 of the Code of Federal Regulations as follows:

PART 404—FEDERAL OLD-AGE, SURVIVORS AND DISABILITY INSURANCE (1950–)

Subpart E—[Amended]

1. The authority citation for subpart E of part 404 continues to read as follows:

Authority: Secs. 202, 203, 204(a) and (e), 205(a) and (c), 216(l), 223(e), 224, 225, 702(a)(5), and 1129A of the Social Security Act (42 U.S.C. 402, 403, 404(a) and (e), 405(a) and (c), 416(l), 423(e), 424a, 425, 902(a)(5), 1320a–8a) and 48 U.S.C. 1801.

2. Amend § 404.459 by revising the heading and paragraphs (a) and (e) to read as follows:

§ 404.459 Penalty for making false or misleading statements or withholding information.

(a) *When may SSA penalize me?* You will be subject to a penalty if:

(1) You make, or cause to be made, a statement or representation of a material fact, for use in determining any initial or continuing right to, or the amount of, monthly insurance benefits under title II or benefits or payments under title XVI, that you know or should know is false or misleading, or

(2) You make a statement or representation of a material fact for use as described in paragraph (a)(1) of this section with knowing disregard for the truth, or

(3) You omit from a statement or representation made for use as described in paragraph (a)(1) of this section, or otherwise withhold disclosure (for example, fail to come forward to notify SSA) of a fact which you know or should know is material to the determination of any initial or continuing right to, or the amount of, monthly insurance benefits under title II or benefits or payments under title XVI, if you know, or should know, that the statement or representation with such omission is false or misleading or that the withholding of such disclosure is misleading.

* * * * *

(e) *How will SSA make its decision to penalize me?* In order to impose a penalty on you, we must find that you knowingly (knew or should have known or acted with knowing disregard for the truth) made a false or misleading statement or omitted or failed to report a material fact if you knew, or should have known, that the omission or failure to disclose was misleading. We will base our decision to penalize you on the evidence and the reasonable inferences that can be drawn from that evidence, not on speculation or suspicion. Our decision to penalize you will be documented with the basis and rationale for that decision. In determining whether you knowingly made a false or misleading statement or omitted or failed to report a material fact so as to justify imposition of the penalty, we will consider all evidence in the record, including any physical, mental, educational, or linguistic limitations (including any lack of facility with the English language) which you may have had at the time. In determining whether you acted knowingly, we will also consider the significance of the false or misleading statement or omission or failure to disclose in terms of its likely impact on your benefits.

* * * * *

Subpart U—[Amended]

3. The authority citation for subpart U of part 404 continues to read as follows:

Authority: Secs. 205(a), (j), and (k), and 702(a)(5) of the Social Security Act (42 U.S.C. 405(a), (j), and (k), and 902(a)(5)).

4. Amend § 404.2022 by redesignating paragraphs (b), (c) and (d) as paragraphs (d), (e) and (f) and adding new paragraphs (b) and (c) to read as follows:

§ 404.2022 Who may not serve as a representative payee?

* * * * *

(b) Is fleeing to avoid prosecution, or custody or confinement after conviction of a crime, or an attempt to commit a crime, that is a felony under the laws of the place from which he/she flees (or, in jurisdictions that do not define crimes as felonies, is punishable by death or imprisonment for a term exceeding one year, regardless of the actual sentence imposed). If we identify a currently serving payee who is no longer qualified for this reason, we will allow them 10 days to respond to notification before making any payee change.

(c) Has been convicted of an offense resulting in imprisonment for more than 1 year. However, we may make an exception to this prohibition, if the nature of the conviction is such that selection of the applicant poses no risk to the beneficiary and the exception is in the beneficiary's best interest.

* * * * *

5. Revise § 404.2035 to read as follows:

§ 404.2035 What are the responsibilities of your representative payee?

A representative payee has a responsibility to—

(a) Use the benefits received on your behalf only for your use and benefit in a manner and for the purposes he or she determines, under the guidelines in this subpart, to be in your best interests.

(b) Keep any benefits received on your behalf separate from his or her own funds and show your ownership of these benefits unless he or she is your spouse or natural or adoptive parent or stepparent and lives in the same household with you or is a State or local government agency for whom we have granted an exception to this requirement.

(c) Treat any interest earned on the benefits as your property.

(d) Notify us of any event or change in your circumstances that will affect the amount of benefits you receive, your right to receive benefits, or how you receive them;

(e) Submit to us, upon our request, a written report accounting for the benefits received on your behalf, and make all supporting records available for review if requested by us; and

(f) Notify us of any change in his or her circumstances that would affect performance of his/her payee responsibilities.

6. Amend § 404.2040a by revising paragraph (a)(2), redesignating paragraph (g)(6) as (g)(7), and adding a new paragraph (g)(6) to read as follows:

§ 404.2040a Compensation for qualified organizations serving as representative payees.

* * * * *

(a) * * *

(2) Any community-based nonprofit social service organization founded for religious, charitable or social welfare purposes, which is tax exempt under section 501(c) of the Internal Revenue Code and which is bonded/insured to cover misuse and embezzlement by officers and employees and which is licensed in each State in which it serves as representative payee (if licensing is available in the State). The minimum amount of bonding or insurance coverage must equal the average monthly amount of social security payments received by the organization plus the amount of the beneficiaries' conserved funds (i.e., beneficiaries' saved social security benefits) plus interest on hand. For example, an organization that has conserved funds of $5,000 and receives an average of $12,000 a month in social security payments must be bonded/insured for a minimum of $17,000. The license must be appropriate under the laws of the State for the type of services the organization provides. An example of an appropriately licensed organization is a community mental health center holding a State license to provide community mental health services.

* * * * *

(g) * * *

(6) Fees for services may not be taken from beneficiary benefits for the months for which the Commissioner or a court of competent jurisdiction determines that the representative payee misused benefits. Any fees collected for such months will be treated as a part of the beneficiary's misused benefits.

* * * * *

7. Amend § 404.2041 by adding a new paragraph (f) to read as follows:

§ 404.2041 Who is liable if your representative payee misuses your benefits?

* * * * *

(f) Any amounts that the representative payee misuses and does not refund will be treated as an overpayment to that representative payee. See subpart F of part 404.

8. Amend § 404.2065 by revising the introductory text to read as follows:

§ 404.2065 How does your representative payee account for the use of benefits?

Your representative payee must account for the use of your benefits. We require written reports from your representative payee at least once a year (except for certain State institutions that participate in a separate onsite review program). We may verify how your representative payee used your benefits. Your representative payee should keep records of how benefits were used in order to make accounting reports and must make those records available upon our request. If your representative payee fails to provide an annual accounting of benefits or other required reports, we may require your payee to receive your benefits in person at the local Social Security field office or a United States Government facility designated by the Social Security Administration serving the area in which you reside. The decision to have your representative payee receive your benefits in person may be based on a variety of reasons. Some of these reasons may include the payee's history of past performance or SSA's past difficulty in contacting the payee. We may ask your representative payee to give us the following information:

* * * * *

PART 408—SPECIAL BENEFITS FOR CERTAIN WORLD WAR II VETERANS (SVB)

Subpart F—[Amended]

9. The authority citation for subpart F of part 408 continues to read as follows:

Authority: Secs. 702(a)(5), 807, and 810 of the Social Security Act (42 U.S.C. 902(a)(5), 1007, and 1010).

10. Revise § 408.665 to read as follows:

§ 408.665 How does your representative payee account for the use of your SVB benefits?

Your representative payee must account for the use of your benefits. We require written reports from your representative payee at least once a year. We may verify how your representative payee used your benefits. Your representative payee should keep records of how benefits were used in order to provide accounting reports and must make those records available upon our request. If your representative payee fails to provide an annual accounting of benefits or other required report, we may require your payee to appear in person at a United States Government facility designated by the Social Security Administration serving the area in which you reside. The decision to have your representative payee receive your benefits in person may be based on a variety of reasons. Some of these reasons may include the payee's history of past performance or SSA's past difficulty in contacting the payee. We may ask your representative payee to give us the following information:

(a) Where you lived during the accounting period;

(b) Who made the decisions on how your benefits were spent or saved;

(c) How your benefit payments were used; and

(d) How much of your benefit payments were saved and how the savings were invested.

PART 416—SUPPLEMENTAL SECURITY INCOME FOR THE AGED, BLIND AND DISABLED

Subpart F—[Amended]

11. The authority citation for subpart F continues to read as follows:

Authority: Secs. 702(a)(5), 1631(a)(2) and (d)(1) of the Social Security Act (42 U.S.C. 902(a)(5) and 1383(a)(2) and (d)(1)).

12. Amend § 416.622 by redesignating paragraphs (b), (c) and (d) as paragraphs (d), (e) and (f) and adding new paragraphs (b) and (c) to read as follows:

§ 416.622 Who may not serve as a representative payee?

* * * * *

(b) Is fleeing to avoid prosecution, or custody or confinement after conviction of a crime, or an attempt to commit a crime, that is a felony under the laws of the place from which he/she flees (or in jurisdictions that do not define crimes as felonies, is punishable by death or imprisonment for a term exceeding one year, regardless of the actual sentence imposed). If we identify a currently serving payee who is no longer qualified for this reason, we will allow them 10 days to respond to notification before making any payee change.

(c) Has been convicted of an offense resulting in imprisonment for more than 1 year. However, we may make an exception to this prohibition, if the nature of the conviction is such that selection of the applicant poses no risk to the beneficiary and the exception is in the beneficiary's best interest.

* * * * *

13. Revise § 416.635 to read as follows:

§ 416.635 What are the responsibilities of your representative payee?

A representative payee has a responsibility to—

(a) Use the benefits received on your behalf only for your use and benefit in a manner and for the purposes he or she determines under the guidelines in this subpart, to be in your best interests.

(b) Keep any benefits received on your behalf separate from his or her own funds and show your ownership of these benefits unless he or she is your spouse or natural or adoptive parent or stepparent and lives in the same household with you or is a State or local government agency for whom we have granted an exception to this requirement.

(c) Treat any interest earned on the benefits as your property.

(d) Notify us of any event or change in your circumstances that will affect the amount of benefits you receive, your right to receive benefits, or how you receive them;

(e) Submit to us, upon our request, a written report accounting for the benefits received on your behalf, and make all supporting records available for review if requested by us; and

(f) Notify us of any change in his or her circumstances that would affect performance of his/her payee responsibilities.

(g) If you are under age 18 (including cases in which your low birth weight is a contributing factor material to our determination that you are disabled), ensure that you are receiving treatment to the extent considered medically necessary and available for the condition that was the basis for providing benefits (see § 416.994a(i)).

14. Amend § 416.640a by revising paragraph (a)(2), redesignating paragraph (g)(6) as (g)(7), and adding a new paragraph (g)(6) to read as follows:

§ 416.640a Compensation for qualified organizations serving as representative payees.

* * * * *

(a) * * *

(2) Any community-based nonprofit social service organization founded for religious, charitable or social welfare purposes, which is tax exempt under section 501(c) of the Internal Revenue Code and which is bonded/insured to cover misuse and embezzlement by officers and employees and licensed in each State in which it serves as

representative payee (if licensing is available in the State). The minimum amount of bonding or insurance coverage must equal the average monthly amount of supplemental security income payments received by the organization plus the amount of the beneficiaries' conserved funds (i.e., beneficiaries' saved supplemental security income payments) plus interest on hand. For example, an organization that has conserved funds of $5,000 and receives an average of $12,000 a month in supplemental security income payments must be bonded/insured for a minimum of $17,000. The license must be appropriate under the laws of the State for the type of services the organization provides. An example of an appropriately licensed organization is a community mental health center holding a State license to provide community mental health services.

* * * * *

(g) * * *

(6) Fees for services may not be taken from beneficiary benefits for the months for which the Commissioner or a court of competent jurisdiction determines that the representative payee misused benefits. Any fees collected for such months will be treated as a part of the beneficiary's misused benefits.

* * * * *

15. Amend § 416.641 by adding a new paragraph (f) to read as follows:

§ 416.641 Who is liable if your representative payee misuses your benefits?

* * * * *

(f) Any amounts that the representative payee misuses and does not refund will be treated as an overpayment to that representative payee. See subpart E of part 416.

16. Amend § 416.665 by revising the introductory text to read as follows:

§ 416.665 How does your representative payee account for the use of benefits?

Your representative payee must account for the use of your benefits. We require written reports from your representative payee at least once a year (except for certain State institutions that participate in a separate onsite review program). We may verify how your representative payee used your benefits. Your representative payee should keep records of how benefits were used in order to make accounting reports and must make those records available upon our request. If your representative payee fails to provide an annual accounting of benefits or other required reports, we may require your payee to receive your benefits in person at the local Social Security field office or a United States Government facility designated by the Social Security Administration serving the area in which you reside. The decision to have your representative payee receive your benefits in person may be based on a variety of reasons. Some of these reasons may include the payee's history of past performance or SSA's past difficulty in contacting the payee. We may ask your representative payee to give us the following information:

* * * * *

Subpart M—[Amended]

17. The authority citation for subpart M of part 416 continues to read as follows:

Authority: Secs. 702(a)(5), 1129A, 1611–1614, 1619, and 1631 of the Social Security Act (42 U.S.C. 902(a)(5), 1320a–8a, 1382–1382c, 1382h, and 1383).

18. Amend § 416.1340 by revising the heading and paragraphs (a) and (e) to read as follows:

§ 416.1340 Penalty for making false or misleading statements or withholding information.

(a) *When may SSA penalize me?* You will be subject to a penalty if:

(1) You make, or cause to be made, a statement or representation of a material fact, for use in determining any initial or continuing right to, or the amount of, monthly insurance benefits under title II or benefits or payments under title XVI, that you know or should know is false or misleading, or

(2) You make a statement or representation of a material fact for use as described in paragraph (a)(1) of this section with knowing disregard for the truth, or

(3) You omit from a statement or representation made for use as described in paragraph (a)(1) of this section, or otherwise withhold disclosure (for example, fail to come forward to notify SSA) of, a fact which you know or should know is material to the determination of any initial or continuing right to, or the amount of, monthly insurance benefits under title II or benefits or payments under title XVI, if you know, or should know, that the statement or representation with such omission is false or misleading or that the withholding of such disclosure is misleading.

* * * * *

(e) *How will SSA make its decision to penalize me?* In order to impose a penalty on you, we must find that you knowingly (knew or should have known or acted with knowing disregard for the truth) made a false or misleading statement or omitted or failed to report a material fact if you knew, or should have known, that the omission or failure to disclose was misleading. We will base our decision to penalize you on the evidence and the reasonable inferences that can be drawn from that evidence, not on speculation or suspicion. Our decision to penalize you will be documented with the basis and rationale for that decision. In determining whether you knowingly made a false or misleading statement or omitted or failure to report a material fact so as to justify imposition of the penalty, we will consider all evidence in the record, including any physical, mental, educational, or linguistic limitations (including any lack of facility with the English language) which you may have had at the time. In determining whether you acted knowingly, we will also consider the significance of the false or misleading statement or omission or failure to disclose in terms of its likely impact on your benefits.

* * * * *

[FR Doc. 05–20697 Filed 10–14–05; 8:45 am]

BILLING CODE 4191–02–P

DEPARTMENT OF THE TREASURY

Internal Revenue Service

26 CFR Part 801

[REG–114444–05]

RIN 1545–BE45

Balanced System for Measuring Organizational and Employee Performance Within the Internal Revenue Service

AGENCY: Internal Revenue Service (IRS), Treasury.

ACTION: Notice of proposed rulemaking by cross-reference to temporary regulations.

SUMMARY: In the Rules and Regulations section of this issue of the **Federal Register**, the IRS is issuing temporary regulations designed to modify 26 CFR part 801, the regulations governing the IRS Balanced System for Measuring Organizational and Employee Performance, to clarify when quantity measures, which are not tax enforcement results, may be used in measuring organizational and employee performance. The temporary regulations affect internal operations of the IRS and the systems it employs to evaluate the performance of organizations within the IRS. The text of the temporary regulations also serves as the text of these proposed regulations.

DATES: Written or electronic comments and requests for a public hearing must be received by December 16, 2005.

ADDRESSES: Send submissions to: CC:PA:LPD:PR (REG–114444–05), Room 5203, P.O. Box 7604, Ben Franklin Station, Washington, DC 20044. Submissions may be hand delivered Monday through Friday between the hours of 8 a.m. and 4 p.m. to: CC:PA:LPD:PR (REG–114444–05), Courier's Desk, 1111 Constitution Avenue, NW., Washington, DC 20224 or sent electronically via the IRS Internet site at *http://www.irs.gov/regs* or via the Federal eRulemaking Portal at *http://www.regulations.gov* (IRS REG–114444–05).

FOR FURTHER INFORMATION CONTACT: Concerning the proposed regulations, Neil Worden, (202) 283–7900; concerning submissions of comments Robin Jones, Publications and Regulations Branch, (202) 622–3521 (not toll-free numbers).

SUPPLEMENTARY INFORMATION:

Background

Temporary regulations in the Rules and Regulations section of this issue of the **Federal Register** amend 26 CFR part 801. The temporary regulations amend part 801 to clarify when quantity measures, which are not tax enforcement results, may be used in measuring organizational and employee performance. The text of those regulations also serves as the text of these regulations. The ''Explanation of Provisions'' section of the temporary regulations explains the temporary regulations and these proposed regulations.

Special Analyses

It has been determined that this notice of proposed rulemaking is not a significant regulatory action as defined in Executive Order 12866. Therefore, a regulatory assessment is not required. It also has been determined that section 553(b) of the Administrative Procedure Act (5 U.S.C. chapter 5) does not apply to these regulations, and because the regulation does not impose a collection of information on small entities, the Regulatory Flexibility Act (5 U.S.C. chapter 6) does not apply. Pursuant to section 7805(f) of the Internal Revenue Code, this notice of proposed rulemaking will be submitted to the Chief Counsel for Advocacy of the Small Business Administration for comment on its impact on small business.

Comments and Requests for Public Hearing

Before these proposed regulations are adopted as final regulations, consideration will be given to any written or electronic comments that are timely submitted to the IRS. The IRS and the Treasury Department specifically request comments on the clarity of the proposed regulations and how they can be made easier to understand. All comments will be available for public inspection and copying. A public hearing may be scheduled if requested by any person who timely submits comments. If a public hearing is scheduled, notice of the date, time and place for the hearing will be published in the **Federal Register**.

Drafting Information

The principal author of these regulations is Karen F. Keller, Office of Associate Chief Counsel (General Legal Services). However, other personnel from the IRS participated in their development.

List of Subjects in 26 CFR Part 801

Government employees, Organization and functions (Government agencies).

Proposed Amendments to the Regulations

Accordingly, 26 CFR part 801 is proposed to be amended as follows:

PART 801—BALANCED SYSTEM FOR MEASURING ORGANIZATIONAL AND INDIVIDUAL PERFORMANCE WITHIN THE INTERNAL REVENUE SERVICE

Paragraph 1. The authority citation for Part 801 continues to read in part as follows:

Authority: 5 U.S.C. 9501 * * *.

Par. 2. Section 801.1T is redesignated as § 801.1 and amended by revising the section heading to read as follows:

§ 801.1 Balanced performance measurement system; in general.

[The text of proposed § 801.1 is the same as the text of § 801.1T published elsewhere in this issue of the **Federal Register**.]

Par. 3. Section 801.2T is redesignated as § 801.2 and amended by revising the section heading to read as follows:

§ 801.2 Measuring organizational performance.

[The text of proposed § 801.2 is the same as the text of § 801.2T published elsewhere in this issue of the **Federal Register**.]

Par. 4. Section 801.3T is redesignated as § 801.3 and amended by revising the section heading to read as follows:

§ 801.3 Measuring employee performance.

[The text of proposed § 801.3 is the same as the text of § 801.3T published elsewhere in this issue of the **Federal Register**.]

Par. 5. Section 801.4T is redesignated as § 801.4 and amended by revising the section heading to read as follows:

§ 801.4 Customer satisfaction measures.

[The text of proposed § 801.4 is the same as the text of § 801.4T published elsewhere in this issue of the **Federal Register**.]

Par. 6. Section 801.5T is redesignated as § 801.5 and amended by revising the section heading to read as follows:

§ 801.5 Employee satisfaction measures.

[The text of proposed § 801.5 is the same as the text of § 801.5T published elsewhere in this issue of the **Federal Register**.]

Par. 7. Section 801.6T is redesignated as § 801.6 and amended by revising the section heading to read as follows:

§ 801.6 Business results measures.

[The text of proposed § 801.6 is the same as the text of § 801.6T published elsewhere in this issue of the **Federal Register**.]

Par. 8. Section 801.7T is redesignated as § 801.7 and amended by revising the section heading to read as follows:

§ 801.7 Examples.

[The text of the proposed § 801.7 is the same as the text of § 801.7T published elsewhere in this issue of the **Federal Register**.]

Par. 9. Section 801.8T is redesignated as § 801.8 and amended by revising the section heading to read as follows:

§ 801.8 Effective dates.

[The text of proposed § 801.8 is the same as the text of § 801.8T published elsewhere in this issue of the **Federal Register**.]

Mark E. Matthews,

Deputy Commissioner for Services and Enforcement.

[FR Doc. 05–20438 Filed 10–14–05; 8:45 am]

BILLING CODE 4830–01–P

CORPORATION FOR NATIONAL AND COMMUNITY SERVICE

45 CFR Chapter XXV

AmeriCorps State and National, Senior Corps, and Learn and Serve

AGENCY: Corporation for National and Community Service.

ACTION: Notice inviting preliminary informal public input in advance of rulemaking on criminal background checks for AmeriCorps State/National, Senior Corps, and Learn and Serve America grant programs.

SUMMARY: The Corporation for National and Community Service (the Corporation) invites public input regarding a Corporation requirement that grantees conduct and document criminal background checks on grant-funded employees and participants who, on a recurring basis, have access to children and other vulnerable populations, including the elderly and individuals with disabilities. In addition, the Corporation seeks input concerning whether any category of individuals should, on the basis of their criminal histories, be disqualified from working or participating in a Corporation-funded project in which they have such access.

We will consider input submitted in writing, as described below, or orally in one of two conference calls we will hold on the dates listed below. The Corporation will not respond formally to this input, but will consider it in drafting any Notice of Proposed Rulemaking. The public will have a separate opportunity to provide formal comment on any proposed rule the Corporation publishes for comment in 2005 or thereafter.

DATES: Please submit written input to the Corporation as soon as possible. In addition, the Corporation will hold conference calls on this topic on October 21, 2005 and October 28, 2005. See Supplementary Information for conference call information.

ADDRESSES: You may submit written input to the Corporation by any of the following methods:

(1) Electronically through the Corporation's e-mail address system to *tbryant@cns.gov*.

(2) By fax to 202–606–3467, Attention Tom Bryant, Associate General Counsel.

(3) By mail sent to: Corporation for National and Community Service, Attn: Tom Bryant, Associate General Counsel, 1201 New York Avenue NW., Suite 10600, Washington, DC 20525.

(4) By hand delivery or by courier to the Corporation's mailroom at Room 8410 at the mail address given in paragraph (3) above, between 9 a.m. and 4 p.m. Monday through Friday, except Federal holidays.

Due to continued delays in the Corporation's receipt of mail, we strongly encourage responses via e-mail or fax. You may request this notice in an alternative format for the visually impaired.

FOR FURTHER INFORMATION CONTACT: For further information about the substance of this notice, or for information about the conference calls, contact Tom Bryant at (202) 606–6678 (*tbryant@cns.gov*). The TDD/TTY number is (800) 833–3722.

SUPPLEMENTARY INFORMATION: Many national and community service programs are dedicated to helping children learn to read, giving at-risk children better opportunities to thrive, helping the elderly maintain their independence, and otherwise serving vulnerable individuals. With that commitment comes the responsibility to safeguard the well-being of program beneficiaries, including thorough effective screening of staff, participants, and volunteers in each program. Several years ago, a Corporation-sponsored technical assistance provider published the Staff Screening Tool Kit, 2nd Edition with helpful information designed to strengthen an organization's screening process. You may download the Tool Kit at *http://www.nationalservice.gov/screeningtoolkit.*

Currently, only the AmeriCorps State and National grant program has a criminal background check requirement in its grant provisions. For the 2005–2006 program year, it states as follows:

Criminal Background Checks. Programs with members (18 and over) or grant-funded employees who, on a recurring basis, have access to children (usually defined under state or local law as un-emancipated minors under the age of 18) or to individuals considered vulnerable by the program (i.e. the elderly or individuals who are either physically or mentally disabled), shall, to the extent permitted by state and local law, conduct criminal background checks on these members or employees as part of the overall screening process.

The grantee must ensure, to the extent permitted by state or local law, that it maintains background check documentation for members and employees covered by this provision in the member or employee's file or other appropriate file. The documentation must demonstrate that, in selecting or placing an individual, the grantee or the grantee's designee (such as a site sponsor) reviewed and considered the background check's results.

The Corporation intends to codify a requirement for AmeriCorps through the formal rulemaking process and seeks input on whether the current provision should be maintained or amended.

Senior Corps is comprised of three separate programs: (1) The Foster Grandparent Program (FGP); (2) the Senior Companion Program (SCP); and (3) the Retired Senior Volunteer Program. We intend to codify a requirement for each program through the formal rulemaking process.

The Learn and Serve Program consists of (1) School-Based K–12 Programs; (2) Higher Education Programs, and (3) Community-Based Programs. Given the fact that participants in Learn and Serve programs are generally not individually attributable to a Corporation grant, we are considering whether and to what extent we should codify requirements relating to the screening of staff and participants in Learn and Serve America programs.

The Corporation intends to strengthen its internal procedures for its two Federally-conducted programs, AmeriCorps National Civilian Community Corps and AmeriCorps VISTA, outside the scope of this rulemaking process.

To inform the rulemaking process, the Corporation invites preliminary informal input from the public addressing a criminal background check requirement for grantees. The Corporation specifically invites input on the following questions:

(1) What are the most effective screening practices used by organizations that serve children and other vulnerable populations?

(2) Is recurring access to children and other vulnerable populations (i.e. the elderly or individuals who are either physically or mentally disabled) the most appropriate way to describe the predicate for the background check requirement?

(3) What are the costs associated with conducting criminal background checks?

(4) What are the types and levels of background checks that are available to grantees?

(5) Should the Corporation require grantees to obtain a background check from a specific data base (e.g. state registry or the Department of Justice's National Sex Offender Public Registry at *http://www.nsopr.gov*)?

(6) Should the Corporation codify a per se disqualification for program participants or staff based upon a particular background check finding?

(7) How should the Corporation balance the goal of including at-risk participants in national and community service programs with the need to ensure appropriate protection for vulnerable populations?

(8) What are efficient and effective ways to document background checks and how should a program document that it considered such a finding of criminal history in selecting or placing an individual?

(9) Are grantees in a particular program category already required by State or local law to have safeguards in

this area that obviate or mitigate the need for a separate grant condition?

(10) Does the current language in the AmeriCorps grant provisions appropriately define the scope of the requirement and documentation of compliance?

(11) What safeguards are necessary to protect the privacy of program participants or staff?

(12) What are the best practices to monitor and enforce compliance with requirements relating to the screening of participants?

(13) Where grantees are involved in a variety of programmatic activities, as in the case of RSVP, how should the Corporation identify those programs where volunteers and staff have access to children or other vulnerable individuals on a recurring basis?

(14) To what extent do state and local laws constrain the Corporation from requiring grantees to conduct criminal background checks on national service participants or employees, who, on a recurring basis, have access to children or other vulnerable populations?

(15) How often should a criminal background check be conducted for a national service participant who serves for two or more years?

(16) Are there categories of grantees (e.g. local school districts) for whom a separate Corporation requirement for criminal background checks might not be necessary because the grantee is already independently required to have appropriate applicant screening safeguards in place?

For more information on the Corporation, please visit our Web site at: *http://www.nationalservice.gov.*

Conference Calls and Public Input

The Corporation is planning two conference calls in October, 2005. The first will be conducted on October 21, 2005, at 3 p.m., e.s.t. and the second on October 28, 2005, also at 3 p.m. e.s.t.

The USA Toll Free Number is 1–888–790–1769. The passcode is 7282715. Each conference call will last approximately 1 hour. Please check our Web site at *http://www.nationalservice.gov/about/newsroom/releases_detail.asp?tbl_pr_id=196* for additional or updated information regarding these conference calls, or contact Tom Bryant at *tbryant@cns.gov.*

Dated: October 11, 2005.

Frank R. Trinity,

General Counsel.

[FR Doc. 05–20652 Filed 10–14–05; 8:45 am]

BILLING CODE 6050–$$–P

FEDERAL COMMUNICATIONS COMMISSION

47 CFR Parts 63 and 64

[WC Docket No. 05–271; FCC 05–150]

Consumer Protection in the Broadband Era

AGENCY: Federal Communications Commission.

ACTION: Notice of proposed rulemaking.

SUMMARY: The Federal Communications Commission (Commission) initiates this rulemaking to explore whether regulations we would adopt pursuant to the Commission's ancillary jurisdiction under Title I of the Communications Act (Act) should apply to broadband Internet access service, regardless of the underlying technology providers use to offer the service. The rulemaking seeks comment on whether the imposition of regulations in the areas of consumer privacy, unauthorized changes to service, truth-in-billing, network outage reporting, discontinuance of service, rate averaging requirements, and the corresponding ability of consumers to take advantage of Commission avenues for resolution of these consumer protection issues, is desirable and necessary as a matter of public policy, or whether we should rely on market forces to address some or all of the areas listed. The rulemaking also explores whether there are other areas of consumer protection not listed above for which the Commission should impose regulations. Overall, this rulemaking will determine whether any non-economic regulatory requirements are necessary to ensure that consumer protection needs are met by all providers of broadband Internet access service.

DATES: Comments are due on or before January 17, 2006, and reply comments are due on or before March 1, 2006.

ADDRESSES: You may submit comments, identified by WC Docket No. 05–271, by any of the following methods:

- Federal eRulemaking Portal: *http://www.regulations.gov.* Follow the instructions for submitting comments.
- Agency Web Site: *http://www.fcc.gov.* Follow the instructions for submitting comments on *http://www.fcc.gov/cgb/ecfs/.*
- E-mail: *ecfs@fcc.gov,* and include the following words in the body of the message, ''get form.'' A sample form and directions will be sent in response.
- Mail: Federal Communications Commission, 445 12th Street, SW., Washington. DC 20554.
- Hand Delivery/Courier: 236 Massachusetts Avenue, NE., Suite 110, Washington, DC 20002.

Instructions: All submissions received must include the agency name and docket number for this rulemaking. All comments received will be posted without change to *http://www.fcc.gov/cgb/ecfs/,* including any personal information provided. For detailed instructions on submitting comments and additional information on the rulemaking process, see the ''Public Participation'' heading of the **SUPPLEMENTARY INFORMATION** section of this document.

Docket: For access to the docket to read background documents or comments received, go to *http://www.fcc.gov/cgb/ecfs/.*

FOR FURTHER INFORMATION CONTACT: William Kehoe, Senior Attorney-Advisor, Competition Policy Division, Wireline Competition Bureau, at (202) 418–1580.

SUPPLEMENTARY INFORMATION: This is a summary of the Commission's Notice of Proposed Rulemaking in WC Docket No. 05–271, FCC 05–150, adopted August 5, 2005, and released September 23, 2005. The complete text of this NPRM is available for inspection and copying during normal business hours in the FCC Reference Information Center, Portals II, 445 12th Street, SW., Room CY–A257, Washington, DC 20554. This document may also be purchased from the Commission's duplicating contractor, Best Copy and Printing, Inc., 445 12th Street, SW., Room CY–B402, Washington, DC 20554, telephone (800) 378–3160 or (202) 863–2893, facsimile (202) 863–2898, or via e-mail at *www.bcpiweb.com.* It is also available on the Commission's Web site at *http://www.fcc.gov.*

Public Participation

Comments may be filed using: (1) The Commission's Electronic Comment Filing System (ECFS), (2) the Federal Government's eRulemaking Portal, or (3) by filing paper copies. *See* Electronic Filing of Documents in Rulemaking Proceedings, 63 FR 24121 (May 1, 1998).

- Electronic Filers: Comments may be filed electronically using the Internet by accessing the ECFS: *http://www.fcc.gov/cgb/ecfs/* or the Federal eRulemaking Portal: *http://www.regulations.gov.* Filers should follow the instructions provided on the Web site for submitting comments.
- For ECFS filers, filers must transmit one electronic copy of the comments for the docket number referenced in the caption. In completing the transmittal screen, filers should include their full

name, U.S. Postal Service mailing address, and the applicable docket or rulemaking number. Parties may also submit an electronic comment by Internet e-mail. To get filing instructions, filers should send an e-mail to *ecfs@fcc.gov,* and include the following words in the body of the message, ''get form.'' A sample form and directions will be sent in response.

• Paper Filers: Parties who choose to file by paper must file an original and four copies of each filing. If more than one docket or rulemaking number appears in the caption of this proceeding, filers must submit two additional copies for each additional docket or rulemaking number.

Filings can be sent by hand or messenger delivery, by commercial overnight courier, or by first-class or overnight U.S. Postal Service mail (although we continue to experience delays in receiving U.S. Postal Service mail). All filings must be addressed to the Commission's Secretary, Office of the Secretary, Federal Communications Commission.

• The Commission's contractor will receive hand-delivered or messenger-delivered paper filings for the Commission's Secretary at 236 Massachusetts Avenue, NE., Suite 110, Washington, DC 20002. The filing hours at this location are 8 a.m. to 7 p.m. All hand deliveries must be held together with rubber bands or fasteners. Any envelopes must be disposed of before entering the building.

• Commercial overnight mail (other than U.S. Postal Service Express Mail and Priority Mail) must be sent to 9300 East Hampton Drive, Capitol Heights, MD 20743.

• U.S. Postal Service first-class, Express, and Priority mail should be addressed to 445 12th Street, SW., Washington, DC 20554.

All filings must be addressed to the Commission's Secretary, Marlene H. Dortch, Office of the Secretary, Federal Communications Commission, 445 12th Street, SW., Washington, DC 20554. Parties should also send a copy of their filings to Janice Myles, Competition Policy Division, Wireline Competition Bureau, Federal Communications Commission, Room 5–C140, 445 12th Street, SW., Washington, DC 20554, or by e-mail to *janice.myles@fcc.gov.* Parties shall also serve one copy with the Commission's copy contractor, Best Copy and Printing, Inc. (BCPI), Portals II, 445 12th Street, SW., Room CY–B402, Washington, DC 20554, (202) 488–5300, or via e-mail to *fcc@bcpiweb.com.*

Synopsis of the Further Notice of Proposed Rulemaking

1. In this Notice of Proposed Rulemaking (NPRM), we seek comment on the need for any non-economic regulatory requirements necessary to ensure consumer protection needs are met by all providers of broadband Internet access service, regardless of underlying technology. This includes, but is not limited to, facilities-based providers of wireline broadband Internet access service. We conclude, in the Report and Order accompanying the NPRM, that wireline broadband Internet access service is an information service under the Act.

2. Consumers' privacy needs are no less important when consumers communicate over and use broadband Internet access than when they rely on telecommunications services. For example, a consumer may have questions about whether a broadband Internet access service provider will treat his or her account and usage information as confidential, or whether the provider reserves the right to use account information for marketing and other purposes. Section 222 of the Act establishes the regulatory framework governing telecommunications carriers' use and disclosure of CPNI and other customer information obtained by those carriers in their ''provision of a telecommunications service.'' That section requires, in general, that telecommunications carriers use or disclose CPNI only in the provision of the telecommunications service from which the CPNI is derived, or in the provision of services necessary to, or used in, the provision of such telecommunications services.

3.We seek comment on whether we should extend privacy requirements similar to the Act's CPNI requirements to providers of broadband Internet access services. For example, should we adopt rules under our Title I authority that forbid broadband Internet access providers from disclosing, without their customers' approval, information about their customers that they learn through the provision of their broadband Internet access service? We seek comment on what sort of customer proprietary information broadband Internet access providers possess, *e.g.*, information about consumers' service plans, installed equipment, or patterns of Internet access use. We note that long before Congress enacted section 222 of the Act, the Commission had recognized the need for privacy requirements associated with the provision of enhanced services and had adopted CPNI-related requirements in conjunction with other Computer Inquiry obligations.

4. Section 258 of the Act prohibits telecommunications carriers from submitting or executing an unauthorized change in a subscriber's selection of a provider of telephone exchange service or telephone toll service, a practice commonly known as ''slamming.'' In a series of orders, the Commission adopted various rules to implement section 258, and concluded that state authorities should have primary responsibility for administering the rules. By providing for state administration of slamming rules, the Commission recognized that state authorities are particularly well-equipped to handle such complaints because states are close to consumers and are familiar with trends in their regions. The Commission also recognized, however, that all states may not have the resources available to handle slamming complaints. Accordingly, the Commission's rules allow consumers in states that do not ''opt-in'' to administer the slamming rules to file slamming complaints with the Commission.

5. We seek comment on whether we should exercise our Title I authority to impose similar requirements on providers of broadband Internet access service. Commenters should explain in what circumstances subscribers to broadband Internet access could get ''slammed.'' Is the provisioning process for broadband Internet access service such that an unauthorized change in provider is more likely in situations where the provider relies on third-party broadband transmission facilities?

6. The Commission has adopted truth-in-billing rules to ensure that consumers receive accurate, meaningful information on their telecommunications bills that will allow consumers to better understand their bills, compare service offerings, and thereby promote a more efficient, competitive marketplace. In general, the Commission's rules require that a telecommunication carrier's bill must: (1) Be accompanied by a brief, clear, non-misleading, plain language description of the service or services rendered; (2) identify the service provider associated with each charge; (3) clearly and conspicuously identify any change in service provider; (4) identify those charges for which failure to pay will not result in disconnection of basic local service; and (5) provide a toll-free number for consumers to inquire or dispute any charges. The Commission's rules on truth-in-billing are designed to reduce slamming, cramming (which is the practice of

placing unauthorized, misleading, or deceptive charges on a telecommunications bill and is most likely to occur when a carrier does not clearly or accurately describe all of the relevant charges on the consumer's bill), and other telecommunications fraud by setting standards for accuracy on bills for telecommunications service.

7. We seek comment on whether we should exercise our Title I authority to impose requirements on broadband Internet access service providers that are similar to our truth-in-billing requirements or are otherwise geared toward reducing slamming, cramming, or other types of telecommunications-related fraud. For example, during 2005, the Commission's Consumer and Governmental Affairs Bureau has received complaints about the billing practices of broadband Internet access services providers, including complaints related to double billing, billing for unexplained charges, and billing for cancelled services. Overall, parties should explain what problems customers of broadband Internet access service are likely to have with their bills and whether we should address these problems through truth-in-billing-type requirements.

8. Section 63.100(a) through (e) of the Commission's rules, 47 CFR 63.100(a)–(e), requires certain communications providers to notify the Commission of outages of thirty or more minutes that affect a substantial number of customers or involve major airports, major military installations, key government facilities, nuclear power plants, or 911 facilities. We seek comment on whether we should exercise our Title I authority to impose any similar requirements on broadband Internet access service providers. Do the purposes of our network outage reporting requirements apply to outages of broadband Internet access service? Should we adopt requirements that differ depending on the nature of the facility or the type of customer served?

9. Section 214 of the Act limits a telecommunications carrier's ability to discontinue unilaterally its service to customers. Section 63.71 of the Commission's implementing rules, 47 CFR 63.71 generally requires that domestic carriers wishing to ''discontinue, reduce, or impair'' services must first request authority to do so from the Commission and must notify affected customers and others of their plans.

10. We seek comment on whether we should exercise our Title I authority to impose discontinuance-type requirements on providers of broadband Internet access service. As customers grow more dependent on broadband Internet access services, does the need for notice to customers grow stronger? Or do the multiplicity and availability of broadband Internet access providers mitigate the need for such notice?

11. Finally, we seek to ensure that our actions today do not jeopardize the policies of section 254(g). That section required the Commission to adopt rules ''to require that the rates charged by providers of interexchange telecommunications services to subscribers in rural and high cost areas * * * be no higher than the rates charged by each such provider to its subscribers in urban areas.'' The provision further required that the rules ''require that a provider of interstate interexchange telecommunications services * * * provide such services to its subscribers in each State at rates no higher than the rates charged to its subscribers in any other State.'' The Commission has forborne from the requirements of section 254(g) with regard to private line services, of which DSL is one. Because the policies underlying section 254(g) remain important, however, we ask whether we should exercise our Title I authority to impose any similar requirements on providers of broadband Internet access services, particularly as consumers substitute broadband services and applications for narrowband services that were covered by section 254(g).

12. We recognize that the states play an important role in ensuring that public safety and consumer protection goals are met. The Commission has recently announced the creation of a federal-state task force on VoIP E911 enforcement, and we believe that this NPRM may give rise to additional areas in which cooperation between this Commission and the states can achieve the best results. We note in this regard that NARUC has recently advocated for a ''functional'' approach to questions of federal and state jurisdiction, particularly with respect to consumer protection issues. For example, with respect to CPNI, NARUC recommends that the Commission be primarily responsible for establishing rules, while state or local authorities assume responsibility for enforcing those rules. To the extent that the Commission finds it necessary to impose consumer protection and related regulations on broadband Internet access service providers, we seek comment on how best to harmonize federal regulations with the states' efforts and expertise in these areas. Do commenters support NARUC's functional approach? In what other ways can the federal and state governments cooperate in order to ensure the best results for consumers?

13. We note that consumers have various methods of pursuing complaints with the Commission against entities subject to our jurisdiction. In particular, the Commission's informal complaint process permits consumers to submit complaints to the Commission by any reasonable means, including by telephone, facsimile, postal mail, e-mail and an Internet complaint form. Consumer Center representatives, known as Consumer Advocacy and Mediation Specialists or CAMSs, are available to assist consumers in filing complaints if needed. CAMSs staff review complaints for subject matter content and determine appropriate handling of the complaints.

Initial Paperwork Reduction Act of 1995 Analysis

14. This document does not contain proposed information collection(s) subject to the Paperwork Reduction Act of 1995 (PRA), Public Law 104–13. In addition, therefore, it does not contain any new or modified ''information collection burden for small business concerns with fewer than 25 employees,'' pursuant to the Small Business Paperwork Relief Act of 2002, Public Law 107–198, *see* 44 U.S.C. 3506(c)(4).

Initial Regulatory Flexibility Analysis

15. As required by the Regulatory Flexibility Act of 1980, as amended (RFA), the Commission has prepared the present Initial Regulatory Flexibility Analysis (IRFA) of the possible significant economic impact on small entities that might result from this NPRM. Written public comments are requested on this IRFA. Comments must be identified as responses to the IRFA and must be filed by the deadlines for comments on the NPRM provided above. The Commission will send a copy of the NPRM, including this IRFA, to the Chief Counsel for Advocacy of the Small Business Administration. In addition, the NPRM and IRFA (or summaries thereof) will be published in the **Federal Register**.

Need for, and Objectives of, the Proposed Rules

16. The broadband marketplace before us today is an emerging and rapidly changing one. Nevertheless, consumer protection remains a priority for the Commission. We initiate this rulemaking to ensure that consumer protection objectives in the Act are met as the industry shifts from narrowband to broadband services. Through this NPRM, the Commission's objective is to

develop a framework for consumer protection in the broadband age—a framework that ensures that consumer protection needs are met by all providers of broadband Internet access service, regardless of the underlying technology. The NPRM seeks comment on whether the Commission should impose, for example, privacy requirements similar to the Act's CPNI requirements, slamming, truth-in-billing, network outage reporting, § 214 discontinuance, or § 254(g) rate averaging requirements on providers of broadband Internet access service. We also seek comment on how best to harmonize federal regulations with the states' efforts and expertise in consumer protection issues.

Legal Basis

17. The legal basis for any action that may be taken pursuant to the NPRM is contained in sections 1–4, 201–205, 251, 252, 254, 256, 303(r) of the Communications Act of 1934, as amended, 47 U.S.C. 151–154, 201–205, 251, 252, 254, 256, 303(r), and section 706 of the Telecommunications Act of 1996, 47 U.S.C. 157 nt.

Description and Estimate of the Number of Small Entities to Which the Proposed Rules May Apply

18. The RFA directs agencies to provide a description of and, where feasible, an estimate of the number of small entities that may be affected by the proposed rules. The RFA generally defines the term ''small entity'' as having the same meaning as the terms ''small business,'' ''small organization,'' and ''small governmental jurisdiction.'' In addition, the term ''small business'' has the same meaning as the term ''small business concern'' under the Small Business Act. A small business concern is one which: (1) Is independently owned and operated; (2) is not dominant in its field of operation; and (3) satisfies any additional criteria established by the Small Business Administration (SBA).

19. *Small Businesses.* Nationwide, there are a total of approximately 22.4 million small businesses, according to SBA data.

20. *Small Organizations.* Nationwide, there are approximately 1.6 million small organizations.

21. *Small Governmental Jurisdictions.* The term ''small governmental jurisdiction'' is defined as ''governments of cities, towns, townships, villages, school districts, or special districts, with a population of less than fifty thousand.'' As of 1997, there were approximately 87,453 governmental jurisdictions in the United States. This number includes 39,044 county governments, municipalities, and townships, of which 37,546 (approximately 96.2%) have populations of fewer than 50,000, and of which 1,498 have populations of 50,000 or more. Thus, we estimate the number of small governmental jurisdictions overall to be 84,098 or fewer.

22. We note that the list of potentially affected entities below is perhaps more expansive than is necessary. We have, for instance, included services that are apparently currently not a part of the Internet industry, as well as manufacturers.

Telecommunications Service Entities

23. *Wireline Carriers and Service Providers.* We have included small incumbent local exchange carriers in this present RFA analysis. As noted above, a ''small business'' under the RFA is one that, inter alia, meets the pertinent small business size standard (*e.g.*, a telephone communications business having 1,500 or fewer employees), and ''is not dominant in its field of operation.'' The SBA's Office of Advocacy contends that, for RFA purposes, small incumbent local exchange carriers are not dominant in their field of operation because any such dominance is not ''national'' in scope. We have therefore included small incumbent local exchange carriers in this RFA analysis, although we emphasize that this RFA action has no effect on Commission analyses and determinations in other, non-RFA contexts.

24. *Incumbent Local Exchange Carriers (LECs).* Neither the Commission nor the SBA has developed a small business size standard specifically for incumbent local exchange services. The appropriate size standard under SBA rules is for the category Wired Telecommunications Carriers. Under that size standard, such a business is small if it has 1,500 or fewer employees. According to Commission data, 1,303 carriers have reported that they are engaged in the provision of incumbent local exchange services. Of these 1,303 carriers, an estimated 1,020 have 1,500 or fewer employees and 283 have more than 1,500 employees. Consequently, the Commission estimates that most providers of incumbent local exchange service are small businesses that may be affected by our action. In addition, limited preliminary census data for 2002 indicate that the total number of wired communications carriers increased approximately 34 percent from 1997 to 2002.

25. *Competitive Local Exchange Carriers, Competitive Access Providers (CAPs), ''Shared-Tenant Service Providers,'' and ''Other Local Service Providers.''* Neither the Commission nor the SBA has developed a small business size standard specifically for these service providers. The appropriate size standard under SBA rules is for the category Wired Telecommunications Carriers. Under that size standard, such a business is small if it has 1,500 or fewer employees. According to Commission data, 769 carriers have reported that they are engaged in the provision of either competitive access provider services or competitive local exchange carrier services. Of these 769 carriers, an estimated 676 have 1,500 or fewer employees and 93 have more than 1,500 employees. In addition, 12 carriers have reported that they are ''Shared-Tenant Service Providers,'' and all 12 are estimated to have 1,500 or fewer employees. In addition, 39 carriers have reported that they are ''Other Local Service Providers.'' Of the 39, an estimated 38 have 1,500 or fewer employees and one has more than 1,500 employees. Consequently, the Commission estimates that most providers of competitive local exchange service, competitive access providers, ''Shared-Tenant Service Providers,'' and ''Other Local Service Providers'' are small entities that may be affected by our action. In addition, limited preliminary census data for 2002 indicate that the total number of wired communications carriers increased approximately 34 percent from 1997 to 2002.

26. *Local Resellers.* The SBA has developed a small business size standard for the category of Telecommunications Resellers. Under that size standard, such a business is small if it has 1,500 or fewer employees. According to Commission data, 143 carriers have reported that they are engaged in the provision of local resale services. Of these, an estimated 141 have 1,500 or fewer employees and two have more than 1,500 employees. Consequently, the Commission estimates that the majority of local resellers are small entities that may be affected by our action.

27. *Toll Resellers.* The SBA has developed a small business size standard for the category of Telecommunications Resellers. Under that size standard, such a business is small if it has 1,500 or fewer employees. According to Commission data, 770 carriers have reported that they are engaged in the provision of toll resale services. Of these, an estimated 747 have 1,500 or fewer employees and 23 have more than 1,500 employees. Consequently, the Commission

estimates that the majority of toll resellers are small entities that may be affected by our action.

28. *Payphone Service Providers (PSPs).* Neither the Commission nor the SBA has developed a small business size standard specifically for payphone services providers. The appropriate size standard under SBA rules is for the category Wired Telecommunications Carriers. Under that size standard, such a business is small if it has 1,500 or fewer employees. According to Commission data, 654 carriers have reported that they are engaged in the provision of payphone services. Of these, an estimated 652 have 1,500 or fewer employees and two have more than 1,500 employees. Consequently, the Commission estimates that the majority of payphone service providers are small entities that may be affected by our action. In addition, limited preliminary census data for 2002 indicate that the total number of wired communications carriers increased approximately 34 percent from 1997 to 2002.

29. *Interexchange Carriers (IXCs).* Neither the Commission nor the SBA has developed a small business size standard specifically for providers of interexchange services. The appropriate size standard under SBA rules is for the category Wired Telecommunications Carriers. Under that size standard, such a business is small if it has 1,500 or fewer employees. According to Commission data, 316 carriers have reported that they are engaged in the provision of interexchange service. Of these, an estimated 292 have 1,500 or fewer employees and 24 have more than 1,500 employees. Consequently, the Commission estimates that the majority of IXCs are small entities that may be affected by our action. In addition, limited preliminary census data for 2002 indicate that the total number of wired communications carriers increased approximately 34 percent from 1997 to 2002.

30. *Operator Service Providers (OSPs).* Neither the Commission nor the SBA has developed a small business size standard specifically for operator service providers. The appropriate size standard under SBA rules is for the category Wired Telecommunications Carriers. Under that size standard, such a business is small if it has 1,500 or fewer employees. According to Commission data, 23 carriers have reported that they are engaged in the provision of operator services. Of these, an estimated 20 have 1,500 or fewer employees and three have more than 1,500 employees. Consequently, the Commission estimates that the majority of OSPs are small entities that may be affected by our action. In addition, limited preliminary census data for 2002 indicate that the total number of wired communications carriers increased approximately 34 percent from 1997 to 2002.

31. *Prepaid Calling Card Providers.* Neither the Commission nor the SBA has developed a small business size standard specifically for prepaid calling card providers. The appropriate size standard under SBA rules is for the category Telecommunications Resellers. Under that size standard, such a business is small if it has 1,500 or fewer employees. According to Commission data, 89 carriers have reported that they are engaged in the provision of prepaid calling cards. Of these, 88 are estimated to have 1,500 or fewer employees and one has more than 1,500 employees. Consequently, the Commission estimates that all or the majority of prepaid calling card providers are small entities that may be affected by our action.

32. *800 and 800-Like Service Subscribers.* Neither the Commission nor the SBA has developed a small business size standard specifically for 800 and 800-like service (''toll free'') subscribers. The appropriate size standard under SBA rules is for the category Telecommunications Resellers. Under that size standard, such a business is small if it has 1,500 or fewer employees. The most reliable source of information regarding the number of these service subscribers appears to be data the Commission collects on the 800, 888, and 877 numbers in use. According to our data, at the end of January, 1999, the number of 800 numbers assigned was 7,692,955; the number of 888 numbers assigned was 7,706,393; and the number of 877 numbers assigned was 1,946,538. We do not have data specifying the number of these subscribers that are not independently owned and operated or have more than 1,500 employees, and thus are unable at this time to estimate with greater precision the number of toll free subscribers that would qualify as small businesses under the SBA size standard. Consequently, we estimate that there are 7,692,955 or fewer small entity 800 subscribers; 7,706,393 or fewer small entity 888 subscribers; and 1,946,538 or fewer small entity 877 subscribers.

33. *International Service Providers.* The Commission has not developed a small business size standard specifically for providers of international service. The appropriate size standards under SBA rules are for the two broad categories of Satellite Telecommunications and Other Telecommunications. Under both categories, such a business is small if it has $12.5 million or less in average annual receipts. For the first category of Satellite Telecommunications, Census Bureau data for 1997 show that there were a total of 324 firms that operated for the entire year. Of this total, 273 firms had annual receipts of under $10 million, and an additional 24 firms had receipts of $10 million to $24,999,999. Thus, the majority of Satellite Telecommunications firms can be considered small.

34. The second category—Other Telecommunications—includes ''establishments primarily engaged in * * * providing satellite terminal stations and associated facilities operationally connected with one or more terrestrial communications systems and capable of transmitting telecommunications to or receiving telecommunications from satellite systems.'' According to Census Bureau data for 1997, there were 439 firms in this category that operated for the entire year. Of this total, 424 firms had annual receipts of $5 million to $9,999,999 and an additional six firms had annual receipts of $10 million to $24,999,990. Thus, under this second size standard, the majority of firms can be considered small.

35. *Wireless Telecommunications Service Providers.* Below, for those services subject to auctions, we note that, as a general matter, the number of winning bidders that qualify as small businesses at the close of an auction does not necessarily represent the number of small businesses currently in service. Also, the Commission does not generally track subsequent business size unless, in the context of assignments or transfers, unjust enrichment issues are implicated.

36. *Wireless Service Providers.* The SBA has developed a small business size standard for wireless firms within the two broad economic census categories of ''Paging'' and ''Cellular and Other Wireless Telecommunications.'' Under both SBA categories, a wireless business is small if it has 1,500 or fewer employees. For the census category of Paging, Census Bureau data for 1997 show that there were 1,320 firms in this category, total, that operated for the entire year. Of this total, 1,303 firms had employment of 999 or fewer employees, and an additional 17 firms had employment of 1,000 employees or more. Thus, under this category and associated small business size standard, the majority of firms can be considered small. For the census category Cellular and Other Wireless

Telecommunications, Census Bureau data for 1997 show that there were 977 firms in this category, total, that operated for the entire year. Of this total, 965 firms had employment of 999 or fewer employees, and an additional 12 firms had employment of 1,000 employees or more. Thus, under this second category and size standard, the majority of firms can, again, be considered small. In addition, limited preliminary census data for 2002 indicate that the total number of paging providers decreased approximately 51 percent from 1997 to 2002. In addition, limited preliminary census data for 2002 indicate that the total number of cellular and other wireless telecommunications carriers increased approximately 321 percent from 1997 to 2002.

37. *Cellular Licensees.* The SBA has developed a small business size standard for wireless firms within the broad economic census category ''Cellular and Other Wireless Telecommunications.'' Under this SBA category, a wireless business is small if it has 1,500 or fewer employees. For the census category Cellular and Other Wireless Telecommunications firms, Census Bureau data for 1997 show that there were 977 firms in this category, total, that operated for the entire year. Of this total, 965 firms had employment of 999 or fewer employees, and an additional 12 firms had employment of 1,000 employees or more. Thus, under this category and size standard, the great majority of firms can be considered small. Also, according to Commission data, 437 carriers reported that they were engaged in the provision of cellular service, Personal Communications Service (PCS), or Specialized Mobile Radio (SMR) Telephony services, which are placed together in the data. We have estimated that 260 of these are small, under the SBA small business size standard.

38. *Common Carrier Paging.* The SBA has developed a small business size standard for wireless firms within the broad economic census category, ''Cellular and Other Wireless Telecommunications.'' Under this SBA category, a wireless business is small if it has 1,500 or fewer employees. For the census category of Paging, Census Bureau data for 1997 show that there were 1,320 firms in this category, total, that operated for the entire year. Of this total, 1,303 firms had employment of 999 or fewer employees, and an additional 17 firms had employment of 1,000 employees or more. Thus, under this category and associated small business size standard, the majority of firms can be considered small. In the Paging Third Report and Order, we developed a small business size standard for ''small businesses'' and ''very small businesses'' for purposes of determining their eligibility for special provisions such as bidding credits and installment payments. A ''small business'' is an entity that, together with its affiliates and controlling principals, has average gross revenues not exceeding $15 million for the preceding three years. Additionally, a ''very small business'' is an entity that, together with its affiliates and controlling principals, has average gross revenues that are not more than $3 million for the preceding three years. The SBA has approved these small business size standards. An auction of Metropolitan Economic Area licenses commenced on February 24, 2000, and closed on March 2, 2000. Of the 985 licenses auctioned, 440 were sold. Fifty-seven companies claiming small business status won. Also, according to Commission data, 375 carriers reported that they were engaged in the provision of paging and messaging services. Of those, we estimate that 370 are small, under the SBA-approved small business size standard.

39. *Wireless Communications Services.* This service can be used for fixed, mobile, radiolocation, and digital audio broadcasting satellite uses. The Commission established small business size standards for the wireless communications services (WCS) auction. A ''small business'' is an entity with average gross revenues of $40 million for each of the three preceding years, and a ''very small business'' is an entity with average gross revenues of $15 million for each of the three preceding years. The SBA has approved these small business size standards. The Commission auctioned geographic area licenses in the WCS service. In the auction, there were seven winning bidders that qualified as ''very small business'' entities, and one that qualified as a ''small business'' entity.

40. *Wireless Telephony.* Wireless telephony includes cellular, personal communications services (PCS), and specialized mobile radio (SMR) telephony carriers. As noted earlier, the SBA has developed a small business size standard for ''Cellular and Other Wireless Telecommunications'' services. Under that SBA small business size standard, a business is small if it has 1,500 or fewer employees. According to Commission data, 445 carriers reported that they were engaged in the provision of wireless telephony. We have estimated that 245 of these are small under the SBA small business size standard.

41. *Broadband Personal Communications Service.* The broadband Personal Communications Service (PCS) spectrum is divided into six frequency blocks designated A through F, and the Commission has held auctions for each block. The Commission defined ''small entity'' for Blocks C and F as an entity that has average gross revenues of $40 million or less in the three previous calendar years. For Block F, an additional classification for ''very small business'' was added and is defined as an entity that, together with its affiliates, has average gross revenues of not more than $15 million for the preceding three calendar years.'' These standards defining ''small entity'' in the context of broadband PCS auctions have been approved by the SBA. No small businesses, within the SBA-approved small business size standards bid successfully for licenses in Blocks A and B. There were 90 winning bidders that qualified as small entities in the Block C auctions. A total of 93 small and very small business bidders won approximately 40 percent of the 1,479 licenses for Blocks D, E, and F. On March 23, 1999, the Commission re-auctioned 347 C, D, E, and F Block licenses. There were 48 small business winning bidders. On January 26, 2001, the Commission completed the auction of 422 C and F Broadband PCS licenses in Auction No. 35. Of the 35 winning bidders in this auction, 29 qualified as ''small'' or '' small'' businesses. Subsequent events, concerning Auction 35, including judicial and agency determinations, resulted in a total of 163 C and F Block licenses being available for grant.

42. *Narrowband Personal Communications Services.* To date, two auctions of narrowband personal communications services (PCS) licenses have been conducted. For purposes of the two auctions that have already been held, ''small businesses'' were entities with average gross revenues for the prior three calendar years of $40 million or less. Through these auctions, the Commission has awarded a total of 41 licenses, out of which 11 were obtained by small businesses. To ensure meaningful participation of small business entities in future auctions, the Commission has adopted a two-tiered small business size standard in the Narrowband PCS Second Report and Order. A ''small business'' is an entity that, together with affiliates and controlling interests, has average gross revenues for the three preceding years of not more than $40 million. A ''very small business'' is an entity that,

together with affiliates and controlling interests, has average gross revenues for the three preceding years of not more than $15 million. The SBA has approved these small business size standards. In the future, the Commission will auction 459 licenses to serve Metropolitan Trading Areas (MTAs) and 408 response channel licenses. There is also one megahertz of narrowband PCS spectrum that has been held in reserve and that the Commission has not yet decided to release for licensing. The Commission cannot predict accurately the number of licenses that will be awarded to small entities in future auctions. However, four of the 16 winning bidders in the two previous narrowband PCS auctions were small businesses, as that term was defined. The Commission assumes, for purposes of this analysis that a large portion of the remaining narrowband PCS licenses will be awarded to small entities. The Commission also assumes that at least some small businesses will acquire narrowband PCS licenses by means of the Commission's partitioning and disaggregation rules.

43. *220 MHz Radio Service—Phase I Licensees.* The 220 MHz service has both Phase I and Phase II licenses. Phase I licensing was conducted by lotteries in 1992 and 1993. There are approximately 1,515 such non-nationwide licensees and four nationwide licensees currently authorized to operate in the 220 MHz band. The Commission has not developed a small business size standard for small entities specifically applicable to such incumbent 220 MHz Phase I licensees. To estimate the number of such licensees that are small businesses, we apply the small business size standard under the SBA rules applicable to ''Cellular and Other Wireless Telecommunications'' companies. This category provides that a small business is a wireless company employing no more than 1,500 persons. For the census category Cellular and Other Wireless Telecommunications, Census Bureau data for 1997 show that there were 977 firms in this category, total, that operated for the entire year. Of this total, 965 firms had employment of 999 or fewer employees, and an additional 12 firms had employment of 1,000 employees or more. Thus, under this second category and size standard, the majority of firms can, again, be considered small. Assuming this general ratio continues in the context of Phase I 220 MHz licensees, the Commission estimates that nearly all such licensees are small businesses under the SBA's small business size standard. In addition, limited preliminary census data for 2002 indicate that the total number of cellular and other wireless telecommunications carriers increased approximately 321 percent from 1997 to 2002.

44. *220 MHz Radio Service—Phase II Licensees.* The 220 MHz service has both Phase I and Phase II licenses. The Phase II 220 MHz service is a new service, and is subject to spectrum auctions. In the 220 MHz Third Report and Order, we adopted a small business size standard for ''small'' and ''very small'' businesses for purposes of determining their eligibility for special provisions such as bidding credits and installment payments. This small business size standard indicates that a ''small business'' is an entity that, together with its affiliates and controlling principals, has average gross revenues not exceeding $15 million for the preceding three years. A ''very small business'' is an entity that, together with its affiliates and controlling principals, has average gross revenues that do not exceed $3 million for the preceding three years. The SBA has approved these small business size standards. Auctions of Phase II licenses commenced on September 15, 1998, and closed on October 22, 1998. In the first auction, 908 licenses were auctioned in three different-sized geographic areas: Three nationwide licenses, 30 Regional Economic Area Group (EAG) Licenses, and 875 Economic Area (EA) Licenses. Of the 908 licenses auctioned, 693 were sold. Thirty-nine small businesses won licenses in the first 220 MHz auction. The second auction included 225 licenses: 216 EA licenses and 9 EAG licenses. Fourteen companies claiming small business status won 158 licenses.

45. *800 MHz and 900 MHz Specialized Mobile Radio Licenses.* The Commission awards ''small entity'' and ''very small entity'' bidding credits in auctions for Specialized Mobile Radio (SMR) geographic area licenses in the 800 MHz and 900 MHz bands to firms that had revenues of no more than $15 million in each of the three previous calendar years, or that had revenues of no more than $3 million in each of the previous calendar years, respectively. These bidding credits apply to SMR providers in the 800 MHz and 900 MHz bands that either hold geographic area licenses or have obtained extended implementation authorizations. The Commission does not know how many firms provide 800 MHz or 900 MHz geographic area SMR service pursuant to extended implementation authorizations, nor how many of these providers have annual revenues of no more than $15 million. One firm has over $15 million in revenues. The Commission assumes, for purposes here, that all of the remaining existing extended implementation authorizations are held by small entities, as that term is defined by the SBA. The Commission has held auctions for geographic area licenses in the 800 MHz and 900 MHz SMR bands. There were 60 winning bidders that qualified as small or very small entities in the 900 MHz SMR auctions. Of the 1,020 licenses won in the 900 MHz auction, bidders qualifying as small or very small entities won 263 licenses. In the 800 MHz auction, 38 of the 524 licenses won were won by small and very small entities.

46. *700 MHz Guard Band Licensees.* In the 700 MHz Guard Band Order, we adopted a small business size standard for ''small businesses'' and ''very small businesses'' for purposes of determining their eligibility for special provisions such as bidding credits and installment payments. A ''small business'' as an entity that, together with its affiliates and controlling principals, has average gross revenues not exceeding $15 million for the preceding three years. Additionally, a ''very small business'' is an entity that, together with its affiliates and controlling principals, has average gross revenues that are not more than $3 million for the preceding three years. An auction of 52 Major Economic Area (MEA) licenses commenced on September 6, 2000, and closed on September 21, 2000. Of the 104 licenses auctioned, 96 licenses were sold to nine bidders. Five of these bidders were small businesses that won a total of 26 licenses. A second auction of 700 MHz Guard Band licenses commenced on February 13, 2001 and closed on February 21, 2001. All eight of the licenses auctioned were sold to three bidders. One of these bidders was a small business that won a total of two licenses.

47. *Rural Radiotelephone Service.* The Commission has not adopted a size standard for small businesses specific to the Rural Radiotelephone Service. A significant subset of the Rural Radiotelephone Service is the Basic Exchange Telephone Radio System (BETRS). The Commission uses the SBA's small business size standard applicable to ''Cellular and Other Wireless Telecommunications,'' *i.e.*, an entity employing no more than 1,500 persons. There are approximately 1,000 licensees in the Rural Radiotelephone Service, and the Commission estimates that there are 1,000 or fewer small entity licensees in the Rural Radiotelephone Service that may be affected by the rules and policies adopted herein.

48. *Air-Ground Radiotelephone Service.* The Commission has not adopted a small business size standard specific to the Air-Ground Radiotelephone Service. We will use SBA's small business size standard applicable to ''Cellular and Other Wireless Telecommunications,'' *i.e.*, an entity employing no more than 1,500 persons. There are approximately 100 licensees in the Air-Ground Radiotelephone Service, and we estimate that almost all of them qualify as small under the SBA small business size standard.

49. *Aviation and Marine Radio Services.* Small businesses in the aviation and marine radio services use a very high frequency (VHF) marine or aircraft radio and, as appropriate, an emergency position-indicating radio beacon (and/or radar) or an emergency locator transmitter. The Commission has not developed a small business size standard specifically applicable to these small businesses. For purposes of this analysis, the Commission uses the SBA small business size standard for the category ''Cellular and Other Telecommunications,'' which is 1,500 or fewer employees. Most applicants for recreational licenses are individuals. Approximately 581,000 ship station licensees and 131,000 aircraft station licensees operate domestically and are not subject to the radio carriage requirements of any statute or treaty. For purposes of our evaluations in this analysis, we estimate that there are up to approximately 712,000 licensees that are small businesses (or individuals) under the SBA standard. In addition, between December 3, 1998 and December 14, 1998, the Commission held an auction of 42 VHF Public Coast licenses in the 157.1875–157.4500 MHz (ship transmit) and 161.775–162.0125 MHz (coast transmit) bands. For purposes of the auction, the Commission defined a ''small'' business as an entity that, together with controlling interests and affiliates, has average gross revenues for the preceding three years not to exceed $15 million dollars. In addition, a ''very small'' business is one that, together with controlling interests and affiliates, has average gross revenues for the preceding three years not to exceed $3 million dollars. There are approximately 10,672 licensees in the Marine Coast Service, and the Commission estimates that almost all of them qualify as ''small'' businesses under the above special small business size standards.

50. *Fixed Microwave Services.* Fixed microwave services include common carrier, private operational-fixed, and broadcast auxiliary radio services. At present, there are approximately 22,015 common carrier fixed licensees and 61,670 private operational-fixed licensees and broadcast auxiliary radio licensees in the microwave services. The Commission has not created a size standard for a small business specifically with respect to fixed microwave services. For purposes of this analysis, the Commission uses the SBA small business size standard for the category ''Cellular and Other Telecommunications,'' which is 1,500 or fewer employees. The Commission does not have data specifying the number of these licensees that have more than 1,500 employees, and thus is unable at this time to estimate with greater precision the number of fixed microwave service licensees that would qualify as small business concerns under the SBA's small business size standard. Consequently, the Commission estimates that there are up to 22,015 common carrier fixed licensees and up to 61,670 private operational-fixed licensees and broadcast auxiliary radio licensees in the microwave services that may be small and may be affected by the rules and policies adopted herein. We noted, however, that the common carrier microwave fixed licensee category includes some large entities.

51. *Offshore Radiotelephone Service.* This service operates on several UHF television broadcast channels that are not used for television broadcasting in the coastal areas of states bordering the Gulf of Mexico. There are presently approximately 55 licensees in this service. We are unable to estimate at this time the number of licensees that would qualify as small under the SBA's small business size standard for ''Cellular and Other Wireless Telecommunications'' services. Under that SBA small business size standard, a business is small if it has 1,500 or fewer employees.

52. *39 GHz Service.* The Commission created a special small business size standard for 39 GHz licenses—an entity that has average gross revenues of $40 million or less in the three previous calendar years. An additional size standard for ''very small business'' is: an entity that, together with affiliates, has average gross revenues of not more than $15 million for the preceding three calendar years. The SBA has approved these small business size standards. The auction of the 2,173 39 GHz licenses began on April 12, 2000 and closed on May 8, 2000. The 18 bidders who claimed small business status won 849 licenses. Consequently, the Commission estimates that 18 or fewer 39 GHz licensees are small entities that may be affected by the rules and polices adopted herein.

53. *Broadband Radio Service and Educational Broadband Service.* Broadband Radio Service comprises Multichannel Multipoint Distribution Service (MMDS) systems and Multipoint Distribution Service (MDS). MMDS systems, often referred to as ''wireless cable,'' transmit video programming to subscribers using the microwave frequencies of MDS and Educational Broadband Service (formerly known as Instructional Television Fixed Service). In connection with the 1996 MDS auction, the Commission established a small business size standard as an entity that had annual average gross revenues of less than $40 million in the previous three calendar years. The MDS auctions resulted in 67 successful bidders obtaining licensing opportunities for 493 Basic Trading Areas (BTAs). Of the 67 auction winners, 61 met the definition of a small business. MDS also includes licensees of stations authorized prior to the auction. In addition, the SBA has developed a small business size standard for Cable and Other Program Distribution, which includes all such companies generating $12.5 million or less in annual receipts. According to Census Bureau data for 1997, there were a total of 1,311 firms in this category, total, that had operated for the entire year. Of this total, 1,180 firms had annual receipts of under $10 million and an additional 52 firms had receipts of $10 million or more but less than $25 million. Consequently, we estimate that the majority of providers in the Broadband Radio Service category are small businesses that may be affected by the rules and policies adopted herein. This SBA small business size standard also appears applicable to Educational Broadband Service. There are presently 2,032 Educational Broadband Service licensees. All but 100 of these licenses are held by educational institutions. Educational institutions are included in this analysis as small entities. Thus, we tentatively conclude that at least 1,932 licensees are small businesses.

54. *Local Multipoint Distribution Service.* Local Multipoint Distribution Service (LMDS) is a fixed broadband point-to-multipoint microwave service that provides for two-way video telecommunications. The auction of the 1,030 Local Multipoint Distribution Service (LMDS) licenses began on February 18, 1998 and closed on March 25, 1998. The Commission established a small business size standard for LMDS licenses as an entity that has average gross revenues of less than $40 million

in the three previous calendar years. An additional small business size standard for ''very small business'' was added as an entity that, together with its affiliates, has average gross revenues of not more than $15 million for the preceding three calendar years. The SBA has approved these small business size standards in the context of LMDS auctions. There were 93 winning bidders that qualified as small entities in the LMDS auctions. A total of 93 small and very small business bidders won approximately 277 A Block licenses and 387 B Block licenses. On March 27, 1999, the Commission re-auctioned 161 licenses; there were 40 winning bidders. Based on this information, we conclude that the number of small LMDS licenses consists of the 93 winning bidders in the first auction and the 40 winning bidders in the re-auction, for a total of 133 small entity LMDS providers.

55. *218–219 MHz Service.* The first auction of 218–219 MHz spectrum resulted in 170 entities winning licenses for 594 Metropolitan Statistical Area (MSA) licenses. Of the 594 licenses, 557 were won by entities qualifying as a small business. For that auction, the small business size standard was an entity that, together with its affiliates, has no more than a $6 million net worth and, after federal income taxes (excluding any carry over losses), has no more than $2 million in annual profits each year for the previous two years. In the 218–219 MHz Report and Order and Memorandum Opinion and Order, we established a small business size standard for a ''small business'' as an entity that, together with its affiliates and persons or entities that hold interests in such an entity and their affiliates, has average annual gross revenues not to exceed $15 million for the preceding three years. A ''very small business'' is defined as an entity that, together with its affiliates and persons or entities that hold interests in such an entity and its affiliates, has average annual gross revenues not to exceed $3 million for the preceding three years. We cannot estimate, however, the number of licenses that will be won by entities qualifying as small or very small businesses under our rules in future auctions of 218–219 MHz spectrum.

56. *24 GHz—Incumbent Licensees.* This analysis may affect incumbent licensees who were relocated to the 24 GHz band from the 18 GHz band, and applicants who wish to provide services in the 24 GHz band. The applicable SBA small business size standard is that of ''Cellular and Other Wireless Telecommunications'' companies. This category provides that such a company is small if it employs no more than 1,500 persons. According to Census Bureau data for 1997, there were 977 firms in this category, total, that operated for the entire year. Of this total, 965 firms had employment of 999 or fewer employees, and an additional 12 firms had employment of 1,000 employees or more. Thus, under this size standard, the great majority of firms can be considered small. These broader census data notwithstanding, we believe that there are only two licensees in the 24 GHz band that were relocated from the 18 GHz band, Teligent and TRW, Inc. It is our understanding that Teligent and its related companies have less than 1,500 employees, though this may change in the future. TRW is not a small entity. Thus, only one incumbent licensee in the 24 GHz band is a small business entity.

57. *24 GHz—Future Licensees.* With respect to new applicants in the 24 GHz band, the small business size standard for ''small business'' is an entity that, together with controlling interests and affiliates, has average annual gross revenues for the three preceding years not in excess of $15 million. ''Very small business'' in the 24 GHz band is an entity that, together with controlling interests and affiliates, has average gross revenues not exceeding $3 million for the preceding three years. The SBA has approved these small business size standards. These size standards will apply to the future auction, if held.

58. *Cable and OVS Operators: Cable and Other Program Distribution.* This category includes cable systems operators, closed circuit television services, direct broadcast satellite services, multipoint distribution systems, satellite master antenna systems, and subscription television services. The SBA has developed small business size standard for this census category, which includes all such companies generating $12.5 million or less in revenue annually. According to Census Bureau data for 1997, there were a total of 1,311 firms in this category, total, that had operated for the entire year. Of this total, 1,180 firms had annual receipts of under $10 million and an additional 52 firms had receipts of $10 million or more but less than $25 million. Consequently, the Commission estimates that the majority of providers in this service category are small businesses that may be affected by the rules and policies adopted herein.

59. *Cable System Operators (Rate Regulation Standard).* The Commission has developed its own small business size standard for cable system operators, for purposes of rate regulation. Under the Commission's rules, a ''small cable company'' is one serving fewer than 400,000 subscribers nationwide. The most recent estimates indicate that there were 1,439 cable operators who qualified as small cable system operators at the end of 1995. Since then, some of those companies may have grown to serve over 400,000 subscribers, and others may have been involved in transactions that caused them to be combined with other cable operators. Consequently, the Commission estimates that there are now fewer than 1,439 small entity cable system operators that may be affected by the rules and policies adopted herein.

60. *Cable System Operators (Telecom Act Standard).* The Communications Act of 1934, as amended, also contains a size standard for small cable system operators, which is ''a cable operator that, directly or through an affiliate, serves in the aggregate fewer than 1 percent of all subscribers in the United States and is not affiliated with any entity or entities whose gross annual revenues in the aggregate exceed $250,000,000.'' The Commission has determined that there are 67,700,000 subscribers in the United States. Therefore, an operator serving fewer than 677,000 subscribers shall be deemed a small operator, if its annual revenues, when combined with the total annual revenues of all its affiliates, do not exceed $250 million in the aggregate. Based on available data, the Commission estimates that the number of cable operators serving 677,000 subscribers or fewer, totals 1,450. The Commission neither requests nor collects information on whether cable system operators are affiliated with entities whose gross annual revenues exceed $250 million, and therefore are unable, at this time, to estimate more accurately the number of cable system operators that would qualify as small cable operators under the size standard contained in the Communications Act of 1934.

61. *Open Video Services.* Open Video Service (OVS) systems provide subscription services. The SBA has created a small business size standard for Cable and Other Program Distribution. This standard provides that a small entity is one with $12.5 million or less in annual receipts. The Commission has certified approximately 25 OVS operators to serve 75 areas, and some of these are currently providing service. Affiliates of Residential Communications Network, Inc. (RCN) received approval to operate OVS systems in New York City, Boston, Washington, DC, and other areas. RCN has sufficient revenues to assure that they do not qualify as a small business entity. Little financial information is

available for the other entities that are authorized to provide OVS and are not yet operational. Given that some entities authorized to provide OVS service have not yet begun to generate revenues, the Commission concludes that up to 24 OVS operators (those remaining) might qualify as small businesses that may be affected by the rules and policies adopted herein.

62. *Internet Service Providers.* The SBA has developed a small business size standard for Internet Service Providers (ISPs). ISPs ''provide clients access to the Internet and generally provide related services such as Web hosting, Web page designing, and hardware or software consulting related to Internet connectivity.'' Under the SBA size standard, such a business is small if it has average annual receipts of $21 million or less. According to Census Bureau data for 1997, there were 2,751 firms in this category that operated for the entire year. Of these, 2,659 firms had annual receipts of under $10 million, and an additional 67 firms had receipts of between $10 million and $24, 999,999. Consequently, we estimate that the majority of these firms are small entities that may be affected by our action. In addition, limited preliminary census data for 2002 indicate that the total number of Internet service providers increased approximately five percent from 1997 to 2002.

63. *Other Internet-Related Entities: Web Search Portals.* Our action pertains to VoIP services, which could be provided by entities that provide other services such as e-mail, online gaming, Web browsing, video conferencing, instant messaging, and other, similar IP-enabled services. The Commission has not adopted a size standard for entities that create or provide these types of services or applications. However, the census bureau has identified firms that ''operate Web sites that use a search engine to generate and maintain extensive databases of Internet addresses and content in an easily searchable format. Web search portals often provide additional Internet services, such as e-mail, connections to other Web sites, auctions, news, and other limited content, and serve as a home base for Internet users.'' The SBA has developed a small business size standard for this category; that size standard is $6 million or less in average annual receipts. According to Census Bureau data for 1997, there were 195 firms in this category that operated for the entire year. Of these, 172 had annual receipts of under $5 million, and an additional nine firms had receipts of between $5 million and $9,999,999. Consequently, we estimate that the majority of these firms are small entities that may be affected by our action.

64. *Data Processing, Hosting, and Related Services.* Entities in this category ''primarily * * * provid[e] infrastructure for hosting or data processing services.'' The SBA has developed a small business size standard for this category; that size standard is $21 million or less in average annual receipts. According to Census Bureau data for 1997, there were 3,700 firms in this category that operated for the entire year. Of these, 3,477 had annual receipts of under $10 million, and an additional 108 firms had receipts of between $10 million and $24,999,999. Consequently, we estimate that the majority of these firms are small entities that may be affected by our action.

65. *All Other Information Services.* This industry comprises establishments primarily engaged in providing other information services (except new syndicates and libraries and archives). Our action pertains to VoIP services, which could be provided by entities that provide other services such as e-mail, online gaming, Web browsing, video conferencing, instant messaging, and other, similar IP-enabled services. The SBA has developed a small business size standard for this category; that size standard is $6 million or less in average annual receipts. According to Census Bureau data for 1997, there were 195 firms in this category that operated for the entire year. Of these, 172 had annual receipts of under $5 million, and an additional nine firms had receipts of between $5 million and $9,999,999. Consequently, we estimate that the majority of these firms are small entities that may be affected by our action.

66. *Internet Publishing and Broadcasting.* This industry comprises establishments engaged in publishing and/or broadcasting content on the Internet exclusively. These establishments do not provide traditional (non-Internet) versions of the content that they publish or broadcast. The SBA has developed a small business size standard for this new (2002) census category; that size standard is 500 or fewer employees. To assess the prevalence of small entities in this category, we will use 1997 Census Bureau data for a relevant, now-superseded census category, ''All Other Information Services.'' The SBA small business size standard for that prior category was $6 million or less in average annual receipts. According to Census Bureau data for 1997, there were 195 firms in the prior category that operated for the entire year. Of these, 172 had annual receipts of under $5 million, and an additional nine firms had receipts of between $5 million and $9,999,999. Consequently, we estimate that the majority of the firms in this current category are small entities that may be affected by our action.

67. *Software Publishers.* These companies may design, develop or publish software and may provide other support services to software purchasers, such as providing documentation or assisting in installation. The companies may also design software to meet the needs of specific users. The SBA has developed a small business size standard of $21 million or less in average annual receipts for all of the following pertinent categories: Software Publishers, Custom Computer Programming Services, and Other Computer Related Services. For Software Publishers, Census Bureau data for 1997 indicate that there were 8,188 firms in the category that operated for the entire year. Of these, 7,633 had annual receipts under $10 million, and an additional 289 firms had receipts of between $10 million and $24, 999,999. For providers of Custom Computer Programming Services, the Census Bureau data indicate that there were 19,334 firms that operated for the entire year. Of these, 18,786 had annual receipts of under $10 million, and an additional 352 firms had receipts of between $10 million and $24,999,999. For providers of Other Computer Related Services, the Census Bureau data indicate that there were 5,524 firms that operated for the entire year. Of these, 5,484 had annual receipts of under $10 million, and an additional 28 firms had receipts of between $10 million and $24,999,999. Consequently, we estimate that the majority of the firms in each of these three categories are small entities that may be affected by our action.

68. *Equipment Manufacturers.* The equipment manufacturers described in this section are apparently merely indirectly affected by our current action, and therefore would not formally be a part of this RFA analysis. We have included them, however, to broaden the record in this proceeding and to alert them to our decisions.

69. *Wireless Communications Equipment Manufacturers.* The SBA has established a small business size standard for Radio and Television Broadcasting and Wireless Communications Equipment Manufacturing. Examples of products in this category include ''transmitting and receiving antennas, cable television equipment, GPS equipment, pagers, cellular phones, mobile communications equipment, and radio

and television studio and broadcasting equipment'' and may include other devices that transmit and receive IP-enabled services, such as personal digital assistants (PDAs). Under the SBA size standard, firms are considered small if they have 750 or fewer employees. According to Census Bureau data for 1997, there were 1,215 establishments in this category that operated for the entire year. Of those, there were 1,150 that had employment of under 500, and an additional 37 that had employment of 500 to 999. The percentage of wireless equipment manufacturers in this category was approximately 61.35%, so we estimate that the number of wireless equipment manufacturers with employment of under 500 was actually closer to 706, with an additional 23 establishments having employment of between 500 and 999. Consequently, we estimate that the majority of wireless communications equipment manufacturers are small entities that may be affected by our action.

70. *Telephone Apparatus Manufacturing.* This category ''comprises establishments primarily engaged primarily in manufacturing wire telephone and data communications equipment.'' Examples of pertinent products are ''central office switching equipment, cordless telephones (except cellular), PBX equipment, telephones, telephone answering machines, and data communications equipment, such as bridges, routers, and gateways.'' The SBA has developed a small business size standard for this category of manufacturing; that size standard is 1,000 or fewer employees. According to Census Bureau data for 1997, there were 598 establishments in this category that operated for the entire year. Of these, 574 had employment of under 1,000, and an additional 17 establishments had employment of 1,000 to 2,499. Consequently, we estimate that the majority of these establishments are small entities that may be affected by our action.

71. *Electronic Computer Manufacturing.* This category ''comprises establishments primarily engaged in manufacturing and/or assembling electronic computers, such as mainframes, personal computers, workstations, laptops, and computer servers.'' The SBA has developed a small business size standard for this category of manufacturing; that size standard is 1,000 or fewer employees. According to Census Bureau data for 1997, there were 563 establishments in this category that operated for the entire year. Of these, 544 had employment of under 1,000, and an additional 11 establishments had employment of 1,000 to 2,499. Consequently, we estimate that the majority of these establishments are small entities that may be affected by our action.

72. *Computer Terminal Manufacturing.* ''Computer terminals are input/output devices that connect with a central computer for processing.'' The SBA has developed a small business size standard for this category of manufacturing; that size standard is 1,000 or fewer employees. According to Census Bureau data for 1997, there were 142 establishments in this category that operated for the entire year, and all of the establishments had employment of under 1,000. Consequently, we estimate that the majority or all of these establishments are small entities that may be affected by our action.

73. *Other Computer Peripheral Equipment Manufacturing.* Examples of peripheral equipment in this category include keyboards, mouse devices, monitors, and scanners. The SBA has developed a small business size standard for this category of manufacturing; that size standard is 1,000 or fewer employees. According to Census Bureau data for 1997, there were 1061 establishments in this category that operated for the entire year. Of these, 1,046 had employment of under 1,000, and an additional six establishments had employment of 1,000 to 2,499. Consequently, we estimate that the majority of these establishments are small entities that may be affected by our action.

74. *Fiber Optic Cable Manufacturing.* These establishments manufacture ''insulated fiber-optic cable from purchased fiber-optic strand.'' The SBA has developed a small business size standard for this category of manufacturing; that size standard is 1,000 or fewer employees. According to Census Bureau data for 1997, there were 38 establishments in this category that operated for the entire year. Of these, 37 had employment of under 1,000, and one establishment had employment of 1,000 to 2,499. Consequently, we estimate that the majority of these establishments are small entities that may be affected by our action.

75. *Other Communication and Energy Wire Manufacturing.* These establishments manufacture ''insulated wire and cable of nonferrous metals from purchased wire.'' The SBA has developed a small business size standard for this category of manufacturing; that size standard is 1,000 or fewer employees. According to Census Bureau data for 1997, there were 275 establishments in this category that operated for the entire year. Of these, 271 had employment of under 1,000, and four establishments had employment of 1,000 to 2,499. Consequently, we estimate that the majority or all of these establishments are small entities that may be affected by our action.

76. *Audio and Video Equipment Manufacturing.* These establishments manufacture ''electronic audio and video equipment for home entertainment, motor vehicle, public address and musical instrument amplifications.'' The SBA has developed a small business size standard for this category of manufacturing; that size standard is 750 or fewer employees. According to Census Bureau data for 1997, there were 554 establishments in this category that operated for the entire year. Of these, 542 had employment of under 500, and nine establishments had employment of 500 to 999. Consequently, we estimate that the majority of these establishments are small entities that may be affected by our action.

77. *Electron Tube Manufacturing.* These establishments are ''primarily engaged in manufacturing electron tubes and parts (except glass blanks).'' The SBA has developed a small business size standard for this category of manufacturing; that size standard is 750 or fewer employees. According to Census Bureau data for 1997, there were 158 establishments in this category that operated for the entire year. Of these, 148 had employment of under 500, and three establishments had employment of 500 to 999. Consequently, we estimate that the majority of these establishments are small entities that may be affected by our action.

78. *Bare Printed Circuit Board Manufacturing.* These establishments are ''primarily engaged in manufacturing bare (*i.e.*, rigid or flexible) printed circuit boards without mounted electronic components.'' The SBA has developed a small business size standard for this category of manufacturing; that size standard is 500 or fewer employees. According to Census Bureau data for 1997, there were 1,389 establishments in this category that operated for the entire year. Of these, 1,369 had employment of under 500, and 16 establishments had employment of 500 to 999. Consequently, we estimate that the majority of these establishments are small entities that may be affected by our action.

79. *Semiconductor and Related Device Manufacturing.* These establishments manufacture ''computer storage devices that allow the storage

and retrieval of data from a phase change, magnetic, optical, or magnetic/optical media.'' The SBA has developed a small business size standard for this category of manufacturing; that size standard is 500 or fewer employees. According to Census Bureau data for 1997, there were 1,082 establishments in this category that operated for the entire year. Of these, 987 had employment of under 500, and 52 establishments had employment of 500 to 999.

80. *Electronic Capacitor Manufacturing.* These establishments manufacture ''electronic fixed and variable capacitors and condensers.'' The SBA has developed a small business size standard for this category of manufacturing; that size standard is 500 or fewer employees. According to Census Bureau data for 1997, there were 128 establishments in this category that operated for the entire year. Of these, 121 had employment of under 500, and four establishments had employment of 500 to 999.

81. *Electronic Resistor Manufacturing.* These establishments manufacture ''electronic resistors, such as fixed and variable resistors, resistor networks, thermistors, and varistors.'' The SBA has developed a small business size standard for this category of manufacturing; that size standard is 500 or fewer employees. According to Census Bureau data for 1997, there were 118 establishments in this category that operated for the entire year. Of these, 113 had employment of under 500, and 5 establishments had employment of 500 to 999.

82. *Electronic Coil, Transformer, and Other Inductor Manufacturing.* These establishments manufacture ''electronic inductors, such as coils and transformers.'' The SBA has developed a small business size standard for this category of manufacturing; that size standard is 500 or fewer employees. According to Census Bureau data for 1997, there were 448 establishments in this category that operated for the entire year. Of these, 446 had employment of under 500, and two establishments had employment of 500 to 999.

83. *Electronic Connector Manufacturing.* These establishments manufacture ''electronic connectors, such as coaxial, cylindrical, rack and panel, pin and sleeve, printed circuit and fiber optic.'' The SBA has developed a small business size standard for this category of manufacturing; that size standard is 500 or fewer employees. According to Census Bureau data for 1997, there were 347 establishments in this category that operated for the entire year. Of these, 332 had employment of under 500, and 12 establishments had employment of 500 to 999.

84. *Printed Circuit Assembly (Electronic Assembly) Manufacturing.* These are establishments ''primarily engaged in loading components onto printed circuit boards or who manufacture and ship loaded printed circuit boards.'' The SBA has developed a small business size standard for this category of manufacturing; that size standard is 500 or fewer employees. According to Census Bureau data for 1997, there were 714 establishments in this category that operated for the entire year. Of these, 673 had employment of under 500, and 24 establishments had employment of 500 to 999.

85. *Other Electronic Component Manufacturing.* These are establishments ''primarily engaged in loading components onto printed circuit boards or who manufacture and ship loaded printed circuit boards.'' The SBA has developed a small business size standard for this category of manufacturing; that size standard is 500 or fewer employees. According to Census Bureau data for 1997, there were 1,835 establishments in this category that operated for the entire year. Of these, 1,814 had employment of under 500, and 18 establishments had employment of 500 to 999.

86. *Computer Storage Device Manufacturing.* These establishments manufacture ''computer storage devices that allow the storage and retrieval of data from a phase change, magnetic, optical, or magnetic/optical media.'' The SBA has developed a small business size standard for this category of manufacturing; that size standard is 1,000 or fewer employees. According to Census Bureau data for 1997, there were 209 establishments in this category that operated for the entire year. Of these, 197 had employment of under 500, and eight establishments had employment of 500 to 999

Description of Projected Reporting, Recordkeeping and Other Compliance Requirements

87. Should the Commission decide to adopt any regulations to ensure that consumer protection needs are met by all providers of broadband Internet access service, the associated rules potentially could modify the reporting and recordkeeping requirements of certain broadband Internet access services providers. We could, for instance, require that broadband Internet access service providers must comply with slamming, truth-in-billing-type protections, or network outage reporting requirements. These proposals may impose additional reporting or recordkeeping requirements on entities. We seek comment on the possible burden these requirements would place on small entities. Also, we seek comment on whether a special approach toward any possible compliance burdens on small entities might be appropriate. Entities, especially small businesses, are encouraged to quantify the costs and benefits of any reporting requirement that may be established in this proceeding.

Steps Taken To Minimize Significant Economic Impact on Small Entities, and Significant Alternatives Considered

88. The RFA requires an agency to describe any significant alternatives that it has considered in reaching its proposed approach, which may include (among others) the following four alternatives: (1) The establishment of differing compliance or reporting requirements or timetables that take into account the resources available to small entities; (2) the clarification, consolidation, or simplification of compliance or reporting requirements under the rule for small entities; (3) the use of performance, rather than design, standards; and (4) an exemption from coverage of the rule, or any part thereof, for small entities.

89. The Commission's primary objective is to develop a framework for consumer protection in the broadband era—a framework that ensures that consumer protection needs are met by all providers of broadband Internet access service, regardless of the underlying technology. We seek comment here on the effect the various proposals described in the NPRM, and summarized below, will have on small entities, and on what effect alternative rules would have on those entities. We invite comment on ways in which the Commission can achieve its goal of protecting consumers while at the same time impose minimal burdens on small broadband Internet access service providers. With respect to any of our consumer protection regulations already in place, has the Commission adopted any provisions for small entities that we should similarly consider here?

90. *CPNI.* In this NPRM, the Commission asks whether it should extend privacy requirements similar to the Act's CPNI requirements to providers of broadband Internet access services. We ask, for example, whether we should forbid broadband Internet access providers from disclosing, without their customers' approval, information about their customers that they learn through the provision of their broadband Internet access service. By

developing the record with respect to privacy concerns, the Commission can appropriately determine whether providers of broadband Internet access services, including small entities, should be subject to similar privacy regulations.

91. *Slamming.* We seek comment on whether we should impose slamming requirements on providers of broadband Internet access service and to explain in what circumstances subscribers to broadband Internet access could get ''slammed.'' We also ask whether the provisioning process for broadband Internet access service is such that an unauthorized change in provider is more likely in situations where the provider relies on third-party broadband transmission facilities. We recognize that small broadband Internet access service providers may rely more on third-party broadband transmission facilities and could potentially inform the Commission as to whether slamming is likely to occur in those situations.

92. *Truth-in-Billing.* We invite comment on whether we should impose requirements on broadband Internet access service providers that are similar to our truth-in-billing requirements or are otherwise geared toward reducing slamming, cramming, or other types of telecommunications-related fraud. We ask parties to explain what problems customers of broadband Internet access service are likely to have with their bills and whether we should address these problems through truth-in-billing-type requirements. What effect will this proposal have on small entities, and are there alternatives to imposing truth-in-billing type regulations?

93. *Network Outage Reporting.* We seek comment as to whether broadband Internet access service providers should notify the Commission of outages of thirty or more minutes that affect a substantial number of customers or involve major airports, major military installations, key government facilities, nuclear power plants, or 911 facilities. We encourage small entities to identify any alternatives that would protect consumers while at the same time minimizing any burden on small broadband Internet access providers.

94. *Section 214 Discontinuance.* In the NPRM, the Commission stated that section 214 of the Act limits a telecommunications carrier's ability to discontinue unilaterally its service to customers. The Commission's implementing rules generally require that domestic carriers wishing to ''discontinue, reduce, or impair'' services must first request authority to do so from the Commission and must notify affected customers and others of their plans. We ask whether the Commission should impose discontinuance-type requirements on providers of broadband Internet access service.

95. *Section 254(g) Rate Averaging Requirements.* In the NPRM, the Commission explains that section 254(g) required the Commission to adopt rules ''to require that the rates charged by providers of interexchange telecommunications services to subscribers in rural and high cost areas * * * be no higher than the rates charged by each such provider to its subscribers in urban areas.'' We ask, for example, whether we should adopt similar rate averaging requirements on providers of broadband Internet access services, particularly as consumers substitute broadband services and applications for narrowband services that were covered by section 254(g).

96. In the NPRM, we ask commenters to address whether the imposition of regulations pursuant to our ancillary jurisdiction, and the corresponding ability of consumers to take advantage of Commission avenues for resolution of consumer protection issues, is desirable and necessary as a matter of public policy, or whether we should rely on market forces to address some or all of the areas listed. The option of relying on market forces may benefit entities, especially small entities, who may find it costly or burdensome to comply with Commission regulations. We also ask whether these types of regulations are more or less relevant in the context of broadband Internet access service than they are for traditional telephony services. In addition, we ask commenters to describe any technical, economic, or other impediments that may affect the ability of broadband Internet access service providers to comply with such regulations. We also ask whether there are areas of consumer protection not listed above for which the Commission should impose regulations.

97. *Federal and State Involvement.* To the extent that the Commission finds it necessary to impose consumer protection and related regulations on broadband Internet access service providers, we also seek comment on how best to harmonize federal regulations with the states' efforts and expertise in these areas.

Federal Rules That May Duplicate, Overlap, or Conflict With the Proposed Rules

98. None.

Ordering Clauses

99. Accordingly, *it is ordered that*, pursuant to sections 1–4, 10, 201–205, 214, 222, 225, 251, 252, 254–256, 258, 303(r) of the Communications Act of 1934, as amended, 47 U.S.C. 151–154, 160, 201–205, 214, 222, 225, 251, 252, 254–256, 258, 303(r), and section 706 of the Telecommunications Act of 1996, 47 U.S.C. 157 nt, the Report and Order and Notice of Proposed Rulemaking are adopted.

100. *It is further ordered that* the Commission's Consumer and Governmental Affairs Bureau, Reference Information Center, shall send a copy of this Notice of Proposed Rulemaking, including the Initial Regulatory Flexibility Analysis, to the Chief Counsel for Advocacy of the Small Business Administration.

Federal Communications Commission.

Marlene H. Dortch,

Secretary.

[FR Doc. 05–20831 Filed 10–14–05; 8:45 am]

BILLING CODE 6712–01–P

Notices

Federal Register

Vol. 70, No. 199

Monday, October 17, 2005

This section of the FEDERAL REGISTER contains documents other than rules or proposed rules that are applicable to the public. Notices of hearings and investigations, committee meetings, agency decisions and rulings, delegations of authority, filing of petitions and applications and agency statements of organization and functions are examples of documents appearing in this section.

DEPARTMENT OF AGRICULTURE

Office of the Secretary

Provincial Advisory Committees

AGENCY: Office of the Secretary, USDA.

ACTION: Notice of intent to renew Federal Advisory Committee.

SUMMARY: The Department of Agriculture, in consultation with the Department of the Interior, intends to renew the Provincial Advisory Committees (PACs) for the 12 provinces in California, Oregon, and Washington. This renewal is necessary and in the public interest due to the continued need for the PACs to provide advice on coordinating the implementation of the Record of Decision of April 13, 1994, for Management of Habitat for Late-Successional and Old-Growth Forest Related Species Within the Range of the Northern Spotted Owl. The PACs also provide advice and recommendations to promote integration and coordination of forest management activities between Federal and non-Federal entities.

ADDRESSES: Copies of the April 13, 1994, Record of Decision can be obtained electronically at *http://www.reo.gov/library/reports/newsandga.pdf*. Paper copies can be obtained from the Office of Strategic Planning, P.O. Box 3623, Portland, OR 97208.

FOR FURTHER INFORMATION CONTACT: Geraldine Bower, Planning Specialist, Ecosystem Management Coordination Staff, Forest Service, USDA (202) 205–1022.

SUPPLEMENTARY INFORMATION: Pursuant to the Federal Advisory Committee Act (5 U.S.C. App. II), notice is hereby given that the Department of Agriculture, in consultation with the Department of the Interior, intends to renew the Provincial Advisory Committees (PACs), which will advise the Provincial Interagency Executive Committee (PIEC). The purpose of the PIEC is to facilitate the coordinated implementation of the Record of Decision (ROD) of April 13, 1994, for Management of Habitat for Late-Successional and Old-Growth Forest Related Species Within the Range of the Northern Spotted Owl. The PIEC consists of representatives of the following Federal agencies: Forest Service, Natural Resources Conservation Service, Bureau of Indian Affairs, Bureau of Land Management, National Marine Fisheries Service, National Park Service, Fish and Wildlife Service, Geological Survey Biological Resources Division, Environmental Protection Agency, and U.S. Army Corps of Engineers.

Ecosystem management at the province level requires improved coordination among governmental entities responsible for land management decisions and the public those agencies serve. Each PAC will provide advice and recommendations regarding implementation to promote integration and coordination of forest management activities between Federal and non-Federal entities. Each PAC will provide advice regarding implementation of a comprehensive ecosystem management strategy for Federal land within a province (provinces are defined in the ROD at E19).

The chair of each PAC will alternate annually between representatives of the Forest Service and the Bureau of Land Management. When the Bureau of Land Management is not represented on the PIEC, the Forest Service representative will serve as chair. The chair, or a designated agency employee, will serve as the Designated Federal Officer under sections 10(e) and (f) of the Federal Advisory Committee Act (5 U.S.C. App.II). Any vacancies on the committee will be filled in the manner in which the original appointment was made.

A meeting notice will be published in the **Federal Register** within 15 to 45 days before a scheduled meeting date. All meetings are generally open to the public and may include a ''public forum'' that may offer 5–10 minutes for participants to present comments to the advisory committee. Alternates may choose not to be active during this session on the agenda. The chair of the given committee ultimately makes the decision whether to offer time on the agenda for the public to speak to the general body.

Renewal of the PACs does not require an amendment of Bureau of Land Management or Forest Service planning documents because the renewal does not affect the standards and guidelines or land allocations. The Bureau of Land Management and Forest Service will provide further notice, as needed, for additional actions or adjustments when implementing interagency coordination, public involvement, and other aspects of the ROD.

Equal opportunity practices will be followed in all appointments to the advisory committee. To ensure that the recommendations of the PACs have taken into account the needs of diverse groups served by the Departments, membership will, to the extent practicable, include individuals with demonstrated ability to represent minorities, women, and persons with disabilities.

Dated: October 11, 2005.

John Surina,

Deputy Assistant Secretary for Administration.

[FR Doc. 05–20647 Filed 10–14–05; 8:45 am]

BILLING CODE 3410–11–P

DEPARTMENT OF AGRICULTURE

Forest Service

Newspapers Used for Publication of Legal Notices by the Intermountain Region; Utah, Idaho, Nevada, and Wyoming

AGENCY: Forest Service, USDA.

ACTION: Notice.

SUMMARY: This notice lists the newspapers that will be used by the ranger districts, forests and regional office of the Intermountain Region to publish legal notices required under 36 CFR 215, 217, and 218. The intended effect of this action is to inform interested members of the public which newspapers the Forest Service will use to publish notices of proposed actions and notices of decision. This will provide the public with constructive notice of Forest Service proposals and decisions, provide information on the procedures to comment or appeal, and establish the date that the Forest Service will use to determine if comments or appeals were timely.

DATES: Publication of legal notices in the listed newspapers will begin on or after October 1, 2005. The list of newspapers will remain in effect until April 1, 2006, when another notice will be published in the **Federal Register**.

FOR FURTHER INFORMATION CONTACT: Priscilla McLain, Regional Appeals Coordinator, Intermountain Region, 324 25th Street, Ogden, UT 84401, and phone (801) 625–5146.

SUPPLEMENTARY INFORMATION: The administrative procedures at 36 CFR 215, 217, and 218 require the Forest Service to publish notices in a newspaper of general circulation. The content of the notices is specified in 36 CFR 215, 217 and 218. In general, the notices will identify: the decision or project, by title or subject matter; the name and title of the official making the decision; how to obtain additional information; and where and how to file comments or appeals. The date the notice is published will be used to establish the official date for the beginning of the comment or appeal period. The newspapers to be used are as follows:

Regional Forester, Intermountain Region

For decisions made by the Regional Forester affecting National Forests in Idaho:
Idaho Statesman, Boise, Idaho
For decisions made by the Regional Forester affecting National Forests in Nevada:
Reno Gazette-Journal, Reno, Nevada
For decisions made by the Regional Forester affecting National Forests in Wyoming:
Casper Star-Tribune, Casper, Wyoming
For decisions made by the Regional Forester affecting National Forests in Utah:
Salt Lake Tribune, Salt Lake City, Utah
For decisions made by the Regional Forester that affect all National Forests in the Intermountain Region.
Salt Lake Tribune, Salt Lake City, Utah

Ashley National Forest

Ashley Forest Supervisor decisions:
Vernal Express, Vernal, Utah
Duchesne District Ranger decisions:
Uinta Basin Standard, Roosevelt, Utah
Flaming Gorge District Ranger for decisions affecting Wyoming:
Rocket Miner, Rock Springs, Wyoming
Flaming Gorge District Ranger for decisions affecting Utah:
Vernal Express, Vernal, Utah
Roosevelt District Ranger decisions:
Uinta Basin Standard, Roosevelt, Utah
Vernal District Ranger decisions:
Vernal Express, Vernal, Utah

Boise National Forest

Boise Forest Supervisor decisions:
Idaho Statesman, Boise, Idaho
Cascade District Ranger decisions:
Long Valley Advocate, Cascade, Idaho
Emmett District Ranger decisions:
Messenger-Index, Emmett, Idaho
Idaho City District Ranger decisions:
Idaho Statesman, Boise, Idaho
Lowman District Ranger decisions:
Idaho World, Garden Valley, Idaho
Mountain Home District Ranger decisions:
Idaho Statesman, Boise, Idaho

Bridger-Teton National Forest

Bridger-Teton Forest Supervisor decisions:
Casper Star-Tribune, Casper, Wyoming
Big Piney District Ranger decisions:
Casper Star-Tribune, Casper, Wyoming
Buffalo District Ranger decisions:
Casper Star-Tribune, Casper, Wyoming
Greys River District Ranger decisions:
Casper Star-Tribune, Casper, Wyoming
Jackson District Ranger decisions:
Casper Star-Tribune, Casper, Wyoming
Kemmerer District Ranger decisions:
Casper Star-Tribune, Casper, Wyoming
Pinedale District Ranger decisions:
Casper Star-Tribune, Casper, Wyoming

Caribou-Targhee National Forest

Caribou-Targhee Forest Supervisor decisions for the Caribou portion:
Idaho State Journal, Pocatello, Idaho
Caribou-Targhee Forest Supervisor decisions for the Targhee portion:
Post Register, Idaho Falls, Idaho
Ashton District Ranger decisions:
Post Register, Idaho Falls, Idaho
Dubois District Ranger decisions:
Post Register, Idaho Falls, Idaho
Island Park District Ranger decisions:
Post Register, Idaho Falls, Idaho
Montpelier District Ranger decisions:
Idaho State Journal, Pocatello, Idaho
Palisades District Ranger decisions:
Post Register, Idaho Falls, Idaho
Soda Springs District Ranger decisions:
Idaho State Journal, Pocatello, Idaho
Teton Basin District Ranger decisions:
Post Register, Idaho Falls, Idaho
Westside District Ranger decisions:
Idaho State Journal, Pocatello, Idaho

Dixie National Forest

Dixie Forest Supervisor decisions:
Daily Spectrum, St. George, Utah
Cedar City District Ranger decisions:
Daily Spectrum, St. George, Utah
Escalante District Ranger decisions:
Daily Spectrum, St. George, Utah
Pine Valley District Ranger decisions:
Daily Spectrum, St. George, Utah
Powell District Ranger decisions:
Daily Spectrum, St. George, Utah
Teasdale District Ranger decisions:
Richfield Reaper, Richfield, Utah

Fishlake National Forest

Fishlake Forest Supervisor decisions:
Richfield Reaper, Richfield, Utah
Beaver District Ranger decisions:
Richfield Reaper, Richfield, Utah
Fillmore District Ranger decisions:
Richfield Reaper, Richfield, Utah
Loa District Ranger decisions:
Richfield Reaper, Richfield, Utah
Richfield District Ranger decisions:
Richfield Reaper, Richfield, Utah

Humboldt-Toiyabe National Forests

Humboldt-Toiyabe Forest Supervisor decisions for the Humboldt portion:
Elko Daily Free Press, Elko, Nevada
Humboldt-Toiyabe Forest Supervisor decisions for the Toiyabe portion:
Reno Gazette-Journal, Reno, Nevada
Austin District Ranger decisions:
The Battle Mountain Bugle, Battle Mountain, Nevada
Bridgeport District Ranger decisions:
Mammoth Times, Mammoth Lakes, California
Carson District Ranger decisions:
Reno Gazette-Journal, Reno, Nevada
Ely District Ranger decisions:
The Ely Times, Ely, Nevada
Jarbidge District Ranger decisions:
Elko Daily Free Press, Elko, Nevada
Mountain City District Ranger decisions:
Elko Daily Free Press, Elko, Nevada
Ruby Mountains District Ranger decisions:
Elko Daily Free Press, Elko, Nevada
Santa Rosa District Ranger decisions:
Humboldt Sun, Winnemucca, Nevada
Spring Mountains National Recreation Area District Ranger decisions:
Las Vegas Review Journal, Las Vegas, Nevada
Tonopah District Ranger decisions:
Tonopah Times Bonanza-Goldfield News, Tonopah, Nevada

Manti-Lasal National Forest

Manti-LaSal Forest Supervisor decisions:
Sun Advocate, Price, Utah
Ferron District Ranger decisions:
Emery County Progress, Castle Dale, Utah
Moab District Ranger decisions:
Times Independent, Moab, Utah

Monticello District Ranger decisions:
San Juan Record, Monticello, Utah
Price District Ranger decisions:
Sun Advocate, Price, Utah
Sanpete District Ranger decisions:
Sanpete Messenger, Manti, Utah

Payette National Forest

Payette Forest Supervisor decisions:
Idaho Statesman, Boise, Idaho
Council District Ranger decisions:
Adams County Record, Council, Idaho
Krassel District Ranger decisions:
Star News, McCall, Idaho
McCall District Ranger decisions:
Star News, McCall, Idaho
New Meadows District Ranger decisions:
Star News, McCall, Idaho
Weiser District Ranger decisions:
Signal American, Weiser, Idaho

Salmon-Challis National Forest

Salmon-Challis Forest Supervisor decisions for the Salmon portion:
The Recorder-Herald, Salmon, Idaho
Salmon-Challis Forest Supervisor decisions for the Challis portion:
The Challis Messenger, Challis, Idaho
Challis District Ranger decisions:
The Challis Messenger, Challis, Idaho
Leadore District Ranger decisions:
The Recorder-Herald, Salmon, Idaho
Lost River District Ranger decisions:
The Challis Messenger, Challis, Idaho
Middle Fork District Ranger decisions:
The Challis Messenger, Challis, Idaho
North Fork District Ranger decisions:
The Recorder-Herald, Salmon, Idaho
Salmon/Cobalt District Ranger decisions:
The Recorder-Herald, Salmon, Idaho
Yankee Fork District Ranger decisions:
The Challis Messenger, Challis, Idaho

Sawtooth National Forest

Sawtooth Forest Supervisor decisions:
The Times News, Twin Falls, Idaho
Fairfield District Ranger decisions:
The Times News, Twin Falls, Idaho
Ketchum District Ranger decisions:
Idaho Mountain Express, Ketchum, Idaho
Minidoka District Ranger decisions:
The Times News, Twin Falls, Idaho
Sawtooth National Recreation Area:
The Challis Messenger, Challis, Idaho

Uinta National Forest

Uinta Forest Supervisor decisions:
The Daily Herald, Provo, Utah
Heber District Ranger decisions:
The Daily Herald, Provo, Utah
Pleasant Grove District Ranger decisions:
The Daily Herald, Provo, Utah
Spanish Fork District Ranger decisions:
The Daily Herald, Provo, Utah

Wasatch-Cache National Forest

Wasatch-Cache Forest Supervisor decisions:
Salt Lake Tribune, Salt Lake City, Utah
Evanston District Ranger decisions:
Uinta County Herald, Evanston, Wyoming
Kamas District Ranger decisions:
Salt Lake Tribune, Salt Lake City, Utah
Logan District Ranger decisions:
Logan Herald Journal, Logan, Utah
Mountain View District Ranger decisions:
Uinta County Herald, Evanston, Wyoming
Ogden District Ranger decisions:
Ogden Standard Examiner, Ogden, Utah
Salt Lake District Ranger decisions:
Salt Lake Tribune, Salt Lake City, Utah

Dated: October 11, 2005.

Stephen J. Solem,

Acting Deputy Regional Forester.

[FR Doc. 05–20691 Filed 10–14–05; 8:45 am]

BILLING CODE 3410–11–P

DEPARTMENT OF AGRICULTURE

Forest Service

Dry Fork Vegetative Restoration Project, Lewis and Clark National Forest, Cascade and Judith Basin Counties, MT

AGENCY: Forest Service, USDA.

ACTION: Notice of intent to prepare a Supplemental Environmental Impact Statement.

SUMMARY: The USDA Forest Service is preparing a Supplemental Environmental Impact Statement to further address issues associated with old growth associated with the Dry Fork Vegetative Restoration project on the Belt Creek Ranger District of the Lewis and Clark National Forest. This project proposes treatments including timber harvest and prescribed fire to move vegetative conditions such as age class and stand structure towards those that would most likely occur in the absence of fire suppression.

DATES: The Supplemental Draft Environmental Impact Statement (EIS) is expected January 2006 and the Supplemental Final EIS and Record of Decision are expected April 2006.

ADDRESSES: Send written comments to Lesley W. Thompson, Forest Supervisor, Lewis and Clark National Forest, P.O. Box 869, Great Falls, Montana 59403. Copies of the SEIS will be available at the Supervisor's Office, 1101 15th Street North, Great Falls, Montana 59403. Electronic copies will also be available on the Internet at *http://www.fs.fed.us/r1/lewisclark* in the Projects and Plans area.

FOR FURTHER INFORMATION CONTACT: Questions about the proposed action should be directed to Jennifer Woods, Environmental Coordinator, (406) 791–7765; or Al Koss, Belt Creek District Ranger, phone (406) 236–5511.

SUPPLEMENTARY INFORMATION:

Purpose and Need for Action

A landscape assessment conducted by the Forest identified risks and opportunities for the Belt Creek assessment area in the Little Belt Mountains south and east of Great Falls. It showed that trends in some types of vegetation, the age distribution, stand structure and vegetative mosaic deviated notably from what might have occurred under natural conditions. The purpose and need for the Dry Fork Vegetative Restoration project is to move vegetation in a portion of the assessment area toward desired conditions using prescribed fire and timber harvest. An emphasis would be given to areas where there would be improved diversity in vegetative structure, species and age class. In addition, there is a need to reduce wildfire hazards to public and to fire fighters and better protect private lands within and adjacent to the forest.

Proposed Action

Approximately 3,416 acres would be treated using commercial timber harvest and prescribed fire treatment. Road reconstruction would take place on 4.9 miles of existing road and 1.7 miles of new system road would be constructed. No timber harvest would be conducted within inventoried roadless areas. Approximately 20.6 miles of road closures would be implemented through gating, signing, reclamation and change of use.

Alternatives

Alternatives that were considered in detailed study include the No Action Alternative and five additional alternatives that considered a variety of types and amounts of vegetation treatments. In addition, seven other alternatives were considered, but did not merit further evaluation due to lack of feasibility, economics, or because they did not meet the purpose and need.

Responsible Official

The Responsible Official is Lesley W. Thompson, Forest Supervisor, Lewis and Clark National Forest, P.O. Box 869, Great Falls, MT 59403.

Nature of the Decision To Be Made

The scope of the actions in the decision are limited to vegetative treatment measures within the analysis area that would result in a change in age class and structure of the current vegetative conditions, including timber harvest and use of prescribed burning, as well as road management determinations, including road construction and reconstruction.

Scoping Process

The proposal was developed with input from state congressional offices, county commissioners, and local community members, who formed an association as a forum for ensuring community viewpoints were communicated. Two public field trips and two public meetings were held at which approximately 100 people attended. A formal scoping letter was sent to interested parties in April 1998 and a Decision Notice and Finding of No Significant Impact was released in June 2000. Three appeals were received and the vegetative portion of the decision was reversed to better address effects of the project to soil resources.

The USDA Forest Service published a notice of intent to conduct an EIS for the Dry Fork Vegetative Restoration project in the **Federal Register** on November 17, 2000 (Vol. 65, No. 233, page 69496).

The Forest Service released a Draft Environmental Impact Statement (DEIS) in April 2001. The Final Environmental Impact Statement (FEIS) and Record of Decision were released in November 2001. The project was administratively appealed and the Forest Supervisor decision was upheld through administrative review. On June 19, 2003, The Ecology Center and Native Ecosystem Council filed a complaint in the district court for the District of Montana seeking declaratory and injunctive relief. In February 2004, the District Court ruled in favor of the Forest Service. Plaintiffs in that case appealed to the Court of Appeals for the Ninth Circuit. On August 10, 2005, the Court of Appeals reversed the District Court and remanded the case to the Forest Service. The Court of Appeals made the following determinations:

1. The Forest Service failed to demonstrate that the project was consistent with the forest plan's old growth forest standard, and thus failed to comply with the Forest Act.

2. The Forest Service failed to demonstrate that the project was consistent with the forest plans' goshawk monitoring requirements. The Supplemental EIS will address issues associated with the forest plan old growth standard as it relates to the proposed action. A forest plan monitoring report will address issues associated with forest plan goshawk monitoring requirements.

Preliminary Issues

Key issues that were identified include the possible negative environmental effects to soil and water quality and fisheries resources, effects of treatments for addressing forest health issues, effects of actions on wildlife species and their habitat, and effects to recreational activities and opportunities.

Comments Requested

The Draft Supplemental EIS is expected to be filed with the Environmental Protection Agency (EPA) and available for public review in January 2006. At that time the EPA will publish a Notice of Availability (NOA) of the Draft Supplemental EIS in the Federal Register. The comment period for the Draft Supplemental EIS will be 45 days from the publication date of the NOA. A Supplemental Final EIS and new Record of Decision will then be prepared.

Early Notice of the Importance of Public Participation in Subsequent Environmental Review

The Forest Service believes it is important to give reviewers notice at this early stage of several court rulings related to public participation in the environmental review process. First, reviewers of draft environmental impact statements must structure their participation in the environmental review of the proposal so that it is meaningful and alerts an agency to the reviewer's position and contentions. *Vermont Yankee Nuclear Power Corp.* v. *NRDC*, 435 U.S. 519, 553 (1978). Also, environmental objections that could be raised at the draft environmental impact statement stage but that are not raised until after completion of the final environmental impact statement may be waived or dismissed by the courts. *Wisconsin Heritages, Inc.* v. *Harris*, 490 F. Supp. 1334, 1338 (E.D. Wis. 1980). Because of these court rulings, it is very important that those interested in this proposed action participate by the close of the 45-day comment period so that substantive comments and objections are made available to the Forest Service at a time when it can meaningfully consider them and respond to them in the final environmental impact statement.

To assist the Forest Service in identifying and considering issues and concerns on the proposed action, comments on the draft environmental impact statement should be as specific as possible. It is also helpful if comments refer to specific pages or chapters of the draft statement. Comments may also address the adequacy of the draft environmental impact statement or the merits of the alternatives formulated and discussed in the statement. (Reviewers may wish to refer to the Council on Environmental Quality Regulations for implementing the procedural provisions of the National Environmental Policy Act at 40 CFR 1503.3 in addressing these points).

Dated: October 11, 2005.

Lesley W. Thompson,

Forest Supervisor.

[FR Doc. 05–20687 Filed 10–14–05; 8:45 am]

BILLING CODE 3410–11–M

DEPARTMENT OF AGRICULTURE

Forest Service

Eldorado National Forest, Georgetown Ranger District, Georgetown, CA; Notice of Intent To Prepare a Supplement to the Rock Creek Recreational Trails Final Environmental Impact Statement

AGENCY: Forest Service, USDA.

ACTION: Notice of intent to prepare a supplemental environmental impact statement.

SUMMARY: The Forest Service will prepare a supplement to the 1999 Rock Creek Recreational Trails EIS. The supplement will be limited to the cumulative environmental effects on the Pacific Deer Herd. Specifically, the supplement will analyze the cumulative effects of the existing proposed action and all alternatives, in combination with past, present and reasonably foreseeable future actions, as bounded by the mapped range of the Pacific Deer Herd.

DATES: Scoping is not required for supplements to environmental impact statements (40 CFR 1502.9(c)4(4)). The draft supplemental environmental impact statement is expected to be issued in January 2006 and the final supplemental environmental impact statement is expected June 2006. Comments on the draft supplemental environmental impact statement must be received by 45 days after publication.

ADDRESSES: Send written comments to Tim Dabney, District Ranger, Georgetown Ranger Station, 7600 Wentworth Springs Road, Georgetown, CA 95634, Attn: Rock Creek Supplement.

FOR FURTHER INFORMATION CONTACT: Charis Parker, District Wildlife Biologist and Interdisciplinary Team Leader, Georgetown Ranger Station at (530) 333–4312, FAX (530) 333–5522, or by e-mail to *cparker@fs.fed.us.*

SUPPLEMENTARY INFORMATION:

Background

The Rock Creek area encompasses approximately 23,600 acres of public lands centered about five miles to the southeast of the town of Georgetown, CA. Historic uses of mining, logging, and cattle grazing created roads and trails throughout the area to access both public and private lands. Recreational use of these routes, including horseback riding, hiking, fishing, off-highway vehicle (OHV) travel, and mountain biking, has occurred in the area since at least the late 1950s. In 1987, the Forest Service issued Decision Notice and Finding of No Significant Impact on the Rock Creek Off-Road Vehicle Use Environmental Assessment (EA), to better manage recreational use. The decision was challenged in court and the Forest Service was ordered in 1989 to prepare an Environmental Impact Statement (EIS) [*Friends Aware of Wildlife Needs (FAWN)* vs. *United States Department of Agriculture, et al.*, Civ. S–88–214 LKK (E.D. California)]. The Rock Creek Recreational Trails Draft EIS was first published in 1996 with a Revised Draft EIS being published in 1997 based on comments received. The Rock Creek Recreational Trails Final EIS and Record of Decision was issued in 1999 implementing Alternative 6—Resource Protection and Recreation Opportunities.

In February 2002, a lawsuit was filed against the Forest Service that, among other OHV-related issues on the Eldorado National Forest, alleged the cumulative effects analysis conducted for the 1999 Rock Creek Recreational Trails Environmental Impact Statement and Record of Decision was inadequate. On February 15, 2005, Judge Lawrence K. Karlton, United States District Court (Eastern District of California), issued a finding [*Center for Sierra Nevada Conservation, et al.*, v. *John Berry, Eldorado National Forest Supervisor, et al.*, CIV–S–02–0325 LKK/JFM (E.D. California)] that the cumulative effects analysis was indeed inadequate, particularly in regard to the Pacific Deer Herd. More specifically, Judge Karlton found that the cumulative impacts analysis area was incorrectly limited to the Rock Creek project area and that ''other activities,'' including grazing, within the deer herd's entire range, were not analyzed in sufficient detail to adequately determine the cumulative impacts of the proposed action on the deer herd. On August 16, 2005, Judge Karlton issued his order that a supplement to the Rock Creek Recreational Trails Environmental Impact Statement be prepared as specified in its February 15, 2005 finding.

Purpose and Need for Action

Because this supplement is limited to a cumulative effects analysis for the Pacific Deer Herd, the purpose and need for action remain the same as was described in the 1997 Rock Creek Recreational Trails Revised Draft Environmental Impact Statement (RDEIS). ''The need for the Proposed Action arises from continuing conflicts over how the trails in the Rock Creek Area should be managed and the impacts of trail use on the natural resources * * * The purpose or goal in designing the trail system, designated uses, and resource protection measures is to provide a quality recreation experience for all trail users, while minimizing conflicts between the trail users and adjacent landowners, providing protection of natural resources, and promoting safety.'' (Rock Creek Recreational Trails RDEIS, page 1–3)

Proposed Action

The proposed action and all alternatives will also remain the same as was described in the 1997 Rock Creek Recreational Trails Revised Draft Environmental Impact Statement. Six alternatives were analyzed in the original RDEIS to address the Purpose and Need including: (1) No Action—continue with current trail system and management plan; (2) No OHV Use; (3) Increased Multiple Use Recreation—all trail uses allowed on predominantly shared-use trails with reduced closure periods; (4) Separated Multiple Use Recreation—all trail uses allowed but uses segregated to some extent to reduce conflicts between different use types; (5) Reduced Multiple Use Recreation—all trail uses allowed, but trail mileages reduced and closures increased; and (6) Resource Protection and Recreation Opportunities (preferred alternative)—all trail uses allowed in a manner that attempts to find an optimal balance of resource protection and opportunity for a quality recreation experience.

Responsible Official

John Berry, Forest Supervisor, Eldorado National Forest, 100 Forni Road, Placerville, CA, 95667.

Nature of Decision To Be Made

The responsible official will decide, based on the cumulative effects analysis for the Pacific Deer Herd in the supplement, whether to confirm the decision in the 1999 ROD or choose another alternative. This will be documented in a new Record of Decision.

Comment Requested

A legal notice will be published in the newspaper of record and a Notice of Availability will be published in the **Federal Register** to inform the public that supplemental information is available for review and comment. The draft supplemental environmental impact statement will be distributed to all parties that received the 1999 final environmental impact statement.

Early Notice of Importance of Public Participation in Subsequent Environmental Review: A draft supplemental environmental impact statement will be prepared for comment. The comment period on the draft supplemental environmental impact statement will be 45 days from the date the Environmental Protection Agency publishes the notice of availability in the **Federal Register**.

The Forest Service believes, at this early stage, it is important to give reviewers notice of several court rulings related to public participation in the environmental review process. First, reviewers of draft supplemental environmental impact statements must structure their participation in the environmental review of the proposal so that it is meaningful and alerts an agency to the reviewer's position and contentions. *Vermont Yankee Nuclear Power Corp.* v. *NRDC*, 435 U.S. 519, 553 (1978). Also, environmental objections that could be raised at the draft supplemental environmental impact statement stage but that are not raised until after completion of the final supplemental environmental impact statement may be waived or dismissed by the courts. *City of Angoon* v. *Hodel*, 803 F.2d 1016, 1022 (9th Cir. 1986) and *Wisconsin Heritages, Inc.* v. *Harris*, 490 F. Supp. 1334, 1338 (E.D. Wis. 1980). Because of these court rulings, it is very important that those interested in this proposed action participate by the close of the 45-day comment period so that substantive comments and objections are made available to the Forest Service at a time when it can meaningfully consider them and respond to them in the final supplemental environmental impact statement.

To assist the Forest Service in identifying and considering issues and

concerns on the proposed action, comments on the draft supplemental environmental impact statement should be as specific as possible. It is also helpful if comments refer to specific pages or chapters of the draft supplemental statement. Comments may also address the adequacy of the draft supplemental environmental impact statement or the merits of the alternatives formulated and discussed in the statement. Reviewers may wish to refer to the Council on Environmental Quality Regulations for implementing the procedural provisions of the National Environmental Policy Act at 40 CFR 1503.3 in addressing these points.

Comments received, including the names and addresses of those who comment, will be considered part of the public record on this proposal and will be available for public inspection.

(Authority: 40 CFR 1501.7 and 1508.22; Forest Service Handbook 1909.15, Section 21)

Dated: October 3, 2005.

John D. Berry,

Forest Supervisor, Eldorado National Forest.

[FR Doc. 05–20699 Filed 10–14–05; 8:45 am]

BILLING CODE 3410–11–P

DEPARTMENT OF AGRICULTURE

Rural Utilities Service

Information Collection Activity; Comment Request

AGENCY: Rural Utilities Service, USDA.

ACTION: Notice and request for comments.

SUMMARY: In accordance with the Paperwork Reduction Act of 1995 (44 U.S.C. Chapter 35, as amended), the Rural Utilities Service (RUS) invites comments on this information collection for which RUS intends to request approval from the Office of Management and Budget (OMB).

DATES: Comments on this notice must be received by December 16, 2005.

FOR FURTHER INFORMATION CONTACT: Richard C. Annan, Director, Program Development and Regulatory Analysis, Rural Utilities Service, 1400 Independence Ave., SW., STOP 1522, Room 5168 South Building, Washington, DC 20250–1522. Telephone: (202) 720–0784. Fax: (202) 720–4120.

SUPPLEMENTARY INFORMATION: The Office of Management and Budget's (OMB) regulation (5 CFR 1320) implementing provisions of the Paperwork Reduction Act of 1995 (Pub. L. 104–13) requires that interested members of the public and affected agencies have an opportunity to comment on information collection and recordkeeping activities (see 5 CFR 1320.8(d)). This notice identifies an information collection that RUS is submitting to OMB for approval.

Comments are invited on: (a) Whether the proposed collection of information is necessary for the proper performance of the functions of the Agency, including whether the information will have practical utility; (b) the accuracy of the Agency's estimate of the burden of the proposed collection of information including the validity of the methodology and assumptions used; (c) ways to enhance the quality, utility and clarity of the information to be collected; and (d) ways to minimize the burden of the collection of information on those who are to respond, including through the use of appropriate automated, electronic, mechanical, or other technological collection techniques or other forms of information technology. Comments may be sent to: Richard C. Annan, Director, Program Development and Regulatory Analysis, Rural Utilities Service, 1400 Independence Ave., SW., STOP 1522, Room 5168 South Building, Washington, DC 20250–1522. Telephone: (202) 720–0784. Fax: (202) 720–4120.

Title: 7 CFR part 1728, Electric Standards and Specifications for Materials and Construction.

OMB Control Number: 0572–0131.

Type of Request: Extension of a currently approved collection.

Abstract: The Rural Utilities Service makes loans and loan guarantees in accordance with the Rural Electrification Act of 1936, 7 U.S.C. 901 *et seq.*, (RE Act). Section 4 of the RE Act requires that RUS make or guarantee a loan only if there is reasonable assurance that the loan, together with all outstanding loans and obligations of the borrower, will be repaid in full within the time agreed. In order to facilitate the programmatic interests of the RE Act, and, in order to assure that loans made or guaranteed by RUS are adequately secure, RUS, as a secured lender, has established certain standards and specifications for materials, equipment, and the construction of electric systems. The use of standards and specifications for materials, equipment and construction units helps assure RUS that: (1) Appropriate standards and specifications are maintained; (2) RUS loan security is not adversely affected; and (3) loan and loan guarantee funds are used effectively and for the intended purposes. 7 CFR 1728 establishes Agency policy that materials and equipment purchased by RUS electric borrowers or accepted as contractor-furnished material must conform to RUS standards and specifications where they have been established and, if included in RUS IP 202–1, ''List of Materials Acceptable for Use on Systems of RUS Electrification Borrowers'' (List of Materials), must be selected from that list or must have received technical acceptance from RUS.

Estimate of Burden: This collection of information is estimated to average 2.32 hours per response.

Respondents: Businesses or other for profits.

Estimated Number of Respondents: 38.

Estimated Number of Responses per Respondent: 2.30.

Estimated Total Annual Burden on Respondents: 1,760 hours.

Copies of this information collection can be obtained from MaryPat Daskal, Program Development and Regulatory Analysis, at (202) 720–7853. Fax: (202) 720–4120.

All responses to this notice will be summarized and included in the request for OMB approval. All comments will also become a matter of public record.

Dated: October 7, 2005.

Curtis M. Anderson,

Acting Administrator, Rural Utilities Service.

[FR Doc. 05–20650 Filed 10–14–05; 8:45 am]

BILLING CODE 3410–15–P

DEPARTMENT OF AGRICULTURE

Rural Utilities Service

Information Collection Activity; Comment Request

AGENCY: Rural Utilities Service, USDA.

ACTION: Notice and request for comments.

SUMMARY: In accordance with the Paperwork Reduction Act of 1995 (44 U.S.C. chapter 35, as amended), the Rural Utilities Service (RUS) invites comments on this information collection for which RUS intends to request approval from the Office of Management and Budget (OMB).

DATES: Comments on this notice must be received by December 16, 2005.

FOR FURTHER INFORMATION CONTACT: Richard C. Annan, Director, Program Development and Regulatory Analysis, Rural Utilities Service, 1400 Independence Ave., SW., STOP 1522, Room 5168 South Building, Washington, DC 20250–1522. Telephone: (202) 720–0784. Fax: (202) 720–4120.

SUPPLEMENTARY INFORMATION: The Office of Management and Budget's (OMB)

regulation (5 CFR part 1320) implementing provisions of the Paperwork Reduction Act of 1995 (Pub. L. 104–13) requires that interested members of the public and affected agencies have an opportunity to comment on information collection and recordkeeping activities (see 5 CFR 1320.8(d)). This notice identifies an information collection that RUS is submitting to OMB as a revision to an existing collection. Comments are invited on: (a) Whether the proposed collection of information is necessary for the proper performance of the functions of the Agency, including whether the information will have practical utility; (b) the accuracy of the Agency's estimate of the burden of the proposed collection of information including the validity of the methodology and assumptions used; (c) ways to enhance the quality, utility and clarity of the information to be collected; and (d) ways to minimize the burden of the collection of information on those who are to respond, including through the use of appropriate automated, electronic, mechanical, or other technological collection techniques or other forms of information technology. Comments may be sent to: Richard C. Annan, Director, Program Development and Regulatory Analysis, Rural Utilities Service, Department of Agriculture, STOP 1522, Room 5168, 1400 Independence Ave., SW., Washington, DC 20250–1522. Fax: (202) 720–4120.

Title: 7 CFR part 1773, Policy on Audits of RUS Borrowers.

OMB Control Number: 0572–0095.

Type of Request: Extension of a currently approved collection.

Abstract: The Rural Utilities Service relies on the information provided by the borrowers in their financial statements to make lending decision as to borrowers' credit worthiness and to assure that loan funds are approved, advanced and disbursed for proper RE Act purposes. These financial statements are audited by a certified public accountant to provide independent assurance that the data being reported are properly measured and fairly presented.

Estimate of Burden: Public reporting burden for this collection of information is estimated to average 7.80 hours per response.

Respondents: Business or other for-profit, not-for-profit institutions.

Estimated Number of Respondents and Recordkeepers: 1,500.

Estimated Number of Responses per Respondent: 1.42

Estimated Total Annual Burden on Respondents: 16,677 hours.

Copies of this information collection can be obtained from MaryPat Daskal, Program Development and Regulatory Analysis, at (202) 720–7853, Fax: (202) 720–4120.

All responses to this notice will be summarized and included in the request for OMB approval. All comments will also become a matter of public record.

Dated: October 7, 2005.

Curtis M. Anderson,

Acting Administrator, Rural Utilities Service.

[FR Doc. 05–20651 Filed 10–14–05; 8:45 am]

BILLING CODE 3410–15–P

ARCTIC RESEARCH COMMISSION

[USARC 05–100]

United States Arctic Research Commission; Meeting

October 4, 2005.

Notice is hereby given that the U.S. Arctic Research Commission will hold its 77th meeting in Corvallis, OR on October 25, 26, 2005.The Business Sessions, open to the public, will convene at 9 a.m. Tuesday, October 25, 2005. The Agenda items include:

(1) Call to order and approval of the Agenda.

(2) Approval of the Minutes of the 76th Meeting.

(3) Reports from Congressional Liaisons.

(4) Agency Reports.

The focus of the meetings will be reports and updates on programs and research projects affecting the Arctic.

The Business Session will reconvene at 9 a.m. Wednesday, October 26, 2005. An Executive Session will follow adjournment of the Business Session.

Any person planning to attend this meeting who requires special accessibility features and/or auxiliary aids, such as sign language interpreters, must inform the Commission in advance of those needs.

Contact Person for More Information: Dr. Garrett W. Brass, Executive Director U.S. Arctic Research Commission, 703–525–0111 of TDD 703–306–0090.

Garrett W. Brass,

Executive Director.

[FR Doc. 05–20666 Filed 10–14–05; 8:45 am]

BILLING CODE 7555–01–M

BROADCASTING BOARD OF GOVERNORS

Sunshine Act Meeting

DATE AND TIME: Wednesday, October 19, 2005 2:30–6 p.m.

PLACE: Cohen Building, Room 3321, 330 Independence Ave., SW., Washington, DC 20237.

CLOSED MEETING: The members of the Broadcasting Board of Governors (BBG) will meet in closed session to review and discuss a number of issues relating to U.S. Government-funded non-military international broadcasting. They will address internal procedural, budgetary, and personnel issues, as well as sensitive foreign policy issues relating to potential options in the U.S. international broadcasting field. This meeting is closed because if open it likely would either disclose matters that would be properly classified to be kept secret in the interest of foreign policy under the appropriate executive order (5 U.S.C. 552b.(c)(1)) or would disclose information the premature disclosure of which would be likely to significantly frustrate implementation of a proposed agency action. (5 U.S.C. 552b.(c)(9)(B)) In addition, part of the discussion will relate solely to the internal personnel and organizational issues of the BBG or the International Broadcasting Bureau. (5 U.S.C. 552b.(c)(2) and (6))

CONTACT PERSON FOR MORE INFORMATION: Persons interested in obtaining more information should contact either Brenda Hardnett or Carol Booker at (202) 203–4545.

Dated: October 11, 2005.

Carol Booker,

Legal Counsel.

[FR Doc. 05–20796 Filed 10–13–05; 11:21 am]

BILLING CODE 8230–01–M

DEPARTMENT OF COMMERCE

Bureau of Industry and Security

Transportation and Related Equipment Technical Advisory Committee; Notice of Open Meeting

The Transportation and Related Equipment Technical Advisory Committee will meet on November 9, 2005, 9:30 a.m., in the Herbert C. Hoover Building, Room 6087B, 14th Street between Pennsylvania & Constitution Avenues, NW., Washington, DC. The Committee advises the Office of the Assistant Secretary for Export Administration with respect to technical questions that affect the level of export controls applicable to transportation and related equipment or technology.

Agenda

1. Welcome and Introductions.
2. Review of Bureau issues of significance to TRANSTAC members.

3. Regulatory overview.
4. Policy issues.
5. Missile Technology Control Regime.
6. Wassenaar proposal status.
7. Jurisdiction working group report.
8. Presentation of papers and comments by the public.
9. Follow-up on open action items.

The meeting will be open to the public and a limited number of seats will be available. Reservations are not accepted. To the extent time permits, members of the public may present oral statements to the Committee. Written statements may be submitted at any time before or after the meeting. However, to facilitate distribution of public presentation materials to Committee members, the Committee suggests that presenters forward the public presentation materials to Yvette Springer at *Yspringer@bis.doc.gov.*

For more information contact Ms. Springer on (202) 482–4814.

Dated: October 11, 2005.

Yvette Springer,

Committee Liaison Officer

[FR Doc. 05–20692 Filed 10–14–05; 8:45 am]

BILLING CODE 3510–JT–M

DEPARTMENT OF COMMERCE

International Trade Administration

[A–583–008]

Certain Circular Welded Carbon Steel Pipes and Tubes from Taiwan: Preliminary Results of Antidumping Duty Changed Circumstance Review

AGENCY: Import Administration, International Trade Administration, Department of Commerce.

SUMMARY: On April 4, 2005, the Department of Commerce (the Department) published a notice of initiation of changed circumstance review of the antidumping order on certain circular welded carbon steel pipes and tubes from Taiwan to determine whether Yieh Phui is a successor–in-interest to Yieh Hsing. *See Certain Circular Welded Carbon Steel Pipes and Tubes From Taiwan: Initiation of Antidumping Duty Changed Circumstance Review*, 70 FR 17063 (April 4, 2005) (*Initiation Notice*). We have preliminarily concluded that Yieh Phui Enterprise, Ltd. (Yieh Phui) is the successor–in-interest to Yieh Hsing Enterprise, Ltd. (Yieh Hsing) for purposes of determining antidumping duty liability in this proceeding. Interested parties are invited to comment on these preliminary results.

EFFECTIVE DATE: October 17, 2005.

FOR FURTHER INFORMATION CONTACT: Angela Strom or Robert James at (202) 482–2704 or (202) 482–0649, respectively; AD/CVD Operations, Office 7, Import Administration, International Trade Administration, Department of Commerce, 14th Street and Constitution Ave. NW, Washington DC 20230.

SUPPLEMENTARY INFORMATION:

Background

On February 15, 2005, Yieh Phui requested that the Department conduct an expedited changed circumstances review of the order on certain circular welded carbon steel pipes and tubes from Taiwan. The Department determined that the information submitted by Yieh Phui was sufficient to warrant initiation of a changed circumstance review and, on April 4, 2005, the Department published the *Initiation Notice* for this review. On April 6, 2005, the Department issued Yieh Phui a questionnaire requesting further details on the acquisition of Yieh Hsing's pipe facilities. Yieh Phui responded on April 29, 2005. On May 17, 2005, the Department issued a second supplemental questionnaire, to which Yieh Phui responded on June 13, 2005.

Scope of the Order

Imports covered by this order are shipments of certain circular welded carbon steel pipes and tubes. The Department defines such merchandise as welded carbon steel pipes and tubes of circular cross section, with walls not thinner than 0.065 inch and 0.375 inch or more but not over 4.5 inches in outside diameter. These products are commonly referred to in the industry as ''standard pipe'' and are produced to various American Society for Testing Materials specifications, most notably A–53, A–120 and A–135. Standard pipe is currently classified under Harmonized Tariff Schedule of the United States (HTSUS) item numbers 7306.30.5025, 7306.30.5032, 7306.30.5040, and 7306.30.5055. Although the HTSUS subheadings are provided for convenience and customs purposes, the written description of the merchandise under the order is dispositive.

Analysis

In the context of the 2002 - 2003 administrative review, Yieh Hsing had notified the Department that one its affiliated companies, Yieh Phui, had acquired its pipe production facilities in March of 2003. *See* Buy/Sell Agreement at Exhibit 1 of Yieh Hsing's September 11, 2003 submission. Yieh Phui also indicated in its official request for the changed circumstance review and its subsequent supplemental questionnaire responses (SQR) that, as of March 1, 2003, it assumed control with respect to both sales and production of Yieh Hsing's steel pipe operations. According to Yieh Phui, since the sale of the production facilities to Yieh Phui in March of 2003, Yieh Hsing has been engaged only in the production and sales of stainless steel wire rod. After reviewing information received from U.S. Customs and Border Patrol, it appears that Yieh Phui, after March of 2003 and Yieh Hsing were exporting subject merchandise to the United States under their appropriate cash deposit rates. *See* Memorandum for Robert James from Angela Strom dated September 26, 2005.

In making a successor–in-interest determination, the Department examines several factors, including, but not limited to, changes in: (1) management; (2) production facilities; (3) supplier relationships; and (4) customer base. *See Notice of Final Results of Changed Circumstances Review: Polychloroprene Rubber from Japan*, 69 FR 67890 (November 22, 2004) citing, *Brass Sheet and Strip from Canada: Notice of Final Results of Antidumping Duty Administrative Review*, 57 FR 20460 (May 13, 1992) (*Canadian Brass*). While no single factor or a combination of these factors will necessarily provide a dispositive indication, the Department will generally consider the new company to be the successor to the previous company if its resulting operation is not materially dissimilar to that of its predecessor. *See e.g.*, *Industrial Phosphoric Acid from Israel: Final Results of Changed Circumstances Review*, 59 FR 6944 (February 14, 1994), *Canadian Brass*, and *Certain Preserved Mushrooms from India: Final Results of Changed–Circumstances Review*, 68 FR 6884 (February 11, 2003). If evidence demonstrates that, with respect to the production and sale of the subject merchandise, the new company operates as the same entity as the former company, the Department will treat the successor company the same as the predecessor for antidumping purposes. *See Fresh and Chilled Atlantic Salmon from Norway: Final Results of Changed Circumstance Antidumping Administrative Review*, 64 FR 9979 (March 1, 1999).

In terms of the overall legal structure and management, Yieh Phui is virtually identical to Yieh Hsing. Since the same family serves as a controlling party and primary shareholder for both companies, Yieh Phui states that the

transfer of pipe facilities did not change the ultimate ownership of the two entities. One family member in particular served and currently serves as a chairman for Yieh Phui and a board member for Yieh Hsing; thus, all major company strategy and policy decisions are primarily set, influenced and approved by the same person for both companies. The management for the sales and marketing divisions are also similar. This is evidenced by Yieh Hsing's previous deputy manager of ''Pipe, Plate and Sheet'' serving as the section manager of ''Pipe Marketing and Sales'' for Yieh Phui. Furthermore, Yieh Phui maintains the same order processing, distribution channels and sales correspondence as Yieh Hsing did prior to the transfer of the pipe facilities. *See* SQR dated April 29, 2005, at pages 4–11 and Exhibits 3–6.

The record evidence establishes that the pipe production facilities under Yieh Phui's control have remained largely unchanged since the transfer of assets from Yieh Hsing. Although Yieh Phui appointed a new general manager of its pipe operations, Yieh Phui hired the vast majority of former Yieh Hsing employees and supervisors to operate the facility. The Buy/Sell Agreement between Yieh Hsing and Yieh Phui provides a detailed description of the production facilities that were transferred to Yieh Phui, indicating that the identical processes and facilities were used to produce steel pipe products prior to and after the transfer. *See* SQR dated February 15, 2005, at 3 and Exhibits 1 and 3.

Regarding suppliers, Yieh Phui and Yieh Hsing did not purchase major raw material inputs (*i.e.* hot rolled coils) from identical suppliers. Prior to the transfer of the pipe facilities in 2003, Yieh Hsing had purchased hot rolled coils from certain suppliers at a fixed price pursuant to an annual purchase agreement. This annual purchase agreement expired at the end of 2002 and the associated suppliers refused to renew the agreement as a result of the rapid variation of market prices at that time. Yieh Phui provided price statistics published by the Taiwan Steel and Iron Industrial Association to illustrate this upward market trend in hot rolled coil prices throughout 2002 and early 2003. *See* questionnaire response (QR) dated April 29, 2005, at Exhibit 7. Since Yieh Hsing's suppliers refused to renew the purchase agreement, Yieh Phui opted to purchase the hot rolled coils necessary for its newly–acquired pipe operations through one of its established supplier lines. As Yieh Phui had already been purchasing hot rolled coils for its galvanizing operations prior to 2003, it sought to maintain its business relationships with its major supplier of hot rolled coils at that time. Thus, the record shows that Yieh Phui was not in a position to establish the same supply channels as Yieh Hsing and reasonably maintained its relationship with an existing supplier. The difference in suppliers, therefore, does not demonstrate that the companies are materially dissimilar in this particular case.

With respect to customers, Yieh Phui indicated it assumed the same customer base and sales practices that Yieh Hsing had maintained prior to the transfer of assets. Yieh Phui provided charts and sale documentation illustrating that the same customers, importers and negotiating parties were involved in the sales of pipes as when Yieh Hsing was selling subject pipes. *See* SQR dated April 29, 2005, at 17–19 and Exhibits 9–10 and SQR dated June 13, 2005, at Exhibits 2 and 3. The majority of the persons responsible for negotiating sales of pipe and tubes for Yieh Hsing were hired and assigned such tasks by Yieh Phui after the transfer took place. *See* SQR dated April 29, 2005, at 7–8.

Preliminary Results of the Review

In analyzing the totality of the factors on the record, we preliminarily conclude that Yieh Phui operates in essentially the same manner in terms of production, management, and customer base as Yieh Hsing prior to the transfer of Yieh Hsing's pipe facilities to Yieh Phui. The change in supplier relationships does not demonstrate that the companies are materially dissimilar in this case. Morever, the current structure of Yieh Phui and the previous structure of Yieh Hsing are sufficiently similar to support a finding that Yieh Phui is the successor–in-interest to Yieh Hsing. As a result, we have preliminarily determined, in fact, that Yieh Phui is the successor–in-interest to Yieh Hsing and ought to be accorded the same antidumping duty treatment as its predecessor. Should these preliminary results be adopted in our final results of this changed circumstance review, Yieh Hsing's cash deposit rate (*i.e.*, 1.61 percent) will be applied to Yieh Phui's entries of subject merchandise entered, or withdrawn from warehouse, for consumption on or after the date of publication of the final results. Until that time, the cash deposit rate assigned to Yieh Phui's entries is the rate in effect at the time of entry (*i.e.*, the ''all–others'' rate).

Public Comment

Interested parties are invited to comment on these preliminary results. Parties who submit argument in this proceeding are requested to submit with the argument: (1) a statement of the issue, (2) a brief summary of the argument. Any interested party may request a hearing within 10 days of the date of publication of this notice. Any hearing, if requested, will be held no later than 25 days after the date of publication of this notice, or the first workday thereafter. Case briefs may be submitted by interested parties not later than 15 days after the date of publication of this notice. Rebuttal briefs, limited to the issues raised in the case briefs, may be filed not later than 20 days after the date of publication of this notice. All written comments shall be submitted in accordance with 19 CFR § 351.303.

Consistent with 19 CFR § 351.216(e), the Department will publish the final results of this changed circumstance review, including its analysis of issues raised in any written comments, no later than 270 days after the date of publication of the *Initiation Notice*. This notice is in accordance with sections 751(b) and 777(i)(1) of the Tariff Act of 1930, as amended, and 19 C.F.R. § 351.221(c)(3)(i) of the Department's regulations.

Dated: October 3, 2005.

Joseph A. Spetrini,

Acting Assistant Secretaryfor Import Administration.

[FR Doc. E5–5712 Filed 10–14–05; 8:45 am]

BILLING CODE 3510–DS–S

DEPARTMENT OF COMMERCE

International Trade Administration

[A–570–851]

Notice of Amended Final Results of Antidumping Duty Administrative Review: Certain Preserved Mushrooms from the People's Republic of China

AGENCY: Import Administration, International Trade Administration, Department of Commerce.

SUMMARY: On September 14, 2005 the Department of Commerce (the ''Department'') published the final results and final rescission, in part, of the administrative review of the antidumping duty order on certain preserved mushrooms from the People's Republic of China (''PRC''), covering the period of review (POR) February 1, 2003, through January 31, 2004. *See Certain Preserved Mushrooms from the People's Republic of China: Final Results and Final Rescission, In Part, of Antidumping Duty Administrative Review*, 70 FR 54361 (September 14,

2005) (''*Final Results*''). We are amending our *Final Results* to correct ministerial errors made in the calculations of the dumping margins for Xiamen International Trade & Industrial Co., Ltd. (''XITIC''), Shandong Jiufa Edible Fungus Corporation, Ltd. (''Jiufa'') and Guangxi Hengxian Pro–Lights Foods, Inc. (''Guangxi Hengxian'') pursuant to section 751(h) of the Tariff Act of 1930, as amended (the Act).

EFFECTIVE DATE: October 17, 2005.

FOR FURTHER INFORMATION CONTACT: P. Lee Smith or Christopher Riker, AD/CVD Operations, Office 9, Import Administration, International Trade Administration, U.S. Department of Commerce, 14th Street and Constitution Avenue NW., Washington, DC 20230; telephone: (202) 482–1655 or (202) 482–3441, respectively.

SUPPLEMENTARY INFORMATION:

Scope of Order

The products covered by this order are certain preserved mushrooms, whether imported whole, sliced, diced, or as stems and pieces. The certain preserved mushrooms covered under this order are the species *Agaricus bisporus* and *Agaricus bitorquis*. ''Certain Preserved Mushrooms'' refer to mushrooms that have been prepared or preserved by cleaning, blanching, and sometimes slicing or cutting. These mushrooms are then packed and heated in containers including, but not limited to, cans or glass jars in a suitable liquid medium, including, but not limited to, water, brine, butter or butter sauce. Certain preserved mushrooms may be imported whole, sliced, diced, or as stems and pieces. Included within the scope of this order are ''brined'' mushrooms, which are presalted and packed in a heavy salt solution to provisionally preserve them for further processing.

Excluded from the scope of this order are the following: (1) All other species of mushroom, including straw mushrooms; (2) all fresh and chilled mushrooms, including ''refrigerated'' or ''quick blanched mushrooms''; (3) dried mushrooms; (4) frozen mushrooms; and (5) ''marinated,'' ''acidified,'' or ''pickled'' mushrooms, which are prepared or preserved by means of vinegar or acetic acid, but may contain oil or other additives.[1]

The merchandise subject to this order is classifiable under subheadings: 2003.10.0127, 2003.10.0131, 2003.10.0137, 2003.10.0143, 2003.10.0147, 2003.10.0153 and 0711.51.0000 of the Harmonized Tariff Schedule of the United States (''HTSUS''). Although the HTSUS subheadings are provided for convenience and customs purposes, the written description of the scope of this order is dispositive.

Background

On September 14, 2005, the Department of Commerce published the *Final Results* and corresponding issues and decision memorandum. *See Memorandum from Barbara E. Tillman Acting Deputy Assistant Secretary for Import Administration to Joseph A. Spetrini Acting Assistant Secretary for Import Administration, Issues and Decision Memorandum for the Final Results in the 2003/2004 Administrative Review of Certain Preserved Mushrooms from the People's Republic of China*.

On September 13, 2005, Jiufa, XITIC and the Coalition for Fair Preserved Mushroom Trade (''petitioners'') filed timely allegations that the Department made various ministerial errors in the *Final Results*. On September 16, 2005, China Processed Food Import & Export Company and its affiliates (''COFCO'') filed rebuttal comments to ministerial error allegations submitted by the petitioners.[2] No other interested party submitted ministerial error allegations.

A ministerial error is defined in Section 751(h) of the Act and further clarified in 19 CFR 351.224(f) as ''an error in addition, subtraction, or other arithmetic function, clerical error resulting from inaccurate copying, duplication, or the like, and any other similar type of unintentional error which the Secretary considers ministerial.''

After analyzing all interested parties' comments, we have determined, in accordance with 19 CFR 351.224(e), that ministerial errors existed in the calculations for the *Final Results*. For a detailed discussion of these ministerial errors, as well as the Department's analysis, *see* memorandum from Christopher D. Riker to James C. Doyle, *Analysis of Ministerial Error Allegations*, dated October 7, 2005 (''*Ministerial Error Allegation Memorandum*''). The Ministerial Error Allegation Memorandum is on file in the Central Records Unit, room B–099 in the main Department building.

Therefore, in accordance with Section 751(h) of the Act and 19 CFR 351.224(e), we are amending the *Final Results* of the administrative review of certain preserved mushrooms from the PRC. The revised weighted–average dumping margins are detailed in the ''Antidumping Duty Order'' section, below. For company–specific calculations *see* Memorandum from John Conniff, through Christopher D. Riker to the File, *Analysis Memorandum for the Amended Final Results for XITIC* (October 7, 2005); Memorandum from John Conniff through Christopher D. Riker, to the File, *Analysis Memorandum for the Amended Final Results for Jiufa* (October 7, 2005); Memorandum from Amber Musser through Christopher D. Riker to the File, *Analysis Memorandum for the Amended Final Results for Guangxi Hengxian* (October 7, 2005). The revised final weighted–average dumping margins are as follows:

Exporter	Percent
Shandong Jiufa Edible Fungus Corporation Ltd.	3.60
Xiamen International Trade & Industrial Co., Ltd.	0.00
Guangxi Hengxian Pro–Light Foods (Zhangzhou) Co., Ltd.	21.38

The Department shall determine, and U.S. Customs and Border Protection shall assess, antidumping duties on all appropriate entries based on the amended final results. For details on the assessment of antidumping duties on all appropriate entries, *see Final Results*.

These amended final results are published in accordance with sections 751(h) and 777(I)(1) of the Act.

Dated: October 7, 2005.

Joseph A. Spetrini,

Acting Assistant Secretaryfor Import Administration.

[FR Doc. E5–5714 Filed 10–14–05; 8:45 am]

BILLING CODE 3510–DS–S

[1] On June 19, 2000, the Department affirmed that ''marinated,'' ''acidified,'' or ''pickled'' mushrooms containing less than 0.5 percent acetic acid are within the scope of the antidumping duty order. *See* ''Recommendation Memorandum-Final Ruling of Request by Tak Fat, *et al.* for Exclusion of Certain Marinated, Acidified Mushrooms from the Scope of the Antidumping Duty Order on Certain Preserved Mushrooms from the People's Republic of China,'' dated June 19, 2000. On February 9, 2005, this decision was upheld by the United States Court of Appeals for the Federal Circuit. *See Tak Fat v. United States*, 396 F.3d 1378 (Fed. Cir. 2005).

[2] We have not addressed comments pertaining to clerical allegations relating to COFCO's margin in the *Final Results* because the U.S. Court of International Trade has obtained jurisdiction those results pursuant to COFCO's appeal. *See China Processed Food Import & Export Company v. United States*, Court No. 05-00515 (Complaint filed September 19, 2005); *see also, Zenith Elecs. Corp. v. United States*, 884 F.2d 556, 561 (Fed. Cir. 1989).

DEPARTMENT OF COMMERCE

International Trade Administration

[A–351–826]

Notice of Final Results of Antidumping Duty Administrative Review: Small Diameter Seamless Carbon and Alloy Steel Standard, Line and Pressure Pipe from Brazil

AGENCY: Import Administration, International Trade Administration, Department of Commerce.

SUMMARY: On May 10, 2005, the Department of Commerce published the preliminary results of the administrative review of the antidumping duty order on small diameter seamless carbon and alloy steel standard, line and pressure pipe from Brazil. The review covers V&M do Brasil, S.A., a manufacturer/exporter of the subject merchandise. The period of review is August 1, 2003, through July 31, 2004.

Based on our analysis of the comments received, we have made changes in the margin calculations. Therefore, the final results differ from the preliminary results. The final weighted–average dumping margin for the reviewed firm is listed below in the section entitled ''Final Results of Review.''

EFFECTIVE DATE: October 17, 2005.

FOR FURTHER INFORMATION CONTACT: Patrick Edwards or Stephen Bailey at (202) 482–8029 or (202) 482–0193, respectively; AD/CVD Operations, Office 7, Import Administration, International Trade Administration, U.S. Department of Commerce, 14th Street & Constitution Avenue, NW., Washington, DC 20230.

SUPPLEMENTARY INFORMATION:

Background

On May 10, 2005, the Department of Commerce (''the Department'') published in the **Federal Register** its preliminary results in this administrative review. *See Small Diameter Seamless Carbon and Alloy Steel Standard, Line and Pressure Pipe from Brazil: Preliminary Results of Antidumping Duty Administrative Review*, 70 FR 24524 (May 10, 2005) (''*Preliminary Results*''). We invited parties to comment on the *Preliminary Results*. On June 9, 2005, we received a case brief from the sole respondent, V&M do Brasil, S.A. (''VMB''). We received a rebuttal brief from the petitioner, United States Steel Corporation (''petitioner'') on June 17, 2005. Neither party requested a public hearing.

On August 16, 2005, because it was not practicable to complete the final results of this review within the original time period, the Department published in the **Federal Register** an extension of the time limit for completion of the final results of this administrative review in accordance with section 751(a)(3)(A) of the Tariff Act of 1930, as amended (''the Act''). *See Small Diameter Seamless Carbon and Alloy Steel Standard, Line and Pressure Pipe from Brazil: Extension of Time Limit for the Final Results of the Antidumping Duty Administrative Review*, 70 FR 48102 (August 16, 2005).

Scope of the Order

The products covered by the order are seamless pipes produced to the ASTM A–335, ASTM A–106, ASTM A–53 and API 5L specifications and meeting the physical parameters described below, regardless of application. The scope of this order also includes all products used in standard, line, or pressure pipe applications and meeting the physical parameters below, regardless of specification.

For purposes of this order, seamless pipes are seamless carbon and alloy (other than stainless) steel pipes, of circular cross-section, not more than 114.3 mm (4.5 inches) in outside diameter, regardless of wall thickness, manufacturing process (hot–finished or cold–drawn), end finish (plain end, beveled end, upset end, threaded, or threaded and coupled), or surface finish. These pipes are commonly known as standard pipe, line pipe or pressure pipe, depending upon the application. They may also be used in structural applications. Pipes produced in non–standard wall thickness are commonly referred to as tubes.

The seamless pipes subject to this antidumping duty order are currently classifiable under subheadings 7304.10.10.20, 7304.10.50.20, 7304.31.60.50, 7304.39.00.16, 7304.39.00.20, 7304.39.00.24, 7304.39.00.28, 7304.39.00.32, 7304.51.50.05, 7304.51.50.60, 7304.59.60.00, 7304.59.80.10, 7304.59.80.15, 7304.59.80.20, and 7304.59.80.25 of the Harmonized Tariff Schedule of the United States (''HTSUS''). The following information further defines the scope of this order, which covers pipes meeting the physical parameters described above:

Specifications, Characteristics and Uses: Seamless pressure pipes are intended for the conveyance of water, steam, petrochemicals, chemicals, oil products, natural gas, and other liquids and gasses in industrial piping systems. They may carry these substances at elevated pressures and temperatures and may be subject to the application of external heat. Seamless carbon steel pressure pipe meeting the ASTM standard A–106 may be used in temperatures of up to 1000 degrees Fahrenheit, at various American Society of Mechanical Engineers (''ASME'') code stress levels. Alloy pipes made to ASTM standard A–335 must be used if temperatures and stress levels exceed those allowed for A–106 and the ASME codes. Seamless pressure pipes sold in the United States are commonly produced to the ASTM A–106 standard.

Seamless standard pipes are most commonly produced to the ASTM A–53 specification and generally are not intended for high temperature service. They are intended for the low temperature and pressure conveyance of water, steam, natural gas, air and other liquids and gasses in plumbing and heating systems, air conditioning units, automatic sprinkler systems, and other related uses. Standard pipes (depending on type and code) may carry liquids at elevated temperatures but must not exceed relevant ASME code requirements.

Seamless line pipes are intended for the conveyance of oil and natural gas or other fluids in pipelines. Seamless line pipes are produced to the API 5L specification.

Seamless pipes are commonly produced and certified to meet ASTM A–106, ASTM A–53 and API 5L specifications. Such triple certification of pipes is common because all pipes meeting the stringent ASTM A–106 specification necessarily meet the API 5L and ASTM A–53 specifications. Pipes meeting the API 5L specification necessarily meet the ASTM A–53 specification. However, pipes meeting the A–53 or API 5L specifications do not necessarily meet the A–106 specification. To avoid maintaining separate production runs and separate inventories, manufacturers triple–certify the pipes. Since distributors sell the vast majority of this product, they can thereby maintain a single inventory to service all customers.

The primary application of ASTM A–106 pressure pipes and triple–certified pipes is in pressure piping systems by refineries, petrochemical plants and chemical plants. Other applications are in power generation plants (electrical–fossil fuel or nuclear), and in some oil field uses (on shore and off shore) such as for separator lines, gathering lines and metering runs. A minor application of this product is for use as oil and gas distribution lines for commercial applications. These applications constitute the majority of the market for

the subject seamless pipes. However, A–106 pipes may be used in some boiler applications.

The scope of this order includes all seamless pipe meeting the physical parameters described above and produced to one of the specifications listed above, regardless of application, and whether or not also certified to a non–covered specification. Standard, line and pressure applications and the above–listed specifications are defining characteristics of the scope of this order. Therefore, seamless pipes meeting the physical description above, but not produced to the ASTM A–335, ASTM A–106, ASTM A–53, or API 5L standards shall be covered if used in a standard, line or pressure application.

For example, there are certain other ASTM specifications of pipe which, because of overlapping characteristics, could potentially be used in A–106 applications. These specifications generally include A–162, A–192, A–210, A–333, and A–524. When such pipes are used in a standard, line or pressure pipe application, such products are covered by the scope of this order.

Specifically excluded from this order are boiler tubing and mechanical tubing, if such products are not produced to ASTM A–335, ASTM A–106, ASTM A–53 or API 5L specifications and are not used in standard, line or pressure applications. In addition, finished and unfinished oil country tubular goods (''OCTG'') are excluded from the scope of this order, if covered by the scope of another antidumping duty order from the same country. If not covered by such an OCTG order, finished and unfinished OCTG are included in this scope when used in standard, line or pressure applications. Finally, also excluded from this order are redraw hollows for cold-drawing when used in the production of cold-drawn pipe or tube.

Although the HTSUS subheadings are provided for convenience and customs purposes, our written description of the scope of this order is dispositive.

Analysis of Comments Received

The issues raised in the case briefs by parties to this administrative review are addressed in the Issues and Decision Memorandum to Joseph A. Spetrini, Acting Assistant Secretary for Import Administration, from Barbara E. Tillman, Acting Deputy Assistant Secretary (''Decision Memorandum''), which is hereby adopted by this notice. A list of the issues addressed in the Decision Memorandum is appended to this notice. The Decision Memorandum is on file in the Central Records Unit in Room B–099 of the main Commerce building, and can also be accessed directly on the Web at http://ia.ita.doc.gov/frn. The paper copy and electronic version of the Decision Memorandum are identical in content.

Changes Since the Preliminary Results

Based on our analysis of comments received, we have made adjustments to the constructed export price (''CEP'') profit ratio and the total and variable costs used in calculating the final dumping margin in this proceeding. *See* Sales Analysis Memorandum for the Final Results of Administrative Review of Small Diameter Seamless Carbon and Alloy Steel Standard, Line and Pressure Pipe from Brazil: V&M do Brasil, SA (''Analysis Memo''), dated October 7, 2005. We have also made adjustments to the cost of affiliate inputs, certain unreconciled expenses, and the company's selling and general administrative expenses. *See* Cost of Production and Constructed Value Calculation Adjustments for the Final Determination V&M do Brasil S.A. (''COP Memo''), dated October 7, 2005. The adjustments are further discussed in detail in the Decision Memorandum.

Final Results of Review:

As a result of our review, we determine that the following weighted–average margin exists for the period of August 1, 2003, through July 31, 2004:

Producer	Weighted–average margin (Percentage)
V&M do Brasil, S.A.	14.60 percent

Assessment

The Department will determine, and U.S. Customs and Border Protection (''CBP'') shall assess, antidumping duties on all appropriate entries, pursuant to 19 CFR 351.212(b). The Department calculated importer–specific duty assessment rates on the basis of the ratio of the total amount of antidumping duties calculated for the examined sales to the total entered value of the examined sales for that importer. Where the assessment rate is above *de minimis*, we will instruct CBP to assess duties on all entries of subject merchandise produced by VMB. The Department will issue appropriate assessment instructions directly to CBP within 15 days of publication of these final results of review.

Cash Deposits

Furthermore, the following deposit requirements will be effective upon publication of the final results of this administrative review for all shipments of seamless carbon and certain alloy steel standard, line and pressure pipe from Brazil entered, or withdrawn from warehouse, for consumption on or after the publication date of these final results, as provided by section 751(a) of the Act: (1) For the company covered by this review, the cash deposit rate will be the rate listed above; (2) for merchandise exported by producers or exporters not covered in this review but covered in the investigation, the cash deposit rate will continue to be the company–specific rate from the final determination; (3) if the exporter is not a firm covered in this review or the investigation, but the producer is, the cash deposit rate will be that established for the producer of the merchandise for the most recent period; and (4) if neither the exporter nor the producer is a firm covered in this review or the investigation, the cash deposit rate will be 124.94 percent, the ''All Others'' rate established in the less–than-fair–value investigation. These deposit requirements shall remain in effect until publication of the final results of the next administrative review.

This notice also serves as a final reminder to importers of their responsibility under 19 CFR 351.402 (f)(2) to file a certificate regarding the reimbursement of antidumping duties prior to liquidation of the relevant entries during this review period. Failure to comply with this requirement could result in the Secretary's presumption that reimbursement of antidumping duties occurred, and in the subsequent assessment of double antidumping duties.

This notice also is the only reminder to parties subject to administrative protective order (''APO'') of their responsibility concerning the return or destruction of proprietary information disclosed under APO in accordance with 19 CFR 351.305. Timely written notification of the return/destruction of APO materials or conversion to judicial protective order is hereby requested. Failure to comply with the regulations and the terms of an APO is a sanctionable violation.

We are issuing and publishing these results and notice in accordance with sections 751(a)(1) and 777(i) of the Act.

Dated: October 6, 2005.

Joseph A. Spetrini,

Acting Assistant Secretary for Import Administration.

APPENDIX Issues in Decision Memorandum

Comment 1: CEP Profit Adjustments
Comment 2: Establishing the Most Similar Foreign Like Product
Comment 3: Date of Sale
Comment 4: Revised Cost Database

Comment 5: Clerical Errors: Revisions to Variable and Total Costs of Manufacturing

[FR Doc. E5–5715 Filed 10–14–05; 8:45 am]

BILLING CODE 3510–DS–S

DEPARTMENT OF COMMERCE

International Trade Administration

[C–427–819, C–428–829, C–421–809, C–412–821]

Low Enriched Uranium from France, Germany, the Netherlands, and the United Kingdom: Extension of Time Limit for Preliminary Results of Countervailing Duty Administrative Reviews

AGENCY: Import Administration, International Trade Administration, Department of Commerce.

EFFECTIVE DATE: October 17, 2005.

FOR FURTHER INFORMATION CONTACT: Kristen Johnson or Darla Brown, AD/CVD Operations, Office 3, Import Administration, International Trade Administration, U.S. Department of Commerce, 14th Street and Constitution Avenue NW., Washington, DC 20230; telephone: (202) 482–4793 or (202) 482–2849, respectively.

SUPPLEMENTARY INFORMATION:

Background Information

On March 23, 2005, the U.S. Department of Commerce (''the Department'') published a notice of initiation of the administrative reviews of the countervailing duty orders on low enriched uranium from France, Germany, the Netherlands, and the United Kingdom covering the period of review January 1, 2004, through December 31, 2004. *See Initiation of Antidumping and Countervailing Duty Administrative Reviews and Requests for Revocation in Part*, 70 FR 14643 (March 23, 2005). The preliminary results are currently due no later than October 31, 2005.

Extension of Time Limit for Preliminary Results

Section 751(a)(3)(A) of the Tariff Act of 1930, as amended (''the Act''), requires the Department to make a preliminary determination within 245 days after the last day of the anniversary month of an order or finding for which a review is requested. Section 751(a)(3)(A) of the Act further states that if it is not practicable to complete the review within the time period specified, the administering authority may extend the 245-day period to issue its preliminary results by up to 120 days.

We determine that completion of the preliminary results of these reviews within the 245-day period is not practicable for the following reasons. These reviews are extraordinarily complicated because of the complex nature of the more than adequate remuneration program in the review covering France and the request for revocation in the reviews covering Germany, the Netherlands, and the United Kingdom. Given the complexity of these issues, which need to be thoroughly analyzed by the Department, and in accordance with section 751(a)(3)(A) of the Act, we are extending the time period for issuing the preliminary results of reviews by 120 days. Therefore, the preliminary results are now due no later than February 28, 2006. The final results continue to be due 120 days after publication of the preliminary results.

This notice is issued and published in accordance with sections 751(a)(3)(A) and 777(i)(1) of the Act.

Dated: October 11, 2005.

Gary Taverman,

Acting Deputy Assistant Secretary for Import Administration.

[FR Doc. E5–5713 Filed 10–14–05; 8:45 am]

BILLING CODE 3510–DS–S

DEPARTMENT OF COMMERCE

National Oceanic and Atmospheric Administration

[I.D. 092705B]

Endangered and Threatened Species; Take of Anadromous Fish; Correction

AGENCY: National Marine Fisheries Service (NMFS), National Oceanic and Atmospheric Administration (NOAA), Commerce.

ACTION: Notice; availability of fishery plan and request for comment; Correction

SUMMARY: This document corrects an earlier version of this action that was published on October 3, 2005, in which the ACTION statement was omitted. The Oregon Department of Fish and Wildlife (ODFW) has submitted a Fishery Management and Evaluation Plan (FMEP) and the Washington Department of Fish and Wildlife (WDFW) has submitted an amendment to an FMEP pursuant to the protective regulations promulgated for Lower Columbia River (LCR) coho salmon under the Endangered Species Act. The FMEPs specify the future management of inland recreational fisheries potentially affecting LCR coho salmon. This document serves to notify the public of the availability of the FMEPs for review and comment before final approval or disapproval is made by NMFS.

DATES: Comments on the FMEPs must be received at the appropriate address or fax number (see **ADDRESSES**) no later than 5 p.m. Pacific daylight time on November 2, 2005.

ADDRESSES: Written comments on the application should be addressed to the Salmon Recovery Division, Hatcheries and Inland Fisheries Branch, 1201 NE Lloyd Blvd. Suite 1100, Portland, OR 97232 or faxed to 503–872–2737. Comments may be submitted by e-mail. The mailbox address for providing e-mail comments is *LCRCohoFMEPs.nwr@noaa.gov*. Include in the subject line of the e-mail comment the following identifier: *Comments on LCR Coho FMEPs*.

FOR FURTHER INFORMATION CONTACT: Richard Turner, Portland, Oregon, at phone number: (503) 736–4737, or e-mail: *rich.turner@noaa.gov*.

SUPPLEMENTARY INFORMATION:

Species Covered in This Notice

This notice is relevant to the Lower Columbia River coho salmon (*Oncorhynchus kisutch*), Lower Columbia River Chinook salmon (*O. tshawytscha*), Lower Columbia River steelhead (*O. mykiss*), and Columbia River chum salmon (*O. keta*) evolutionarily significant unit (ESU).

ODFW has submitted to NMFS an FMEP: Lower Columbia River Coho in Oregon Freshwater Fisheries of the Lower Columbia River Tributaries (between the Pacific Ocean and Hood River). WDFW has submitted an amendment to their Lower Columbia River FMEP for inland recreational fisheries potentially affecting listed adult and juvenile LCR coho salmon. These FMEPs include fisheries occurring in all tributaries to the Lower Columbia River from the Pacific Ocean to the Hood River in Oregon and the Big White Salmon River in Washington. The objective of the fisheries described in these FMEPs is to harvest known, hatchery-origin coho salmon, and other fish species in a manner that does not appreciably reduce the likelihood of survival and recovery of listed LCR salmon and steelhead ESUs. All fisheries included in these FMEPs will be managed such that only hatchery-origin coho salmon that are adipose fin-clipped may be retained. Impact levels on listed LCR coho salmon are specified in ODFW's FMEP and the amendment to WDFW's FMEP. Population viability analysis and risk assessments in the FMEPs indicate the extinction risk for listed coho salmon would not increase

as a result of the proposed fisheries. A variety of monitoring and evaluation tasks are specified in the FMEPs to assess the abundance of coho salmon, determine fishery effort and catch of coho salmon and other species, and monitor angler compliance. A review of compliance with the provisions of the FMEPs will be conducted by the state fisheries agencies annually and a comprehensive review to evaluate the effectiveness of the FMEPs will occur at a minimum every 5 years.

As specified in the July 10, 2000, the Endangered Species Act (ESA) 4(d) rule for salmon and steelhead (65 FR 42422) and updated rule (June 28, 2005, 70 FR 37160), NMFS may approve an FMEP if it meets criteria set forth in 50 CFR 223.203(b)(4)(i)(A) through (I). Prior to final approval of an FMEP, NMFS must publish notification announcing its availability for public review and comment.

Authority

Under section 4 of the ESA, the Secretary of Commerce is required to adopt such regulations as he deems necessary and advisable for the conservation of species listed as threatened. The ESA salmon and steelhead 4(d) rule (65 FR 42422, July 10, 2000, as updated in 70 FR 37160, July 28, 2005) specifies categories of activities that contribute to the conservation of listed salmonids and sets out the criteria for such activities. The rule further provides that the prohibitions of paragraph (a) of the rule do not apply to activities associated with fishery harvest provided that an FMEP has been approved by NMFS to be in accordance with the salmon and steelhead 4(d) rule (65 FR 42422, July 10, 2000, as updated in 70 FR 37160, July 28, 2005).

Dated: October 12, 2005.

Angela Somma,

Chief, Endangered Species Division, Office of Protected Resources, National Marine Fisheries Service.

[FR Doc. 05–20713 Filed 10–14–05; 8:45 am]

BILLING CODE 3510–22–S

DEPARTMENT OF COMMERCE

National Oceanic and Atmospheric Administration

[I.D. 101105C]

Notice of Intent to Prepare an Environmental Impact Statement on Issuance of Permits for Research on Northern Right Whales in the Atlantic and Pacific Oceans

AGENCY: National Marine Fisheries Service (NMFS), National Oceanic andAtmospheric Administration (NOAA), Commerce.

ACTION: Notice of Intent to prepare environmental impact statement.

SUMMARY: The National Marine Fisheries Service (NMFS) announces its intent to prepare an Environmental Impact Statement (EIS) to analyze the environmental impacts of issuing permits facilitating research on endangered northern right whales.

Publication of this notice begins the official scoping process that will help identify alternatives and determine the scope of environmental issues to be addressed in the EIS. This notice requests public participation in the scoping process and provides information on how to participate.

ADDRESSES: See **SUPPLEMENTARY INFORMATION** for specific dates, times, and locations of public scoping meetings for this issue.

FOR FURTHER INFORMATION CONTACT: Written statements and questions regarding the scoping process must be postmarked by January 31, 2006, and should be mailed to: Steve Leathery, Chief, Permits, Conservation and Education Division, Office of Protected Resources, National Marine Fisheries Service, 1315 East-West Highway, Room 13705, Silver Spring, MD 20910–3226, Fax: 301–427–2582 or e-mail at *rweis.comments@noaa.gov*.

SUPPLEMENTARY INFORMATION: NMFS proposes to continue to issue permits to various individuals and institutions for conduct of research on northern right whales, Eubalaena glacialis, in the Atlantic and Pacific Oceans. Note that the International Whaling Commission recognizes two species of northern right whale: *E. glacialis* in the North Atlantic and *E. japonica* in the North Pacific. NMFS is currently conducting a status review to determine whether to list the population of northern right whales in the Pacific as a separate species (*E. japonica*) from the population in the Atlantic (*E. glacialis*). Permits would be issued pursuant to the provisions of section 104 of the Marine Mammal Protection Act (MMPA; 16 U.S.C. 1361 *et seq.*) and section 10(a)(1)(A) of the Endangered Species Act (ESA; 16 U.S.C. 1531 *et seq.*), and NMFS regulations implementing these statutes.

NMFS is the Federal agency responsible under the MMPA and ESA for management of right whales. NMFS issues permits to qualified individuals and institutions so they can conduct research activities likely to result in collection of information needed by NMFS to conserve and recover northern right whales. NMFS has issued permits for research on right whales for several decades.

The purpose of issuing permits is to allow an exemption to the prohibition on ''takes'' established under the ESA and MMPA. The ESA and the MMPA prohibit ''takes'' of threatened and endangered species, and of marine mammals, respectively. The ESA defines ''take'' as ''to harass, harm, pursue, hunt, shoot, wound, kill, trap, capture, or collect, or to attempt to engage in any such conduct.'' Under the MMPA, ''take'' is defined as to ''harass, hunt, capture, collect or kill, or attempt to harass, hunt, capture, collect or kill any marine mammal.'' The MMPA further defines harassment as ''any act of pursuit, torment, or annoyance which (i) has the potential to injure a marine mammal or marine mammal stock in the wild [Level A harassment]; or (ii) has the potential to disturb a marine mammal or marine mammal stock in the wild by causing a disruption of behavioral patterns, including, but not limited to, migration, breathing, nursing, breeding, feeding, or sheltering but which does not have the potential to injure a marine mammal or marine mammal stock in the wild [Level B harassment].''

In addition to the general prohibitions of the MMPA and ESA, federal regulations (50 CFR 224.103) prohibit both boats and aircraft from approaching any right whale in the North Atlantic closer than 500 yards, except by permit. Many research activities, including aerial and vessel-based surveys, photo-identification, attachment of scientific instruments, and collection of tissue samples (remote biopsy sampling), require approaching right whales closer than this and may result in harassment or other acts otherwise prohibited under the MMPA and ESA.

While the status of the right whale population has remained critical, the interest in research that will identify or resolve conservation problems for the species has grown. The level of research effort relative to the population size has increased and researchers are

developing ever more innovative techniques to study right whales. In addition, Congress continues to appropriate funds to facilitate research on right whales, which in turn drives requests for research permits. Thus, NMFS has decided to prepare an EIS to evaluate the cumulative impacts of research on right whales and to assess the likely environmental effects of issuing permits under a range of alternatives characterized by different research methods, mitigation measures, and level of effort, including a range of sample sizes and temporal and geographic scopes of research.

The Proposed Action Alternative would result in issuance of permits to qualified individuals and institutions to conduct those research activities determined critical or essential to NMFS' conservation and recovery of right whales. To minimize the cumulative impacts of research on right whales, no permits would be issued for lower priority research activities until the highest priority tasks were completed or unless there was sufficient information to determine that the cumulative impacts of allowing additional takes for research would not disadvantage or jeopardize the continued existence of the species. The Proposed Action could thus be viewed as a minimum take alternative, allowing the least amount of research practicable to meet NMFS' needs for recovery of the species.

In addition to the Proposed Action, NMFS will consider other alternatives for issuing permits for research on right whales. One alternative to the Proposed Action is to issue all permits requested regardless of their relative potential contribution to recovery of the species, provided they meet all permit issuance criteria and would not jeopardize the continued existence of the species. In contrast to the Proposed Action, this could be viewed as the maximum allowable take alternative.

Another alternative to the Proposed Action is the No Action Alternative, which CEQ regulations require be included for consideration. The No Action Alternative would only allow conduct of that research on right whales already allowed under existing permits, which are valid through 2010. No new permits would be issued to replace the expiring permits, nor would existing permits be amended to allow modifications in research activities, sample sizes, or objectives.

A fourth alternative considered is the Status Quo. As with the No Action Alternative, the Status Quo Alternative would allow conduct of research on right whales already identified under existing permits, and no permits would be amended to change research activities, sample sizes, or objectives. However, under the Status Quo Alternative, new permits would be issued to replace existing permits as they expire such that the current level of research and types of research activities would continue. Since the Status Quo would not allow issuance of permits for any research activities, objectives, or sample sizes not currently permitted, it would preclude adaptive changes in the research program that may be responsive to changes in the population status or threats to the recovery of the population.

The Status Quo and two other alternatives considered by NMFS may be eliminated from detailed study because they would not allow conduct of research identified by NMFS as necessary for conservation of the species. The other two alternatives that may be eliminated from further study are: (1) imposing a research permit moratorium (i.e., suspending or revoking existing permits and not issuing new ones) and (2) suspending all intrusive research activities (i.e., stopping biopsy sampling, instrument attachment, and other activities that could result in physical injury). In addition to preventing collection of information about right whales needed for NMFS conservation and recovery efforts for the species, a research permit moratorium would seriously hinder conduct of the aerial surveys vital to operation of networks established to minimize shipstrikes with right whales. Suspending permits for intrusive research would impede collection of information on right whale habitat use and population structure which is needed for NMFS conservation and recovery efforts for the species.

Major environmental issues that will be addressed in the EIS include: NMFS' information needs for conservation of the species; the types of research activities to be permitted, including temporal and geographic extent of activities, level of effort (sample sizes and frequency of sampling), and standardized protocols; mitigation measures; and the cumulative impacts of research activities on right whales and the environment. To be consistent with the purposes and policies of the MMPA and ESA and with NMFS' implementing regulations, research permitted under any alternative should contribute to fulfilling a research need or objective identified in the Right Whale Recovery Plan; understanding the basic biology or ecology of marine mammals; or identifying, evaluating, or resolving conservation problems for the species. NMFS is therefore seeking public comments especially in the following five areas related to permits for research on right whales:

(1) *Types of research.* For example, are there critical research needs for this species other than those identified in the Recovery Plan? If so, what are they and how are they likely to benefit the species? Of the research, information, and monitoring needs identified in the Recovery Plan, what are the most appropriate methods to conduct the study or obtain the information?

(2) *Level of research effort.* For example, how much of a specific research activity (e.g., aerial survey, tagging, biopsy sampling, etc.) is enough for management and conservation needs? Can there be too much? If so, how should NMFS set limits? Should there be different standards or more restrictions placed on research conducted on certain age, sex, or reproductive classes or life-history stages? If so, what are those classes/stages and what should those limitations be?

(3) *Coordination of research.* For example, assuming permits are issued to multiple individuals, what are the most appropriate mechanisms for ensuring research is coordinated to maximize information and reduce adverse impacts? Alternatively, should NMFS consider limiting the number of permits to increase coordination and cooperation? If so, how should this be accomplished? Should researchers operating under different permits (but studying the same or related questions - such as aerial survey for population census or biopsy for population genetics) be required to use the same or similar methods to ensure the information collected is comparable and useful in NMFS conservation of the species? If so, what methods are most appropriate (for aerial surveys; vessel surveys; photo-identification; biopsy for genetic analyses, contaminants analyses; etc.)? If not, how should NMFS compare or use the data from various permit holders in its management decisions?

(4) *Qualifications of researchers.* For example, to ensure the study is conducted successfully and with the minimum of adverse impacts, how much prior experience should a permit applicant, principal investigator, or anyone else operating under a permit, have with the specific methods for which they seek a permit?

(5) *Effects of research.* NMFS will be assessing possible effects of the various research methods using all appropriate available information. Anyone having relevant information they believe NMFS should consider in its analysis should

provide a complete citation or reference for retrieving the information. In addition, NMFS is seeking recommendations for study designs that could detect or predict the effects of research on right whales.

For additional information about right whales, the permit process, and related information, please visit our website at *http://www.nmfs.noaa.gov/pr/rightwhale/*.

Scoping Meetings Agenda

Public scoping meetings will be held at the following dates, times, and locations:

1. Thursday, November 3, 2005, 3 – 6 p.m., New Bedford Whaling Museum, Auditorium, 18 Johnny Cake Hill, New Bedford, MA;

2. Saturday, December 10, 2005, 6:30 – 9:30 p.m., Manchester Grand Hyatt, Elizabeth A Room, One Market Place, San Diego, CA; and

3. Thursday, January 19, 2006, 1 – 4 p.m., Silver Spring Metro Center, Building 4, Science Center, 1301 East-West Highway, Silver Spring, MD.

Comments will be accepted at these meetings as well as during the scoping period, and can be mailed to NMFS by January 31, 2006 (see **FOR FURTHER INFORMATION CONTACT**).

We will consider all comments received during the comment period. All hardcopy submissions must be unbound, on paper no larger than 8½ by 11 inches (216 by 279 mm), and suitable for copying and electronic scanning. We request that you include in your comments:

(1) Your name and address;

(2) Whether or not you would like to receive a copy of the Draft EIS; and

(3) Any background documents to support your comments as you feel necessary.

Special Accommodations

These meetings are accessible to people with disabilities. Requests for sign language interpretation or other auxiliary aids should be directed to Carrie Hubard or Tammy Adams, 301-713-2289 (voice) or 301–427–2582 (fax), at least 5 days before the scheduled meeting date.

Dated: October 12, 2005.

Patrick Opay,

Acting Chief, Permits, Conservation and Education Division, Office of Protected Resources, National Marine Fisheries Service.

[FR Doc. 05–20715 Filed 10–14–05; 8:45 am]

BILLING CODE 3510–22–S

DEPARTMENT OF COMMERCE

National Oceanic and Atmospheric Administration

[I.D. 080905A]

Small Takes of Marine Mammals Incidental to Specified Activities; Low-Energy Seismic Survey on the Louisville Ridge, Southwest Pacific Ocean

AGENCY: National Marine Fisheries Service (NMFS), National Oceanic and Atmospheric Administration (NOAA), Commerce.

ACTION: Notice of receipt of application and proposed incidental take authorization; request for comments.

SUMMARY: NMFS has received an application from the Scripps Institution of Oceanography, (Scripps), a part of the University of California, for an Incidental Harassment Authorization (IHA) to take small numbers of marine mammals, by harassment, incidental to conducting an oceanographic survey in the southwestern Pacific Ocean (SWPO). Under the Marine Mammal Protection Act (MMPA), NMFS is requesting comments on its proposal to issue an authorization to Scripps to incidentally take, by harassment, small numbers of several species of cetaceans for a limited period of time during January and February, 2005.

DATES: Comments and information must be received no later than November 16, 2005.

ADDRESSES: Comments on the application should be addressed to Steve Leathery, Chief, Permits, Conservation and Education Division, Office of Protected Resources, National Marine Fisheries Service, 1315 East-West Highway, Silver Spring, MD 20910–3225, or by telephoning the contact listed here. The mailbox address for providing email comments is *PR1.080905A @noaa.gov*. Comments sent via e-mail, including all attachments, must not exceed a 10–megabyte file size. A copy of the application (containing a list of the references used in this document) and an Environmental Assessment (EA) may be obtained by writing to this address or by telephoning the contact listed here and are also available at: *http://www.nmfs.noaa.gov/prot_res/PR2/Small_Take/smalltake_info.htm#applications*.

FOR FURTHER INFORMATION CONTACT: Kenneth Hollingshead, Office of Protected Resources, NMFS, (301) 713–2289, ext 128.

SUPPLEMENTARY INFORMATION:

Background

Sections 101(a)(5)(A) and (D) of the MMPA (16 U.S.C. 1361 *et seq.*) direct the Secretary of Commerce to allow, upon request, the incidental, but not intentional, taking of marine mammals by U.S. citizens who engage in a specified activity (other than commercial fishing) within a specified geographical region if certain findings are made and either regulations are issued or, if the taking is limited to harassment, a notice of a proposed authorization is provided to the public for review.

An authorization may be granted if NMFS finds that the taking will have a negligible impact on the species or stock(s) and will not have an unmitigable adverse impact on the availability of the species or stock(s) for subsistence uses and that the permissible methods of taking and requirements pertaining to the monitoring and reporting of such takings are set forth. NMFS has defined ''negligible impact'' in 50 CFR 216.103 as '' * * * an impact resulting from the specified activity that cannot be reasonably expected to, and is not reasonably likely to, adversely affect the species or stock through effects on annual rates of recruitment or survival.''

Section 101(a)(5)(D) of the MMPA established an expedited process by which citizens of the United States can apply for an authorization to incidentally take small numbers of marine mammals by harassment. Except with respect to certain activities not pertinent here, the MMPA defines ''harassment'' as:

> any act of pursuit, torment, or annoyance which (i) has the potential to injure a marine mammal or marine mammal stock in the wild [Level A harassment]; or (ii) has the potential to disturb a marine mammal or marine mammal stock in the wild by causing disruption of behavioral patterns, including, but not limited to, migration, breathing, nursing, breeding, feeding, or sheltering [Level B harassment].

Section 101(a)(5)(D) establishes a 45–day time limit for NMFS review of an application followed by a 30–day public notice and comment period on any proposed authorizations for the incidental harassment of marine mammals. Within 45 days of the close of the comment period, NMFS must either issue or deny issuance of the authorization.

Summary of Request

On June 29, 2005, NMFS received an application from Scripps for the taking, by harassment, of several species of marine mammals incidental to conducting a low-energy marine seismic

survey program during early 2006 in the SWPO. Scripps plans to conduct a seismic survey of several seamounts on the Louisville Ridge in the SWPO as part of the Integrated Ocean Drilling Program (IODP). As presently scheduled, the seismic survey will occur from about January 21 to February 26, 2006.

The purpose of the research program is to conduct a planned scientific rock-dredging, magnetic, and seismic survey program of six seamounts of the Louisville seamount chain. The results will be used to: (1) Test hypotheses about the eruptive history of the submarine volcanoes, the subsequent formation (by subaerial erosion and submergence) of its many guyots, and motion of the hotspot plume; and (2) design an effective IODP cruise (not currently scheduled) to drill on carefully-selected seamounts. Included in the research planned for 2006 is scientific rock dredging, extensive total-field and three-component magnetic surveys, the use of multi-beam and Chirp techniques to map the seafloor, and high-resolution seismic methods to image the subsea floor. Following the cruise, chemical and geochronologic analyses will be conducted on rocks from 25 sites.

Description of the Activity

The seismic surveys will involve one vessel. The source vessel, the *R/V Roger Revelle*, will deploy a pair of low-energy Generator-Injector (GI) airguns as an energy source (each with a discharge volume of 45 in^3), plus a 450–m (1476–ft) long, 48–channel, towed hydrophone streamer. As the airguns are towed along the survey lines, the receiving system will receive the returning acoustic signals.

The program will consist of approximately 1840 km (994 nm) of surveys, including turns. Water depths within the seismic survey areas are 800–2300 m (2625–7456 ft). The GI guns will be operated on a small grid (see inset in Figure 1 in Scripps (2006)) for about 28 hours at each of 6 seamounts between approximately January 28 to February 19, 2006. There will be additional seismic operations associated with equipment testing, start-up, and repeat coverage of any areas where initial data quality is sub-standard.

The *Revelle* is scheduled to depart from Papeete, French Polynesia, on or about January 21, 2006, and to arrive at Wellington, New Zealand, on or about February 26, 2006. The GI guns will be used for about 28 hours on each of 6 seamounts between about January 28th to February 19th. The exact dates of the activities may vary by a few days because of weather conditions, repositioning, streamer operations and adjustments, airgun deployment, or the need to repeat some lines if data quality is substandard. The overall area within which the seismic surveys will occur is located between approximately 25° and 45°S., and between 155° and 175°W. The surveys will be conducted entirely in International Waters.

In addition to the operations of the GI guns, a 3.5–kHz sub-bottom profiler and passive geophysical sensors to conduct total-field and three-component magnetic surveys will be operated during seismic surveys. A Kongsberg-Simrad EM–120 multi-beam sonar will be used continuously throughout the cruise.

The energy to the airguns is compressed air supplied by compressors on board the source vessel. Seismic pulses will be emitted at intervals of 6–10 seconds. At a speed of 7 knots (13 km/h), the 6–10 sec spacing corresponds to a shot interval of approximately 21.5–36 m (71–118 ft).

The generator chamber of each GI gun, the one responsible for introducing the sound pulse into the ocean, is 45 in^3. The larger (105 in^3) injector chamber injects air into the previously-generated bubble to maintain its shape, and does not introduce more sound into the water. The two 45/105 in^3 GI guns will be towed 8 m (26.2 ft) apart side by side, 21 m (68.9 ft) behind the *Revelle*, at a depth of 2 m (6.6 ft).

General-Injector Airguns

Two GI-airguns will be used from the Revelle during the proposed program. These 2 GI-airguns have a zero to peak (peak) source output of 230.7 dB re 1 microPascal-m (3.4 bar-m) and a peak-to-peak (pk-pk) level of 235.9B (6.2 bar-m). However, these downward-directed source levels do not represent actual sound levels that can be measured at any location in the water. Rather, they represent the level that would be found 1 m (3.3 ft) from a hypothetical point source emitting the same total amount of sound as is emitted by the combined airguns in the airgun array. The actual received level at any location in the water near the airguns will not exceed the source level of the strongest individual source and actual levels experienced by any organism more than 1 m (3.3 ft) from any GI gun will be significantly lower.

Further, the root mean square (rms) received levels that are used as impact criteria for marine mammals (see Richardson *et al.*, 1995) are not directly comparable to these peak or pk-pk values that are normally used to characterize source levels of airgun arrays. The measurement units used to describe airgun sources, peak or pk-pk decibels, are always higher than the rms decibels referred to in biological literature. For example, a measured received level of 160 dB rms in the far field would typically correspond to a peak measurement of about 170 to 172 dB, and to a pk-pk measurement of about 176 to 178 decibels, as measured for the same pulse received at the same location (Greene, 1997; McCauley et al. 1998, 2000). The precise difference between rms and peak or pk-pk values depends on the frequency content and duration of the pulse, among other factors. However, the rms level is always lower than the peak or pk-pk level for an airgun-type source.

The depth at which the sources are towed has a major impact on the maximum near-field output, because the energy output is constrained by ambient pressure. The normal tow depth of the sources to be used in this project is 2.0 m (6.6 ft), where the ambient pressure is approximately 3 decibars. This also limits output, as the 3 decibars of confining pressure cannot fully constrain the source output, with the result that there is loss of energy at the sea surface. Additional discussion of the characteristics of airgun pulses is provided in Scripps application and in previous **Federal Register** documents (see 69 FR 31792 (June 7, 2004) or 69 FR 34996 (June 23, 2004)).

Received sound levels have been modeled by Lamont-Doherty Earth Observatory (L-DEO) for a number of airgun configurations, including two 45–in^3 Nucleus G-guns (G guns), in relation to distance and direction from the airguns. The L-DEO model does not allow for bottom interactions, and is therefore most directly applicable to deep water. Based on the modeling, estimates of the maximum distances from the GI guns where sound levels of 190, 180, 170, and 160 dB microPascal-m (rms) are predicted to be received are shown in Table 1. Because the model results are for the G guns, which have more energy than GI guns of the same size, those distances are overestimates of the distances for the 45 in^3 GI guns.

TABLE 1. DISTANCES TO WHICH SOUND LEVELS ≥190, 180, 170, AND 160 dB RE 1 μPA (RMS) MIGHT BE RECEIVED FROM TWO 45–IN³ G GUNS, SIMILAR TO THE TWO 45–IN³ GI GUNS THAT WILL BE USED DURING THE SEISMIC SURVEY IN THE SW PACIFIC OCEAN DURING JANUARY FEBRUARY 2006. DISTANCES ARE BASED ON MODEL RESULTS PROVIDED BY L-DEO.

Water depth	Estimated distances at received levels (m)			
	190 dB	180 dB	170 dB	160 dB
100–1000 m	15	60	188	525
>1000 m	10	40	125	350

Some empirical data concerning the 180-, and 160–dB distances have been acquired based on measurements during an acoustic verification study conducted by L-DEO in the northern Gulf of Mexico between May 27 and June 3, 2003 (Tolstoy *et al.*, 2004). Although the results are limited, the data showed that water depth affected the radii around the airguns where the received level would be 180 dB re 1 microPa (rms), NMFS' current injury threshold safety criterion applicable to cetaceans (NMFS, 2000). Similar depth-related variation is likely in the 190–dB distances applicable to pinnipeds. Correction factors were developed for water depths 100–1000 m (328–3281 ft) and less than 100 m (328 ft). The proposed survey will occur in depths 800–2300 m (2625–7456 ft), so only the correction factor for intermediate water depths is relevant here.

The empirical data indicate that, for deep water (>1000 m (3281 ft)), the L-DEO model tends to overestimate the received sound levels at a given distance (Tolstoy *et al.*, 2004). However, to be precautionary pending acquisition of additional empirical data, it is proposed that safety radii during airgun operations in deep water will be the values predicted by L-DEO's model (Table 1). Therefore, the assumed 180- and 190–dB radii are 40 m (131 ft) and 10 m (33 ft), respectively.

Bathymetric Sonar and Sub-bottom Profiler

The Kongsberg-Simrad EM120 multi-beam sonar operates at 11.25–12.6 kHz, and is mounted in the hull of the *Revelle*. It operates in several modes, depending on water depth. In the proposed survey, it will be used in deep (>800–m) water, and will operate in ''deep'' mode. The beamwidth is 1o or 2o fore-aft and a total of 150° athwartship. Estimated maximum source levels are 239 and 233 dB at 1° and 2° beam widths, respectively. Each ''ping'' consists of nine successive fan-shaped transmissions, each ensonifying a sector that extends 1° or 2° fore-aft. In the ''deep'' mode, the total duration of the transmission into each sector is 15 ms. The nine successive transmissions span an overall cross-track angular extent of about 150 degrees, with 16 ms gaps between the pulses for successive sectors. A receiver in the overlap area between two sectors would receive two 15–ms pulses separated by a 16–ms gap. The ''ping'' interval varies with water depth, from approximately 5 sec at 1000 m (3281 ft) to 20 sec at 4000 m (13123 ft/2.2 nm).

Sub-bottom Profiler – The sub-bottom profiler is normally operated to provide information about the sedimentary features and the bottom topography that is simultaneously being mapped by the multi-beam sonar. The energy from the sub-bottom profiler is directed downward by a 3.5–kHz transducer mounted in the hull of the *Revelle*. The output varies with water depth from 50 watts in shallow water to 800 watts in deep water. Pulse interval is 1 second (s) but a common mode of operation is to broadcast five pulses at 1–s intervals followed by a 5–s pause. The beamwidth is approximately 30° and is directed downward. Maximum source output is 204 dB re 1 microPa (800 watts) while normal source output is 200 dB re 1 microPa (500 watts). Pulse duration will be 4, 2, or 1 ms, and the bandwith of pulses will be 1.0 kHz, 0.5 kHz, or 0.25 kHz, respectively.

Although the sound levels have not been measured directly for the sub-bottom profiler used by the *Revelle*, Burgess and Lawson (2000) measured sounds propagating more or less horizontally from a sub-bottom profiler similar to the Scripps unit with similar source output (i.e., 205 dB re 1 microPa m). For that profiler, the 160– and 180–dB re 1 microPa (rms) radii in the horizontal direction were estimated to be, respectively, near 20 m (66 ft) and 8 m (26 ft) from the source, as measured in 13 m (43 ft) water depth. The corresponding distances for an animal in the beam below the transducer would be greater, on the order of 180 m (591 ft) and 18 m (59 ft) respectively, assuming spherical spreading. Thus the received level for the Scripps sub-bottom profiler would be expected to decrease to 160 and 180 dB about 160 m (525 ft) and 16 m (52 ft) below the transducer, respectively, assuming spherical spreading. Corresponding distances in the horizontal plane would be lower, given the directionality of this source (30o beamwidth) and the measurements of Burgess and Lawson (2000).

Characteristics of Airgun Pulses

Discussion of the characteristics of airgun pulses was provided in several previous **Federal Register** documents (see 69 FR 31792 (June 7, 2004) or 69 FR 34996 (June 23, 2004)) and is not repeated here. Reviewers are encouraged to read these earlier documents for additional information.

Description of Habitat and Marine Mammals Affected by the Activity

Forty species of cetacean, including 31 odontocete (dolphins and small- and large-toothed whales) species and nine mysticete (baleen whales) species, are believed by scientists to occur in the southwest Pacific in the proposed seismic survey area. More detailed information on these species is contained in the Scripps application and the National Science Foundation (NSF) EA which are available at: *http://www.nmfs.noaa.gov/prot_res/PR2/Small_Take/smalltake_info.htm#applications*. Table 2 in both the Scripps application and NSF EA summarizes the habitat, occurrence, and regional population estimate for these species. The following species may be affected by this low-intensity seismic survey: Sperm whale, pygmy and dwarf sperm whales, southern bottlenose whale, Arnoux's beaked whale, Cuvier's beaked whale, Shepherd's beaked whale, mesoplodont beaked whales (Andrew's beaked whale, Blainville's beaked whale, gingko-toothed whale, Gray's beaked whale, Hector's beaked whale, spade-toothed whale, strap-toothed whale), melon-headed whale, pygmy killer whale, false killer whale, killer whale, long-finned pilot whale, short-finned pilot whale, rough-toothed dolphin, bottlenose dolphin, pantropical spotted dolphin, spinner dolphin, striped dolphin, short-beaked common dolphin, hourglass dolphin, Fraser's dolphin , Risso's dolphin, southern right whale dolphin, spectacled porpoise, humpback whale, southern right whale, pygmy right whale, common minke whale, Antarctic minke whale. Bryde's whale, sei whale , fin whale and blue whale. Because the proposed survey area spans a wide range of latitudes (25–45° S), tropical, temperate, and possibly polar species are all likely to be found there. The survey area is all in deep-water habitat but is close to oceanic island (Kermadec Islands) habitats, so both coastal and oceanic species might be encountered.

However, abundance and density estimates of cetaceans found there are provided for reference only, and are not necessarily the same as those that likely occur in the survey area.

Five species of pinnipeds could potentially occur in the proposed seismic survey area: southern elephant seal, leopard seal, crabeater seal, Antarctic fur seal, and the sub-Antarctic fur seal. All are likely to be rare, if they occur at all, as their normal distributions are south of the Scripps survey area. Outside the breeding season, however, they disperse widely in the open ocean (Boyd, 2002; King, 1982; Rogers, 2002). Only three species of pinniped are known to wander regularly into the area (Reeves *et al.*, 1999): the Antarctic fur seal, the sub-Antarctic fur seal, and the leopard seal. Leopard seals are seen as far north as the Cook Islands (Rogers, 2002).

Potential Effects on Marine Mammals

As outlined in several previous NMFS documents, the effects of noise on marine mammals are highly variable, and can be categorized as follows (based on Richardson *et al.*, 1995):

(1) The noise may be too weak to be heard at the location of the animal (i.e., lower than the prevailing ambient noise level, the hearing threshold of the animal at relevant frequencies, or both);

(2) The noise may be audible but not strong enough to elicit any overt behavioral response;

(3) The noise may elicit reactions of variable conspicuousness and variable relevance to the well being of the marine mammal; these can range from temporary alert responses to active avoidance reactions such as vacating an area at least until the noise event ceases;

(4) Upon repeated exposure, a marine mammal may exhibit diminishing responsiveness (habituation), or disturbance effects may persist; the latter is most likely with sounds that are highly variable in characteristics, infrequent and unpredictable in occurrence, and associated with situations that a marine mammal perceives as a threat;

(5) Any anthropogenic noise that is strong enough to be heard has the potential to reduce (mask) the ability of a marine mammal to hear natural sounds at similar frequencies, including calls from conspecifics, and underwater environmental sounds such as surf noise;

(6) If mammals remain in an area because it is important for feeding, breeding or some other biologically important purpose even though there is chronic exposure to noise, it is possible that there could be noise-induced physiological stress; this might in turn have negative effects on the well-being or reproduction of the animals involved; and

(7) Very strong sounds have the potential to cause temporary or permanent reduction in hearing sensitivity. In terrestrial mammals, and presumably marine mammals, received sound levels must far exceed the animal's hearing threshold for there to be any temporary threshold shift (TTS) in its hearing ability. For transient sounds, the sound level necessary to cause TTS is inversely related to the duration of the sound. Received sound levels must be even higher for there to be risk of permanent hearing impairment. In addition, intense acoustic or explosive events may cause trauma to tissues associated with organs vital for hearing, sound production, respiration and other functions. This trauma may include minor to severe hemorrhage.

Effects of Seismic Surveys on Marine Mammals

The Scripps' application provides the following information on what is known about the effects on marine mammals of the types of seismic operations planned by Scripps. The types of effects considered here are (1) tolerance, (2) masking of natural sounds, (2) behavioral disturbance, and (3) potential hearing impairment and other non-auditory physical effects (Richardson *et al.*, 1995). Given the relatively small size of the airguns planned for the present project, its effects are anticipated to be considerably less than would be the case with a large array of airguns. Scripps and NMFS believe it is very unlikely that there would be any cases of temporary or especially permanent hearing impairment, or non-auditory physical effects. Also, behavioral disturbance is expected to be limited to distances less than 520 m (1706 ft) from the source, the zone calculated for 160 dB or the onset of Level B harassment. Additional discussion on species-specific effects can be found in the Scripps application.

Tolerance

Numerous studies (referenced in Scripps, 2005) have shown that pulsed sounds from airguns are often readily detectable in the water at distances of many kilometers, but that marine mammals at distances more than a few kilometers from operating seismic vessels often show no apparent response. That is often true even in cases when the pulsed sounds must be readily audible to the animals based on measured received levels and the hearing sensitivity of that mammal group. However, most measurements of airgun sounds that have been reported concerned sounds from larger arrays of airguns, whose sounds would be detectable farther away than that planned for use in the proposed survey. Although various baleen whales, toothed whales, and pinnipeds have been shown to react behaviorally to airgun pulses under some conditions, at other times mammals of all three types have shown no overt reactions. In general, pinnipeds and small odontocetes seem to be more tolerant of exposure to airgun pulses than are baleen whales. Given the relatively small, low-energy airgun source planned for use in this project, mammals are expected to tolerate being closer to this source than would be the case for a larger airgun source typical of most seismic surveys.

Masking

Masking effects of pulsed sounds (even from large arrays of airguns) on marine mammal calls and other natural sounds are expected to be limited (due in part to the small size of the GI airguns), although there are very few specific data on this. Given the small acoustic source planned for use in the SWPO, there is even less potential for masking of baleen or sperm whale calls during the present research than in most seismic surveys (Scripps, 2005). GI-airgun seismic sounds are short pulses generally occurring for less than 1 sec every 6–10 seconds or so. The 6–10 sec spacing corresponds to a shot interval of approximately 21.5–36 m (71–118 ft). Sounds from the multi-beam sonar are very short pulses, occurring for 15 msec once every 5 to 20 sec, depending on water depth.

Some whales are known to continue calling in the presence of seismic pulses. Their calls can be heard between the seismic pulses (Richardson *et al.*, 1986; McDonald *et al.*, 1995, Greene *et al.*, 1999). Although there has been one report that sperm whales cease calling when exposed to pulses from a very distant seismic ship (Bowles *et al.*, 1994), a recent study reports that sperm whales continued calling in the presence of seismic pulses (Madsen *et al.*, 2002). Given the relatively small source planned for use during this survey, there is even less potential for masking of sperm whale calls during the present study than in most seismic surveys. Masking effects of seismic pulses are expected to be negligible in the case of the smaller odontocete cetaceans, given the intermittent nature of seismic pulses and the relatively low source level of the airguns to be used in

the SWPO. Also, the sounds important to small odontocetes are predominantly at much higher frequencies than are airgun sounds.

Most of the energy in the sound pulses emitted by airgun arrays is at low frequencies, with strongest spectrum levels below 200 Hz and considerably lower spectrum levels above 1000 Hz. Among marine mammals, these low frequencies are mainly used by mysticetes, but generally not by odontocetes or pinnipeds. An industrial sound source will reduce the effective communication or echolocation distance only if its frequency is close to that of the marine mammal signal. If little or no overlap occurs between the industrial noise and the frequencies used, as in the case of many marine mammals relative to airgun sounds, communication and echolocation are not expected to be disrupted. Furthermore, the discontinuous nature of seismic pulses makes significant masking effects unlikely even for mysticetes.

A few cetaceans are known to increase the source levels of their calls in the presence of elevated sound levels, or possibly to shift their peak frequencies in response to strong sound signals (Dahlheim, 1987; Au, 1993; Lesage *et al.*, 1999; Terhune, 1999; as reviewed in Richardson *et al.*, 1995). These studies involved exposure to other types of anthropogenic sounds, not seismic pulses, and it is not known whether these types of responses ever occur upon exposure to seismic sounds. If so, these adaptations, along with directional hearing, pre-adaptation to tolerate some masking by natural sounds (Richardson *et al.*, 1995) and the relatively low-power acoustic sources being used in this survey, would all reduce the importance of masking marine mammal vocalizations.

Disturbance by Seismic Surveys

Disturbance includes a variety of effects, including subtle changes in behavior, more conspicuous dramatic changes in behavioral activities, and displacement. However, there are difficulties in defining which marine mammals should be counted as ''taken by harassment''. For many species and situations, scientists do not have detailed information about their reactions to noise, including reactions to seismic (and sonar) pulses. Behavioral reactions of marine mammals to sound are difficult to predict. Reactions to sound, if any, depend on species, state of maturity, experience, current activity, reproductive state, time of day, and many other factors. If a marine mammal does react to an underwater sound by changing its behavior or moving a small distance, the impacts of the change may not rise to the level of a disruption of a behavioral pattern. However, if a sound source would displace marine mammals from an important feeding or breeding area, such a disturbance would likely constitute Level B harassment under the MMPA. Given the many uncertainties in predicting the quantity and types of impacts of noise on marine mammals, scientists often resort to estimating how many mammals may be present within a particular distance of industrial activities or exposed to a particular level of industrial sound. With the possible exception of beaked whales, NMFS believes that this is a conservative approach and likely overestimates the numbers of marine mammals that are affected in some biologically important manner.

The sound exposure criteria used to estimate how many marine mammals might be harassed behaviorally by the seismic survey are based on behavioral observations during studies of several species. However, information is lacking for many species. Detailed information on potential disturbance effects on baleen whales, toothed whales, and pinnipeds can be found on pages 33–37 and Appendix A in Scripps's SWPO application.

Hearing Impairment and Other Physical Effects

Temporary or permanent hearing impairment is a possibility when marine mammals are exposed to very strong sounds, but there has been no specific documentation of these effects for marine mammals exposed to airgun pulses. Current NMFS policy precautionarily sets impulsive sounds equal to or greater than 180 and 190 dB re 1 microPa (rms) as the exposure thresholds for onset of Level A harassment for cetaceans and pinnipeds, respectively (NMFS, 2000). Those criteria have been used in defining the safety (shut-down) radii for seismic surveys. However, those criteria were established before there were any data on the minimum received levels of sounds necessary to cause auditory impairment in marine mammals. As discussed in the Scripps application and summarized here,

1. The 180–dB criterion for cetaceans is probably quite precautionary, i.e., lower than necessary to avoid TTS let alone permanent auditory injury, at least for delphinids.

2. The minimum sound level necessary to cause permanent hearing impairment is higher, by a variable and generally unknown amount, than the level that induces barely-detectable TTS.

3. The level associated with the onset of TTS is often considered to be a level below which there is no danger of permanent damage.

Given the small size of the two 45 in^3 GI-airguns, along with the proposed monitoring and mitigation measures, there is little likelihood that any marine mammals will be exposed to sounds sufficiently strong to cause even the mildest (and reversible) form of hearing impairment. Several aspects of the planned monitoring and mitigation measures for this project are designed to detect marine mammals occurring near the 2 GI-airguns (and bathymetric sonar), and to avoid exposing them to sound pulses that might (at least in theory) cause hearing impairment. In addition, research and monitoring studies on gray whales, bowhead whales and other cetacean species indicate that many cetaceans are likely to show some avoidance of the area with ongoing seismic operations. In these cases, the avoidance responses of the animals themselves will reduce or avoid the possibility of hearing impairment.

Non-auditory physical effects may also occur in marine mammals exposed to strong underwater pulsed sound. Possible types of non-auditory physiological effects or injuries that theoretically might occur in mammals close to a strong sound source include stress, neurological effects, bubble formation, resonance effects, and other types of organ or tissue damage. It is possible that some marine mammal species (i.e., beaked whales) may be especially susceptible to injury and/or stranding when exposed to strong pulsed sounds. However, Scripps and NMFS believe that it is especially unlikely that any of these non-auditory effects would occur during the proposed survey given the small size of the acoustic sources, the brief duration of exposure of any given mammal, and the proposed mitigation and monitoring measures. The following paragraphs discuss the possibility of TTS, permanent threshold shift (PTS), and non-auditory physical effects.

TTS

TTS is the mildest form of hearing impairment that can occur during exposure to a strong sound (Kryter, 1985). When an animal experiences TTS, its hearing threshold rises and a sound must be stronger in order to be heard. TTS can last from minutes or hours to (in cases of strong TTS) days. Richardson *et al.* (1995) note that the magnitude of TTS depends on the level and duration of noise exposure, among

other considerations. For sound exposures at or somewhat above the TTS threshold, hearing sensitivity recovers rapidly after exposure to the noise ends. Little data on sound levels and durations necessary to elicit mild TTS have been obtained for marine mammals.

For toothed whales exposed to single short pulses, the TTS threshold appears to be, to a first approximation, a function of the energy content of the pulse (Finneran *et al.*, 2002). Given the available data, the received level of a single seismic pulse might need to be on the order of 210 dB re 1 microPa rms (approx. 221–226 dB pk pk) in order to produce brief, mild TTS. Exposure to several seismic pulses at received levels near 200 205 dB (rms) might result in slight TTS in a small odontocete, assuming the TTS threshold is (to a first approximation) a function of the total received pulse energy (Finneran *et al.*, 2002). Seismic pulses with received levels of 200 205 dB or more are usually restricted to a zone of no more than 100 m (328 ft) around a seismic vessel operating a large array of airguns. Because of the small airgun source planned for use during this project, such sound levels would be limited to distances within a few meters directly astern of the *Revelle*.

There are no data, direct or indirect, on levels or properties of sound that are required to induce TTS in any baleen whale. However, TTS is not expected to occur during this survey given the small size of the source limiting these sound pressure levels to the immediate proximity of the vessel, and the strong likelihood that baleen whales would avoid the approaching airguns (or vessel) before being exposed to levels high enough for there to be any possibility of TTS.

TTS thresholds for pinnipeds exposed to brief pulses (single or multiple) have not been measured, although exposures up to 183 dB re 1 microPa (rms) have been shown to be insufficient to induce TTS in California sea lions (Finneran *et al.*, 2003). However, prolonged exposures show that some pinnipeds may incur TTS at somewhat lower received levels than do small odontocetes exposed for similar durations (Kastak *et al.*, 1999; Ketten *et al.*, 2001; Au *et al.*, 2000). For this research cruise therefore, TTS is unlikely for pinnipeds.

A marine mammal within a zone with a radius of ≤100 m (≤328 ft) around a typical large array of operating airguns might be exposed to a few seismic pulses with levels of ≥205 dB, and possibly more pulses if the mammal moved with the seismic vessel. Also, around smaller arrays, such as the 2 GI-airgun array proposed for use during this survey, a marine mammal would need to be even closer to the source to be exposed to levels greater than or equal to 205 dB. However, as noted previously, most cetacean species tend to avoid operating airguns, although not all individuals do so. In addition, ramping up airgun arrays, which is now standard operational protocol for U.S. and some foreign seismic operations, should allow cetaceans to move away from the seismic source and to avoid being exposed to the full acoustic output of the airgun array. Even with a large airgun array, it is unlikely that these cetaceans would be exposed to airgun pulses at a sufficiently high level for a sufficiently long period to cause more than mild TTS, given the relative movement of the vessel and the marine mammal. However, with a large airgun array, TTS would be more likely in any odontocetes that bow-ride or otherwise linger near the airguns. While bow-riding, odontocetes would be at or above the surface, and thus not exposed to strong sound pulses given the pressure-release effect at the surface. However, bow-riding animals generally dive below the surface intermittently. If they did so while bow-riding near airguns, they would be exposed to strong sound pulses, possibly repeatedly. During this project, the anticipated 180–dB radius is less than 60 m (197 ft), the array is towed about 21 m (69 ft) behind the *Revelle*, the bow of the *Revelle* will be about 104 m (341 ft) ahead of the airguns, and the 205–dB radius would be less than 50 m (165 ft). Thus, TTS would not be expected in the case of odontocetes bow riding during airgun operations, and if some cetaceans did incur TTS through exposure to airgun sounds, it would very likely be a temporary and reversible phenomenon.

NMFS believes that, to avoid Level A harassment, cetaceans should not be exposed to pulsed underwater noise at received levels exceeding 180 dB re 1 microPa (rms). The corresponding limit for pinnipeds has been set at 190 dB. The predicted 180- and 190–dB distances for the airgun arrays operated by Scripps during this activity are summarized in Table 1 in this document. These sound levels are not considered to be the levels at or above which TTS might occur. Rather, they are the received levels above which, in the view of a panel of bioacoustics specialists convened by NMFS (at a time before TTS measurements for marine mammals started to become available), one could not be certain that there would be no injurious effects, auditory or otherwise, to marine mammals. As noted here, TTS data that are now available imply that, at least for dolphins, TTS is unlikely to occur unless the dolphins are exposed to airgun pulses substantially stronger than 180 dB re 1 microPa (rms).

It has also been shown that most whales tend to avoid ships and associated seismic operations. Thus, whales will likely not be exposed to such high levels of airgun sounds. Because of the relatively slow ship speed, any whales close to the trackline could move away before the sounds become sufficiently strong for there to be any potential for hearing impairment. Therefore, there is little potential for whales being close enough to an array to experience TTS. In addition, ramping up the airgun array, which has become standard operational protocol for many seismic operators including Scripps, should allow cetaceans to move away from the seismic source and to avoid being exposed to the full acoustic output of the GI airguns.

Permanent Threshold Shift (PTS)

When PTS occurs there is physical damage to the sound receptors in the ear. In some cases there can be total or partial deafness, while in other cases the animal has an impaired ability to hear sounds in specific frequency ranges. Although there is no specific evidence that exposure to pulses of airgun sounds can cause PTS in any marine mammals, even with the largest airgun arrays, physical damage to a mammal's hearing apparatus can potentially occur if it is exposed to sound impulses that have very high peak pressures, especially if they have very short rise times (time required for sound pulse to reach peak pressure from the baseline pressure). Such damage can result in a permanent decrease in functional sensitivity of the hearing system at some or all frequencies.

Single or occasional occurrences of mild TTS are not indicative of permanent auditory damage in terrestrial mammals. However, very prolonged exposure to sound strong enough to elicit TTS, or shorter-term exposure to sound levels well above the TTS threshold, can cause PTS, at least in terrestrial mammals (Kryter, 1985). Relationships between TTS and PTS thresholds have not been studied in marine mammals but are assumed to be similar to those in humans and other terrestrial mammals. The low-to-moderate levels of TTS that have been induced in captive odontocetes and pinnipeds during recent controlled studies of TTS have been confirmed to be temporary, with no measurable

residual PTS (Kastak *et al.*, 1999; Schlundt *et al.*, 2000; Finneran *et al.*, 2002; Nachtigall *et al.*, 2003). In terrestrial mammals, the received sound level from a single non-impulsive sound exposure must be far above the TTS threshold for any risk of permanent hearing damage (Kryter, 1994; Richardson *et al.*, 1995). For impulse sounds with very rapid rise times (e.g., those associated with explosions or gunfire), a received level not greatly in excess of the TTS threshold may start to elicit PTS. Rise times for airgun pulses are rapid, but less rapid than for explosions.

Some factors that contribute to onset of PTS are as follows: (1) exposure to single very intense noises, (2) repetitive exposure to intense sounds that individually cause TTS but not PTS, and (3) recurrent ear infections or (in captive animals) exposure to certain drugs.

Cavanagh (2000) reviewed the thresholds used to define TTS and PTS. Based on his review and SACLANT (1998), it is reasonable to assume that PTS might occur at a received sound level 20 dB or more above that which induces mild TTS. However, for PTS to occur at a received level only 20 dB above the TTS threshold, it is probable that the animal would have to be exposed to the strong sound for an extended period.

Sound impulse duration, peak amplitude, rise time, and number of pulses are the main factors thought to determine the onset and extent of PTS. Ketten (1994) noted that the criteria for differentiating the sound pressure levels that result in PTS (or TTS) are location and species-specific. PTS effects may also be influenced strongly by the health of the receiver's ear.

Given that marine mammals are unlikely to be exposed to received levels of seismic pulses that could cause TTS, it is highly unlikely that they would sustain permanent hearing impairment. If we assume that the TTS threshold for odontocetes for exposure to a series of seismic pulses may be on the order of 220 dB re 1 microPa (pk-pk) (approximately 204 dB re 1 microPa rms), then the PTS threshold might be about 240 dB re 1 microPa (pk-pk). In the units used by geophysicists, this is 10 bar-m. Such levels are found only in the immediate vicinity of the largest airguns (Richardson *et al.*, 1995; Caldwell and Dragoset, 2000). However, it is very unlikely that an odontocete would remain within a few meters of a large airgun for sufficiently long to incur PTS. The TTS (and thus PTS) thresholds of baleen whales and pinnipeds may be lower, and thus may extend to a somewhat greater distance from the source. However, baleen whales generally avoid the immediate area around operating seismic vessels, so it is unlikely that a baleen whale could incur PTS from exposure to airgun pulses. Some pinnipeds do not show strong avoidance of operating airguns. In summary, it is highly unlikely that marine mammals could receive sounds strong enough (and over a sufficient period of time) to cause permanent hearing impairment during this project. In the proposed project marine mammals are unlikely to be exposed to received levels of seismic pulses strong enough to cause TTS, and because of the higher level of sound necessary to cause PTS, it is even less likely that PTS could occur. This is due to the fact that even levels immediately adjacent to the 2 GI-airguns may not be sufficient to induce PTS because the mammal would not be exposed to more than one strong pulse unless it swam alongside an airgun for a period of time.

Strandings and Mortality

Marine mammals close to underwater detonations of high explosives can be killed or severely injured, and the auditory organs are especially susceptible to injury (Ketten *et al.*, 1993; Ketten, 1995). Airgun pulses are less energetic and have slower rise times. While there is no documented evidence that airgun arrays can cause serious injury, death, or stranding, the association of mass strandings of beaked whales with naval exercises and an L-DEO seismic survey in 2002 have raised the possibility that beaked whales may be especially susceptible to injury and/or stranding when exposed to strong pulsed sounds. Information on recent beaked whale strandings may be found in Appendix A of the Scripps application and in several previous **Federal Register** documents (see 69 FR 31792 (June 7, 2004) or 69 FR 34996 (June 23, 2004)). Reviewers are encouraged to read these documents for additional information.

It is important to note that seismic pulses and mid-frequency sonar pulses are quite different. Sounds produced by the types of airgun arrays used to profile sub-sea geological structures are broadband with most of the energy below 1 kHz. Typical military mid-frequency sonars operate at frequencies of 2 to 10 kHz, generally with a relatively narrow bandwidth at any one time (though the center frequency may change over time). Because seismic and sonar sounds have considerably different characteristics and duty cycles, it is not appropriate to assume that there is a direct connection between the effects of military sonar and seismic surveys on marine mammals. However, evidence that sonar pulses can, in special circumstances, lead to physical damage and, indirectly, mortality suggests that caution is warranted when dealing with exposure of marine mammals to any high-intensity pulsed sound.

In addition to the sonar-related strandings, there was a September, 2002 stranding of two Cuvier's beaked whales in the Gulf of California (Mexico) when a seismic survey by the *R/V Maurice Ewing* was underway in the general area (Malakoff, 2002). The airgun array in use during that project was the *Ewing*'s 20–gun 8490–in^3 array. This might be a first indication that seismic surveys can have effects, at least on beaked whales, similar to the suspected effects of naval sonars. However, the evidence linking the Gulf of California strandings to the seismic surveys is inconclusive, and to date, is not based on any physical evidence (Hogarth, 2002; Yoder, 2002). The ship was also operating its multi-beam bathymetric sonar at the same time but this sonar had much less potential than these naval sonars to affect beaked whales. Although the link between the Gulf of California strandings and the seismic (plus multi-beam sonar) survey is inconclusive, this plus the various incidents involving beaked whale strandings associated with naval exercises suggests a need for caution in conducting seismic surveys in areas occupied by beaked whales. However, the present project will involve a much smaller sound source than used in typical seismic surveys. That, along with the monitoring and mitigation measures planned for this cruise are expected to eliminate any possibility for strandings and mortality.

Non-auditory Physiological Effects

Possible types of non-auditory physiological effects or injuries that might theoretically occur in marine mammals exposed to strong underwater sound might include stress, neurological effects, bubble formation, resonance effects, and other types of organ or tissue damage. There is no evidence that any of these effects occur in marine mammals exposed to sound from airgun arrays (even large ones). However, there have been no direct studies of the potential for airgun pulses to elicit any of these effects. If any such effects do occur, they would probably be limited to unusual situations when animals might be exposed at close range for unusually long periods.

It is doubtful that any single marine mammal would be exposed to strong seismic sounds for sufficiently long that

significant physiological stress would develop. That is especially so in the case of the present project where the airguns are small, the ship's speed is relatively fast (6 knots or approximately 11 km/h), and, except while on a seismic station, the survey lines are widely spaced with little or no overlap.

Gas-filled structures in marine animals have an inherent fundamental resonance frequency. If stimulated at that frequency, the ensuing resonance could cause damage to the animal. There may also be a possibility that high sound levels could cause bubble formation in the blood of diving mammals that in turn could cause an air embolism, tissue separation, and high, localized pressure in nervous tissue (Gisner (ed), 1999; Houser *et al.*, 2001).

In April 2002, a workshop (Gentry [ed.] 2002) was held to discuss whether the stranding of beaked whales in the Bahamas in 2000 (Balcomb and Claridge, 2001; NOAA and USN, 2001) might have been related to air cavity resonance or bubble formation in tissues caused by exposure to noise from naval sonar. A panel of experts concluded that resonance in air-filled structures was not likely to have caused this stranding. Among other reasons, the air spaces in marine mammals are too large to be susceptible to resonant frequencies emitted by mid- or low-frequency sonar; lung tissue damage has not been observed in any mass, multi-species stranding of beaked whales; and the duration of sonar pings is likely too short to induce vibrations that could damage tissues (Gentry (ed.), 2002). Opinions were less conclusive about the possible role of gas (nitrogen) bubble formation/growth in the Bahamas stranding of beaked whales.

Until recently, it was assumed that diving marine mammals are not subject to decompression injury (the bends) or air embolism. However, a short paper concerning beaked whales stranded in the Canary Islands in 2002 suggests that cetaceans might be subject to decompression injury in some situations (Jepson *et al.*, 2003). If so, that might occur if they ascend unusually quickly when exposed to aversive sounds. However, the interpretation that strandings are related to decompression injury is unproven (Piantadosi and Thalmann, 2004; Fernandez *et al.*, 2004). Even if that effect can occur during exposure to mid-frequency sonar, there is no evidence that this type of effect occurs in response to low-frequency airgun sounds. It is especially unlikely in the case of this project involving only two small, low-intensity GI-airguns.

In summary, little is known about the potential for seismic survey sounds to cause either auditory impairment or other non-auditory physical effects in marine mammals. Available data suggest that such effects, if they occur at all, would be limited to short distances from the sound source. However, the available data do not allow for meaningful quantitative predictions of the numbers (if any) of marine mammals that might be affected in these ways. Marine mammals that show behavioral avoidance of seismic vessels, including most baleen whales, some odontocetes, and some pinnipeds, are unlikely to incur auditory impairment or other physical effects. Also, the planned mitigation and monitoring measures are expected to minimize any possibility of serious injury, mortality or strandings.

Possible Effects of Mid-frequency Sonar Signals

A multi-beam bathymetric sonar (Simrad EM120, 11.25–12.6 kHz) and a sub-bottom profiler will be operated from the source vessel essentially continuously during much of the planned survey. Details about these sonars were provided previously in this document.

Navy sonars that have been linked to avoidance reactions and stranding of cetaceans generally: (1) are more powerful than the Simrad EM120 sonar; (2) have a longer pulse duration; and (3) are directed close to horizontally (vs. downward for the Simrad EM120). The area of possible influence of the Simrad EM120 is much smaller--a narrow band oriented in the cross-track direction below the source vessel. Marine mammals that encounter the Simrad EM120 at close range are unlikely to be subjected to repeated pulses because of the narrow fore-aft width of the beam, and will receive only limited amounts of pulse energy because of the short pulses and vessel speed. Therefore, as harassment or injury from pulsed sound is a function of total energy received, the actual harassment or injury threshold for the bathymetric sonar signals would be at a much higher dB level than that for longer duration pulses such as seismic signals. As a result, NMFS believes that marine mammals are unlikely to be harassed or injured from the multibeam sonar.

Masking by Mid-frequency Sonar Signals

Marine mammal communications will not be masked appreciably by the multibeam sonar signals or the sub-bottom profiler given the low duty cycle and directionality of the sonars and the brief period when an individual mammal is likely to be within its beam. Furthermore, in the case of baleen whales, the sonar signals from the Simrad EM120 do not overlap with the predominant frequencies of their calls, which would avoid significant masking.

For the sub-bottom profiler, marine mammal communications will not be masked appreciably because of their relatively low power output, low duty cycle, directionality (for the profiler), and the brief period when an individual mammal may be within the sonar's beam. In the case of most odonotocetes, the sonar signals from the profiler do not overlap with the predominant frequencies in their calls. In the case of mysticetes, the pulses from the pinger do not overlap with their predominant frequencies.

Behavioral Responses Resulting from Mid-Frequency Sonar Signals

Behavioral reactions of free-ranging marine mammals to military and other sonars appear to vary by species and circumstance. Observed reactions have included silencing and dispersal by sperm whales (Watkins *et al.*, 1985), increased vocalizations and no dispersal by pilot whales (Rendell and Gordon, 1999), and the previously-mentioned strandings by beaked whales. Also, Navy personnel have described observations of dolphins bow-riding adjacent to bow-mounted mid-frequency sonars during sonar transmissions. However, all of these observations are of limited relevance to the present situation. Pulse durations from these sonars were much longer than those of the Scripps multibeam sonar, and a given mammal would have received many pulses from the naval sonars. During Scripps' operations, the individual pulses will be very short, and a given mammal would not receive many of the downward-directed pulses as the vessel passes by.

Captive bottlenose dolphins and a white whale exhibited changes in behavior when exposed to 1–sec pulsed sounds at frequencies similar to those that will be emitted by the multi-beam sonar used by Scripps and to shorter broadband pulsed signals. Behavioral changes typically involved what appeared to be deliberate attempts to avoid the sound exposure (Schlundt *et al.*, 2000; Finneran *et al.*, 2002). The relevance of these data to free-ranging odontocetes is uncertain and in any case the test sounds were quite different in either duration or bandwidth as compared to those from a bathymetric sonar.

Scripps and NMFS are not aware of any data on the reactions of pinnipeds

to sonar sounds at frequencies similar to those of the 12.0 kHz frequency of the *Revelle*'s multibeam sonar. Based on observed pinniped responses to other types of pulsed sounds, and the likely short duration of exposure to the bathymetric sonar sounds, pinniped reactions are expected to be limited to startle or otherwise brief responses of no lasting consequences to the individual animals. The pulsed signals from the sub-bottom profiler are much weaker than those from the multibeam sonar and somewhat weaker than those from the 2 GI-airgun array. Therefore, significant behavioral responses are not expected.

Hearing Impairment and Other Physical Effects

Given stranding events that have been associated with the operation of naval sonar, there is much concern that sonar noise can cause serious impacts to marine mammals (for discussion see Effects of Seismic Surveys on Marine Mammals). However, the multi-beam sonars proposed for use by Scripps are quite different than tactical sonars used for navy operations. Pulse duration of the bathymetric sonars is very short relative to the naval sonars. Also, at any given location, an individual marine mammal would be in the beam of the multi-beam sonar for much less time given the generally downward orientation of the beam and its narrow fore-aft beam-width. (Navy sonars often use near-horizontally directed sound.) These factors would all reduce the sound energy received from the multi-beam sonar rather drastically relative to that from the sonars used by the Navy. Therefore, hearing impairment by multi-beam bathymetric sonar is unlikely.

Source levels of the sub-bottom profiler are much lower than those of the airguns and the multi-beam sonar. Sound levels from a sub-bottom profiler similar to the one on the *Revelle* were estimated to decrease to 180 dB re 1 microPa (rms) at 8 m (26 ft) horizontally from the source (Burgess and Lawson, 2000), and at approximately 18 m (59 ft) downward from the source. Furthermore, received levels of pulsed sounds that are necessary to cause temporary or especially permanent hearing impairment in marine mammals appear to be higher than 180 dB (see earlier discussion). Thus, it is unlikely that the sub-bottom profiler produces pulse levels strong enough to cause hearing impairment or other physical injuries even in an animal that is (briefly) in a position near the source.

The sub-bottom profiler is usually operated simultaneously with other higher-power acoustic sources. Many marine mammals will move away in response to the approaching higher-power sources or the vessel itself before the mammals would be close enough for there to be any possibility of effects from the less intense sounds from the sub-bottom profiler. In the case of mammals that do not avoid the approaching vessel and its various sound sources, mitigation measures that would be applied to minimize effects of the higher-power sources would further reduce or eliminate any minor effects of the sub-bottom profiler.

Estimates of Take by Harassment for the SWPO Seismic Survey

Although information contained in this document indicates that injury to marine mammals from seismic sounds potentially occurs at sound pressure levels significantly higher than 180 and 190 dB, NMFS' current criteria for onset of Level A harassment of cetaceans and pinnipeds from impulse sound are, respectively, 180 and 190 re 1 microPa rms. The rms level of a seismic pulse is typically about 10 dB less than its peak level and about 16 dB less than its pk-pk level (Greene, 1997; McCauley *et al.*, 1998; 2000a). The criterion for Level B harassment onset is 160 dB.

Given the proposed mitigation (see Mitigation later in this document), all anticipated effects involve a temporary change in behavior that may constitute Level B harassment. The proposed mitigation measures will minimize or eliminate the possibility of Level A harassment or mortality. Scripps has calculated the ''best estimates'' for the numbers of animals that could be taken by level B harassment during the proposed SWPO seismic survey using data on marine mammal density (numbers per unit area) and estimates of the size of the affected area, as shown in the predicted RMS radii table (see Table 1).

These estimates are based on a consideration of the number of marine mammals that might be exposed to sound levels greater than 160 dB, the criterion for the onset of Level B harassment, by operations with the 2 GI-gun array planned to be used for this project. The anticipated zones of influence of the multi-beam sonar and sub-bottom profiler are less than that for the airguns, so it is assumed that during simultaneous operations of these instruments that any marine mammals close enough to be affected by the multi-beam and sub-bottom profiler sonars would already be affected by the airguns. Therefore, no additional incidental takings are included for animals that might be affected by the multi-beam sonar. Given their characteristics (described previously), no Level B harassment takings are considered likely when the multibeam and sub-bottom profiler are operating but the airguns are silent.

Table 2 provides the best estimate of the numbers of each species that would be exposed to seismic sounds greater than 160 dB and the number of marine mammals requested to be taken by Level B harassment. A detailed description on the methodology used by Scripps to arrive at the estimates of Level B harassment takes that are provided in Table 2 can be found in Scripps's IHA application for the SWPO survey.

BILLING CODE 3510–22–S

TABLE 2. Estimates of the possible numbers of marine mammal exposures to the different sound levels, and the numbers of different individuals that might be exposed, during the proposed SIO seismic surveys the Louisville Ridge in the SW Pacific Ocean during January-February 2006. (Specific Geographic Regions--SPSG = South Pacific Subtropical Gyre; SSTC = South Subtropical Convergence Province (Longhurst (1998)).

Species	Number of Exposures to Sound Levels ≥160 dB (rms)						Number of Individuals Exposed to Sound Levels ≥160 dB (rms)						
	Best Estimate			Maximum Estimate			Best Estimate			Pop'	Maximum		
	SPSG	SSTC	Total	SPSG	SSTC	Total	SPSG	SSTC	Total	n %	SPSG	SSTC	Total
Delphinidae													
Rough-toothed dolphin	19	30	49	36	47	83	18	29	47	0.02	35	45	80
Bottlenose dolphin	38	149	186	72	233	305	36	144	180	0.04	70	225	295
Pantropical spotted dolphin	19	30	49	36	47	83	18	29	47	0.00	35	45	80
Spinner dolphin	4	15	19	7	23	31	4	14	18	0.00	7	22	29
Striped dolphin	4	15	19	7	23	31	4	14	18	0.00	7	22	29
Common dolphin	38	149	186	72	233	305	36	144	180	0.01	70	225	295
Hourglass dolphin	4	15	19	7	23	31	4	14	18	0.01	7	22	29
Fraser's dolphin	11	15	26	22	23	45	11	14	25	0.01	21	22	43
S'n right-whale dolphin	4	45	48	7	70	77	4	43	47	NA	7	67	74
Risso's dolphin	19	74	93	36	117	153	18	72	90	0.05	35	112	147
Melon-headed whale	0	0	0	1	0	1	0	0	0	0.00	1	0	1
Pygmy killer whale	0	0	0	1	0	2	0	0	0	0.00	1	0	1
False killer whale	0	0	1	2	1	3	0	0	1	0.00	2	1	3
Killer whale	1	0	1	3	1	4	1	0	1	0.00	3	1	4
Short-finned pilot whale	1	0	1	5	0	6	1	0	1	0.00	5	0	6
Long-finned pilot whale	0	1	1	1	2	2	0	1	1	0.00	1	2	2
Odontocetes													
Physeteridae													
Sperm whale	0	1	1	1	2	3	0	1	1	0.00	1	2	3
Pygmy sperm whale	2	1	4	12	4	16	2	1	4	NA	11	4	15
Dwarf sperm whale	0	0	0	0	0	0	0	0	0	0	0	0	0
												0	
Ziphiidae												0	
Southern bottlenose whale	0	1	1	0	2	2	0	1	1	0.00	0	2	2
Arnoux's beaked whale	0	0	0	0	1	1	0	0	0	0	0	1	1
Cuvier's beaked whale	0	0	1	1	1	2	0	0	1	0.00	1	1	2
Shepard's beaked whale	0	0	0	0	0	1	0	0	0	0	0	0	1
Andrew's beaked whale	0	0	0	0	0	1	0	0	0	0	0	0	1
Blainville's beaked whale	0	0	1	1	1	2	0	0	1	NA	1	1	2

Ginkgo-t'ed beaked whale	0	0	0	0	0	0	0	0	0	0	0	0	0
Gray's beaked whale	0	0	1	1	1	2	0	0	1	NA	1	1	2
Hector's beaked whale	0	0	0	0	0	0	0	0	0	0	0	0	0
Spade-t'hed beaked whale	0	0	0	0	0	0	0	0	0	0	0	0	0
Strap-t'hed beaked whale	0	0	1	1	1	2	0	0	1	NA	1	1	2
Phocoenidae													
Spectacled porpoise	0	13	13	0	136	136	0	13	13	NA	0	132	132
Mysticetes													
Southern right whale	0	1	1	0	1	1	0	1	1	NA	0	1	1
Pygmy right whale	0	1	1	0	1	1	0	1	1	NA	0	1	1
Humpback whale	0	0	0	0	1	1	0	0	0	0	0	1	1
Minke whale	0	0	0	0	1	1	0	0	0	0	0	1	1
Dwarf minke whale	0	0	0	0	1	1	0	0	0	0	0	1	1
Bryde's whale	0	0	1	0	2	2	0	0	1	0.00	0	2	2
Sei whale	0	1	1	0	2	2	0	1	1	0.01	0	2	2
Fin whale	0	1	1	0	1	1	0	1	1	0.00	0	1	1
Blue whale	0	0	0	0	0	0	0	0	0	0	0	0	0
Pinnipeds													
Southern elephant seal	0	3	3	NA	NA	NA	0	3	3	0.00	0	0	0
Leopard seal	0	5	6	NA	NA	NA	0	5	5	0.00	0	0	0
Crabeater seal	0	3	3	NA	NA	NA	0	3	3	0.00	0	0	0
Antarctic fur seal	0	5	6	NA	NA	NA	0	5	5	0.00	0	0	0
Sub-antarctic fur seal	0	5	6	NA	NA	NA	0	5	5	NA	0	0	0

BILLING CODE 3510–22–C

Conclusions

Effects on Cetaceans

Strong avoidance reactions by several species of mysticetes to seismic vessels have been observed at ranges up to 6–8 km (3.2–4.3 nm) and occasionally as far as 20–30 km (10.8–16.2 nm) from the source vessel. However, reactions at the longer distances appear to be atypical of most species and situations, particularly when feeding whales are involved. Few mysticetes are expected to be encountered during the proposed survey in the ETPO (Table 2) and disturbance effects would be confined to shorter distances given the low-energy acoustic source to be used during this project. In addition, the estimated numbers presented in Table 2 are considered overestimates of actual numbers that may be harassed.

Odontocete reactions to seismic pulses, or at least the reactions of dolphins, are expected to extend to lesser distances than are those of mysticetes. Odontocete low-frequency hearing is less sensitive than that of mysticetes, and dolphins are often seen from seismic vessels. In fact, there are documented instances of dolphins approaching active seismic vessels. However, dolphins as well as some other types of odontocetes sometimes show avoidance responses and/or other changes in behavior when near operating seismic vessels.

Taking into account the small size and the relatively low sound output of the 2 GI-gun array to be used, and the mitigation measures that are planned, effects on cetaceans are generally expected to be limited to avoidance of a small area around the seismic operation and short-term changes in behavior, falling within the MMPA definition of Level B harassment. Furthermore, the estimated numbers of animals potentially exposed to sound levels sufficient to cause appreciable disturbance are very low percentages of the affected populations.

Based on the 160–dB criterion, the best estimates of the numbers of individual cetaceans that may be exposed to sounds ≥160 dB re 1 microPa (rms) represent from 0 to approximately 0.04 percent of the regional SWPO species populations (Table 2). In the case of endangered balaenopterids, it is most likely that no more than 1 humpback, sei, or fin whale will be exposed to seismic sounds ≥160 dB re 1 microPa (rms), based on estimated densities of those species in the survey region. Therefore, Scripps has requested an authorization to expose up to 1 individuals of each of those species to seismic sounds of ≥160 dB during the proposed survey given the possibility of encountering one or more groups. Best estimates of blue whales are that no individuals would be potentially exposed to seismic pulses with received levels ≥160 dB re 1 microPa (rms)(Table 2).

Higher numbers of delphinids may be affected by the proposed seismic surveys, but the population sizes of species likely to occur in the survey area are large, and the numbers potentially affected are small relative to population sizes (Table 2).

Mitigation measures such as controlled speed, course alteration, observers, ramp ups, and shut downs when marine mammals are seen within defined ranges should further reduce short-term reactions, and minimize any effects on hearing. In all cases, the effects are expected to be short-term, with no lasting biological consequence. In light of the type of effects expected and the small percentages of affected stocks of cetaceans, the action is expected to have no more than a negligible impact on the affected species or stocks of cetaceans.

Effects on Pinnipeds

Five pinniped species may be encountered at the survey sites, but their distribution and numbers have not been documented in the proposed survey area. In all likelihood, these species will be in southern feeding areas during the period for this survey. However, to ensure that the Scripps project remains in compliance with the MMPA in the event that a few pinnipeds are encountered, Scripps has requested an authorization to expose up to 3–5 individuals of each of the five pinniped species to seismic sounds with rms levels ≥160 dB re 1 μPa. Therefore, the proposed survey would have, at most, a short-term effect on their behavior and no long-term impacts on individual pinnipeds or their populations. Responses of pinnipeds to acoustic disturbance are variable, but usually quite limited. Effects are expected to be limited to short-term and localized behavioral changes falling within the MMPA definition of Level B harassment. As is the case for cetaceans, the short-term exposures to sounds from the two GI-guns are not expected to result in any long-term consequences for the individuals or their populations and the activity is expected to have no more than a negligible impact on the affected species or stocks of pinnipeds.

Potential Effects on Habitat

The proposed seismic survey will not result in any permanent impact on habitats used by marine mammals, or to the food sources they utilize. The main impact issue associated with the proposed activity will be temporarily elevated noise levels and the associated direct effects on marine mammals.

One of the reasons for the adoption of airguns as the standard energy source for marine seismic surveys was that they (unlike the explosives used in the distant past) do not result in any appreciable fish kill. Various experimental studies showed that airgun discharges cause little or no fish kill, and that any injurious effects were generally limited to the water within a meter or so of an airgun. However, it has recently been found that injurious effects on captive fish, especially on fish hearing, may occur at somewhat greater distances than previously thought (McCauley *et al.*, 2000a,b, 2002; 2003). Even so, any injurious effects on fish would be limited to short distances from the source. Also, many of the fish that might otherwise be within the injury-zone are likely to be displaced from this region prior to the approach of the airguns through avoidance reactions to the approaching seismic vessel or to the airgun sounds as received at distances beyond the injury radius.

Fish often react to sounds, especially strong and/or intermittent sounds of low frequency. Sound pulses at received levels of 160 dB re 1 μPa (peak) may cause subtle changes in behavior. Pulses at levels of 180 dB (peak) may cause noticeable changes in behavior (Chapman and Hawkins, 1969; Pearson *et al.*, 1992; Skalski *et al.*, 1992). It also appears that fish often habituate to repeated strong sounds rather rapidly, on time scales of minutes to an hour. However, the habituation does not endure, and resumption of the disturbing activity may again elicit disturbance responses from the same fish.

Fish near the airguns are likely to dive or exhibit some other kind of behavioral response. This might have short-term impacts on the ability of cetaceans to feed near the survey area. However, only a small fraction of the available habitat would be ensonified at any given time, and fish species would return to their pre-disturbance behavior once the seismic activity ceased. Thus, the proposed surveys would have little impact on the abilities of marine mammals to feed in the area where seismic work is planned. Fish that do not avoid the approaching airguns (probably a small number) may be subject to auditory or other injuries.

Zooplankton that are very close to the source may react to the airgun's shock wave. These animals have an exoskeleton and no air sacs; therefore,

little or no mortality is expected. Many crustaceans can make sounds and some crustacea and other invertebrates have some type of sound receptor. However, the reactions of zooplankton to sound are not known. Some mysticetes feed on concentrations of zooplankton. A reaction by zooplankton to a seismic impulse would only be relevant to whales if it caused a concentration of zooplankton to scatter. Pressure changes of sufficient magnitude to cause this type of reaction would probably occur only very close to the source, so few zooplankton concentrations would be affected. Impacts on zooplankton behavior are predicted to be negligible, and this would translate into negligible impacts on feeding mysticetes.

Potential Effects on Subsistence Use of Marine Mammals

There is no known legal subsistence hunting for marine mammals in the SWPO, so the proposed Scripps activities will not have any impact on the availability of these species or stocks for subsistence users.

Proposed Mitigation

For the proposed seismic survey in the SWPO, Scripps will deploy 2 GI-airguns as an energy source, each with a discharge volume of 45 in^3. The energy from the airguns is directed mostly downward. The directional nature of the airguns to be used in this project is an important mitigating factor. This directionality will result in reduced sound levels at any given horizontal distance as compared with the levels expected at that distance if the source were omnidirectional with the stated nominal source level. Also, the small size of these airguns is an inherent and important mitigation measure that will reduce the potential for effects relative to those that might occur with large airgun arrays. This measure is in conformance with NMFS policy of encouraging seismic operators to use the lowest intensity airguns practical to accomplish research objectives.

The following mitigation measures, as well as marine mammal visual monitoring (discussed later in this document), will be implemented for the subject seismic surveys: (1) Speed and course alteration (provided that they do not compromise operational safety requirements); (2) shut-down procedures; and (3) ramp-up procedures.

Speed and Course Alteration

If a marine mammal is detected outside its respective safety zone (180 dB for cetaceans, 190 dB for pinnipeds) and, based on its position and the relative motion, is likely to enter the safety zone, the vessel's speed and/or direct course may, when practical and safe, be changed to avoid the mammal in a manner that also minimizes the effect to the planned science objectives. The marine mammal activities and movements relative to the seismic vessel will be closely monitored to ensure that the marine mammal does not approach within the safety zone. If the mammal appears likely to enter the safety zone, further mitigative actions will be taken (i.e., either further course alterations or shut down of the airguns).

Shut-down Procedures

Although power-down procedures are often standard operating practice for seismic surveys, power-down is not proposed to be used for this activity because powering down from two guns to one gun would make only a small difference in the 180– or 190–dB radius—probably not enough to allow continued one-gun operations if a mammal came within the safety radius for two guns.

If a marine mammal is detected outside the safety radius but is likely to enter the safety radius, and if the vessel's speed and/or course cannot be changed to avoid having the mammal enter the safety radius, the GI-guns will be shut down before the mammal is within the safety radius. Likewise, if a mammal is already within the safety zone when first detected, the airguns will be shut down immediately.

Following a shut down, airgun activity will not resume until the marine mammal has cleared the safety zone. The animal will be considered to have cleared the safety zone if it: (1) is visually observed to have left the safety zone, or (2) has not been seen within the zone for 15 min in the case of small odontocetes and pinnipeds, or (3) has not been seen within the zone for 30 min in the case of mysticetes and large odontocetes, including sperm, pygmy sperm, dwarf sperm, beaked and bottlenose whales.

During airgun operations following a shut-down whose duration has exceeded these specified limits, the airgun array will be ramped-up gradually. Ramp-up is described later in this document.

Ramp-up Procedure

A ramp-up procedure will be followed when the airguns begin operating after a period without airgun operations. The two GI guns will be added in sequence 5 minutes apart. During ramp-up procedures, the safety radius for the two GI guns will be maintained.

During the day, ramp-up cannot begin from a shut-down unless the entire 180–dB safety radius has been visible for at least 30 minutes prior to the ramp up (i.e., no ramp-up can begin in heavy fog or high sea states).

During nighttime operations, if the entire safety radius is visible using vessel lights and night-vision devices (NVDs) (as may be the case in deep and intermediate waters), then start up of the airguns from a shut down may occur, after completion of the 30–minute observation period.

Comments on past IHAs raised the issue of prohibiting nighttime operations as a practical mitigation measure. However, this is not practicable due to cost considerations and ship time schedules. If the *Revelle* was prohibited from operating during nighttime, each trip could require an additional several days to complete.

If a seismic survey vessel is limited to daylight seismic operations, efficiency would also be much reduced. Without commenting specifically on how that limitation would affect the present project, for seismic operators in general, a daylight-only requirement would be expected to result in one or more of the following outcomes: cancellation of potentially valuable seismic surveys; reduction in the total number of seismic cruises annually due to longer cruise durations; a need for additional vessels to conduct the seismic operations; or work conducted by non-U.S. operators or non-U.S. vessels when in waters not subject to U.S. law.

Marine Mammal Monitoring

Scripps must have at least three visual observers on board the *Revelle*, and at least two must be an experienced marine mammal observer that NMFS has approved in advance of the start of the SWPO cruise. These observers will be on duty in shifts of no longer than 4 hours.

The visual observers will monitor marine mammals and sea turtles near the seismic source vessel during all daytime airgun operations, during any nighttime start-ups of the airguns, and at night whenever daytime monitoring resulted in one or more shut-down situations due to marine mammal presence. During daylight, vessel-based observers will watch for marine mammals and sea turtles near the seismic vessel during periods with shooting (including ramp-ups), and for 30 minutes prior to the planned start of airgun operations after a shut-down.

Use of multiple observers will increase the likelihood that marine

mammals near the source vessel are detected. Revelle bridge personnel will also assist in detecting marine mammals and implementing mitigation requirements whenever possible (they will be given instruction on how to do so), especially during ongoing operations at night when the designated observers are on stand-by and not required to be on watch at all times.

The observer(s) will watch for marine mammals from the highest practical vantage point on the vessel, which is either the bridge or the flying bridge. The observer(s) will systematically scan the area around the vessel with Big Eyes binoculars, reticle binoculars (e.g., 7 X 50 Fujinon) and with the naked eye during the daytime. Laser range-finding binoculars (Leica L.F. 1200 laser rangefinder or equivalent) will be available to assist with distance estimation. The observers will be used to determine when a marine mammal or sea turtle is in or near the safety radii so that the required mitigation measures, such as course alteration and power-down or shut-down, can be implemented. If the GI-airguns are shut down, observers will maintain watch to determine when the animal is outside the safety radius.

Observers will not be on duty during ongoing seismic operations at night; bridge personnel will watch for marine mammals during this time and will call for the airguns to be powered-down or shut-down if marine mammals are observed in or about to enter the safety radii. However, a biological observer must be on standby at night and available to assist the bridge watch if marine mammals are detected at any distance from the *Revelle*. If the 2 GI-airgun is ramped-up at night (see previous section), two marine mammal observers will monitor for marine mammals for 30 minutes prior to ramp-up and during the ramp-up using either deck lighting or NVDs that will be available (ITT F500 Series Generation 3 binocular image intensifier or equivalent).

Post-Survey Monitoring

In addition, the biological observers will be able to conduct monitoring of most recently-run transect lines as the *Revelle* returns along parallel and perpendicular transect tracks (see inset of Figure 1 in the Scripps application). This will provide the biological observers with opportunities to look for injured or dead marine mammals (although no injuries or mortalities are expected during this research cruise).

Passive Acoustic Monitoring (PAM)

Because of the very small zone for potential Level A harassment, Scripps has not proposed to use the PAM system during this cruise.

Summary

Taking into consideration the additional costs of prohibiting nighttime operations and the likely impact of the activity (including all mitigation and monitoring), NMFS has preliminarily determined that the proposed mitigation and monitoring ensures that the activity will have the least practicable impact on the affected species or stocks. Marine mammals will have sufficient notice of a vessel approaching with operating seismic airguns, thereby giving them an opportunity to avoid the approaching array; if ramp-up is required, two marine mammal observers will be required to monitor the safety radii using shipboard lighting or NVDs for at least 30 minutes before ramp-up begins and verify that no marine mammals are in or approaching the safety radii; ramp-up may not begin unless the entire safety radii are visible.

Reporting

Scripps will submit a report to NMFS within 90 days after the end of the cruise, which is currently predicted to occur during January and February, 2006. The report will describe the operations that were conducted and the marine mammals that were detected. The report must provide full documentation of methods, results, and interpretation pertaining to all monitoring tasks. The report will summarize the dates and locations of seismic operations, marine mammal sightings (dates, times, locations, activities, associated seismic survey activities), and estimates of the amount and nature of potential take of marine mammals by harassment or in other ways.

Endangered Species Act (ESA)

Under section 7 of the ESA, the National Science Foundation (NSF), the agency funding Scripps, has begun consultation on the proposed seismic survey. NMFS will also consult on the issuance of an IHA under section 101(a)(5)(D) of the MMPA for this activity. Consultation will be concluded prior to a determination on the issuance of an IHA.

National Environmental Policy Act (NEPA)

The NSF has prepared an EA for the SWPO oceanographic surveys. NMFS is reviewing this EA and will either adopt it or prepare its own NEPA document before making a determination on the issuance of an IHA. A copy of the NSF EA for this activity is available upon request and is available online (see **ADDRESSES**).

Preliminary Conclusions

NMFS has preliminarily determined that the impact of conducting the seismic survey on the Louisville Ridge in the SWPO may result, at worst, in a temporary modification in behavior by certain species of marine mammals. This activity is expected to result in no more than a negligible impact on the affected species or stocks.

For reasons stated previously in this document, this preliminary determination is supported by: (1) the likelihood that, given advance notice through relatively slow ship speed and ramp-up, marine mammals are expected to move away from a noise source that is annoying before it becomes potentially injurious; (2) recent research that indicates that TTS is unlikely (at least in delphinids) until levels closer to 200–205 dB re 1 microPa are reached rather than 180 dB re 1 microPa; (3) the fact that 200–205 dB isopleths would be well within 100 m (328 ft) of the vessel even in shallow water; and (4) the likelihood that marine mammal detection in the safety zone by trained observers is close to 100 percent during daytime and remains high at night to the short distance from the seismic vessel. As a result, no take by injury or death is anticipated, and the potential for temporary or permanent hearing impairment is very low and would be avoided through the incorporation of the proposed mitigation measures mentioned in this document.

While the number of potential incidental harassment takes will depend on the distribution and abundance of marine mammals in the vicinity of the survey activity, the number of potential harassment takings is estimated to be small. In addition, the proposed seismic program will not interfere with any known legal subsistence hunts, since seismic operations will not take place in subsistence whaling and sealing areas and will not affect marine mammals used for subsistence purposes.

Proposed Authorization

NMFS proposes to issue an IHA to Scripps for conducting an oceanographic seismic survey on the Louisville Ridge in the SWPO, provided the previously mentioned mitigation, monitoring, and reporting requirements are incorporated. NMFS has preliminarily determined that the proposed activity would result in the harassment of small numbers of marine

mammals; would have no more than a negligible impact on the affected marine mammal stocks; and would not have an unmitigable adverse impact on the availability of species or stocks for subsistence uses.

Information Solicited

NMFS requests interested persons to submit comments and information concerning this request (see **ADDRESSES**).

Dated: October 7, 2005

James H. Lecky,

Director, Office of Protected Resources, National Marine Fisheries Service.

[FR Doc. 05–20712 Filed 10–14–05; 8:45 am]

BILLING CODE 3510–22–S

DEPARTMENT OF COMMERCE

National Oceanic and Atmospheric Administration

[I.D. 101105B]

Fisheries of the South Atlantic; Research and Monitoring Workshop Supporting Ecosystem Management in the South Atlantic Region

AGENCY: National Marine Fisheries Service (NMFS), National Oceanic and Atmospheric Administration (NOAA), Commerce.

ACTION: Notice of Research and Monitoring Workshop Supporting Ecosystem Management in the South Atlantic Region.

SUMMARY: The South Atlantic Fishery Management Council (Council) will conduct a research and monitoring workshop to support the Council's evolution to ecosystem management in the South Atlantic region in Charleston, SC.

DATES: The workshop will take place November 16–18, 2005. See **SUPPLEMENTARY INFORMATION** for specific dates and times.

ADDRESSES: The workshop will be held at the Town and Country Inn and Conference Center, 2008 Savannah Highway, Charleston, SC 29407, telephone: (800) 334–6660 or (843) 571–1000; fax: (843) 766–9444.

FOR FURTHER INFORMATION CONTACT: Kim Iverson, Public Information Officer, South Atlantic Fishery Management Council, One Southpark Circle, Suite 306, Charleston, SC 29407–4699; telephone: (843) 571–4366 or toll free (866) SAFMC–10; fax: (843) 769–4520; email: *kim.iverson@safmc.net*.

SUPPLEMENTARY INFORMATION: Invited workshop participants will meet from 8:30 a.m. – 5 p.m. on November 16–17, 2005, and from 8:30 a.m. – 12:30 p.m. on November 18, 2005. The workshop is designed to identify priority research and monitoring needs by area of concern for inclusion into the Council's Fishery Ecosystem Plan. Summary outputs from various break-out group sessions will provide a foundation from which the research and monitoring section of the Fishery Ecosystem Plan will be developed. They will also include recommendations supporting the expansion of research programs and enhancement of partnerships among federal and state agencies, universities, and institutions to support the move to ecosystem management.

Although non-emergency issues not contained in this agenda may come before this group for discussion, those issues may not be the subject of formal action during these meetings. Action will be restricted to those issues specifically listed in this notice and any issues arising after publication of this notice that require emergency action under section 305(c) of the Magnuson-Stevens Act, provided the public has been notified of the Council's intent to take final action to address the emergency.

Note: The times and sequence specified in this agenda are subject to change.

Special Accommodations

These meetings are physically accessible to people with disabilities. Requests for auxiliary aids should be directed to the Council office (see **ADDRESSES**) 3 days prior to the meetings.

Dated: October 12, 2005.

Emily Menashes,

Acting Director, Office of Sustainable Fisheries, National Marine Fisheries Service.

[FR Doc. E5–5708 Filed 10–14–05; 8:45 am]

BILLING CODE 3510–22–S

DEPARTMENT OF COMMERCE

National Oceanic and Atmospheric Administration

[I.D. 101205A]

General Advisory Committee to the U.S. Section to the Inter-American Tropical Tuna Commission (IATTC); Meeting Announcement

AGENCY: National Marine Fisheries Service (NMFS), National Oceanic and Atmospheric Administration (NOAA), Commerce.

ACTION: Notice of public meeting.

SUMMARY: NMFS announces the meeting of the General Advisory Committee to the U.S. Section to the IATTC on November 1, 2005.

DATES: The open session of the General Advisory Committee meeting will be held on November 1, 2005, from 10 to 5 pm.

ADDRESSES: The meeting will be held at NMFS, Southwest Fisheries Science Center, Large Conference Room, 8604 La Jolla Shores Drive, La Jolla, CA 92037–1508.

FOR FURTHER INFORMATION CONTACT: J. Allison Routt at (562)980–4019.

SUPPLEMENTARY INFORMATION: In accordance with the Tuna Conventions Act, as amended, the Department of State has appointed a General Advisory Committee to the U.S. Section to the IATTC. The U.S. Section consists of the four U.S. Commissioners to the IATTC and the representative of the Deputy Assistant Secretary of State for Oceans and Fisheries. The Advisory Committee supports the work of the U.S. Section ina solely advisory capacity with respect to U.S. participation in the work of the IATTC, with particular reference to the development of policies and negotiating positions pursued at meetings of the IATTC. NMFS, Southwest Region, administers the Advisory Committee in cooperation with the Department of State.

The General Advisory Committee to the U.S. Section to the IATTC will meet to receive and discuss information on: (1) the results of the June 2005 Annual Meeting of the IATTC, (2) 2005 IATTC activities, (3) recent and upcoming meetings of the IATTC and its working groups, (4) IATTC cooperation with other regional fishery management organizations, and (5) Advisory Committee operational issues. The public will have access to the open session of the meeting.

Special Accommodations

The meeting location is physically accessible to people with disabilities. Requests for sign language interpretation or other auxiliary aids should be directed to Allison Routt at (562) 980–4019 at least 10 days prior to the meeting date.

Dated: October 12, 2005.

Alan D. Risenhoover,

Acting Director, Office of Sustainable Fisheries, National Marine Fisheries Service.

[FR Doc. 05–20714 Filed 10–14–05; 8:45 am]

BILLING CODE 3510–22–S

DEPARTMENT OF COMMERCE

National Oceanic and Atmospheric Administration

[I.D. 101105F]

New England Fishery Management Council; Public Meeting

AGENCY: National Marine Fisheries Service (NMFS), National Oceanic and Atmospheric Administration (NOAA), Commerce.

ACTION: Notice; committee meeting.

SUMMARY: The New England Fishery Management Council's (Council) Groundfish Oversight Committee will meet to consider actions affecting New England fisheries in the exclusive economic zone (EEZ).

DATES: The meeting will be held on Wednesday, November 2, 2005, from 9 a.m. to 5 p.m.

ADDRESSES: The meeting will be held at the Holiday Inn, Peabody, MA 01960; telephone: (978) 535–4600.

Council address: New England Fishery Management Council, 50 Water Street, Mill 2, Newburyport, MA 01950.

FOR FURTHER INFORMATION CONTACT: Paul J. Howard, Executive Director, New England Fishery Management Council; telephone: (978) 465–0492.

SUPPLEMENTARY INFORMATION: The items of discussion in the committee's agenda are as follows:

1. The Groundfish Oversight Committee will meet to continue development of Framework Adjustment 42 to the Northeast Multispecies Fishery Management Plan. The committee will consider changes to management measures that may be necessary in order to achieve the mortality targets of Amendment 13. Based on analyses presented to the Committee in October, additional measures may be needed to reduce mortality for several stocks, including Gulf of Maine cod, Georges Bank cod, Cape Cod/Gulf of Maine yellowtail flounder, Georges Bank yellowtail flounder, Southern New England/Mid-Atlantic yellowtail flounder, Georges Bank winter flounder, Southern New England/Mid-Atlantic winter flounder, and white hake.

2. The Committee may consider changes in days-at sea, gear, closed areas, changes to Special Access Programs(SAPS), or other measures for commercial vessels.

3. They may also consider changes in recreational measures, including bag limits, closed areas, minimum fish sizes, or closed seasons. They will consider extending and/or modifying, as necessary, the Category B (regular) days-at-sea (DAS) Pilot Program. Draft measures text for the framework will be reviewed and adjusted as necessary. The Committee may also discuss a standardized bycatch reporting methodology. A Recreational Advisory Panel report will be provided to assist the Committee's deliberations.

4. Other business may also be discussed. Committee recommendations will be forwarded to the Council at a future date.

Although non-emergency issues not contained in this agenda may come before this group for discussion, those issues may not be the subject of formal action during this meeting. Action will be restricted to those issues specifically identified in this notice and any issues arising after publication of this notice that require emergency action under section 305(c) of the Magnuson-Stevens Fishery Conservation and Management Act, provided the public has been notified of the Council's intent to take final action to address the emergency.

Special Accommodations

This meeting is physically accessible to people with disabilities. Requests for sign language interpretation or other auxiliary aids should be directed to Paul J. Howard (see **ADDRESSES**) at least 5 days prior to the meeting date.

Dated: October 12, 2005.

Emily Menashes,

Acting Director, Office of Sustainable Fisheries, National Marine Fisheries Service.

[FR Doc. E5–5702 Filed 10–14–05; 8:45 am]

BILLING CODE 3510–22–S

DEPARTMENT OF COMMERCE

National Oceanic and Atmospheric Administration

[I.D. 100605E]

New England Fishery Management Council; Public Meeting

AGENCY: National Marine Fisheries Service (NMFS), National Oceanic and Atmospheric Administration (NOAA), Commerce

ACTION: Notice of a public meeting.

SUMMARY: The New England Fishery Management Council (Council) is scheduling a public meeting of its Recreational Fishing Advisory Panel in November, 2005 to consider actions affecting New England fisheries in the exclusive economic zone (EEZ). Recommendations from this group will be brought to the full Council for formal consideration and action, if appropriate.

DATES: The meeting will be held on Tuesday, November 1, 2005 at 9:30 a.m.

ADDRESSES: The meeting will be held at the Holiday Inn, One Newbury Street, Peabody, MA 01960; telephone: (978) 535–4600; fax: (978) 535–8248.

Council address: New England Fishery Management Council, 50 Water Street, Mill 2, Newburyport, MA 01950.

FOR FURTHER INFORMATION CONTACT: Paul J. Howard, Executive Director, New England Fishery Management Council; telephone: (978) 465–0492.

SUPPLEMENTARY INFORMATION: The Advisors will meet to review recreational measures for Framework 42 and prepare comments for the Groundfish Committee meeting scheduled for November 2, 2005.

Although non-emergency issues not contained in this agenda may come before this group for discussion, those issues may not be the subject of formal action during this meeting. Action will be restricted to those issues specifically listed in this notice and any issues arising after publication of this notice that require emergency action under section 305(c) of the Magnuson-Stevens Act, provided the public has been notified of the Council's intent to take final action to address the emergency.

Special Accommodations

This meeting is physically accessible to people with disabilities. Requests for sign language interpretation or other auxiliary aids should be directed to Paul J. Howard, Executive Director, at (978) 465–0492, at least 5 days prior to the meeting date.

Dated: October 12, 2005.

Emily Menashes,

Acting Director, Office of Sustainable Fisheries, National Marine Fisheries Service.

[FR Doc. E5–5711 Filed 10–14–05; 8:45 am]

BILLING CODE 3510–22–S

DEPARTMENT OF COMMERCE

National Oceanic and Atmospheric Administration

[I.D.101105E]

South Atlantic Fishery Management Council; Public Hearings

AGENCY: National Marine Fisheries Service (NMFS), National Oceanic and Atmospheric Administration, Commerce.

ACTION: Notice of public hearings.

SUMMARY: The South Atlantic Fishery Management Council (Council) will convene a series of 10 public hearings regarding Amendment 13C to the Snapper Grouper Fishery Management Plan. Amendment 13C is intended to

eliminate or phase out overfishing of snowy grouper, golden tilefish, vermilion snapper, and black sea bass; and increase red porgy harvest consistent with the red porgy rebuilding plan. The underlying need of the amendment is to end overfishing while achieving optimum yield from each fishery through the implementation of new or modification of existing regulations. To address overfishing, the Council is proposing regulations that can be implemented in early 2006, with provisions to allow for a year-round fishery to occur. More specifically, the Council is considering, for the commercial sector, new or adjusted: catch quotas, size limits, trip limits, seasonal closures, fishing year start dates, and gear restrictions. Management measures for the recreational sector would include new or adjusted: catch allocations, bag limits, size limits, and seasonal closures.

DATES: The public hearings will be held during November - December 2005. Written comments must be received in the Council office by close of business on November 28, 2005. See **SUPPLEMENTARY INFORMATION** for the specific dates and times of the public hearings.

ADDRESSES: Written comments should be sent to Bob Mahood, Executive Director, South Atlantic Fishery Management Council, One Southpark Circle, Suite 306, Charleston, SC 29407–4699, or via email to *snappergroupercomments@safmc.net*. Copies of the Public Hearing Document are available from Kim Iverson, South Atlantic Fishery Management Council, One Southpark Circle, Suite 306, Charleston, SC 29407–4699; telephone: (843) 571–4366 or toll free at (866) SAFMC–10.

FOR FURTHER INFORMATION CONTACT: Kim Iverson, South Atlantic Fishery Management Council, One Southpark Circle, Suite 306, Charleston, SC 29407–4699; telephone: (843) 571–4366; fax: (843) 769–4520; email address: *kim.iverson@safmc.net*.

SUPPLEMENTARY INFORMATION: Public hearing dates and locations. Hearings are scheduled to begin at 6 pm.

- November 7, 2005, Sombrero Resort & Lighthouse Marina, 19 Sombrero Boulevard, Marathon, FL 33050, Phone: (305) 743–2250;
- November 8, 2005, Irelands Inn Beach Resort, 2220 N. Atlantic Blvd., Ft. Lauderdale, FL 33305, Phone: (954) 565–6661;
- November 9, 2005, Radisson Resort at the Port, 8701 Astronaut Boulevard, Cape Canaveral, FL 32920, Phone: (321) 784–0000;
- November 9, 2005, Ramada Plaza Resort, 1701 S. Virginia Dare Trail, Kill Devil Hills, NC 27948, Phone: (252) 441–2151;
- November 10, 2005, Holiday Inn Sunspree Resort, 1617 N. 1st Street, Jacksonville Beach, FL 32250, Phone: (904) 249–9071;
- November 10, 2005, Leon Mann, Jr. Enrichment Center, 3820 Galantis Drive, Morehead City, NC 28557, Phone: (252) 247–2626;
- November 14, 2005, Holiday Inn West, 101 Outlet Boulevard, Myrtle Beach, SC 29579, Phone: (843) 236–1000;
- November 16, 2005, Town and Country Inn, 2008 Savannah Highway, Charleston, SC 29407, Phone: (843) 571–1000;
- December 5, 2005, Courtyard Marriott, 100 Charlotte Avenue, Carolina Beach, NC 28428, Phone: (910) 458–2030;

Special Accommodations

These meetings are physically accessible to people with disabilities. Requests for sign language interpretation or other auxiliary aids should be directed to the Council office (see **ADDRESSES**) by November 3, 2005.

Dated: October 12, 2005.

Emily Menashes,

Acting Director, Office of Sustainable Fisheries, National Marine Fisheries Service.

[FR Doc. E5–5707 Filed 10–14–05; 8:45 am]

BILLING CODE 3510–22–S

DEPARTMENT OF COMMERCE

National Oceanic and Atmospheric Administration

[I.D. 101105A]

Fisheries of the South Atlantic; South Atlantic Fishery Management Council, King and Spanish Mackerel Advisory Panel Meeting

AGENCY: National Marine Fisheries Service (NMFS), National Oceanic and Atmospheric Administration (NOAA), Commerce.

ACTION: Notice of South Atlantic Fishery Management Council's King and Spanish Mackerel Advisory Panel will hold a meeting via conference call.

SUMMARY: The South Atlantic Fishery Management Council (SAFMC) will hold a meeting of its King and Spanish Mackerel Advisory Panel (AP) via conference call to address: (1) Amendment 17 to the Coastal Migratory Pelagic Resources (Mackerel) Fishery Management Plan for the Gulf of Mexico and South Atlantic, and (2) the coastal migratory pelagics resources component of Generic Amendment 3 for Addressing Essential Fish Habitat (EFH) Requirements, Habitat Areas of Particular Concern (HAPC), and Adverse Effects of Fishing in the Following Fishery Management Plans of the Gulf of Mexico: Shrimp, Red Drum, Reef Fish, Stone Crab, Coral and Coral Reefs in the Gulf of Mexico, and Spiny Lobster and the Coastal Migratory Pelagic Resources of the Gulf of Mexico and South Atlantic. Amendment 17 addresses the current charter/headboat permit moratorium for the Gulf of Mexico fishery. See **SUPPLEMENTARY INFORMATION**.

DATES: The meeting will take place November 3, 2005. See **SUPPLEMENTARY INFORMATION**.

ADDRESSES: The meeting will be held via conference call. Public listening stations will be available at 5 locations. See **SUPPLEMENTARY INFORMATION**.

FOR FURTHER INFORMATION CONTACT: Kim Iverson, Public Information Officer, South Atlantic Fishery Management Council, One Southpark Circle, Suite 306, Charleston, SC 29407–4699; phone: (843) 571–4366 or toll free (866) SAFMC–10; fax: (843) 769–4520; e-mail: *kim.iverson@safmc.net*.

SUPPLEMENTARY INFORMATION: The South Atlantic Fishery Management Council will convene its King and Spanish Mackerel AP via conference call to review: (1)Amendment 17 to the Coastal Migratory Pelagic Resources (Mackerel) Fishery Management Plan (FMP) for the Gulf of Mexico and South Atlantic FMP, and (2) the coastal migratory pelagic component of Generic Amendment 3 for Addressing EFH Requirements, HAPC, and Adverse Effects of Fishing in the Following Fishery Management Plans of the Gulf of Mexico: Shrimp, Red Drum, Reef Fish, Stone Crab, Coral and Coral Reefs in the Gulf of Mexico, and Spiny Lobster and the Coastal Migratory Pelagic Resources of the Gulf of Mexico and South Atlantic. Under the Coastal Migratory Pelagic Resources FMP, the South Atlantic Fishery Management Council and Gulf of Mexico Fishery Management Council are jointly responsible the management of coastal migratory pelagic species. The Gulf Council's Generic Amendment 3 will amend the Coastal Migratory Pelagic Resources FMP.

Amendment 17 addresses the continuance of the charter/headboat permit moratorium for coastal migratory pelagic species currently in place in the Gulf of Mexico fishery. On May 6, 2003, NOAA's National Marine Fisheries

Service approved Amendment 14 to the Coastal Migratory Pelagics FMP, establishing the charter vessel/headboat permit moratorium in the Gulf of Mexico for the Coastal Migratory Pelagic fishery. Implemented on June 16, 2003, the intended effect of the amendment was to cap the number of for-hire vessels operating in the fishery at the levels that existed as of March 29, 2001 while the Councils evaluated whether a limited access program was needed to permanently constrain effort. The moratorium is set to expire June 16, 2006. In Amendment 17, the Councils are considering whether to let the moratorium expire, extend the moratorium for a finite time period (5 or 10 years), or establish an indefinite limited access program. The Gulf of Mexico Council has selected as its preferred alternative to establish an indefinite limited access program. The South Atlantic Fishery Management Council has not taken action.

Generic Amendment 3 contains proposed alternatives to define EFH for the Coastal Migratory Pelagic Resources Fishery Management Plan.

The South Atlantic Fishery Management Council will consider any recommendations developed by the King and Spanish Mackerel Advisory Panel and take final action on Amendment 17 and Generic Amendment 3 at its December 5–9, 2005 meeting in Carolina Beach, NC.

The meeting will be held via conference call on November 3, 2005, at 1 p.m. and conclude no later than 3 p.m. Listening stations will be available at the following locations:

1. South Atlantic Fishery Management Council, One Southpark Circle, Suite 306, Charleston, SC 29407–4699;
2. The Gulf of Mexico Fishery Management Council, 2203 North Lois Avenue, Suite 1100, Tampa, FL 33607;
3. NOAA's National Marine Fisheries Service, Southeast Regional Office, 263 13th Avenue South, St. Petersburg, FL 33701;
4. NOAA's National Marine Fisheries Service, Southeast Fisheries Science Center, 73 Virginia Beach Drive, Miami, FL 33149; and
5. Florida Fish and Wildlife Conservation Commission, 2796 Overseas Highway, Suite 119, Marathon, FL 33050.

Although other non-emergency issues not on the agenda may come before the AP for discussion, those issues may not be the subject of formal action during this meeting. Actions of the AP will be restricted to those issues specifically identified in this notice and any issues arising after publication of this notice that require emergency action under Section 305(c) of the Magnuson-Stevens Fishery Conservation and Management Act, provided the public has been notified of the Council's intent to take action to address the emergency. The times and sequence specified in this agenda are subject to change.

Special Accommodations

These meetings are physically accessible to people with disabilities. Requests for auxiliary aids should be directed to the Council office(see **ADDRESSES**) 5 days prior to the meetings.

Dated: October 12, 2005.

Emily Menashes,

Acting Director, Office of Sustainable Fisheries, National Marine Fisheries Service.

[FR Doc. E5–5709 Filed 10–14–05; 8:45 am]

BILLING CODE 3510–22–S

DEPARTMENT OF DEFENSE

Notice of the Defense Acquisition Performance Assessment Project Meetings

AGENCY: Department of Defense.

ACTION: Notice; correction.

SUMMARY: On Friday, September 30, 2005 (70 FR 57256), the Department of Defense published a Notice of the Defense Acquisition Performance Assessment Project Meetings. This notice is published to correct the date in Column 1 from ''October 29, 2005'' to ''October 19, 2005''. All other information remain unchanged.

FOR FURTHER INFORMATION CONTACT: Lt. Col. Rene Bergeron, Assistant Director of Staff, Defense Acquisition Performance Assessment Project, 1670 Air Force Pentagon, Rm 3A873, Washington DC 20310–1010; Telephone: (703) 697–3420; Fax: (703) 697–3511; *rene.bergeron@pentagon.af.mil*

Dated: October 11, 2005.

L.M. Bynum,

Alternate OSD Federal Register Liaison Officer, Department of Defense.

[FR Doc. 05–20694 Filed 10–14–05; 8:45 am]

BILLING CODE 5001–06–M

DEPARTMENT OF EDUCATION

Notice of Proposed Information Collection Requests

AGENCY: Department of Education.

SUMMARY: The Director, Regulatory Information Management Services, Office of the Chief Information Officer, invites comments on the proposed information collection requests as required by the Paperwork Reduction Act of 1995.

DATES: Interested persons are invited to submit comments on or before December 16, 2005.

SUPPLEMENTARY INFORMATION: Section 3506 of the Paperwork Reduction Act of 1995 (44 U.S.C. Chapter 35) requires that the Office of Management and Budget (OMB) provide interested Federal agencies and the public an early opportunity to comment on information collection requests. OMB may amend or waive the requirement for public consultation to the extent that public participation in the approval process would defeat the purpose of the information collection, violate State or Federal law, or substantially interfere with any agency's ability to perform its statutory obligations. The Director, Regulatory Information Management Services, Office of the Chief Information Officer, publishes that notice containing proposed information collection requests prior to submission of these requests to OMB. Each proposed information collection, grouped by office, contains the following: (1) Type of review requested, e.g. new, revision, extension, existing or reinstatement; (2) Title; (3) Summary of the collection; (4) Description of the need for, and proposed use of, the information; (5) Respondents and frequency of collection; and (6) Reporting and/or Recordkeeping burden. OMB invites public comment.

The Department of Education is especially interested in public comment addressing the following issues: (1) Is this collection necessary to the proper functions of the Department; (2) will this information be processed and used in a timely manner; (3) is the estimate of burden accurate; (4) how might the Department enhance the quality, utility, and clarity of the information to be collected; and (5) how might the Department minimize the burden of this collection on the respondents, including through the use of information technology.

Dated: October 11, 2005.

Jeanne Van Vlandren,

Director, Regulatory Information Management Services, Office of the Chief Information Officer.

Institute of Education Sciences

Type of Review: New.

Title: Study of Teacher Preparation in Early Reading Instruction.

Frequency: One time.

Affected Public: Businesses or other for-profit; individuals or household.

Reporting and Recordkeeping Hour Burden:

Responses: 2,100.

Burden Hours: 8,000.

Abstract: The Study of Teacher Preparation in Early Reading Instruction will assess the extent to which school of education coursework related to elementary reading is aligned with the National Reading Panel (NRP) Report as well as assess new teachers' preparation to teach the five essential components of reading as identified by the NRP report and specified in the Reading First program statute.

Requests for copies of the proposed information collection request may be accessed from *http://edicsweb.ed.gov,* by selecting the ''Browse Pending Collections'' link and by clicking on link number 2904. When you access the information collection, click on ''Download Attachments'' to view. Written requests for information should be addressed to U.S. Department of Education, 400 Maryland Avenue, SW., Potomac Center, 9th Floor, Washington, DC 20202–4700. Requests may also be electronically mailed to the Internet address *OCIO_RIMG@ed.gov* or faxed to 202–245–6621. Please specify the complete title of the information collection when making your request.

Comments regarding burden and/or the collection activity requirements should be directed to Kathy Axt at her e-mail address *Kathy.Axt@ed.gov.* Individuals who use a telecommunications device for the deaf (TDD) may call the Federal Information Relay Service (FIRS) at 1–800–877–8339.

[FR Doc. 05–20669 Filed 10–14–05; 8:45 am]

BILLING CODE 4000–01–P

DEPARTMENT OF ENERGY

Office of Fossil Energy; Procedural Order Requiring Monthly Reporting

AGENCY: Office of Fossil Energy (FE), Department of Energy (DOE).

ACTION: Notice of amendment to Natural Gas Import and Export Orders.

SUMMARY: DOE is adding a new monthly reporting requirement to existing and future Orders authorizing the import and export of natural gas and liquefied natural gas (LNG).

FOR FURTHER INFORMATION CONTACT: Yvonne Caudillo, Allyson C. Reilly, Office of Natural Gas Regulatory Activities, Office of Oil and Gas Global Security and Supply, Office of Fossil Energy, P.O. Box 44375, Washington, DC 20026–4375, (202) 586–4587, (202) 586–9394.

SUPPLEMENTARY INFORMATION: DOE's Office of Fossil Energy (FE) is delegated the authority to regulate natural gas imports and exports under section 3 of the Natural Gas Act of 1938, 15 U.S.C. 717b. In order to carry out its delegated responsibility, FE requires those persons authorized to import or export natural gas to file reports containing basic information about the scope and nature of the import or export activity. Historically, FE has collected information on a quarterly basis about import and export transactions. That information has been used to monitor North American natural gas trade, which in turn enables the Federal Government to perform market and regulatory analyses; improve the capability of industry and the government to respond to any future energy-related supply problems; and keep the general public informed of international natural gas trade.

DOE has undertaken a Natural Gas Data Collection Initiative to improve the way it gathers and disseminates information about the use and origin of natural gas supplies in the United States. This critical natural gas information will be collected on a monthly basis in addition to the reporting required at the end of each calendar quarter. To facilitate timely reporting, an internet-based reporting option for the monthly reporting has been established. This may be found on the FE Web site at *http://www.fe.doe.gov* (click on natural gas regulation then on the upper right side in the blue, click on monthly report).

On July 21, 2003, DOE's Energy Information Administration published a **Federal Register** notice requesting public comment on the proposal to collect import and export data on a monthly basis (68 FR 43101). No comments or requests for further information were received.

Order

In accordance with DOE's Natural Gas Data Collection Initiative and pursuant to section 3 of the Natural Gas Act, it is ordered that:

All importers and exporters with existing authorizations listed in the attached Appendix shall file a report within 30 days following each calendar month, indicating whether imports and/or exports have been made. Monthly reports must be filed whether or not initial deliveries have begun. If imports and/or exports have not been made, a report of ''no activity'' for that month must be filed. If imports and/or exports have occurred, the report must give the following details: (1) For imports, country of origin; (2) for exports, the country of destination; (3) point(s) of entry and/or exit; and (4) total volume at each point of entry and/or exit for the month. Additionally, for LNG imports and exports the reports must give the following details: (1) Country of origin; (2) point(s) of entry/exit—terminal name; (3) the name(s) of the LNG tanker or number of trucks; (4) landed price in U.S. $ per MMBtu; (5) supplier; (6) total volume in MCF; and (7) the date of import (arrival of ship). [OMB NO.: 1901–0294]

The first monthly report for the reporting period November 1, 2005, through November 30, 2005, required by this Amending Order shall be filed no later than December 30, 2005. All monthly filings shall be made to U.S. Department of Energy, Office of Oil and Gas Global Security and Supply, Attention: Ms. Yvonne Caudillo, P.O. Box 44375, Washington, DC 20026–4375, or on the web site as discussed above.

Issued in Washington, DC, October 11, 2005.

R.F. Corbin,

Manager, Natural Gas Regulatory Activities, Office of Oil and Gas Global Security and Supply, Office of Fossil Energy.

ATTACHMENT

Docket No.	Order No.	Company name
86–25–NG	140# Std	Great Lakes Gas Transmission Limited Partnership.
86–44–NG	368# Std	Brooklyn Union Gas Company, et al.
86–44–NG	368A Std	Brooklyn Union Gas Company, et al.
86–44–NG	368B Std	Brooklyn Union Gas Company, et al.
86–44–NG	368D Std	Brooklyn Union Gas Company, et al.
86–44–NG	368E Std	Brooklyn Union Gas Company, et al.
86–44–NG	368H Std	Brooklyn Union Gas Company, et al.
86–45–NG	368# Std	Brooklyn Union Gas Company, et al.
86–45–NG	368A Std	Brooklyn Union Gas Company, et al.

ATTACHMENT—Continued

Docket No.	Order No.	Company name
86–45–NG	368B Std	Brooklyn Union Gas Company, et al.
86–45–NG	368D Std	Brooklyn Union Gas Company, et al.
86–45–NG	368E Std	Brooklyn Union Gas Company, et al.
86–46–NG	368# Std	Brooklyn Union Gas Company, et al.
86–46–NG	368A Std	Brooklyn Union Gas Company, et al.
86–46–NG	368B Std	Brooklyn Union Gas Company, et al.
86–46–NG	368D Std	Brooklyn Union Gas Company, et al.
86–46–NG	368E Std	Brooklyn Union Gas Company, et al.
86–48–NG	368# Std	Brooklyn Union Gas Company, et al.
86–48–NG	368A Std	Brooklyn Union Gas Company, et al.
86–48–NG	368B Std	Brooklyn Union Gas Company, et al.
86–48–NG	368C Std	Brooklyn Union Gas Company, et al.
86–48–NG	368D Std	Brooklyn Union Gas Company, et al.
86–48–NG	368E Std	Brooklyn Union Gas Company, et al.
86–48–NG	368H Std	Brooklyn Union Gas Company, et al.
86–48–NG	425# Std	Brooklyn Union Gas Company, et al.
87–2–NG	368# Std	Brooklyn Union Gas Company, et al.
87–2–NG	368A Std	Brooklyn Union Gas Company, et al.
87–2–NG	368B Std	Brooklyn Union Gas Company, et al.
87–2–NG	368D Std	Brooklyn Union Gas Company, et al.
87–2–NG	368E Std	Brooklyn Union Gas Company, et al.
87–2–NG	368H Std	Brooklyn Union Gas Company, et al.
87–2–NG	368I Std	Brooklyn Union Gas Company, et al.
87–40–NG	272# Std	Pan-Alberta Gas (U.S.) Inc.
87–40–NG	1009A Std	Pan-Alberta Gas (U.S.) Inc.
88–1–NG 01	01 Pro	Project Orange Associates, L.P.
88–1–NG	274# Cnd	Project Orange Associates, L.P.
88–1–NG	274A Std	Project Orange Associates, L.P.
88–1–NG	425# Std	Project Orange Associates, L.P.
88–1–NG	500# Std	Project Orange Associates, L.P.
88–1–NG	500A Std	Project Orange Associates, L.P.
88–1–NG	500B Std	Project Orange Associates, L.P.
88–22–LNG	261# Std	Phillips Alaska Natural Gas Corp. & Marathon Oil Co.
88–22–LNG	261E Std	Marathon Oil Company.
88–22–LNG	261F Std	Phillips Alaska Natural Gas Corp. & Marathon Oil Co.
88–31–NG	264# Std	Great Lakes Gas Transmission Limited Partnership.
88–38–NG	284# Std	Consumers Power Company.
88–38–NG	284A Std	Consumers Power Company.
88–39–NG	305# Cnd	Midland Cogeneration Venture Ltd. Partnership.
88–39–NG	305A Std	Midland Cogeneration Venture Ltd. Partnership.
88–52–NG	375# Std	Southeastern Michigan Gas Company.
88–56–NG	276# Std	Great Lakes Gas Transmission Limited Partnership.
88–56–NG	276A Std	Great Lakes Gas Transmission Limited Partnership.
88–64–NG	358# Std	Boundary Gas, Inc.
88–64–NG	1155# Std	Boundary Gas, Inc.
89–12–NG	332# Std	Centra Gas Ontario Inc.
89–16–LNG	322# Std	Distrigas Corporation.
89–24–NG	352# Cnd	Consolidated Edison Company of New York, Inc.
89–24–NG	425# Std	Consolidated Edison Company of New York, Inc.
89–26–NG	381# Cnd	Texas Eastern Transmission Corporation et al.
89–26–NG	425# Std	Texas Eastern Transmission Corporation et al.
89–26–NG	425A Std	Texas Eastern Transmission Corporation et al.
89–26–NG	979# Std	Texas Eastern Transmission Corporation et al.
89–33–NG	351# Cnd	Niagara Mohawk Power Corporation.
89–33–NG	351A Std	Niagara Mohawk Power Corporation.
89–54–NG	446# Std	Orchard Gas Corporation.
89–55–NG	447# Std	Selkirk Cogeneration Partners, L.P.
89–75–NG	426# Std	Transco Energy Marketing Company.
89–76–NG	448# Std	Pawtucket Power Associates Limited Partnership.
89–76–NG	892# Std	Pawtucket Power Associates Limited Partnership.
89–76–NG	892A Std	Pawtucket Power Associates Limited Partnership.
90–25–NG	428# Std	Elizabethtown Gas Company.
90–51–NG	439# Std	Centra Gas Ontario Inc.
90–51–NG	439A Std	Centra Gas Ontario Inc.
90–80–NG	622# Cnd	Dartmouth Power Associates, L.P.
90–80–NG	622A Std	Dartmouth Power Associates, L.P.
90–80–NG	622B Std	Dartmouth Power Associates, L.P.
90–92–NG	494# Cnd	Sumas Cogeneration Company, L.P.
90–92–NG	494A Std	Sumas Cogeneration Company, L.P.
90–92–NG	494B Std	Sumas Cogeneration Company, L.P.
90–92–NG	494C Std	Sumas Cogeneration Company, L.P.
90–92–NG	494D Std	Sumas Cogeneration Company, L.P.

ATTACHMENT—Continued

Docket No.	Order No.	Company name
90–92–NG	494E Std	Sumas Cogeneration Company, L.P.
91–10–LNG	261A Std	Phillips Alaska Natural Gas Corp. & Marathon Oil Co.
91–34–NG	536# Std	Transcanada Pipelines Limited.
91–42–NG	662# Std	Lockport Energy Associates, L.P.
91–54–NG	550# Std	Vermont Gas Systems, Inc.
91–54–NG	550A Std	Vermont Gas Systems, Inc.
91–54–NG	550B Std	Vermont Gas Systems, Inc.
91–87–NG	446A Std	Orchard Gas Corporation.
91–92–NG	368H Std	Commonwealth Gas Company.
91–92–NG	561# Std	Commonwealth Gas Company.
91–92–NG	561A Std	Commonwealth Gas Company.
91–116–NG	736# Std	Encogen Northwest, L.P.
92–13–NG	756# Std	Selkirk Cogeneration Partners, L.P.
92–13–NG	756A Std	Selkirk Cogeneration Partners, L.P.
92–24–NG	690# Std	Salmon Resources Ltd.
92–24–NG	690A Std	Salmon Resources Ltd.
92–47–NG	743# Std	New York State Electric & Gas Corporation.
92–70–NG	725# Std	Saranac Power Partners, L.P.
93–9–NG	780# Std	Portal Municipal Gas.
93–15–NG	771# Std	TM Star Fuel Company.
93–34–NG	795# Std	Transcanada Pipelines Limited.
93–34–NG	795A Std	Transcanada Pipelines Limited.
93–42–NG	368F Std	Brooklyn Union Gas Company, et al.
93–85–NG	857# Std	Granite State Gas Transmission, Inc.
93–85–NG	857A Std	Granite State Gas Transmission, Inc.
93–120–NG	892# Std	Pawtucket Power Associates Limited Partnership.
94–7–NG	929# Std	Brooklyn Navy Yard Cogeneration Partners, L.P.
94–7–NG	929A Std	Brooklyn Navy Yard Cogeneration Partners, L.P.
94–7–NG	929B Std	Brooklyn Navy Yard Cogeneration Partners, L.P.
94–31–NG	938# Std	Chevron Natural Gas Services, Inc.
94–43–NG	368G Std	The Brooklyn Union Gas Company et. al.
94–43–NG	368I Std	The Brooklyn Union Gas Company et. al.
94–49–NG	964# Std	Hermiston Generating Company, L.P.
94–49–NG	964A Std	Hermiston Generating Company, L.P. Pacificorp.
94–51–NG	972# Std	United States General Services Administration.
94–64–NG	978# Std	Bay State Gas Company.
94–65–NG	977# Std	Northern Utilities, Inc.
94–81–LNG	261D Std	Phillips Alaska Natural Gas Corp. & Marathon Oil Co.
94–91–LNG	1042# Std	EcoElectrica, L.P.
95–55–NG	1075# Std	Canada Imperial Oil Limited.
95–58–NG	1104# Std	National Steel Corporation.
95–64–NG	1088# Std	Pittsfield Generating Company, L.P.
95–64–NG	1088A Std	Pittsfield Generating Company, L.P.
95–65–NG	1089# Std	Pittsfield Generating Company, L.P.
95–65–NG	1089A Std	Pittsfield Generating Company, L.P.
95–98–NG	305B Std	Midland Cogeneration Venture Ltd. Partnership.
95–100–LNG	1115# Std	Distrigas Corporation.
95–105–NG	1114# Std	Inland Pacific Energy Services Ltd.
95–106–NG	1141# Std	Cascade Natural Gas Corporation.
95–111–NG	1139# Std	Vermont Gas Systems, Inc.
96–2–NG	1151# Std	Hess Energy Inc.
96–2–NG	1151A Std	Hess Energy Inc.; Statoil Energy, Inc.
96–2–NG	1151B Std	Hess Energy Inc.
96–3–NG	1152# Std	Hess Energy Inc.
96–3–NG	1152A Std	Hess Energy Inc.; Statoil Energy, Inc.
96–3–NG	1152B Std	Hess Energy Inc.
96–39–NG	1182# Std	North Canadian Marketing Corporation.
96–54–NG	1195# Std	Bear Paw Energy, L.L.C.
96–54–NG	1195A Std	Bear Paw Energy, L.L.C.
96–60–NG	1197# Std	Progas U.S.A., Inc.
96–60–NG	1197A Std	Progas U.S.A., Inc.
96–60–NG	1197B Std	Progas U.S.A., Inc.
96–61–NG	1198# Std	Progas U.S.A., Inc.
96–61–NG	1198A Std	Progas U.S.A., Inc.
96–65–NG	1206# Std	Progas U.S.A., Inc.
96–65–NG	1206A Std	Progas U.S.A., Inc.
96–73–NG	1220# Std	United States Gypsum Company.
96–82–NG	1254# Std	Engage Energy Canada, L.P.
96–82–NG	1254A Std	Engage Energy Canada, L.P.
96–99–LNG	0 1 Pro	Phillips Alaska Natural Gas Corp. & Marathon Oil Co.
96–99–LNG	0 2 Pro	Phillips Alaska Natural Gas Corp. & Marathon Oil Co.
96–99–LNG	03 Pro	Phillips Alaska Natural Gas Corp. & Marathon Oil Co.

ATTACHMENT—Continued

Docket No.	Order No.	Company name
96–99–LNG	04 Pro	Phillips Alaska Natural Gas Corp. & Marathon Oil Co.
96–99–LNG	261F Std	Phillips Alaska Natural Gas Corp. & Marathon Oil Co.
96–99–LNG	1473# Std	Phillips Alaska Natural Gas Corp. & Marathon Oil Co.
97–28–NG	1266# Std	Duke Energy Trading & Marketing, L.L.C.
97–28–NG	1266A Std	Duke Energy Trading & Marketing, L.L.C.
97–35–NG	1272# Std	United States Gypsum Company.
97–40–NG	1290# Std	CoEnergy Trading Company.
97–41–NG	1280# Std	CoEnergy Trading Company.
97–87–NG	1329# Std	Progas U.S.A., Inc.
97–88–NG	1326# Std	Progas U.S.A., Inc.
97–89–NG	1330# Std	Progas U.S.A., Inc.
97–89–NG	1330A Std	Progas U.S.A., Inc.
97–94–NG	1352# Std	Androscoggin Energy LLC.
97–94–NG	1352A Std	Androscoggin Energy LLC.
98–5–NG	1354# Std	Tenaska Washington Partners, L.P.
98–8–NG	1361# Std	Vermont Gas Systems, Inc.
98–20–NG	1382# Std	Transcanada Gas Services Inc.
98–30–NG	1385# Std	Rock-Tenn Company, Mill Division, Inc.
98–85–NG	1432# Std	Husky Gas Marketing Inc.
98–85–NG	1432A Std	Husky Gas Marketing Inc.
98–98–NG	1445# Std	Boston Gas Company.
99–26–NG	1479# Std	Progas U.S.A., Inc.
99–27–NG	1484# Std	City of Duluth, Minnesota.
99–48–NG	1507# Std	Milford Power Company, LLC.
99–70–NG	305C Std	Midland Cogeneration Venture Ltd. Partnership.
99–92–NG	1543# Std	Transcanada Gas Services Inc.
00–10–NG	1573# Std	RDO Foods Company.
01–15–NG	1678# Std	Energia Azteca X, S. de R.I. de C.V.
01–28–NG	1694# Std	H.Q. Energy Services (U.S.) Inc.
02–15–NG	1765# Std	Midland Cogeneration Venture Ltd. Partnership.
03–3–NG	1850# Std	AIG Energy Trading Inc.
03–23–NG	1869# Std	Pan-Alberta Gas (U.S.) Inc.
03–25–LNG	1872# Std	Duke Energy Marketing America, LLC.
03–29–NG	1876# Std	Alliance Energy Services, LLC.
03–30–NG	1877# Std	TransAlta Chihuahua S.A. de C.V.
03–33–NG	1882# Std	Husky Gas Marketing Inc.
03–34–NG	1880# Std	ONEOK Energy Marketing and Trading Company, L.P.
03–35–NG	1881# Std	Distribuidora de Gas Natural de Mexicali.
03–36–NG	1883# Std	Weyerhaeuser Company.
03–37–NG	1890# Std	Emera Energy Services Inc.
03–38–LNG	1885# Std	Padre Valencia Energy Corporation.
03–39–NG	1884# Std	Nstar Gas Company.
03–40–NG	1887# Std	Oxy Energy Canada, LLC.
03–42–NG	1894# Std	ConocoPhillips Energy Marketing Corp.
03–43–NG	1888# Std	Sierra Pacific Power Company.
03–44–NG	1889# Std	ConocoPhillips Company.
03–46–NG	1893# Std	Western Gas Resources, Inc.
03–48–NG	1895# Std	Tenaska Marketing Ventures.
03–51–NG	1898# Std	Cinergy Marketing & Trading, L.P.
03–52–NG	1899# Std	Pacific Gas & Electric Company.
03–54–NG	1901# Std	Avista Energy, Inc.
03–55–NG	1900# Std	Northeast Gas Markets L.L.C.
03–56–NG	1902# Std	Masspower.
03–57–NG	1907# Std	Wisconsin Public Service Corporation.
03–58–NG	1904# Std	Energy Trust Marketing Ltd.
03–59–NG	1903# Std	FUSI LLC.
03–59–NG	1903A Std	FUSI LLC.
03–60–NG	1917# Vac	Reliant Energy Services, Inc.
03–61–NG	1905# Std	Energetix, Inc.
03–62–NG	1906# Std	Reef Ventures, L.P.
03–63–NG	1908# Std	Middleton Energy Management Ltd.
03–64–NG	1909# Std	American Crystal Sugar Company.
03–65–NG	1910# Std	Dynegy Marketing and Trade.
03–66–NG	1911# Std	Enbridge Gas Services (U.S.) Inc.
03–67–NG	1912# Std	Omimex Canada, Ltd.
03–68–NG	1913# Std	Yankee Gas Services Company.
03–69–NG	1918# Std	Sempra Energy Solutions.
03–71–NG	1919# Std	Vermont Gas Systems, Inc.
03–72–NG	1916# Std	Dominion Energy Clearinghouse Canada Partnership.
03–73–NG	1915# Std	Pittsfield Generating Company, L.P.
03–74–NG	1920# Std	Phibro Inc.
03–75–NG	1921# Std	Rochester Gas & Electric Corporation.

ATTACHMENT—Continued

Docket No.	Order No.	Company name
03–76–LNG	1932# Std	BG LNG Services, LLC.
03–77–LNG	1926# Std	BG LNG Services, LLC.
03–78–NG	1922# Std	Stand Energy Corporation.
03–79–NG	1923# Std	Advance Energy, Inc.
03–80–NG	1925# Std	Peoples Energy Wholesale Marketing, LLC.
03–80–NG	1925A Std	PERC Canada, Inc.
03–81–NG	1927# Std	Direct Energy Marketing Inc.
03–83–NG	1928# Std	Direct Energy Marketing Limited.
03–84–NG	1929# Std	Enbridge Gas Distribution Inc.
03–85–NG	1930# Std	Williams Power Company, Inc.
03–86–NG	1931# Std	Suncor Energy Inc. and Suncor Energy Marketing Inc.
03–87–NG	1935# Std	Panhandle Eastern Pipe Line Company.
04–1–NG	1933# Std	Irving Oil Terminals Inc.
04–2–NG	1934# Std	NYSEG Solutions, Inc.
04–3–NG	1936# Std	Puget Sound Energy, Inc.
04–5–NG	1944# Std	Petrocom Energy Group, Ltd.
04–7–NG	1954# Std	Exco Energy Inc.
04–9–NG	1937# Std	EPCOR Merchant and Capital (U.S.) Inc.
04–11–NG	1942# Std	Burlington Resources Canada Marketing Ltd.
04–12–NG	1945# Std	Devon Canada Corporation.
04–14–NG	1943# Std	ONEOK Energy Services Canada, Ltd.
04–15–LNG	1947# Std	BG LNG Services, LLC.
04–17–NG	1951# Std	Sequent Energy Management, L.P.
04–18–NG	1948# Std	Entergy–Koch Trading Canada, ULC.
04–23–NG	1958# Std	Essex Gas Company.
04–26–NG	1960# Std	Brooklyn Union Gas Company.
04–27–NG	1961# Std	Keyspan Gas East Corporation.
04–31–NG	1955# Std	Central Lomas de Real, S.A. de C.V.
04–32–NG	1968# Std	EnergyNorth Natural Gas, Inc.
04–33–NG	1962# Std	EnergyNorth Natural Gas, Inc.
04–34–NG	1956# Std	Seminole Canada Gas Company.
04–35–NG	1957# Std	Gasoducto Rosarito, S. de R.l. de C.V.
04–36–NG	1963# Std	Duke Energy Marketing Canada Corp.
04–37–NG	1964# Std	Energy Source Canada, Inc.
04–38–NG	1965# Std	LD Energy Canada LP.
04–39–LNG	1977# Std	BG LNG Services, LLC.
04–39–LNG	1977A Std	BG LNG Services, LLC.
04–40–LNG	1975# Std	BG LNG Services, LLC.
04–40–LNG	1975A Std	BG LNG Services, LLC.
04–41–NG	1972# Std	OGE Energy Resources, Inc.
04–42–LNG	1974# Std	Shell NA LNG LLC.
04–43–NG	1973# Std	Northwest Natural Gas Company.
04–44–NG	1976# Std	NJR Energy Services Company.
04–46–NG	1978# Std	Anadarko Energy Services Company.
04–47–NG	1983# Std	UBS AG, London Branch.
04–48–NG	1980# Std	Indeck–Yerkes Limited Partnership.
04–49–NG	1979# Std	Indeck Oswego Limited Partnership.
04–50–NG	1981# Std	New York State Electric & Gas Corporation.
04–51–NG	1982# Std	WGR Canada, Inc.
04–53–NG	1984# Std	National Fuel Resources, Inc.
04–54–NG	1985# Std	West Texas Gas, Inc.
04–57–NG	1988# Std	St. Lawrence Gas Company, Inc.
04–58–LNG	1991# Std	Tractebel LNG North America Service Corporation.
04–60–NG	1992# Std	Portland General Electric Company.
04–61–NG	1993# Std	Premstar Energy Canada Ltd.
04–62–LNG	1995# Std	LNGJ USA Inc.
04–63–LNG	1994# Std	Alea Trading LLC.
04–64–NG	1996# Std	First Indigenous Depository Company LLC.
04–65–NG	1998# Std	Power City Partners, L.P.
04–70–NG	2001# Std	Avista Corporation.
04–73–NG	2005# Std	Empire Natural Gas Corporation.
04–74–NG	2006# Std	Marathon Oil Company.
04–75–NG	2007# Std	Alcoa Inc.
04–76–NG	2008# Std	IGI Resources, Inc.
04–77–LNG	2009# Std	BP Energy Company.
04–78–NG	2011# Std	Select Energy, Inc.
04–79–NG	2015# Std	Select Energy New York, Inc.
04–80–NG	2010# Std	Union Gas Limited.
04–81–NG	2012# Std	Concord Energy LLC.
04–82–NG	2013# Std	Central Valle Hermoso, S.A. de C.V.
04–83–NG	01 Err	San Diego Gas & Electric Company.
04–83–NG	2014# Std	San Diego Gas & Electric Company.

ATTACHMENT—Continued

Docket No.	Order No.	Company name
04–84–NG	2017# Std	Merrill Lynch Commodities, Inc.
04–85–NG	2016# Std	BP Canada Energy Marketing Corporation.
04–87–NG	2023# Std	Boise White Paper, L.L.C.
04–88–NG	2019# Std	Cook Inlet Energy Supply L.L.C.
04–89–NG	2021# Std	Premstar Energy Canada LP.
04–90–NG	2020# Std	CoEnergy Trading Company.
04–93–NG	2024# Std	TransCanada Energy Ltd.
04–94–NG	2037# Std	Hunt Oil Company of Canada, Inc.
04–99–NG	2032# Std	Glendale Water and Power.
04–104–LNG	2040# Std	Marathon LNG Marketing LLC.
04–108–NG	2043# Std	Cannat Energy Inc.
04–111–NG	2039# Std	Duke Energy Trading & Marketing, L.L.C.
04–112–NG	2038# Std	Regent Resources Ltd.
04–113–NG	2042# Std	Montana-Dakota Utilities Company.
04–114–NG	2041# Std	Alliance Canada Marketing L.P.
04–115–NG	2044# Std	Sempra Energy Resources.
04–116–NG	2048# Std	Northwestern Corporation dba North Western Energy.
04–117–NG	2056# Std	Engage Energy Canada, L.P.
04–120–NG	2049# Std	Pemex Gas Y Petroquimica Basica.
04–121–NG	2051# Std	Cascade Natural Gas Corporation.
04–122–NG	2053# Std	Keyspan Gas East Corporation.
04–123–NG	2057# Std	Nexen Marketing U.S.A. Inc.
04–124–NG	2062# Std	Northern Utilities, Inc.
04–125–NG	2061# Std	Boston Gas Company.
04–127–NG	2054# Std	BP Energy Company.
04–128–NG	2058# Std	Termoelectrica de Mexicali, S. de R.L. de C.V.
04–129–NG	2059# Std	Boss Energy, Ltd.
04–130–NG	2060# Std	Texas Eastern Transmission, LP.
04–131–NG	2064# Std	Abitibi-Consolidated Company of Canada.
04–132–NG	2063# Std	Dominion Exploration Canada Ltd.
05–1–NG	2065# Std	Selkirk Cogeneration Partners, L.P.
05–2–NG	2067# Std	Sprague Energy Corporation.
05–3–NG	2066# Std	Fortuna (US) L.P.
05–4–LNG	2068# Std	Nitogo Management, Inc.
05–5–NG	2069# Std	Petro-Canada Hydrocarbons Inc.
05–6–NG	2071# Std	Powerex Corporation.
05–7–NG	2070# Std	Chehalis Power Generating, L.P.
05–8–NG	2074# Std	Total Gas & Power North America, Inc.
05–9–NG	2072# Std	National Fuel Gas Distribution Corporation.
05–10–LNG	2073# Std	LNG Partners, LLC.
05–11–NG	2075# Std	Cargill, Incorporated.
05–12–LNG	2077# Std	Statoil Natural Gas LLC.
05–14–NG	2078# Std	Bay State Gas Company.
05–15–NG	2076# Std	Progas U.S.A., Inc.
05–16–NG	2080# Std	H.Q. Energy Services (U.S.) Inc.
05–17–NG	2081# Std	Avista Energy, Inc.
05–18–NG	2082# Std	Sempra Energy Trading Corporation.
05–19–NG	2083# Std	Eagle Energy Partners, I, L.P.
05–20–NG	2084# Std	Cinergy Marketing & Trading, L.P.
05–23–NG	2086# Std	Mexicana de Cobre, S.A. de C.V.
05–24–NG	2104# Std	Ocean State Power II.
05–25–NG	2103# Std	Ocean State Power I.
05–26–NG	2087# Std	Goldendale Energy Center, LLC.
05–27–NG	2105# Std	Ocean State Power II.
05–28–NG	2089# Std	KeySpan-Ravenswood, LLC.
05–45–LNG	2116# Std	Excelerate Gas Marketing, LLC.
05–46–NG	2111# Std	ECOGAS Mexico.
05–47–NG	2113# Std	Pacific Summit Energy LLC.
05–51–NG	2108# Std	ConocoPhillips Energy Marketing Corp.
05–53–LNG	2112# Std	Kinetic LNG.
05–54–NG	2114# Std	Ontario Energy Savings L.P.
05–55–NG	2115# Std	Eagle Energy Marketing Canada, L.P.
05–56–NG	2117# Std	ONEOK Energy Services Company, L.P.
05–57–NG	2119# Std	Husky Gas Marketing Inc.
05–58–NG	2118# Std	TransAlta Energy Marketing Corp.
05–59–NG	2121# Std	Cinergy Canada, Inc.
05–60–NG	2120# Std	Cinergy Marketing & Trading, L.P.
05–61–NG	2122# Std	ConocoPhillips Company.
05–62–LNG	2123# Std	Enterprise Products Operating L.P.
05–63–NG	2124# Std	OXY Energy Canada, Inc.
05–64–NG	2125# Std	TXU Portfolio Management, L.P.
05–65–NG	2127# Std	Portland General Electric Company.

ATTACHMENT—Continued

Docket No.	Order No.	Company name
05–66–NG	2126# Std	Wisconsin Public Service Corporation.
05–67–NG	2128# Std	Pacific Gas and Electric Company.
05–68–NG	2129# Std	Public Utility District No. 1 of Clark County, Washington.
05–72–NG	2130# Std	Emera Energy Services, Inc.
05–52–NG	2109# Std	OXYEnergy Canada LLC.

[FR Doc. 05–20698 Filed 10–14–05 8:45 am]

BILLING CODE 6450–01–P

DEPARTMENT OF ENERGY

Federal Energy Regulatory Commission

[Docket No. RP02–335–007]

ANR Pipeline Company; Notice of Compliance Filing

October 6, 2005.

Take notice that on September 30, 2005, ANR Pipeline Company (ANR) submitted a compliance filing pursuant to the Commission's September 15, 2005 Order on Compliance Filing, Clarification and Rehearing in Docket Nos. RP02–335–005 and RP02–335–006.

ANR states that copies of the filing were served on parties on the official service list in the above-captioned proceeding.

Any person desiring to protest this filing must file in accordance with Rule 211 of the Commission's Rules of Practice and Procedure (18 CFR 385.211). Protests to this filing will be considered by the Commission in determining the appropriate action to be taken, but will not serve to make protestants parties to the proceeding. Such protests must be filed in accordance with the provisions of Section 154.210 of the Commission's regulations (18 CFR 154.210). Anyone filing a protest must serve a copy of that document on all the parties to the proceeding.

The Commission encourages electronic submission of protests in lieu of paper using the ''eFiling'' link at *http://www.ferc.gov.* Persons unable to file electronically should submit an original and 14 copies of the protest to the Federal Energy Regulatory Commission, 888 First Street, NE., Washington, DC 20426.

This filing is accessible on-line at *http://www.ferc.gov*, using the ''eLibrary'' link and is available for review in the Commission's Public Reference Room in Washington, DC. There is an ''eSubscription'' link on the Web site that enables subscribers to receive e-mail notification when a document is added to a subscribed docket(s). For assistance with any FERC Online service, please e-mail *FERCOnlineSupport@ferc.gov*, or call (866) 208–3676 (toll free). For TTY, call (202) 502–8659.

Magalie R. Salas,

Secretary.

[FR Doc. E5–5663 Filed 10–14–05; 8:45 am]

BILLING CODE 6717–01–P

DEPARTMENT OF ENERGY

Federal Energy Regulatory Commission

[Docket No. RP99–301–134]

ANR Pipeline Company; Notice of Negotiated Rate Filing

October 6, 2005.

Take notice that on September 30, 2005, ANR Pipeline Company (ANR) tendered for filing and approval an amendment to an existing Amended and Restated Minimum Delivery Pressure and Maximum Delivery Level Agreement between ANR and Wisconsin Electric Power Company and Wisconsin Gas L.L.C. (WE–WG).

ANR states that the purpose of the amendment is to provide for a one year extension on the ANR provided capital funding and a waiver of the delivery pressure rights of WE–WG. ANR requests that the Commission accept and approve the subject amendment to be effective November 1, 2005.

Any person desiring to intervene or to protest this filing must file in accordance with Rules 211 and 214 of the Commission's Rules of Practice and Procedure (18 CFR 385.211 and 385.214). Protests will be considered by the Commission in determining the appropriate action to be taken, but will not serve to make protestants parties to the proceeding. Any person wishing to become a party must file a notice of intervention or motion to intervene, as appropriate. Such notices, motions, or protests must be filed in accordance with the provisions of Section 154.210 of the Commission's regulations (18 CFR 154.210). Anyone filing an intervention or protest must serve a copy of that document on the Applicant. Anyone filing an intervention or protest on or before the intervention or protest date need not serve motions to intervene or protests on persons other than the Applicant.

The Commission encourages electronic submission of protests and interventions in lieu of paper using the ''eFiling'' link at *http://www.ferc.gov*. Persons unable to file electronically should submit an original and 14 copies of the protest or intervention to the Federal Energy Regulatory Commission, 888 First Street, NE., Washington, DC 20426.

This filing is accessible on-line at *http://www.ferc.gov*, using the ''eLibrary'' link and is available for review in the Commission's Public Reference Room in Washington, DC. There is an ''eSubscription'' link on the Web site that enables subscribers to receive e-mail notification when a document is added to a subscribed docket(s). For assistance with any FERC Online service, please e-mail *FERCOnlineSupport@ferc.gov*, or call (866) 208–3676 (toll free). For TTY, call (202) 502–8659.

Magalie R. Salas,

Secretary.

[FR Doc. E5–5686 Filed 10–14–05; 8:45 am]

BILLING CODE 6717–01–P

DEPARTMENT OF ENERGY

Federal Energy Regulatory Commission

[Docket No. PR05–22–000]

Calpine Texas Pipeline, L.P.; Notice of Petition for Rate Approval

October 6, 2005.

Take notice that on September 28, 2005, Calpine Texas Pipeline, L.P. (Calpine Texas) filed a petition for rate approval pursuant to section 284.123(b)(2) of the Commission's Regulations. Calpine Texas requests the Commission to approve a maximum monthly reservation charge of $0.4898 per Dth, a maximum firm commodity charge of $0.00 per Dth, and a maximum interruptible transportation rate of

$0.0161 per Dth for its Baytown System. Calpine Texas also requests the Commission to approve a maximum monthly reservation charge of $0.8495 per Dth, a maximum firm commodity charge of $0.00 per Dth, and an interruptible transportation rate of $0.0279 per Dth for its Freestone System.

Any person desiring to participate in this rate proceeding must file in accordance with Rules 211 and 214 of the Commission's Rules of Practice and Procedure (18 CFR 385.211 and 385.214). Protests will be considered by the Commission in determining the appropriate action to be taken, but will not serve to make protestants parties to the proceeding. Any person wishing to become a party must file a notice of intervention or motion to intervene, as appropriate. Such notices, motions, or protests must be filed on or before the date as indicated below. Anyone filing an intervention or protest must serve a copy of that document on the Applicant. Anyone filing an intervention or protest on or before the intervention or protest date need not serve motions to intervene or protests on persons other than the Applicant.

The Commission encourages electronic submission of protests and interventions in lieu of paper using the ''eFiling'' link at *http://www.ferc.gov*. Persons unable to file electronically should submit an original and 14 copies of the protest or intervention to the Federal Energy Regulatory Commission, 888 First Street, NE., Washington, DC 20426.

This filing is accessible on-line at *http://www.ferc.gov*, using the ''eLibrary'' link and is available for review in the Commission's Public Reference Room in Washington, DC. There is an ''eSubscription'' link on the Web site that enables subscribers to receive e-mail notification when a document is added to a subscribed docket(s). For assistance with any FERC Online service, please e-mail *FERCOnlineSupport@ferc.gov*, or call (866) 208–3676 (toll free). For TTY, call (202) 502–8659.

Comment Date: 5 p.m. Eastern Time October 24, 2005.

Magalie R. Salas,

Secretary.

[FR Doc. E5–5660 Filed 10–14–05; 8:45 am]

BILLING CODE 6717–01–P

DEPARTMENT OF ENERGY

Federal Energy Regulatory Commission

[Docket No. RP06–3–000]

Colorado Interstate Gas Company; Notice of Proposed Changes in FERC Gas Tariff

October 6, 2005.

Take notice that on October 3, 2005, Colorado Interstate Gas Company (CIG) tendered for filing as part of its FERC Gas Tariff, First Revised Volume No. 1, Second Revised Sheet No. 358A, to become effective November 2, 2005.

CIG states that the tariff sheet updates the revenue crediting provisions to include gas confiscated under Rate Schedule IS–1.

Any person desiring to intervene or to protest this filing must file in accordance with Rules 211 and 214 of the Commission's Rules of Practice and Procedure (18 CFR 385.211 and 385.214). Protests will be considered by the Commission in determining the appropriate action to be taken, but will not serve to make protestants parties to the proceeding. Any person wishing to become a party must file a notice of intervention or motion to intervene, as appropriate. Such notices, motions, or protests must be filed in accordance with the provisions of Section 154.210 of the Commission's regulations (18 CFR 154.210). Anyone filing an intervention or protest must serve a copy of that document on the Applicant. Anyone filing an intervention or protest on or before the intervention or protest date need not serve motions to intervene or protests on persons other than the Applicant.

The Commission encourages electronic submission of protests and interventions in lieu of paper using the ''eFiling'' link at *http://www.ferc.gov.* Persons unable to file electronically should submit an original and 14 copies of the protest or intervention to the Federal Energy Regulatory Commission, 888 First Street, NE., Washington, DC 20426.

This filing is accessible on-line at *http://www.ferc.gov,* using the ''eLibrary'' link and is available for review in the Commission's Public Reference Room in Washington, DC. There is an ''eSubscription'' link on the Web site that enables subscribers to receive e-mail notification when a document is added to a subscribed docket(s). For assistance with any FERC Online service, please e-mail *FERCOnlineSupport@ferc.gov,* or call (866) 208–3676 (toll free). For TTY, call (202) 502–8659.

Magalie R. Salas,

Secretary.

[FR Doc. E5–5678 Filed 10–14–05; 8:45 am]

BILLING CODE 6717–01–P

DEPARTMENT OF ENERGY

Federal Energy Regulatory Commission

[Docket No. EG06–1–000]

Covanta Fairfax, Inc.; Notice of Application for Commission Determination of Exempt Wholesale Generator Status

October 6, 2005.

Take notice that on October 3, 2005, Covanta Fairfax, Inc., a Virginia corporation hereby submits an application for exempt wholesale generator status pursuant to 18 CFR 365.3 of the Commission's regulations.

Any person desiring to intervene or to protest this filing must file in accordance with Rules 211 and 214 of the Commission's Rules of Practice and Procedure (18 CFR 385.211, 385.214). Protests will be considered by the Commission in determining the appropriate action to be taken, but will not serve to make protestants parties to the proceeding. Any person wishing to become a party must file a notice of intervention or motion to intervene, as appropriate. Such notices, motions, or protests must be filed on or before the comment date. Anyone filing an intervention or protest on or before the intervention or protest date need not serve motions to intervene or protests on persons other than the Applicant.

The Commission encourages electronic submission of protests and interventions in lieu of paper using the ''eFiling'' link at *http://www.ferc.gov.* Persons unable to file electronically should submit an original and 14 copies of the protest or intervention to the Federal Energy Regulatory Commission, 888 First Street, NE., Washington, DC 20426.

This filing is accessible on-line at *http://www.ferc.gov,* using the ''eLibrary'' link and is available for review in the Commission's Public Reference Room in Washington, DC. There is an ''eSubscription'' link on the Web site that enables subscribers to receive e-mail notification when a document is added to a subscribed docket(s). For assistance with any FERC Online service, please e-mail *FERCOnlineSupport@ferc.gov,* or call

(866) 208–3676 (toll free). For TTY, call (202) 502–8659.

Comment Date: 5 p.m. Eastern Time on October 24, 2005.

Magalie R. Salas,

Secretary.

[FR Doc. E5–5687 Filed 10–14–05; 8:45 am]

BILLING CODE 6717–01–P

DEPARTMENT OF ENERGY

Federal Energy Regulatory Commission

[Docket No. RP05–528–001]

Dominion Cove Point LNG, LP; Notice of Compliance Filing

October 6, 2005.

Take notice that on September 30, 2005, Dominion Cove Point LNG, LP (Cove Point) submitted a compliance filing pursuant to the Commission's ''Order Accepting and Suspending Tariff Sheets Subject to Refund and Conditions'' issued September 1, 2005 in Docket No. RP05–528–000.

Cove Point states that copies of the filing were served on parties on the official service list.

Any person desiring to protest this filing must file in accordance with Rule 211 of the Commission's Rules of Practice and Procedure (18 CFR 385.211). Protests to this filing will be considered by the Commission in determining the appropriate action to be taken, but will not serve to make protestants parties to the proceeding. Such protests must be filed in accordance with the provisions of Section 154.210 of the Commission's regulations (18 CFR 154.210). Anyone filing a protest must serve a copy of that document on all the parties to the proceeding.

The Commission encourages electronic submission of protests in lieu of paper using the ''eFiling'' link at *http://www.ferc.gov*. Persons unable to file electronically should submit an original and 14 copies of the protest to the Federal Energy Regulatory Commission, 888 First Street, NE., Washington, DC 20426.

This filing is accessible on-line at *http://www.ferc.gov*, using the ''eLibrary'' link and is available for review in the Commission's Public Reference Room in Washington, DC. There is an ''eSubscription'' link on the Web site that enables subscribers to receive e-mail notification when a document is added to a subscribed docket(s). For assistance with any FERC Online service, please e-mail *FERCOnlineSupport@ferc.gov*, or call (866) 208–3676 (toll free). For TTY, call (202) 502–8659.

Magalie R. Salas,

Secretary.

[FR Doc. E5–5673 Filed 10–14–05; 8:45 am]

BILLING CODE 6717–01–P

DEPARTMENT OF ENERGY

Federal Energy Regulatory Commission

[Docket No. CP05–419–000]

El Paso Natural Gas Company; Notice of Request Under Blanket Authorization

October 6, 2005.

Take notice that on September 30, 2005, El Paso Natural Gas Company (EPNG), P.O. Box 1087, Colorado Springs, Colorado 80944, filed in Docket No. CP05–419–000 a request pursuant to 18 CFR 157.205(b) and 157.211(a)(2) of the Commission's Regulations under the Natural Gas Act for authorization to construct and operate a new delivery point, located in Maricopa County, Arizona to serve Therm-O-Rock West, Inc. (Therm-O-Rock), under the authorization issued in Docket No. CP82–435–000 pursuant to section 7 of the Natural Gas Act, all as more fully described in the request.

This filing is available for review at the Commission in the Public Reference Room or may be viewed on the Commission's Web site at *http://www.ferc.gov* using the ''eLibrary'' link. Enter the docket number excluding the last three digits in the docket number field to access the document. For assistance, please contact FERC Online Support at *FERCOnlineSupport@ferc.gov* or toll-free at (866) 208–3676, or for TTY, contact (202) 502–8659.

Any questions concerning this request may be directed to Richard Derryberry, Director of Regulatory Affairs, El Paso Natural Gas Company, P.O. Box 1087, Colorado Springs, Colorado 80944, at (719) 520–3782 or Fax (719) 520–4697.

EPNG states that Therm-O-Rock currently owns and operates an industrial minerals processing plant in Maricopa County, Arizona. EPNG avers that Therm-O-Rock utilizes natural gas to fuel furnaces. EPNG indicates that Therm-O-Rock has requested natural gas service directly from EPNG for its processing plant which is currently served by Southwest Gas Corporation.

EPNG requests authorization to construct, own and operate the proposed Willis Road Delivery Point to provide service for Therm-O-Rock. EPNG contends that EPNG's environmental analysis supports the conclusion that the construction and operation of the proposed delivery point would not be a major Federal action significantly affecting the human environment. EPNG estimates the cost of the proposed facilities to be approximately $171,852 which would be reimbursed by Therm-O-Rock. EPNG maintains that the proposal would have no significant effect on EPNG's peak day and annual deliveries, and service to Therm-O-Rock through the new delivery point would be accomplished by use of interruptible transportation capacity without detriment to EPNG's other existing customers.

Any person or the Commission's Staff may, within 45 days after the issuance of the instant notice by the Commission, file pursuant to Rule 214 of the Commission's Procedural Rules (18 CFR 385.214) a motion to intervene or notice of intervention and, pursuant to Section 157.205 of the Commission's Regulations under the Natural Gas Act (NGA) (18 CFR 157.205) a protest to the request. If no protest is filed within the time allowed therefore, the proposed activity shall be deemed to be authorized effective the day after the time allowed for protest. If a protest is filed and not withdrawn within 30 days after the time allowed for filing a protest, the instant request shall be treated as an application for authorization pursuant to Section 7 of the NGA.

Comments, protests and interventions may be filed electronically via the Internet in lieu of paper. See, 18 CFR 385.2001(a)(1)(iii) and the instructions on the Commission's Web site under the ''e-filing'' link. The Commission strongly encourages electronic filings.

Magalie R. Salas,

Secretary.

[FR Doc. E5–5658 Filed 10–14–05; 8:45 am]

BILLING CODE 6717–01–P

DEPARTMENT OF ENERGY

Federal Energy Regulatory Commission

[Docket No. RP05–444–001]

Enbridge Pipelines (Midla) L.L.C.; Notice of Compliance Filings

October 6, 2005.

Take notice that on September 30, 2005, Enbridge Pipelines (Midla) L.L.C. (Midla) tendered for filing as part of its FERC Gas Tariff, Fifth Revised Volume No. 1, the following revised tariff sheets, to become effective November 1, 2005:

Substitute Second Revised Sheet No. 116
Substitute Original Sheet No. 121A
Substitute First Revised Sheet No. 170
Substitute First Revised Sheet No. 171
Substitute First Revised Sheet No. 182
Substitute First Revised Sheet No. 183
Substitute First Revised Sheet No. 188A

Midla states that the filing is being made in compliance with the Commission's Letter Order issued September 1, 2005, in this proceeding.

Midla states that complete copies of its filing are being mailed to all of the parties on the service list for this proceeding, all of its jurisdictional customers, and applicable State commissions.

Any person desiring to protest this filing must file in accordance with Rule 211 of the Commission's Rules of Practice and Procedure (18 CFR 385.211). Protests to this filing will be considered by the Commission in determining the appropriate action to be taken, but will not serve to make protestants parties to the proceeding. Such protests must be filed in accordance with the provisions of Section 154.210 of the Commission's regulations (18 CFR 154.210). Anyone filing a protest must serve a copy of that document on all the parties to the proceeding.

The Commission encourages electronic submission of protests in lieu of paper using the ''eFiling'' link at *http://www.ferc.gov.* Persons unable to file electronically should submit an original and 14 copies of the protest to the Federal Energy Regulatory Commission, 888 First Street, NE., Washington, DC 20426.

This filing is accessible on-line at *http://www.ferc.gov,* using the ''eLibrary'' link and is available for review in the Commission's Public Reference Room in Washington, DC. There is an ''eSubscription'' link on the Web site that enables subscribers to receive e-mail notification when a document is added to a subscribed docket(s). For assistance with any FERC Online service, please e-mail *FERCOnlineSupport@ferc.gov,* or call (866) 208–3676 (toll free). For TTY, call (202) 502–8659.

Magalie R. Salas,

Secretary.

[FR Doc. E5–5655 Filed 10–14–05; 8:45 am]

BILLING CODE 6717–01–P

DEPARTMENT OF ENERGY

Federal Energy Regulatory Commission

[Docket No. RP05–442–001]

Enbridge Pipelines (AlaTenn) L.L.C.; Notice of Compliance Filing

October 6, 2005.

Take notice that on September 30, 2005, Enbridge Pipelines L.L.C. (AlaTenn) tendered for filing as part of its FERC Gas Tariff, Fourth Revised Volume No. 1, the following tariff sheets, to be effective September 1, 2005:

Substitute Original Sheet No. 109A
Substitute First Revised Sheet No. 132
Substitute First Revised Sheet No. 133
Substitute Second Revised Sheet No. 135
Substitute First Revised Sheet No. 136
Substitute Original Sheet No. 162A
Substitute Third Revised Sheet No. 198

AlaTenn states the filing is being made in compliance with the Commission's Letter Order dated September 1, 2005 in this proceeding.

AlaTenn states that complete copies of its filing are being mailed to all of the parties on the service list, all of its jurisdictional customers, and applicable State commissions.

Any person desiring to protest this filing must file in accordance with Rule 211 of the Commission's Rules of Practice and Procedure (18 CFR 385.211). Protests to this filing will be considered by the Commission in determining the appropriate action to be taken, but will not serve to make protestants parties to the proceeding. Such protests must be filed in accordance with the provisions of Section 154.210 of the Commission's regulations (18 CFR 154.210). Anyone filing a protest must serve a copy of that document on all the parties to the proceeding.

The Commission encourages electronic submission of protests in lieu of paper using the ''eFiling'' link at *http://www.ferc.gov*. Persons unable to file electronically should submit an original and 14 copies of the protest to the Federal Energy Regulatory Commission, 888 First Street, NE., Washington, DC 20426.

This filing is accessible on-line at *http://www.ferc.gov*, using the ''eLibrary'' link and is available for review in the Commission's Public Reference Room in Washington, DC. There is an ''eSubscription'' link on the Web site that enables subscribers to receive e-mail notification when a document is added to a subscribed docket(s). For assistance with any FERC Online service, please e-mail *FERCOnlineSupport@ferc.gov*, or call (866) 208–3676 (toll free). For TTY, call (202) 502–8659.

Magalie R. Salas,

Secretary.

[FR Doc. E5–5667 Filed 10–14–05; 8:45 am]

BILLING CODE 6717–01–P

DEPARTMENT OF ENERGY

Federal Energy Regulatory Commission

[Docket No. RP05–443–002]

Enbridge Pipelines (KPC); Notice of Compliance Filing

October 6, 2005.

Take notice that on September 29, 2005, Enbridge Pipelines (KPC), (KPC) tendered for filing as part of its FERC Gas Tariff, First Revised Volume No. 1, the following revised tariff sheets, to become effective November 1, 2005:

Substitute First Revised Sheet No. 121D.
Substitute Third Revised Sheet No. 180.

KPC states that the filing is being made in compliance with the Commission's September 19, 2005 Order in this proceeding.

KPC states that complete copies of its filing are being mailed to all of the parties on the service list for this proceeding, all of its jurisdictional customers, and applicable state commissions.

Any person desiring to protest this filing must file in accordance with Rule 211 of the Commission's Rules of Practice and Procedure (18 CFR 385.211). Protests to this filing will be considered by the Commission in determining the appropriate action to be taken, but will not serve to make protestants parties to the proceeding. Such protests must be filed in accordance with the provisions of section 154.210 of the Commission's regulations (18 CFR 154.210). Anyone filing a protest must serve a copy of that document on all the parties to the proceeding.

The Commission encourages electronic submission of protests in lieu of paper using the ''eFiling'' link at *http://www.ferc.gov.* Persons unable to file electronically should submit an original and 14 copies of the protest to the Federal Energy Regulatory Commission, 888 First Street, NE., Washington, DC 20426.

This filing is accessible on-line at *http://www.ferc.gov,* using the ''eLibrary'' link and is available for review in the Commission's Public Reference Room in Washington, DC. There is an ''eSubscription'' link on the

Web site that enables subscribers to receive e-mail notification when a document is added to a subscribed docket(s). For assistance with any FERC Online service, please e-mail *FERCOnlineSupport@ferc.gov,* or call (866) 208–3676 (toll free). For TTY, call (202) 502–8659.

Magalie R. Salas,

Secretary.

[FR Doc. E5–5668 Filed 10–14–05; 8:45 am]

BILLING CODE 6717–01–P

DEPARTMENT OF ENERGY

Federal Energy Regulatory Commission

[Docket No. EY05–95–20–001, RM01–10–000, and EY05–13–001]

Standards of Conduct for Transmission Providers; Entergy Services, Inc.; Notice Granting Extension of Waiver of Recordkeeping Requirements

October 7, 2005.

Due to the emergency conditions in Louisiana and Texas created by Hurricane Rita, on September 23, 2005, the Commission issued a notice that, among other things, allowed affected transmission providers to delay, until October 7, 2005, compliance with the requirement of section 358.4(a)(2) of the Commission's regulations, 18 CFR 358.4(a)(2)(2005), to report to the Commission and post on the OASIS or Internet Web site, as applicable, each emergency that resulted in any deviation from the standards of conduct.[1] Due to the extreme nature of the emergency, the Commission also waived, until October 7, 2005, the requirements to record and retain a record of each deviation of the standards of conduct.[2] The notice added that the Commission would consider extending the waiver if it continued to be needed after October 7, 2005. The Commission had previously granted similar waivers due to Hurricane Katrina.[3]

Entergy Services, Inc., on behalf of Entergy Operating Companies, seeks a two-week extension, through October 21, 2005, of the waiver of the requirement that Entergy record a log of each individual deviation from the standards of conduct associated with the information sharing and joint operations activities necessitated by the hurricanes. It explains that in the area impacted by Hurricane Rita, five of its fossil-fueled units remain off-line, approximately 106 transmission lines and 70 substations are out of service, and Entergy's transmission system in Texas remains largely isolated from the rest of Entergy's system. In addition, in the City of New Orleans and the Amite-South area, Entergy continues to experience emergency circumstances affecting system reliability as a result of Hurricane Katrina. These circumstances, according to Entergy, require detailed communication, coordination and joint operations among Entergy's transmission and merchant units on virtually an hourly basis and the requirement to log each individual deviation would be an extremely burdensome task that would complicate Entergy's restoration operation. Entergy proposes to limit the application of the waiver to deviations associated with information sharing and joint operations activities necessitated by Hurricanes Rita and Katrina, but would not apply the waiver to deviations from standard OATT practices.

The Commission grants Entergy's request for this limited waiver under these emergency circumstances.

Magalie R. Salas,

Secretary.

[FR Doc. E5–5703 Filed 10–14–05; 8:45 am]

BILLING CODE 6717–01–P

[1] Notice Granting Extension of Time To Comply With Posting and Other Requirements, Standards of Conduct for Transmission Providers, Docket Nos. EY05–20–000, *et al.* (September 23, 2005).

[2] Id.

[3] Notice Granting Extension of Time To Comply With Posting and Other Requirements, Standards of Conduct for Transmission Providers, Docket Nos. EY05–14–000, *et al.* (August 31, 2005); Notice Waiving Recordkeeping Requirements, Standards of Conduct for Transmission Providers, Docket Nos. EY05–14–001, *et al.* (September 7, 2005).

DEPARTMENT OF ENERGY

Federal Energy Regulatory Commission

[Docket No. RP99–518–077]

Gas Transmission Northwest Corporation; Notice of Negotiated Rate

October 6, 2005.

Take notice that on September 30, 2005, Gas Transmission Northwest Corporation (GTN) tendered for filing as part of its FERC Gas Tariff, Third Revised Volume No. 1–A, Twenty-Fifth Revised Sheet No. 15, to become effective October 1, 2005.

GTN states that this sheet is being filed to reflect the continuation of a negotiated rate agreement pursuant to evergreen provisions contained in the agreement.

Any person desiring to intervene or to protest this filing must file in accordance with Rules 211 and 214 of the Commission's Rules of Practice and Procedure (18 CFR 385.211 and 385.214). Protests will be considered by the Commission in determining the appropriate action to be taken, but will not serve to make protestants parties to the proceeding. Any person wishing to become a party must file a notice of intervention or motion to intervene, as appropriate. Such notices, motions, or protests must be filed in accordance with the provisions of Section 154.210 of the Commission's regulations (18 CFR 154.210). Anyone filing an intervention or protest must serve a copy of that document on the Applicant. Anyone filing an intervention or protest on or before the intervention or protest date need not serve motions to intervene or protests on persons other than the Applicant.

The Commission encourages electronic submission of protests and interventions in lieu of paper using the ''eFiling'' link at *http://www.ferc.gov*. Persons unable to file electronically should submit an original and 14 copies of the protest or intervention to the Federal Energy Regulatory Commission, 888 First Street, NE., Washington, DC 20426.

This filing is accessible on-line at *http://www.ferc.gov*, using the ''eLibrary'' link and is available for review in the Commission's Public Reference Room in Washington, DC. There is an ''eSubscription'' link on the Web site that enables subscribers to receive e-mail notification when a document is added to a subscribed docket(s). For assistance with any FERC Online service, please e-mail *FERCOnlineSupport@ferc.gov*, or call (866) 208–3676 (toll free). For TTY, call (202) 502–8659.

Magalie R. Salas,

Secretary.

[FR Doc. E5–5670 Filed 10–14–05; 8:45 am]

BILLING CODE 6717–01–P

DEPARTMENT OF ENERGY

Federal Energy Regulatory Commission

[Docket No. ER05–1316–000]

Kumeyaay Wind LLC; Notice of Issuance of Order

October 6, 2005.

Kumeyaay Wind LLC (Kumeyaay) filed an application for market-based rate authority, with an accompanying rate tariff. The proposed rate tariff provides for the sales of capacity, energy, and ancillary services at market-

based rates and for the reassignment of transmission capacity. Kumeyaay also requested waiver of various Commission regulations. In particular, Kumeyaay requested that the Commission grant blanket approval under 18 CFR part 34 of all future issuances of securities and assumptions of liability by Kumeyaay.

On October 5, 2005, pursuant to delegated authority, the Director, Division of Tariffs and Market Development—South, granted the request for blanket approval under part 34. The Director's order also stated that the Commission would publish a separate notice in the **Federal Register** establishing a period of time for the filing of protests. Accordingly, any person desiring to be heard or to protest the blanket approval of issuances of securities or assumptions of liability by Kumeyaay should file a motion to intervene or protest with the Federal Energy Regulatory Commission, 888 First Street, NE., Washington, DC 20426, in accordance with Rules 211 and 214 of the Commission's Rules of Practice and Procedure. 18 CFR 385.211, 385.214 (2004).

Notice is hereby given that the deadline for filing motions to intervene or protests is November 4, 2005.

Absent a request to be heard in opposition by the deadline above, Kumeyaay is authorized to issue securities and assume obligations or liabilities as a guarantor, indorser, surety, or otherwise in respect of any security of another person; provided that such issuance or assumption is for some lawful object within the corporate purposes of Kumeyaay, compatible with the public interest, and is reasonably necessary or appropriate for such purposes.

The Commission reserves the right to require a further showing that neither public nor private interests will be adversely affected by continued approval of Nuclear Kumeyaay's issuances of securities or assumptions of liability. Docket No. ER05–1316–000.

Copies of the full text of the Director's Order are available from the Commission's Public Reference Room, 888 First Street, NE., Washington, DC 20426. The Order may also be viewed on the Commission's Web site at *http://www.ferc.gov*, using the eLibrary link. Enter the docket number excluding the last three digits in the docket number filed to access the document. Comments, protests, and interventions may be filed electronically via the Internet in lieu of paper. See, 18 CFR 385.2001(a)(1)(iii) and the instructions on the Commission's Web site under the ''e-Filing'' link. The Commission strongly encourages electronic filings.

Magalie R. Salas,

Secretary.

[FR Doc. E5–5659 Filed 10–14–05; 8:45 am]

BILLING CODE 6717–01–P

DEPARTMENT OF ENERGY

Federal Energy Regulatory Commission

[Docket No. EL05–82–001]

Midwest Independent Transmission System Operator, Inc.; Notice of Filing

October 11, 2005.

Take notice that on September 30, 2005, Midwest Independent Transmission System Operator, Inc. (Midwest ISO) tendered for filing a report concerning refunds made to Alliant Energy Corporate Services, Inc. pursuant to 111 FERC ¶ 61,043 (2005).

Any person desiring to intervene or to protest this filing must file in accordance with Rules 211 and 214 of the Commission's Rules of Practice and Procedure (18 CFR 385.211, 385.214). Protests will be considered by the Commission in determining the appropriate action to be taken, but will not serve to make protestants parties to the proceeding. Any person wishing to become a party must file a notice of intervention or motion to intervene, as appropriate. Such notices, motions, or protests must be filed on or before the comment date. Anyone filing a motion to intervene or protest must serve a copy of that document on the Applicant and all the parties in this proceeding.

The Commission encourages electronic submission of protests and interventions in lieu of paper using the ''eFiling'' link at *http://www.ferc.gov*. Persons unable to file electronically should submit an original and 14 copies of the protest or intervention to the Federal Energy Regulatory Commission, 888 First Street, NE., Washington, DC 20426.

This filing is accessible on-line at *http://www.ferc.gov*, using the ''eLibrary'' link and is available for review in the Commission's Public Reference Room in Washington, DC. There is an ''eSubscription'' link on the Web site that enables subscribers to receive e-mail notification when a document is added to a subscribed docket(s). For assistance with any FERC Online service, please e-mail *FERCOnlineSupport@ferc.gov*, or call (866) 208–3676 (toll free). For TTY, call (202) 502–8659.

Comment Date: 5 p.m. Eastern Time on October 31, 2005.

Magalie R. Salas,

Secretary.

[FR Doc. E5–5696 Filed 10–14–05; 8:45 am]

BILLING CODE 6717–01–P

DEPARTMENT OF ENERGY

Federal Energy Regulatory Commission

[Docket No. EL05–152–000]

Montana-Dakota Utilities Co.; Notice of Filing

October 6, 2005.

Take notice that on September 22, 2005, Montana-Dakota Utilities Co., (Montana-Dakota), a Division of MDU Resources Group, Inc. tendered for filing an application for relief from the obligation to purchase power from cogeneration qualifying facilities and small power production qualifying facilities within its service territory in North Dakota, South Dakota and Montana.

Any person desiring to intervene or to protest this filing must file in accordance with Rules 211 and 214 of the Commission's Rules of Practice and Procedure (18 CFR 385.211, 385.214). Protests will be considered by the Commission in determining the appropriate action to be taken, but will not serve to make protestants parties to the proceeding. Any person wishing to become a party must file a notice of intervention or motion to intervene, as appropriate. Such notices, motions, or protests must be filed on or before the comment date. Anyone filing an intervention or protest on or before the intervention or protest date need not serve motions to intervene or protests on persons other than the Applicant.

The Commission encourages electronic submission of protests and interventions in lieu of paper using the ''eFiling'' link at *http://www.ferc.gov.* Persons unable to file electronically should submit an original and 14 copies of the protest or intervention to the Federal Energy Regulatory Commission, 888 First Street, NE., Washington, DC 20426.

This filing is accessible on-line at *http://www.ferc.gov*, using the ''eLibrary'' link and is available for review in the Commission's Public Reference Room in Washington, DC. There is an ''eSubscription'' link on the Web site that enables subscribers to receive e-mail notification when a document is added to a subscribed docket(s). For assistance with any FERC

Online service, please e-mail *FERCOnlineSupport@ferc.gov*, or call (866) 208–3676 (toll free). For TTY, call (202) 502–8659.

Comment Date: 5 p.m. Eastern Time on October 24, 2005.

Magalie R. Salas,

Secretary.

[FR Doc. E5–5671 Filed 10–14–05; 8:45 am]

BILLING CODE 6717–01–P

DEPARTMENT OF ENERGY

Federal Energy Regulatory Commission

[Docket No. RP06–7–000]

National Fuel Gas Supply Corporation; Notice of Tariff Filing

October 6, 2005.

Take notice that on October 3, 2005, National Fuel Gas Supply Corporation (National) tendered for filing as part of its FERC Gas Tariff, Fourth Revised Volume No. 1, Eighty First Revised Sheet No. 9, to become effective October 1, 2005.

Any person desiring to intervene or to protest this filing must file in accordance with Rules 211 and 214 of the Commission's Rules of Practice and Procedure (18 CFR 385.211 and 385.214). Protests will be considered by the Commission in determining the appropriate action to be taken, but will not serve to make protestants parties to the proceeding. Any person wishing to become a party must file a notice of intervention or motion to intervene, as appropriate. Such notices, motions, or protests must be filed in accordance with the provisions of Section 154.210 of the Commission's regulations (18 CFR 154.210). Anyone filing an intervention or protest must serve a copy of that document on the Applicant. Anyone filing an intervention or protest on or before the intervention or protest date need not serve motions to intervene or protests on persons other than the Applicant.

The Commission encourages electronic submission of protests and interventions in lieu of paper using the ''eFiling'' link at *http://www.ferc.gov.* Persons unable to file electronically should submit an original and 14 copies of the protest or intervention to the Federal Energy Regulatory Commission, 888 First Street, NE., Washington, DC 20426.

This filing is accessible on-line at *http://www.ferc.gov*, using the ''eLibrary'' link and is available for review in the Commission's Public Reference Room in Washington, DC. There is an ''eSubscription'' link on the Web site that enables subscribers to receive e-mail notification when a document is added to a subscribed docket(s). For assistance with any FERC Online service, please e-mail *FERCOnlineSupport@ferc.gov*, or call (866) 208–3676 (toll free). For TTY, call (202) 502–8659.

Magalie R. Salas,

Secretary.

[FR Doc. E5–5682 Filed 10–14–05; 8:45 am]

BILLING CODE 6717–01–P

DEPARTMENT OF ENERGY

Federal Energy Regulatory Commission

[Docket No. RP06–4–000]

Natural Gas Pipeline Company of America; Notice of Proposed Changes in FERC Gas Tariff

October 6, 2005.

Take notice that on October 5, 2005, Natural Gas Pipeline Company of America (Natural) tendered for filing as part of its FERC Gas Tariff, Sixth Revised Volume No. 1, Original Sheet No. 414A, to become effective November 5, 2005.

Natural states that the purpose of this filing is to update Natural's list of non-conforming agreements.

Natural states that copies of the filing are being mailed to its customers and interested State commissions.

Any person desiring to intervene or to protest this filing must file in accordance with Rules 211 and 214 of the Commission's Rules of Practice and Procedure (18 CFR 385.211 and 385.214). Protests will be considered by the Commission in determining the appropriate action to be taken, but will not serve to make protestants parties to the proceeding. Any person wishing to become a party must file a notice of intervention or motion to intervene, as appropriate. Such notices, motions, or protests must be filed in accordance with the provisions of Section 154.210 of the Commission's regulations (18 CFR 154.210). Anyone filing an intervention or protest must serve a copy of that document on the Applicant. Anyone filing an intervention or protest on or before the intervention or protest date need not serve motions to intervene or protests on persons other than the Applicant.

The Commission encourages electronic submission of protests and interventions in lieu of paper using the ''eFiling'' link at *http://www.ferc.gov.* Persons unable to file electronically should submit an original and 14 copies of the protest or intervention to the Federal Energy Regulatory Commission, 888 First Street, NE., Washington, DC 20426.

This filing is accessible on-line at *http://www.ferc.gov*, using the ''eLibrary'' link and is available for review in the Commission's Public Reference Room in Washington, DC. There is an ''eSubscription'' link on the Web site that enables subscribers to receive e-mail notification when a document is added to a subscribed docket(s). For assistance with any FERC Online service, please e-mail *FERCOnlineSupport@ferc.gov*, or call (866) 208–3676 (toll free). For TTY, call (202) 502–8659.

Magalie R. Salas,

Secretary.

[FR Doc. E5–5679 Filed 10–14–05; 8:45 am]

BILLING CODE 6717–01–P

DEPARTMENT OF ENERGY

Federal Energy Regulatory Commission

[Docket No. RP06–5–000]

Natural Gas Pipeline Company of America; Notice of Revenue Crediting Report

October 6, 2005.

Take notice that on October 5, 2005, Natural Gas Pipeline Company of America (Natural) filed its Refund Report regarding the penalty revenues for the period January 1, 2005 through June 30, 2005 that it refunded to its customers pursuant to Section 12.8 of the General Terms and Conditions (GT&C) of its FERC Gas Tariff, Sixth Revised Volume No. 1.

Natural states that the purpose of this filing is to inform the Commission of its refund to customers of penalty revenue pursuant to Section 12.8 of Natural's GT&C.

Natural states that copies of the filing are being mailed to its customers and interested state commissions.

Any person desiring to intervene or to protest this filing must file in accordance with Rules 211 and 214 of the Commission's Rules of Practice and Procedure (18 CFR 385.211 and 385.214). Protests will be considered by the Commission in determining the appropriate action to be taken, but will not serve to make protestants parties to the proceeding. Any person wishing to become a party must file a notice of intervention or motion to intervene, as appropriate. Such notices, motions, or protests must be filed on or before the

date as indicated below. Anyone filing an intervention or protest must serve a copy of that document on the Applicant. Anyone filing an intervention or protest on or before the intervention or protest date need not serve motions to intervene or protests on persons other than the Applicant.

The Commission encourages electronic submission of protests and interventions in lieu of paper using the ''eFiling'' link at *http://www.ferc.gov*. Persons unable to file electronically should submit an original and 14 copies of the protest or intervention to the Federal Energy Regulatory Commission, 888 First Street, NE., Washington, DC 20426.

This filing is accessible on-line at *http://www.ferc.gov*, using the ''eLibrary'' link and is available for review in the Commission's Public Reference Room in Washington, DC. There is an ''eSubscription'' link on the Web site that enables subscribers to receive e-mail notification when a document is added to a subscribed docket(s). For assistance with any FERC Online service, please e-mail *FERCOnlineSupport@ferc.gov*, or call (866) 208–3676 (toll free). For TTY, call (202) 502–8659.

Comment Date: 5 p.m. Eastern Time October 14, 2005.

Magalie R. Salas,

Secretary.

[FR Doc. E5–5680 Filed 10–14–05; 8:45 am]

BILLING CODE 6717–01–P

DEPARTMENT OF ENERGY

Federal Energy Regulatory Commission

[Docket No. RP06–6–000]

Natural Gas Pipeline Company of America; Notice of Proposed Changes in FERC Gas Tariff

October 6, 2005.

Take notice that on October 5, 2005, Natural Gas Pipeline Company of America (Natural) tendered for filing as part of its FERC Gas Tariff, Sixth Revised Volume No. 1, the tariff sheets listed on Appendix A to the filing, to become effective November 5, 2005.

Natural states that the purpose of this filing is to update Natural's form of service agreements in its tariff to include one new provision.

Natural states that copies of the filing are being mailed to its customers and interested State commissions.

Any person desiring to intervene or to protest this filing must file in accordance with Rules 211 and 214 of the Commission's Rules of Practice and Procedure (18 CFR 385.211 and 385.214). Protests will be considered by the Commission in determining the appropriate action to be taken, but will not serve to make protestants parties to the proceeding. Any person wishing to become a party must file a notice of intervention or motion to intervene, as appropriate. Such notices, motions, or protests must be filed in accordance with the provisions of Section 154.210 of the Commission's regulations (18 CFR 154.210). Anyone filing an intervention or protest must serve a copy of that document on the Applicant. Anyone filing an intervention or protest on or before the intervention or protest date need not serve motions to intervene or protests on persons other than the Applicant.

The Commission encourages electronic submission of protests and interventions in lieu of paper using the ''eFiling'' link at *http://www.ferc.gov*. Persons unable to file electronically should submit an original and 14 copies of the protest or intervention to the Federal Energy Regulatory Commission, 888 First Street, NE., Washington, DC 20426.

This filing is accessible on-line at *http://www.ferc.gov*, using the ''eLibrary'' link and is available for review in the Commission's Public Reference Room in Washington, DC. There is an ''eSubscription'' link on the Web site that enables subscribers to receive e-mail notification when a document is added to a subscribed docket(s). For assistance with any FERC Online service, please e-mail *FERCOnlineSupport@ferc.gov*, or call (866) 208–3676 (toll free). For TTY, call (202) 502–8659.

Magalie R. Salas,

Secretary.

[FR Doc. E5–5681 Filed 10–14–05; 8:45 am]

BILLING CODE 6717–01–P

DEPARTMENT OF ENERGY

Federal Energy Regulatory Commission

[Docket No. RP99–176–111]

Natural Gas Pipeline Company of America; Notice of Negotiated Rate

October 6, 2005.

Take notice that on September 30, 2005, Natural Gas Pipeline Company of America (Natural) tendered for filing as part of its FERC Gas Tariff, Sixth Revised Volume No. 1, the following tariff sheets, to become effective October 1, 2005:

Second Revised Sheet No. 26W.31.
Original Sheet No. 26W.31b.

Natural states that the purpose of this filing is to implement an amendment to an existing negotiated rate transaction.

Natural states that copies of the filing are being sent to all parties on the official service list.

Any person desiring to intervene or to protest this filing must file in accordance with Rules 211 and 214 of the Commission's Rules of Practice and Procedure (18 CFR 385.211 and 385.214). Protests will be considered by the Commission in determining the appropriate action to be taken, but will not serve to make protestants parties to the proceeding. Any person wishing to become a party must file a notice of intervention or motion to intervene, as appropriate. Such notices, motions, or protests must be filed in accordance with the provisions of Section 154.210 of the Commission's regulations (18 CFR 154.210). Anyone filing an intervention or protest must serve a copy of that document on the Applicant. Anyone filing an intervention or protest on or before the intervention or protest date need not serve motions to intervene or protests on persons other than the Applicant.

The Commission encourages electronic submission of protests and interventions in lieu of paper using the ''eFiling'' link at *http://www.ferc.gov.* Persons unable to file electronically should submit an original and 14 copies of the protest or intervention to the Federal Energy Regulatory Commission, 888 First Street, NE., Washington, DC 20426.

This filing is accessible on-line at *http://www.ferc.gov*, using the ''eLibrary'' link and is available for review in the Commission's Public Reference Room in Washington, DC. There is an ''eSubscription'' link on the Web site that enables subscribers to receive e-mail notification when a document is added to a subscribed docket(s). For assistance with any FERC Online service, please e-mail *FERCOnlineSupport@ferc.gov*, or call (866) 208–3676 (toll free). For TTY, call (202) 502–8659.

Magalie R. Salas,

Secretary.

[FR Doc. E5–5685 Filed 10–14–05; 8:45 am]

BILLING CODE 6717–01–P

DEPARTMENT OF ENERGY

Federal Energy Regulatory Commission

[Docket No. RP05–630–001]

North Baja Pipeline, LLC; Notice of Compliance Filing

October 6, 2005.

Take notice that, on September 28, 2005, North Baja Pipeline, LLC (NBP) submitted a compliance filing pursuant to the Commission's Letter Order issued September 19, 2005, in this proceeding.

NBP states that copies of the filing were served on parties on the official service list.

Any person desiring to protest this filing must file in accordance with Rule 211 of the Commission's Rules of Practice and Procedure (18 CFR 385.211). Protests to this filing will be considered by the Commission in determining the appropriate action to be taken, but will not serve to make protestants parties to the proceeding. Such protests must be filed in accordance with the provisions of Section 154.210 of the Commission's regulations (18 CFR 154.210). Anyone filing a protest must serve a copy of that document on all the parties to the proceeding.

The Commission encourages electronic submission of protests in lieu of paper using the ''eFiling'' link at *http://www.ferc.gov.* Persons unable to file electronically should submit an original and 14 copies of the protest to the Federal Energy Regulatory Commission, 888 First Street, NE., Washington, DC 20426.

This filing is accessible on-line at *http://www.ferc.gov*, using the ''eLibrary'' link and is available for review in the Commission's Public Reference Room in Washington, DC. There is an ''eSubscription'' link on the Web site that enables subscribers to receive e-mail notification when a document is added to a subscribed docket(s). For assistance with any FERC Online service, please e-mail *FERCOnlineSupport@ferc.gov*, or call (866) 208–3676 (toll free). For TTY, call (202) 502–8659.

Magalie R. Salas,

Secretary.

[FR Doc. E5–5674 Filed 10–14–05; 8:45 am]

BILLING CODE 6717–01–P

DEPARTMENT OF ENERGY

Federal Energy Regulatory Commission

[Docket No. RP01–377–008]

Northern Border Pipeline Company; Notice of Compliance Filing

October 6, 2005.

Take notice that on October 3, 2005, Northern Border Pipeline Company (Northern Border) tendered for filing to become part of Northern Border's FERC Gas Tariff, First Revised Volume No. 1, Ninth Revised Sheet No. 99A, to become effective November 1, 2005.

Any person desiring to protest this filing must file in accordance with Rule 211 of the Commission's Rules of Practice and Procedure (18 CFR 385.211). Protests to this filing will be considered by the Commission in determining the appropriate action to be taken, but will not serve to make protestants parties to the proceeding. Such protests must be filed in accordance with the provisions of Section 154.210 of the Commission's regulations (18 CFR 154.210). Anyone filing a protest must serve a copy of that document on all the parties to the proceeding.

The Commission encourages electronic submission of protests in lieu of paper using the ''eFiling'' link at *http://www.ferc.gov*. Persons unable to file electronically should submit an original and 14 copies of the protest to the Federal Energy Regulatory Commission, 888 First Street, NE., Washington, DC 20426.

This filing is accessible on-line at *http://www.ferc.gov*, using the ''eLibrary'' link and is available for review in the Commission's Public Reference Room in Washington, DC. There is an ''eSubscription'' link on the Web site that enables subscribers to receive e-mail notification when a document is added to a subscribed docket(s). For assistance with any FERC Online service, please e-mail *FERCOnlineSupport@ferc.gov*, or call (866) 208–3676 (toll free). For TTY, call (202) 502–8659.

Magalie R. Salas,

Secretary.

[FR Doc. E5–5662 Filed 10–14–05; 8:45 am]

BILLING CODE 6717–01–P

DEPARTMENT OF ENERGY

Federal Energy Regulatory Commission

[Docket No. RP00–404–018]

Northern Natural Gas Company; Notice of Compliance Filing

October 6, 2005.

Take notice that on October 5, 2005, Northern Natural Gas Company (Northern) tendered for filing to become part of its FERC Gas Tariff, Fifth Revised Volume No. 1, the following tariff sheets in compliance with the Commission's September 20, 2005 order in this docket:

Third Revised Sheet No. 260A
Fourth Revised No. 305A

Northern states that the above tariff sheets are being filed to implement Phase 2 of Northern's Field Area segmentation plan and to incorporate within/outside the path scheduling priorities into Northern's tariff.

Northern further states that copies of the filing have been mailed to each of its customers and interested State commissions.

Any person desiring to intervene or to protest this filing must file in accordance with Rules 211 and 214 of the Commission's Rules of Practice and Procedure (18 CFR 385.211 and 385.214). Protests will be considered by the Commission in determining the appropriate action to be taken, but will not serve to make protestants parties to the proceeding. Any person wishing to become a party must file a notice of intervention or motion to intervene, as appropriate. Such notices, motions, or protests must be filed in accordance with the provisions of Section 154.210 of the Commission's regulations (18 CFR 154.210). Anyone filing an intervention or protest must serve a copy of that document on all the parties to the proceeding.

The Commission encourages electronic submission of protests and interventions in lieu of paper using the ''eFiling'' link at *http://www.ferc.gov*. Persons unable to file electronically should submit an original and 14 copies of the protest or intervention to the Federal Energy Regulatory Commission, 888 First Street, NE., Washington, DC 20426.

This filing is accessible on-line at *http://www.ferc.gov*, using the ''eLibrary'' link and is available for review in the Commission's Public Reference Room in Washington, DC. There is an ''eSubscription'' link on the Web site that enables subscribers to receive e-mail notification when a document is added to a subscribed

docket(s). For assistance with any FERC Online service, please e-mail *FERCOnlineSupport@ferc.gov*, or call (866) 208–3676 (toll free). For TTY, call (202) 502–8659.

Magalie R. Salas,

Secretary.

[FR Doc. E5–5661 Filed 10–14–05; 8:45 am]

BILLING CODE 6717–01–P

DEPARTMENT OF ENERGY

Federal Energy Regulatory Commission

[Docket Nos. RP04–280–003 and RP04–94–004]

Northern Natural Gas Company; Notice of SLA Refund Report

October 6, 2005.

Take notice that on October 4, 2005, Northern Natural Gas Company (Northern) tendered for filing a refund report showing refunds that were made to Northern's customers pursuant to Northern's System Levelized Account (SLA) Settlement filed on November 24, 2004 in the above-referenced dockets and approved by the Commission on February 14, 2005.

Northern further states that copies of the filing have been mailed to each of its customers and interested State commissions.

Any person desiring to protest this filing must file in accordance with Rule 211 of the Commission's Rules of Practice and Procedure (18 CFR 385.211). Protests to this filing will be considered by the Commission in determining the appropriate action to be taken, but will not serve to make protestants parties to the proceeding. Such protests must be filed on or before the date as indicated below. Anyone filing a protest must serve a copy of that document on all the parties to the proceeding.

The Commission encourages electronic submission of protests in lieu of paper using the ''eFiling'' link at *http://www.ferc.gov*. Persons unable to file electronically should submit an original and 14 copies of the protest to the Federal Energy Regulatory Commission, 888 First Street, NE., Washington, DC 20426.

This filing is accessible on-line at *http://www.ferc.gov*, using the ''eLibrary'' link and is available for review in the Commission's Public Reference Room in Washington, DC. There is an ''eSubscription'' link on the Web site that enables subscribers to receive e-mail notification when a document is added to a subscribed docket(s). For assistance with any FERC Online service, please e-mail *FERCOnlineSupport@ferc.gov*, or call (866) 208–3676 (toll free). For TTY, call (202) 502–8659.

Comment Date: 5 p.m. Eastern Time on October 14, 2005.

Magalie R. Salas,

Secretary.

[FR Doc. E5–5666 Filed 10–14–05; 8:45 am]

BILLING CODE 6717–01–P

DEPARTMENT OF ENERGY

Federal Energy Regulatory Commission

[Docket No. RP06–2–000]

Northern Natural Gas Company; Notice of Proposed Changes in FERC Gas Tariff

October 6, 2005.

Take notice that on October 5, 2005, Northern Natural Gas Company (Northern), tendered for filing as part of its FERC Gas Tariff, Fifth Revised Volume No. 1, Twelfth Revised Sheet No. 66C, with an effective date of November 1, 2005.

Northern states that it is filing the above-referenced tariff sheet pursuant to section 4 of the Natural Gas Act to reflect the non-conforming TFX Service Agreement with Northern States Power-Generation.

Northern further states that copies of the filing have been mailed to each of its customers and interested State commissions.

Any person desiring to intervene or to protest this filing must file in accordance with Rules 211 and 214 of the Commission's Rules of Practice and Procedure (18 CFR 385.211 and 385.214). Protests will be considered by the Commission in determining the appropriate action to be taken, but will not serve to make protestants parties to the proceeding. Any person wishing to become a party must file a notice of intervention or motion to intervene, as appropriate. Such notices, motions, or protests must be filed in accordance with the provisions of Section 154.210 of the Commission's regulations (18 CFR 154.210). Anyone filing an intervention or protest must serve a copy of that document on the Applicant. Anyone filing an intervention or protest on or before the intervention or protest date need not serve motions to intervene or protests on persons other than the Applicant.

The Commission encourages electronic submission of protests and interventions in lieu of paper using the ''eFiling'' link at *http://www.ferc.gov.* Persons unable to file electronically should submit an original and 14 copies of the protest or intervention to the Federal Energy Regulatory Commission, 888 First Street, NE., Washington, DC 20426.

This filing is accessible on-line at *http://www.ferc.gov,* using the ''eLibrary'' link and is available for review in the Commission's Public Reference Room in Washington, DC. There is an ''eSubscription'' link on the Web site that enables subscribers to receive e-mail notification when a document is added to a subscribed docket(s). For assistance with any FERC Online service, please e-mail *FERCOnlineSupport@ferc.gov,* or call (866) 208–3676 (toll free). For TTY, call (202) 502–8659.

Magalie R. Salas,

Secretary.

[FR Doc. E5–5677 Filed 10–14–05; 8:45 am]

BILLING CODE 6717–01–P

DEPARTMENT OF ENERGY

Federal Energy Regulatory Commission

[Docket No. RP05–704–000]

SCG Pipeline, Inc.; Notice of Tariff Filing

October 6, 2005.

Take notice that on September 30, 2005, SCG Pipeline, Inc. (SCG) tendered for filing as part of its FERC Gas Tariff, Original Volume No. 1, Third Revised Sheet No. 8 to be effective November 1, 2005.

SCG states that a copy of this filing has been served upon all of its customers and affected State commissions.

Any person desiring to intervene or to protest this filing must file in accordance with Rules 211 and 214 of the Commission's Rules of Practice and Procedure (18 CFR 385.211 and 385.214). Protests will be considered by the Commission in determining the appropriate action to be taken, but will not serve to make protestants parties to the proceeding. Any person wishing to become a party must file a notice of intervention or motion to intervene, as appropriate. Such notices, motions, or protests must be filed in accordance with the provisions of section 154.210 of the Commission's regulations (18 CFR 154.210). Anyone filing an intervention or protest must serve a copy of that document on the Applicant. Anyone filing an intervention or protest on or before the intervention or protest date

need not serve motions to intervene or protests on persons other than the Applicant.

The Commission encourages electronic submission of protests and interventions in lieu of paper using the ''eFiling'' link at *http://www.ferc.gov*. Persons unable to file electronically should submit an original and 14 copies of the protest or intervention to the Federal Energy Regulatory Commission, 888 First Street, NE., Washington, DC 20426.

This filing is accessible on-line at *http://www.ferc.gov*, using the ''eLibrary'' link and is available for review in the Commission's Public Reference Room in Washington, DC. There is an ''eSubscription'' link on the Web site that enables subscribers to receive e-mail notification when a document is added to a subscribed docket(s). For assistance with any FERC Online service, please e-mail *FERCOnlineSupport@ferc.gov*, or call (866) 208–3676 (toll free). For TTY, call (202) 502–8659.

Magalie R. Salas,

Secretary.

[FR Doc. E5–5675 Filed 10–14–05; 8:45 am]

BILLING CODE 6717–01–P

DEPARTMENT OF ENERGY

Federal Energy Regulatory Commission

[Docket Nos. EL05–102–000; EL05–102–001; ER97–4166–018; ER97–4166–021; ER96–780–007; ER96–780–010; EL05–104–000; EL05–104–001]

Southern Company Services, Inc., Southern Company Energy Marketing, L.P. and Southern Company Services, Inc.; Notice of Designation of Commission Staff as Non-Decisional

October 11, 2005.

Effective October 3, 2005, Marlene Stein, of the Federal Energy Regulatory Commission (Commission), was designated as non-decisional staff in the above-captioned dockets. As non-decisional staff, Ms. Stein will not participate in an advisory capacity in deliberations on the issues pending therein. In addition, as non-decisional staff, Ms. Stein will also take no part in the Commission's review of any offer of settlement. Separated non-decisional and advisory staffs are prohibited from communicating with one another concerning the deliberations set forth above, including any pertinent settlement offer.

Magalie R. Salas,

Secretary.

[FR Doc. E5–5695 Filed 10–14–05; 8:45 am]

BILLING CODE 6717–01–P

DEPARTMENT OF ENERGY

Federal Energy Regulatory Commission

[Docket No. RP97–255–064]

TransColorado Gas Transmission Company; Notice of Tariff Filing

October 6, 2005.

Take notice that on September 30, 2005, TransColorado Gas Transmission Company (TransColorado) tendered for filing as part of its FERC Gas Tariff, First Revised Volume No. 1, the following tariff sheets, to be effective October 1, 2005:

Ninth Revised Sheet No. 21
Sixth Revised Sheet No. 22A
Second Revised Sheet No. 22B

TransColorado states that the filing is being made in compliance with the Commission's Letter Order issued March 20, 1997, in Docket No. RP97–255–000.

TransColorado states that a copy of this filing has been served upon all parties to this proceeding, TransColorado's customers, the Colorado Public Utilities Commission and the New Mexico Public Utilities Commission.

Any person desiring to protest this filing must file in accordance with Rule 211 of the Commission's Rules of Practice and Procedure (18 CFR 385.211). Protests to this filing will be considered by the Commission in determining the appropriate action to be taken, but will not serve to make protestants parties to the proceeding. Such protests must be filed in accordance with the provisions of Section 154.210 of the Commission's regulations (18 CFR 154.210). Anyone filing a protest must serve a copy of that document on all the parties to the proceeding.

The Commission encourages electronic submission of protests in lieu of paper using the ''eFiling'' link at *http://www.ferc.gov*. Persons unable to file electronically should submit an original and 14 copies of the protest to the Federal Energy Regulatory Commission, 888 First Street, NE., Washington, DC 20426.

This filing is accessible on-line at *http://www.ferc.gov*, using the ''eLibrary'' link and is available for review in the Commission's Public Reference Room in Washington, DC. There is an ''eSubscription'' link on the Web site that enables subscribers to receive e-mail notification when a document is added to a subscribed docket(s). For assistance with any FERC Online service, please e-mail *FERCOnlineSupport@ferc.gov*, or call (866) 208–3676 (toll free). For TTY, call (202) 502–8659.

Magalie R. Salas,

Secretary.

[FR Doc. E5–5684 Filed 10–14–05; 8:45 am]

BILLING CODE 6717–01–P

DEPARTMENT OF ENERGY

Federal Energy Regulatory Commission

[Docket No. RP02–99–011]

Transcontinental Gas Pipe Line Corporation; Notice of Compliance Filing

October 6, 2005.

Take notice that on September 29, 2005, Transcontinental Gas Pipe Line Corporation (Transco) tendered for filing as part of its FERC Gas Tariff, Third Revised Volume No. 1, the following tariff sheets, to become effective November 1, 2005:

Tenth Revised Sheet No. 2
Tenth Revised Sheet No. 33
Fourth Revised Sheet No. 169
Second Revised Sheet No. 169A
Fourth Revised Sheet No. 445
First Revised Sheet No. 446
First Revised Sheet No. 447
Second Revised Sheet No. 448
Second Revised Sheet No. 449

Transco states that the purpose of the instant filing is to reflect the removal of the North Padre Island gathering (NPI-G) rate, rate schedule and form of service agreement from Transco's Third Revised Volume No. 1 tariff pursuant to Ordering Paragraph (B) of the Commission's Order on Remand issued February 15, 2005 in Docket No. RP02–99–009.

Transco states that copies of the filing are being mailed to affected customers and interested state commissions.

Any person desiring to protest this filing must file in accordance with Rule 211 of the Commission's Rules of Practice and Procedure (18 CFR 385.211). Protests to this filing will be considered by the Commission in determining the appropriate action to be taken, but will not serve to make protestants parties to the proceeding. Such protests must be filed in accordance with the provisions of

Section 154.210 of the Commission's regulations (18 CFR 154.210). Anyone filing a protest must serve a copy of that document on all the parties to the proceeding.

The Commission encourages electronic submission of protests in lieu of paper using the ''eFiling'' link at *http://www.ferc.gov.* Persons unable to file electronically should submit an original and 14 copies of the protest to the Federal Energy Regulatory Commission, 888 First Street, NE., Washington, DC 20426.

This filing is accessible on-line at *http://www.ferc.gov*, using the ''eLibrary'' link and is available for review in the Commission's Public Reference Room in Washington, DC. There is an ''eSubscription'' link on the Web site that enables subscribers to receive e-mail notification when a document is added to a subscribed docket(s). For assistance with any FERC Online service, please e-mail *FERCOnlineSupport@ferc.gov*, or call (866) 208–3676 (toll free). For TTY, call (202) 502–8659.

Magalie R. Salas,

Secretary.

[FR Doc. E5–5664 Filed 10–14–05; 8:45 am]

BILLING CODE 6717–01–P

DEPARTMENT OF ENERGY

Federal Energy Regulatory Commission

[Docket No. RP06–1–000]

Transcontinental Gas Pipe Line Corporation; Notice of Proposed Changes in FERC Gas Tariff

October 6, 2005.

Take notice that on October 3, 2005, Transcontinental Gas Pipe Line Corporation (Transco) tendered for filing as part of its FERC Gas Tariff, Third Revised Volume No. 1, the following tariff sheets, to become effective October 1, 2005:

Fortieth Revised Sheet No. 27
Thirty-First Revised Sheet No. 28
Fifty-Fifth Revised Sheet No. 28A
Thirty-Fourth Revised Sheet No. 28C
Fifty-Ninth Revised Sheet No. 50

Transco states that copies of the filing are being mailed to affected customers and interested State Commissions.

Any person desiring to intervene or to protest this filing must file in accordance with Rules 211 and 214 of the Commission's Rules of Practice and Procedure (18 CFR 385.211 and 385.214). Protests will be considered by the Commission in determining the appropriate action to be taken, but will not serve to make protestants parties to the proceeding. Any person wishing to become a party must file a notice of intervention or motion to intervene, as appropriate. Such notices, motions, or protests must be filed in accordance with the provisions of Section 154.210 of the Commission's regulations (18 CFR 154.210). Anyone filing an intervention or protest must serve a copy of that document on the Applicant. Anyone filing an intervention or protest on or before the intervention or protest date need not serve motions to intervene or protests on persons other than the Applicant.

The Commission encourages electronic submission of protests and interventions in lieu of paper using the ''eFiling'' link at *http://www.ferc.gov*. Persons unable to file electronically should submit an original and 14 copies of the protest or intervention to the Federal Energy Regulatory Commission, 888 First Street, NE., Washington, DC 20426.

This filing is accessible on-line at *http://www.ferc.gov*, using the ''eLibrary'' link and is available for review in the Commission's Public Reference Room in Washington, DC. There is an ''eSubscription'' link on the Web site that enables subscribers to receive e-mail notification when a document is added to a subscribed docket(s). For assistance with any FERC Online service, please e-mail *FERCOnlineSupport@ferc.gov*, or call (866) 208–3676 (toll free). For TTY, call (202) 502–8659.

Magalie R. Salas,

Secretary.

[FR Doc. E5–5676 Filed 10–14–05; 8:45 am]

BILLING CODE 6717–01–P

DEPARTMENT OF ENERGY

Federal Energy Regulatory Commission

[Docket No. RP96–359–028]

Transcontinental Gas Pipe Line Corporation; Notice of Negotiated Rate

October 6, 2005.

Take notice that on September 30, 2005 Transcontinental Gas Pipe Line Corporation (Transco) tendered for filing copies of nineteen executed service agreements between Transco and Municipal Gas Authority of Georgia under Transco's Rate Schedule FT that contain negotiated rates for firm transportation service under Transco's SouthCoast, Sundance, and Momentum Expansion Projects. The effective date of these service agreements is October 1, 2005.

Any person desiring to intervene or to protest this filing must file in accordance with Rules 211 and 214 of the Commission's Rules of Practice and Procedure (18 CFR 385.211 and 385.214). Protests will be considered by the Commission in determining the appropriate action to be taken, but will not serve to make protestants parties to the proceeding. Any person wishing to become a party must file a notice of intervention or motion to intervene, as appropriate. Such notices, motions, or protests must be filed in accordance with the provisions of Section 154.210 of the Commission's regulations (18 CFR 154.210). Anyone filing an intervention or protest must serve a copy of that document on the Applicant. Anyone filing an intervention or protest on or before the intervention or protest date need not serve motions to intervene or protests on persons other than the Applicant.

The Commission encourages electronic submission of protests and interventions in lieu of paper using the ''eFiling'' link at *http://www.ferc.gov*. Persons unable to file electronically should submit an original and 14 copies of the protest or intervention to the Federal Energy Regulatory Commission, 888 First Street, NE., Washington, DC 20426.

This filing is accessible on-line at *http://www.ferc.gov*, using the ''eLibrary'' link and is available for review in the Commission's Public Reference Room in Washington, DC. There is an ''eSubscription'' link on the Web site that enables subscribers to receive e-mail notification when a document is added to a subscribed docket(s). For assistance with any FERC Online service, please e-mail *FERCOnlineSupport@ferc.gov*, or call (866) 208–3676 (toll free). For TTY, call (202) 502–8659.

Magalie R. Salas,

Secretary.

[FR Doc. E5–5683 Filed 10–14–05; 8:45 am]

BILLING CODE 6717–01–P

DEPARTMENT OF ENERGY

Federal Energy Regulatory Commission

[Docket No. CP06–3–000]

Trunkline LNG Company, LLC; Notice of Filing

October 11, 2005.

Take notice that on October 5, 2005, Trunkline LNG Company, LLC

(Trunkline LNG), P.O. Box 4967, Houston, Texas 77210–4967, filed an abbreviated application, pursuant to section 7(c) of the Natural Gas Act (NGA) and part 157 of the Commission's Rules and Regulations, for a Certificate of Public Convenience and Necessity requesting authorization to acquire an undivided 50% interest in a gas turbine power generator and appurtenant facilities located at Trunkline LNG's liquefied natural gas (LNG) terminal near Lake Charles, Louisiana. The application is on file with the Commission and open for public inspection. This filing is available for review at the Commission in the Public Reference Room or may be viewed on the Commission's Web site at *http://www.ferc.gov* using the ''eLibrary'' link. Enter the docket number excluding the last three digits in the docket number field to access the document. For assistance, please contact FERC Online Support at *FERCOnlineSupport@ferc.gov* or toll free at (866) 208–3676, or for TTY, contact (202) 502–8659.

Trunkline LNG proposes to acquire an undivided 50% ownership interest in an existing gas turbine/generator, Unit 2204—JA, and appurtenant facilities from PLCG, formerly CMS Panhandle Lake Charles Generation, LLC, formerly PanEnergy Lake Charles Generation, Inc. Trunkline LNG will continue to use Unit 2204—JA with its 16 megawatts of generating capability as a back-up power source for ship unloading and emergency back-up power needs. The acquisition of the facilities will be in place and will not result in any ground disturbance.

Any questions regarding the application are to be directed to William W. Grygar, Vice President of Rates and Regulatory Affairs, 5444 Westheimer Road, Houston, Texas 77056–5306; phone number (713) 989–7000.

Any person wishing to obtain legal status by becoming a party to the proceedings for this project should, on or before the below listed comment date, file with the Federal Energy Regulatory Commission, 888 First Street, NE., Washington, DC 20426, a motion to intervene in accordance with the requirements of the Commission's Rules of Practice and Procedure (18 CFR 385.214 or 385.211) and the Regulations under the NGA (18 CFR 157.10). A person obtaining party status will be placed on the service list maintained by the Secretary of the Commission and will receive copies of all documents filed by the applicant and by all other parties. A party must submit 14 copies of filings made with the Commission and must mail a copy to the applicant and to every other party in the proceeding. Only parties to the proceeding can ask for court review of Commission orders in the proceeding.

Motions to intervene, protests and comments may be filed electronically via the Internet in lieu of paper, see, 18 CFR 385.2001(a)(1)(iii) and the instructions on the Commission's Web site under the ''e-Filing'' link. The Commission strongly encourages electronic filings.

Comment Date: November 1, 2005.

Magalie R. Salas,

Secretary.

[FR Doc. E5–5701 Filed 10–14–05; 8:45 am]

BILLING CODE 6717–01–P

DEPARTMENT OF ENERGY

Federal Energy Regulatory Commission

[Docket No. RP03–323–007]

Williston Basin Interstate Pipeline Company; Notice of Negotiated Rate

October 6, 2005.

Take notice that on September 30, 2005, Williston Basin Interstate Pipeline Company (Williston Basin), tendered for filing with the Commission a revised negotiated Rate Schedule FT–1 Service Agreement. The proposed effective date of the service agreement is October 1, 2005.

Any person desiring to intervene or to protest this filing must file in accordance with Rules 211 and 214 of the Commission's Rules of Practice and Procedure (18 CFR 385.211 and 385.214). Protests will be considered by the Commission in determining the appropriate action to be taken, but will not serve to make protestants parties to the proceeding. Any person wishing to become a party must file a notice of intervention or motion to intervene, as appropriate. Such notices, motions, or protests must be filed in accordance with the provisions of Section 154.210 of the Commission's regulations (18 CFR 154.210). Anyone filing an intervention or protest must serve a copy of that document on the Applicant. Anyone filing an intervention or protest on or before the intervention or protest date need not serve motions to intervene or protests on persons other than the Applicant.

The Commission encourages electronic submission of protests and interventions in lieu of paper using the ''eFiling'' link at *http://www.ferc.gov.* Persons unable to file electronically should submit an original and 14 copies of the protest or intervention to the Federal Energy Regulatory Commission, 888 First Street, NE., Washington, DC 20426.

This filing is accessible on-line at *http://www.ferc.gov*, using the ''eLibrary'' link and is available for review in the Commission's Public Reference Room in Washington, DC. There is an ''eSubscription'' link on the Web site that enables subscribers to receive e-mail notification when a document is added to a subscribed docket(s). For assistance with any FERC Online service, please e-mail *FERCOnlineSupport@ferc.gov*, or call (866) 208–3676 (toll free). For TTY, call (202) 502–8659.

Magalie R. Salas,

Secretary.

[FR Doc. E5–5665 Filed 10–14–05; 8:45 am]

BILLING CODE 6717–01–P

DEPARTMENT OF ENERGY

Federal Energy Regulatory Commission

[Docket No. QF88–61–004]

Woodland Biomass Power, Ltd.; Notice of Filing

October 6, 2005.

Take notice that on October 3, 2005, Woodland Biomass Power, Ltd. (Woodland) and DTE Woodland, LLC (DTE) filed with the Commission a joint application for certification of a 28 MW small power production facility located in Woodland, California as a qualifying small power production facility pursuant to 18 CFR 292.207(b) of the Commission's regulations.

Any person desiring to intervene or to protest this filing must file in accordance with Rules 211 and 214 of the Commission's Rules of Practice and Procedure (18 CFR 385.211, 385.214). Protests will be considered by the Commission in determining the appropriate action to be taken, but will not serve to make protestants parties to the proceeding. Any person wishing to become a party must file a notice of intervention or motion to intervene, as appropriate. Such notices, motions, or protests must be filed on or before the comment date. Anyone filing a motion to intervene or protest must serve a copy of that document on the Applicant and all the parties in this proceeding.

The Commission encourages electronic submission of protests and interventions in lieu of paper using the ''eFiling'' link at *http://www.ferc.gov.* Persons unable to file electronically should submit an original and 14 copies of the protest or intervention to the

Federal Energy Regulatory Commission, 888 First Street, NE., Washington, DC 20426.

This filing is accessible on-line at *http://www.ferc.gov*, using the ''eLibrary'' link and is available for review in the Commission's Public Reference Room in Washington, DC. There is an ''eSubscription'' link on the Web site that enables subscribers to receive e-mail notification when a document is added to a subscribed docket(s). For assistance with any FERC Online service, please e-mail *FERCOnlineSupport@ferc.gov*, or call (866) 208–3676 (toll free). For TTY, call (202) 502–8659.

Comment Date: 5 p.m. Eastern Time on October 14, 2005.

Magalie R. Salas,

Secretary.

[FR Doc. E5–5672 Filed 10–14–05; 8:45 am]

BILLING CODE 6717–01–P

DEPARTMENT OF ENERGY

Federal Energy Regulatory Commission

[Docket No. EL06–1–000]

Niagara Mohawk Power Corporation, a National Grid Company, Complainant v. New York State Reliability Council, L.L.C. and New York Independent System Operator, Inc., Respondent; Notice of Complaint

October 11, 2005.

Take notice that on October 6, 2005, Niagara Mohawk Power Corporation, a National Grid Company (National Grid), pursuant to section 206 of the Commission's Rules of Practice and Procedure, 18 CFR 385.206, filed a Complaint against the New York State Reliability Council (NYSRC) and New York Independent System Operator (NYISO) requesting that the Commission issue an order directing: (1) NYSRC to make certain changes in its methodology for determining the region's Installed Reserves Margin and installed Capacity Requirement; (2) NYISO to file, as needed, conforming amendments to its tariff and manuals; and (3) any other relief as the Commission deems just and proper.

Any person desiring to intervene or to protest this filing must file in accordance with Rules 211 and 214 of the Commission's Rules of Practice and Procedure (18 CFR 385.211 and 385.214). Protests will be considered by the Commission in determining the appropriate action to be taken, but will not serve to make protestants parties to the proceeding. Any person wishing to become a party must file a notice of intervention or motion to intervene, as appropriate. Such notices, motions, or protests must be filed on or before the comment date. Anyone filing a motion to intervene or protest must serve a copy of that document on the Applicant and all parties to this proceeding.

The Commission encourages electronic submission of protests and interventions in lieu of paper using the ''eFiling'' link at *http://www.ferc.gov.* Persons unable to file electronically should submit an original and 14 copies of the protest or intervention to the Federal Energy Regulatory Commission, 888 First Street, NE., Washington, DC 20426.

This filing is accessible on-line at *http://www.ferc.gov,* using the ''eLibrary'' link and is available for review in the Commission's Public Reference Room in Washington, DC. There is an ''eSubscription'' link on the Web site that enables subscribers to receive e-mail notification when a document is added to a subscribed docket(s). For assistance with any FERC Online service, please e-mail *FERCOnlineSupport@ferc.gov,* or call (866) 208–3676 (toll free). For TTY, call (202) 502–8659.

Comment Date: 5 p.m. Eastern Time on October 26, 2005.

Magalie R. Salas,

Secretary.

[FR Doc. E5–5697 Filed 10–14–05; 8:45 am]

BILLING CODE 6717–01–P

DEPARTMENT OF ENERGY

Federal Energy Regulatory Commission

[Docket No. CP05–364–000]

ANR Pipeline Company; Notice of Availability of the Environmental Assessment for the Proposed Wisconsin 2005 Expansion Project

October 7, 2005.

The staff of the Federal Energy Regulatory Commission (FERC or Commission) has prepared an environmental assessment (EA) on the natural gas pipeline facilities proposed by ANR Pipeline Company (ANR) in the above-referenced dockets.

The EA was prepared to satisfy the requirements of the National Environmental Policy Act. The staff concludes that approval of the proposed project, with appropriate mitigating measures, would not constitute a major Federal action significantly affecting the quality of the human environment.

The EA assesses the potential environmental effects of the construction and operation of the proposed project. ANR proposes to install a total of 6.86 miles of pipeline, add a compressor unit at an existing compressor station, construct a new compressor station, and perform minor upgrade work at 5 existing meter stations in Wisconsin. Specifically, the project includes:

- About 3.08 miles of 16-inch outside diameter (OD) looping [1] pipeline (designated as the Little Chute Loop) in Outagamie County, WI;
- About 3.78 miles of 30-inch OD looping pipeline (designated as the Madison Lateral Loop in Rock County, WI;
- A new 2,370 horsepower (hp) reciprocating compressor unit and associated equipment at the existing Janesville Compressor Station in Rock County, WI;
- A new 20,620 hp compressor station comprised of two 10,310 hp units to be built at an existing meter station site (designated as the Goodman Compressor Station) in Marinette County, WI; and
- 5 existing meter station upgrades in Dane, Marathon, and Columbia Counties, WI.

The purpose of the proposed facilities would be to create about 168,241 decatherms per day of incremental firm capacity on its pipeline system to accommodate growth in demand from all market segments in Wisconsin.

The EA has been placed in the public files of the FERC. A limited number of copies of the EA are available for distribution and public inspection at: Federal Energy Regulatory Commission, Public Reference Room, 888 First Street, NE., Room 2A, Washington, DC 20426, (202) 502–8371.

Copies of the EA have been mailed to Federal, State and local agencies, public interest groups, interested individuals, newspapers, and parties to this proceeding.

Any person wishing to comment on the EA may do so. To ensure consideration prior to a Commission decision on the proposal, it is important that we receive your comments before the date specified below. Please carefully follow these instructions to ensure that your comments are received in time and properly recorded:

- Send an original and two copies of your comments to: Secretary, Federal Energy Regulatory Commission, 888

[1] A loop is a segment of pipeline installed adjacent to an existing pipeline which connects to the existing pipeline at both ends of the loop. The loop allows more gas to be moved through the system.

First St., NE., Room 1A, Washington, DC 20426.

• Label one copy of the comments for the attention of the Gas Branch 2, PJ11.2 Reference Docket No. CP05–364–000; and

• Mail your comments so that they will be received in Washington, DC on or before November 7, 2005.

Please note that we are continuing to experience delays in mail deliveries from the U.S. Postal Service. As a result, we will include all comments that we receive within a reasonable time frame in our environmental analysis of this project. However, the Commission strongly encourages electronic filing of any comments or interventions or protests to this proceeding. See 18 CFR 385.2001(a)(1)(iii) and the instructions on the Commission's Web site at *http://www.ferc.gov* under the ''e-Filing'' link and the link to the User's Guide. Before you can file comments you will need to create a free account which can be created by clicking on ''Sign-up.''

Comments will be considered by the Commission but will not serve to make the commentor a party to the proceeding. Any person seeking to become a party to the proceeding must file a motion to intervene pursuant to Rule 214 of the Commission's Rules of Practice and Procedures (18 CFR 385.214).[2] Only intervenors have the right to seek rehearing of the Commission's decision.

Affected landowners and parties with environmental concerns may be granted intervenor status upon showing good cause by stating that they have a clear and direct interest in this proceeding which would not be adequately represented by any other parties. You do not need intervenor status to have your comments considered.

Additional information about the project is available from the Commission's Office of External Affairs, at 1–866–208–FERC or on the FERC Internet Web site (*http://www.ferc.gov*) using the eLibrary link. Click on the eLibrary link, click on ''General Search'' and enter the docket number excluding the last three digits in the Docket Number field. Be sure you have selected an appropriate date range. For assistance, please contact FERC Online Support at *FercOnlineSupport@ferc.gov* or toll free at 1–866–208–3676, or for TTY, contact (202) 502–8659. The eLibrary link also provides access to the texts of formal documents issued by the Commission, such as orders, notices, and rulemakings.

In addition, the Commission now offers a free service called eSubscription which allows you to keep track of all formal issuances and submittals in specific dockets. This can reduce the amount of time you spend researching proceedings by automatically providing you with notification of these filings, document summaries and direct links to the documents. Go to *http://www.ferc.gov/esubscribenow.htm*.

Magalie R. Salas,

Secretary.

[FR Doc. E5–5705 Filed 10–14–05; 8:45 am]

BILLING CODE 6717–01–P

[2] Interventions may also be filed electronically via the Internet in lieu of paper. See the previous discussion on filing comments electronically.

DEPARTMENT OF ENERGY

Federal Energy Regulatory Commission

[FERC Docket No. CP04–58–000, CP04–58–001, CP04–58–002, and CP04–58–003; POLB Application No. HDP 03–079 SCH No. 2003091130]

Port of Long Beach, Sound Energy Solutions; Notice of Availability/Completion of the Draft Environmental Impact Statement/Report, Draft General Conformity Determination, and Draft Port Master Plan Amendment for the Proposed Long Beach LNG Import Project

October 7, 2005.

The environmental staffs of the Federal Energy Regulatory Commission (FERC or Commission) and the Port of Long Beach (POLB) have prepared a draft Environmental Impact Statement/Environmental Impact Report (EIS/EIR) on the liquefied natural gas (LNG) import terminal and natural gas pipeline facilities proposed by Sound Energy Solutions (SES) in the above-referenced dockets. The draft EIS/EIR was prepared to satisfy the requirements of the National Environmental Policy Act (NEPA) and the California Environmental Quality Act (CEQA). A draft General Conformity Determination was also prepared by the FERC to assess the potential air quality impacts associated with construction and operation of the proposed project and is included as Appendix E of the draft EIS/EIR.

The draft EIS/EIR includes an Application Summary Report that was prepared by the POLB pursuant to the requirements of the CEQA, the certified Port Master Plan (PMP), and the California Coastal Act for the proposed project. Based on data contained in the draft EIS/EIR and Application Summary Report, the proposed project is in conformance with the stated policies of the PMP. An amendment to the PMP would be necessary, however, to accommodate the LNG facility because LNG is not an expressly identified ''hazardous cargo'' as permitted within Terminal Island Planning District 4. The POLB has submitted a draft PMP amendment (draft PMP Amendment No. 20) to the California Coastal Commission in conjunction with submittal of the draft EIS/EIR.

The U.S. Army Corps of Engineers (ACOE) is participating as a cooperating agency in the preparation of the EIS/EIR because the project would require permits pursuant to section 404 of the Clean Water Act [33 United States Code (U.S.C.) 1344] and section 10 of the Rivers and Harbors Act (33 U.S.C. 403). The ACOE must comply with the requirements of NEPA before issuing these permits. The ACOE would adopt the EIS/EIR per Title 40 Code of Federal Regulations (CFR) section 1506.3 if, after an independent review of the document, it concludes that its comments and suggestions have been satisfied.

The U.S. Coast Guard (Coast Guard) within the U.S. Department of Homeland Security has elected to act as a cooperating agency in the preparation of the EIS/EIR because it exercises regulatory authority over LNG facilities that affect the safety and security of port areas and navigable waterways under Executive Order 10173; the Magnuson Act (50 U.S.C. 191); the Ports and Waterways Safety Act of 1972, as amended (33 U.S.C. 1221, *et seq.*); and the Maritime Transportation Security Act of 2002 (46 U.S.C. 701). The Coast Guard also has authority for LNG facility security plan review, approval and compliance verification as provided in Title 33 CFR part 105, and siting as it pertains to the management of vessel traffic in and around the LNG facility. As required by its regulations, the Coast Guard is responsible for issuing a Letter of Recommendation (LOR) as to the suitability of the waterway for LNG marine traffic. The Coast Guard plans to adopt the EIS/EIR if it adequately covers the impacts associated with issuance of the LOR.

SES' proposed facilities would provide up to 1 billion standard cubic feet per day of natural gas to southern California, supply up to 150,000 gallons per day of LNG vehicle fuel, and provide storage of up to 320,000 cubic meters of imported LNG to reduce fluctuations in the local natural gas supply. In order to provide LNG import, storage, and pipeline transportation services, SES requests authorization to

construct, install, and operate an LNG import terminal and natural gas pipeline facilities.

The draft EIS/EIR addresses the potential environmental effects of the construction and operation of the following facilities:

- A 1,100-foot-long LNG ship berth and unloading facility with unloading arms, mooring and breasting dolphins, and a fendering system that would be capable of unloading one ship at a time;
- Two LNG storage tanks, each with a gross volume of 160,000 cubic meters (1,006,000 barrels) surrounded by a security barrier wall;
- 20 electric-powered booster pumps;
- Four shell and tube vaporizers using a primary, closed-loop water system;
- Three boil-off gas compressors, a condensing system, a natural gas liquids recovery system, and an export ethane (C_2) heater;
- An LNG trailer truck loading facility with a small LNG storage tank;
- A natural gas meter station and odorization system;
- Utilities, buildings, and service facilities;
- Associated hazard detection, control, and prevention systems; site security facilities; cryogenic piping; and insulation, electrical, and instrumentation systems;
- A 2.3-mile-long, 36-inch-diameter pipeline and associated aboveground facilities to transport natural gas from the LNG terminal to the existing local distribution system; and
- A 4.6-mile-long, 10-inch-diameter pipeline and associated aboveground facilities to transport vaporized C_2 from the LNG terminal to an existing refinery.

Comment Procedures and Public Meetings

Any person wishing to comment on the draft EIS/EIR, draft General Conformity Determination, and/or draft PMP Amendment No. 20 may do so. To expedite the receipt and consideration of your comments, electronic submission of comments is strongly encouraged. See Title 18 CFR 385.2001(a)(1)(iii) and the instructions on the FERC's Internet Web site (*http://www.ferc.gov*) under the eFiling link and the link to the User's Guide. Before you can submit comments, you will need to create a free account by clicking on ''Sign-up'' under ''New User.'' You will be asked to select the type of submission you are making. This type of submission is considered a ''Comment on Filing.'' Comments submitted electronically must be submitted by December 8, 2005.

If you wish to mail comments on the draft EIS/EIR, draft General Conformity Determination, and/or draft PMP Amendment No. 20, please mail your comments so that they will be received in Washington, DC on or before December 8, 2005 and carefully follow these instructions:

Send an original and two copies of your letter to:

- Magalie R. Salas, Secretary, Federal Energy Regulatory Commission, 888 First Street, NE., Room 1A, Washington, DC 20426;
- Reference FERC Docket No. CP04–58–000, *et al.* and POLB Application No. HDP 03–079 on the original and both copies;
- Label one copy of your comments for the attention of the Gas Branch 1, DG2E;
- Send an additional copy of your letter to: Robert Kanter, Ph.D., Planning Division, 925 Harbor Plaza, Port of Long Beach, Long Beach, CA 90802.

In lieu of or in addition to sending written comments, we invite you to attend the joint public comment meeting that the staffs of the FERC and the POLB (Agency Staffs) will conduct in the project area to receive comments on the draft EIS/EIR, draft General Conformity Determination, and draft PMP Amendment No. 20. The joint meeting is scheduled as follows: Monday, November 14, 2005, 6 p.m. (PST), City of Long Beach, City Council Chambers, 333 W. Ocean Boulevard, Long Beach, CA 90802. (562) 570–6555.

The joint meeting will be posted on the FERC's calendar located at *http://www.ferc.gov/EventCalendar/EventsList.aspx.* Interested groups and individuals are encouraged to attend and present oral comments on the draft EIS/EIR, draft General Conformity Determination, and/or draft PMP Amendment No. 20. A transcript of the meeting will be prepared.

In accordance with the POLB's new protocols for preparing environmental documents, the POLB will hold three additional public comment meetings for interested groups and individuals to attend and present oral comments on the draft EIS/EIR and/or draft PMP Amendment No. 20. Transcripts of these meetings will be prepared. The additional meetings are scheduled as follows:

Date	Location
Tuesday, November 15, 2005, 6 p.m. (PST)	David Starr Jordan High School, 6550 Atlantic Avenue, Long Beach, CA 90805. (562) 423–1471.
Wednesday, November 30, 2005, 6 p.m. (PST)	Robert A. Millikan High School, 2800 Snowden Avenue, Long Beach, CA 90815. (562) 425–7441.
Thursday, December 1, 2005, 6 p.m. (PST)	Juan Rodriguez Cabrillo High School, 2001 Santa Fe Avenue, Long Beach, CA 90810. (562) 951–7700.

After the comments from the meetings are reviewed, any significant new issues are investigated, and modifications are made to the draft EIS/EIR and draft General Conformity Determination, a final EIS/EIR, including a final General Conformity Determination, will be published and distributed. The final EIS/EIR will contain the Agency Staffs' responses to timely comments received on the draft EIS/EIR and draft General Conformity Determination.

In addition, the POLB will consider comments on draft PMP Amendment No. 20 and prepare a final PMP amendment. The final PMP amendment will be presented to the Board of Harbor Commissioners for consideration of adoption when the final EIS/EIR is presented for certification. If the Board of Harbor Commissioners adopts the PMP amendment and certifies the final EIS/EIR, the PMP amendment will be submitted to the California Coastal Commission for review and certification. The POLB draft PMP Amendment No. 20 proposes to allow for the development of an LNG import terminal at Berth 126 on Pier T in the Terminal Island District (Planning District 4) of the POLB. The proposed project, if approved, is appealable to the California Coastal Commission. Copies of draft PMP Amendment No. 20 and the draft EIS/EIR are available to the public at the Harbor Department Administration Building or requests may be made to the Harbor Department, Planning Division at (562) 590–4158.

Comments on the draft EIS/EIR, draft General Conformity Determination, and draft PMP Amendment No. 20 will be considered by the FERC and the POLB but will not serve to make the commentor a party to the proceeding.

Any person seeking to become a party to the proceeding must file a motion to intervene pursuant to Rule 214 of the FERC's Rules of Practice and Procedures (Title 18 CFR part 385.214).

Anyone may intervene in this proceeding based on the draft EIS/EIR. You must file your request to intervene as specified above.[1] You do not need intervenor status to have your comments considered and responded to.

The draft EIS/EIR, including the draft General Conformity Determination, has been placed in the public files of the FERC and the POLB and is available for public inspection at: Federal Energy Regulatory Commission, Public Reference Room, 888 First Street, NE., Room 2A, Washington, DC 20426. (202) 502–8371 and Port of Long Beach, Planning Division, 925 Harbor Plaza, Long Beach, CA 90802. (562) 590–4160.

The draft EIS/EIR, including the draft General Conformity Determination, is also available for viewing on the FERC Internet Web site (*http://www.ferc.gov*) using the eLibrary link (see instructions for using eLibrary below).

A limited number of copies are available from the FERC's Public Reference Room and as .pdf files on compact disk (CD) from the POLB as identified above. Copies of draft PMP Amendment No. 20 are available from the POLB as identified above. In addition, copies of the draft EIS/EIR, including the draft General Conformity Determination, have been mailed to Federal, State, and local agencies; elected officials; environmental and public interest groups; Native American tribes; affected landowners; POLB tenants; intervenors in the FERC's proceeding; local libraries and newspapers; and other interested parties.

To reduce printing and mailing costs the final EIS/EIR will be issued in both CD and hard-copy formats. In a separate mailing, the parties on the current mailing list for the draft EIS/EIR will be sent a postcard providing an opportunity for them to select which format of the final EIS/EIR they wish to receive. The FERC and the POLB are strongly encouraging the use of the CD format in their publication of large documents. If you wish to receive a paper copy of the final EIS/EIR instead of a CD, you must return the postcard indicating that choice.

Additional information about the project is available from the FERC's Office of External Affairs, at 1–866–208–FERC or on the FERC Internet Web site (*http://www.ferc.gov*) using the eLibrary link. Click on the eLibrary link, click on ''General Search,'' and enter the docket number excluding the last three digits in the Docket Number field. Be sure you have selected an appropriate date range. For assistance, please contact FERC Online Support at *FERCOnlineSupport@ferc.gov* or toll free at 1–866–208–3676, or for TTY, contact (202) 502–8659. The eLibrary link on the FERC Internet Web site also provides access to the texts of formal documents issued by the FERC, such as orders, notices, and rulemakings.

In addition, the FERC now offers a free service called eSubscription that allows you to keep track of all formal issuances and submittals in specific dockets. This can reduce the amount of time you spend researching proceedings by automatically providing you with notification of these filings, document summaries, and direct links to the documents. To register for this service, go to the eSubscription link on the FERC Internet Web site.

Information about the project is also available from the POLB by calling the POLB Environmental Planning Division at (562) 590–4160.

Magalie R. Salas,

Secretary.

[FR Doc. E5–5706 Filed 10–14–05; 8:45 am]

BILLING CODE 6717–01–P

[1] Interventions may also be filed electronically via the Internet in lieu of paper. See the previous discussion on filing comments electronically.

DEPARTMENT OF ENERGY

Federal Energy Regulatory Commission

[Docket Nos. CP05–355–000 and CP05–352–000]

Tennessee Gas Pipeline Company; National Fuel Gas Supply Corporation; Notice of Availability of the Environmental Assessment for the Proposed Northeast ConneXion—NY/NJ Project

October 7, 2005.

The staff of the Federal Energy Regulatory Commission (FERC or Commission) has prepared an environmental assessment (EA) on the natural gas pipeline facilities proposed by Tennessee Gas Pipeline Company (Tennessee) & National Fuel Gas Supply Corporation (National) in the above-referenced dockets.

The EA was prepared to satisfy the requirements of the National Environmental Policy Act. The staff concludes that approval of the proposed project, with appropriate mitigating measures, would not constitute a major Federal action significantly affecting the quality of the human environment.

The EA assesses the potential environmental effects of the construction and operation of the proposed project as follows:

- Construct and operate 6.0 miles of 30-inch-diameter natural gas pipeline that would loop Tennessee's existing Line 300 in Susquehanna and Bradford County, Pennsylvania;
- Additional compression and enhance dehydration facilities at Compressor Station 313 in Potter County, Pennsylvania;
- Uprate a compressor unit by software changes at Compressor Station 317 in Bradford County, Pennsylvania;
- Upgrade its Ramsey Meter Station in Bergen County, New Jersey; and
- Use additional capacity created by the installation of two compressor turbine drivers under Docket No. CP05–42–000 at Compressor Station 325 in Sussex County, New Jersey.

The purpose of the proposed facilities would be to provide up to 50,000 dekatherms per day (Dthd) of incremental firm transportation capacity and 51,500 Dthd of incremental storage deliverability for Public Service Electric and Gas Company.

The EA has been placed in the public files of the FERC. A limited number of copies of the EA are available for distribution and public inspection at: Federal Energy Regulatory Commission, Public Reference Room, 888 First Street, NE., Room 2A, Washington, DC 20426, (202) 502–8371.

Copies of the EA have been mailed to Federal, State and local agencies, public interest groups, interested individuals, newspapers, and parties to this proceeding.

Any person wishing to comment on the EA may do so. To ensure consideration prior to a Commission decision on the proposal, it is important that we receive your comments before the date specified below. Please carefully follow these instructions to ensure that your comments are received in time and properly recorded:

- Send an original and two copies of your comments to: Magalie R. Salas, Secretary, Federal Energy Regulatory Commission, 888 First St., NE., Room 1A, Washington, DC 20426.
- Reference Docket No. CP05–355–000 and CP05–352–000.
- Label one copy of the comments for the attention of the Gas Branch 1, PJ–11.1; and
- Mail your comments so that they will be received in Washington, DC on or before November 7, 2005.

Please note that the Commission strongly encourages electronic filing of

any comments or interventions or protests to this proceeding. See 18 CFR 385.2001(a)(1)(iii) and the instructions on the Commission's Web site at *http://www.ferc.gov* under the ''e-Filing'' link and the link to the User's Guide. Before you can file comments you will need to create an account which can be created on-line.

Comments will be considered by the Commission but will not serve to make the commentor a party to the proceeding. Any person seeking to become a party to the proceeding must file a motion to intervene pursuant to Rule 214 of the Commission's Rules of Practice and Procedures (18 CFR 385.214).[1] Only intervenors have the right to seek rehearing of the Commission's decision.

Affected landowners and parties with environmental concerns may be granted intervenor status upon showing good cause by stating that they have a clear and direct interest in this proceeding which would not be adequately represented by any other parties. You do not need intervenor status to have your comments considered.

Additional information about the project is available from the Commission's Office of External Affairs, at 1–866–208–FERC or on the FERC Internet Web site (*http://www.ferc.gov*) using the eLibrary link. Click on the eLibrary link, click on ''General Search'' and enter the docket number excluding the last three digits in the Docket Number field. Be sure you have selected an appropriate date range. For assistance, please contact FERC Online Support at *FercOnlineSupport@ferc.gov* or toll free at 1–866–208–3676, or for TTY, contact (202) 502–8659. The eLibrary link also provides access to the texts of formal documents issued by the Commission, such as orders, notices, and rulemakings.

In addition, the Commission now offers a free service called eSubscription which allows you to keep track of all formal issuances and submittals in specific dockets. This can reduce the amount of time you spend researching proceedings by automatically providing you with notification of these filings, document summaries and direct links to the documents. Go to *http://www.ferc.gov/esubscribenow.htm.*

Magalie R. Salas,

Secretary.

[FR Doc. E5–5704 Filed 10–14–05; 8:45 am]

BILLING CODE 6717–01–P

[1] Interventions may also be filed electronically via the Internet in lieu of paper. See the previous discussion on filing comments electronically.

DEPARTMENT OF ENERGY

Federal Energy Regulatory Commission

[Docket No. CP05–412–000]

Tennessee Gas Pipeline Company; Notice of Intent To Prepare an Environmental Assessment for the Proposed Northeast ConneXion Project—New England and Request for Comments on Environmental Issues

October 6, 2005.

The staff of the Federal Energy Regulatory Commission (FERC or Commission) will prepare an environmental assessment (EA) that will discuss the environmental impacts of the Northeast ConneXion Project—New England involving construction, abandonment, and operation of facilities by Tennessee Gas Pipeline Company Tennessee).[1] The proposed facilities consist of the installation of additional compression at four of its existing compressor stations in Potter County, Pennsylvania; Onondaga, Herkimer, and Schoharie Counties, New York; the abandonment and installation of additional compression at two existing compressor stations in Columbia County, New York, and Worcester County, Massachusetts; and the construction of one new compressor station in Steuben County, New York. Tennessee will install 55,400 horsepower (hp) and replace 10,500 hp for a net total of 44,900 hp of compression. No construction of pipeline is proposed. This EA will be used by the Commission in its decision-making process to determine whether the project is in the public convenience and necessity. Tennessee indicates that the proposed facilities will enable it to provide up to 136,300 decatherms per day of incremental firm transportation capacity.

If you are a landowner receiving this notice, you may be contacted by a pipeline company representative about the acquisition of an easement to construct, operate, and maintain the proposed facilities. The pipeline company would seek to negotiate a mutually acceptable agreement. However, if the project is approved by the Commission, that approval conveys with it the right of eminent domain. Therefore, if easement negotiations fail to produce an agreement, the pipeline company could initiate condemnation proceedings in accordance with State law.

[1] Tennessee's application was filed with the Commission under section 7 of the Natural Gas Act and part 157 of the Commission's regulations.

A fact sheet prepared by the FERC entitled ''An Interstate Natural Gas Facility On My Land? What Do I Need To Know?'' was attached to the project notice Tennessee provided to landowners. This fact sheet addresses a number of typically asked questions, including the use of eminent domain and how to participate in the Commission's proceedings. It is available for viewing on the FERC Internet Web site (*www.ferc.gov*).

Summary of the Proposed Project

Tennessee seeks authority for the:

- Installation of two additional 3,550-hp CAT 3612 compressor units at each of the existing Compressor Stations 241, 245, and 249 located in Onondaga, Herkimer, and Schoharie Counties, New York;
- Replacement of an existing 4,500-hp compressor unit with a single 10,300-hp Solar Taurus 70S turbine-driven compressor unit at existing Compressor 254 in Columbia County, New York;
- Replacement of three existing compressor units totaling 6,000 hp with the installation of two 6,275-hp Solar Centaur 50L turbine-driven compressor units (12,550 hp total) at existing Compressor Station 264 in Worcester County, Massachusetts;
- Installation of one additional 3,550-hp CAT 3612 compressor unit at existing Compressor Station 313 in Potter County, Pennsylvania; and
- Construction of new Compressor Station 405A, with a single 7,700-hp Solar Taurus 60S turbine-driven compressor unit in Steuben County, New York.

Tennessee indicates that it will install ''appurtenant facilities'' to the project pursuant to section 2.55(a) of the regulations.

The location of the project facilities and alternative sites for the new compressor station is shown in Appendix 1.[2]

Land Requirements for Construction

The new Compressor Station 405A would require about 20.0 acres of land of which about 10.0 acres would be used during construction. Following construction, about 3.2 acres would be maintained as the new aboveground facility site. Tennessee would not need

[2] The appendices referenced in this notice are not being printed in the **Federal Register**. Copies of all appendices, other than Appendix 1 (maps), are available on the Commission's Web site at the ''eLibrary'' link or from the Commission's Public Reference Room, 888 First Street, NE., Washington, DC 20426, or call (202) 502–8371. For instructions on connecting to eLibrary refer to the last page of this notice. Copies of the appendices were sent to all those receiving this notice in the mail.

to acquire any additional acreage or land for the proposed modifications at the existing compressor stations.

The EA Process

The National Environmental Policy Act (NEPA) requires the Commission to take into account the environmental impacts that could result from an action whenever it considers the issuance of a Certificate of Public Convenience and Necessity. NEPA also requires us to discover and address concerns the public may have about proposals. This process is referred to as ''scoping''. The main goal of the scoping process is to focus the analysis in the EA on the important environmental issues. By this Notice of Intent, the Commission staff requests public comments on the scope of the issues to address in the EA. All comments received are considered during the preparation of the EA. State and local government representatives are encouraged to notify their constituents of this proposed action and encourage them to comment on their areas of concern.

In the EA we [3] will discuss impacts that could occur as a result of the construction and operation of the proposed project under these general headings:

- Geology and soils;
- Ground water resources;
- Vegetation and wildlife;
- Endangered and threatened species;
- Public safety;
- Land use;
- Cultural resources;
- Air quality and noise; and
- Hazardous waste.

We will not discuss impacts to the following resource areas since they are not present in the project area, or would not be affected by the proposed facilities: Surface water resources, fisheries, and wetlands.

We will also evaluate possible alternatives to the proposed project or portions of the project, and make recommendations on how to lessen or avoid impacts on the various resource areas.

Our independent analysis of the issues will be in the EA. Depending on the comments received during the scoping process, the EA may be published and mailed to Federal, State, and local agencies, public interest groups, interested individuals, affected landowners, newspapers, libraries, and the Commission's official service list for this proceeding. A comment period will be allotted for review if the EA is published. We will consider all comments on the EA before we make our recommendations to the Commission.

To ensure your comments are considered, please carefully follow the instructions in the public participation section below

Currently Identified Environmental Issue

We have identified noise as an issue that we think deserves attention based on a preliminary review of the proposed facilities and the environmental information provided by Tennessee. This preliminary issue may be changed based on your comments and our analysis.

Public Participation

You can make a difference by providing us with your specific comments or concerns about the project. By becoming a commentor, your concerns will be addressed in the EA and considered by the Commission. You should focus on the potential environmental effects of the proposal, alternatives to the proposal (including alternative locations), and measures to avoid or lessen environmental impact. The more specific your comments, the more useful they will be. Please carefully follow these instructions to ensure that your comments are received in time and properly recorded:

- Send an original and two copies of your letter to: Magalia R. Salas, Secretary, Federal Energy Regulatory Commission, 888 First St., NE., Room 1A, Washington, DC 20426.
- Label one copy of the comments for the attention of Gas Branch 2.
- Reference Docket No. CP05–412–000.
- Mail your comments so that they will be received in Washington, DC on or before November 7, 2005.

Please note that we are continuing to experience delays in mail deliveries from the U.S. Postal Service. As a result, we will include all comments that we receive within a reasonable time frame in our environmental analysis of this project. However, the Commission strongly encourages electronic filing of any comments or interventions or protests to this proceeding. See 18 CFR 385.2001(a)(1)(iii) and the instructions on the Commission's Web site at *http://www.ferc.gov* under the ''e-Filing'' link and the link to the User's Guide. Before you can file comments you will need to create a free account which can be created on-line.

We may mail the EA for comment. If you are interested in receiving it, please return the Information Request (Appendix 2). If you do not return the Information Request, you will be taken off the mailing list.

Becoming an Intervenor

In addition to involvement in the EA scoping process, you may want to become an official party to the proceeding, or ''intervenor''. To become an intervenor you must file a motion to intervene according to Rule 214 of the Commission's Rules of Practice and Procedure (18 CFR 385.214). Intervenors have the right to seek rehearing of the Commission's decision. Motions to Intervene should be electronically submitted using the Commission's eFiling system at *http://www.ferc.gov.* Persons without Internet access should send an original and 14 copies of their motion to the Secretary of the Commission at the address indicated previously. Persons filing Motions to Intervene on or before the comment deadline indicated above must send a copy of the motion to the Applicant. All filings, including late interventions, submitted after the comment deadline must be served on the Applicant and all other intervenors identified on the Commission's service list for this proceeding. Persons on the service list with e-mail addresses may be served electronically; others must be served a hard copy of the filing.

Affected landowners and parties with environmental concerns may be granted intervenor status upon showing good cause by stating that they have a clear and direct interest in this proceeding which would not be adequately represented by any other parties. You do not need intervenor status to have your environmental comments considered.

Environmental Mailing List

An effort is being made to send this notice to all individuals, organizations, and government entities interested in and/or potentially affected by the proposed project. This includes all landowners who are potential right-of-way grantors, whose property may be used temporarily for project purposes, or who own homes within distances defined in the Commission's regulations of certain aboveground facilities.

Additional Information

Additional information about the project is available from the Commission's Office of External Affairs, at 1–866–208–FERC or on the FERC Internet Web site (*http://www.ferc.gov*) using the eLibrary link. Click on the eLibrary link, click on ''General Search'' and enter the docket number excluding the last three digits in the Docket Number field. Be sure you have selected

[3] ''We'', ''us'', and ''our'' refer to the environmental staff of the Office of Energy Projects (OEP).

an appropriate date range. For assistance, please contact FERC Online Support at *FercOnlineSupport@ferc.gov* or toll free at 1–866–208–3676, or for TTY, contact (202) 502–8659. The eLibrary link also provides access to the texts of formal documents issued by the Commission, such as orders, notices, and rulemakings.

In addition, the Commission now offers a free service called eSubscription which allows you to keep track of all formal issuances and submittals in specific dockets. This can reduce the amount of time you spend researching proceedings by automatically providing you with notification of these filings, document summaries and direct links to the documents. Go to *http://www.ferc.gov/esubscribenow.htm.*

Finally, public meetings or site visits will be posted on the Commission's calendar located at *http://www.ferc.gov/EventCalendar/EventsList.aspx* along with other related information.

Magalie R. Salas,

Secretary.

[FR Doc. E5–5657 Filed 10–14–05; 8:45 am]

BILLING CODE 6717–01–P

DEPARTMENT OF ENERGY

Federal Energy Regulatory Commission

[Docket No. CP05–392–000]

Texas Eastern Transmission, LP; Notice of Intent To Prepare an Environmental Assessment for the Proposed Accident Storage Enhancement Project and Request for Comments on Environmental Issues

October 6, 2005.

The staff of the Federal Energy Regulatory Commission (FERC or Commission) will prepare an environmental assessment (EA) that will discuss the environmental impacts of the Accident Storage Enhancement Project involving construction and operation of facilities by Texas Eastern Transmission, LP (Texas Eastern) near the town of Accident in Garrett County, Maryland.[1] The proposed facilities include new storage wells, field pipelines and appurtenances, reworking of wellhead valves, grounding and surge protection modifications, related facilities. This EA will be used by the Commission in its decisionmaking process to determine whether the project is in the public convenience and necessity.

If you are a landowner receiving this notice, you may be contacted by a pipeline company representative about the acquisition of an easement to construct, operate, and maintain the proposed facilities. The pipeline company would seek to negotiate a mutually acceptable agreement. However, if the project is approved by the Commission, that approval conveys with it the right of eminent domain. Therefore, if easement negotiations fail to produce an agreement, the pipeline company could initiate condemnation proceedings in accordance with State law.

A fact sheet prepared by the FERC entitled ''An Interstate Natural Gas Facility On My Land? What Do I Need To Know?'' was attached to the project notice Texas Eastern provided to landowners. This fact sheet addresses a number of typically asked questions, including the use of eminent domain and how to participate in the Commission's proceedings. It is available for viewing on the FERC Internet Web site (*http://www.ferc.gov*).

Summary of the Proposed Project

Texas Eastern is proposing to provide additional working gas capacity and increase reliability at its Accident Storage Field in Garrett County, Maryland by increasing injection capability, expanding the working gas capacity by 3.0 billion cubic feet and enhance withdrawal. Texas Eastern's proposed activities include:

- Reworking of 38 existing wells;
- Re-enter and drill-out horizontally, 7 wells;
- Installation of communication and grounding/surge protection on 54 wells;
- Replacement of wellhead valves on 15 wellheads;
- Installation of new slug catcher facilities on three field laterals;
- Drilling 2 new horizontal wells;
- Installing approximately 0.8 mile of gather pipeline; and
- Construction of 4 new access roads and appurtenant equipment.

The general location of the project facilities is shown in Appendix 1.[2]

Land Requirements for Construction

Construction of all project facilities, including pipelines, well pads, access roads, a pipe storage yard and extra workspaces would impact approximately 21.43 acres.

Following construction, about 6.32 acres would be maintained as new aboveground facility sites, access roads, or permanent pipeline right-of-way. The remaining 15.11 acres of land would be restored and allowed to revert to its former use.

The EA Process

The National Environmental Policy Act (NEPA) requires the Commission to take into account the environmental impacts that could result from an action whenever it considers the issuance of a Certificate of Public Convenience and Necessity. NEPA also requires us to discover and address concerns the public may have about proposals. This process is referred to as ''scoping''. The main goal of the scoping process is to focus the analysis in the EA on the important environmental issues. By this Notice of Intent, the Commission staff requests public comments on the scope of the issues to address in the EA. All comments received are considered during the preparation of the EA. State and local government representatives are encouraged to notify their constituents of this proposed action and encourage them to comment on their areas of concern.

In the EA we[3] will discuss impacts that could occur as a result of the construction and operation of the proposed project under these general headings:

- Geology and soils;
- Water resources and wetlands;
- Fisheries, vegetation, and wildlife;
- Endangered and threatened species;
- Land use, recreation, and visual resources;
- Cultural resources;
- Air quality and noise; and
- Reliability and safety.

We will also evaluate possible alternatives to the proposed project or portions of the project, and make recommendations on how to lessen or avoid impacts on the various resource areas.

Our independent analysis of the issues will be in the EA. Depending on the comments received during the scoping process, the EA may be published and mailed to Federal, State, and local agencies, public interest groups, interested individuals, affected landowners, newspapers, libraries, and the Commission's official service list for this proceeding. A comment period will

[1] Texas Eastern's application was filed with the Commission under section 7 of the Natural Gas Act and part 157 of the Commission's regulations.

[2] The appendices referenced in this notice are not being printed in the **Federal Register**. Copies of all appendices, other than Appendix 1 (maps), are available on the Commission's Website at the ''eLibrary'' link or from the Commission's Public Reference Room, 888 First Street, NE., Washington, DC 20426, or call (202) 502–8371. For instructions on connecting to eLibrary refer to the last page of this notice. Copies of the appendices were sent to all those receiving this notice in the mail.

[3] ''We'', ''us'', and ''our'' refer to the environmental staff of the Office of Energy Projects (OEP).

be allotted for review if the EA is published. We will consider all comments on the EA before we make our recommendations to the Commission.

To ensure your comments are considered, please carefully follow the instructions in the public participation section beginning on page 4.

Currently Identified Environmental Issues

We have already identified several issues that we think deserve attention based on a preliminary review of the proposed facilities and the environmental information provided by Texas Eastern. This preliminary list of issues may be changed based on your comments and our analysis.

- Noise impacts due to well drilling on local residences.
- Wetland and stream impacts.
- Surface water quality in Youghiogheny River watershed.
- Construction and Operations Safety.

Public Participation

You can make a difference by providing us with your specific comments or concerns about the project. By becoming a commentor, your concerns will be addressed in the EA and considered by the Commission. You should focus on the potential environmental effects of the proposal, alternatives to the proposal (including alternative locations/routes), and measures to avoid or lessen environmental impact. The more specific your comments, the more useful they will be. Please carefully follow these instructions to ensure that your comments are received in time and properly recorded:

- Send an original and two copies of your letter to: Magalie R. Salas, Secretary, Federal Energy Regulatory Commission, 888 First St., NE., Room 1A, Washington, DC 20426.
- Label one copy of the comments for the attention of OEP/DG2E—Gas Branch 3.
- Reference Docket No. CP05–392–000.
- Mail your comments so that they will be received in Washington, DC on or before November 7, 2005.

Please note that we are continuing to experience delays in mail deliveries from the U.S. Postal Service. As a result, we will include all comments that we receive within a reasonable time frame in our environmental analysis of this project. However, the Commission strongly encourages electronic filing of any comments or interventions or protests to this proceeding. See 18 CFR 385.2001(a)(1)(iii) and the instructions on the Commission's Web site at *http://www.ferc.gov* under the ''e-Filing'' link and the link to the User's Guide. Before you can file comments you will need to create a free account which can be created on-line.

We may mail the EA for comment. If you are interested in receiving it, please return the Information Request (Appendix 3). If you do not return the Information Request, you will be taken off the mailing list.

Becoming an Intervenor

In addition to involvement in the EA scoping process, you may want to become an official party to the proceeding, or ''intervenor''. To become an intervenor you must file a motion to intervene according to Rule 214 of the Commission's Rules of Practice and Procedure (18 CFR 385.214). Intervenors have the right to seek rehearing of the Commission's decision. Motions to Intervene should be electronically submitted using the Commission's eFiling system at *http://www.ferc.gov*. Persons without Internet access should send an original and 14 copies of their motion to the Secretary of the Commission at the address indicated previously. Persons filing Motions to Intervene on or before the comment deadline indicated above must send a copy of the motion to the Applicant. All filings, including late interventions, submitted after the comment deadline must be served on the Applicant and all other intervenors identified on the Commission's service list for this proceeding. Persons on the service list with email addresses may be served electronically; others must be served a hard copy of the filing.

Affected landowners and parties with environmental concerns may be granted intervenor status upon showing good cause by stating that they have a clear and direct interest in this proceeding which would not be adequately represented by any other parties. You do not need intervenor status to have your environmental comments considered.

Environmental Mailing List

An effort is being made to send this notice to all individuals, organizations, and government entities interested in and/or potentially affected by the proposed project. This includes all landowners who are potential right-of-way grantors, whose property may be used temporarily for project purposes, or who own homes within distances defined in the Commission's regulations of certain aboveground facilities. By this notice we are also asking governmental agencies, especially those in Appendix 2, to express their interest in becoming cooperating agencies for the preparation of the EA.

Additional Information

Additional information about the project is available from the Commission's Office of External Affairs, at 1–866–208–FERC or on the FERC Internet Web site (*http://www.ferc.gov*) using the eLibrary link. Click on the eLibrary link, click on ''General Search'' and enter the docket number excluding the last three digits in the Docket Number field. Be sure you have selected an appropriate date range. For assistance, please contact FERC Online Support at *FercOnlineSupport@ferc.gov* or toll free at 1–866–208–3676, or for TTY, contact (202) 502–8659. The eLibrary link also provides access to the texts of formal documents issued by the Commission, such as orders, notices, and rulemakings.

In addition, the Commission now offers a free service called eSubscription which allows you to keep track of all formal issuances and submittals in specific dockets. This can reduce the amount of time you spend researching proceedings by automatically providing you with notification of these filings, document summaries and direct links to the documents. Go to *http://www.ferc.gov/esubscribenow.htm.*

Finally, public meetings or site visits will be posted on the Commission's calendar located at *http://www.ferc.gov/EventCalendar/EventsList.aspx* along with other related information.

Magalie R. Salas,

Secretary.

[FR Doc. E5–5654 Filed 10–14–05; 8:45 am]

BILLING CODE 6717–01–P

DEPARTMENT OF ENERGY

Federal Energy Regulatory Commission

Notice of Application for Surrender of License With Dam Removal and Soliciting Comments, Motions To Intervene, and Protests

October 11, 2005.

a. *Type of Application:* Application for Surrender of License and Dam Removal.

b. *Project Number:* P–11433–016.

c. *Date Filed:* October 3, 2005.

d. *Applicant:* Madison Electric Works.

e. *Name of Project:* Sandy River Project (FERC No. 11433).

f. *Location:* The project is located on the Sandy River, near the town of Starks/Norridgewock, in Somerset County, Maine.

g. *Filed Pursuant to:* Federal Power Act, 16 U.S.C. 791(a)–825(r) and 799 and 801.

h. *Applicant Contact:* Calvin Ames, Superintendent, 6 Business Park Drive, Madison, Maine 04950. Phone: (207) 696–4401.

i. *FERC Contact:* Any questions on this notice should be addressed to Robert Fletcher at (202) 502–8901, or e-mail address: *robert.fletcher@ferc.gov*.

j. *Deadline for filing comments and or motions:* November 10, 2005.

k. *Description of Request:* Madison Electric Works proposes to surrender its project license for the Sandy River Project. As part of the application, MEW requests Commission approval to remove the entire dam structure from the intake to the western shore in order to allow fish passage at the project. The powerhouse and western abutment will remain intact.

l. *Locations of the Application:* A copy of the application is available for inspection and reproduction at the Commission's Public Reference Room, located at 888 First Street, NE., Room 2A, Washington, DC 20426, or by calling (202) 502–8371. This filing may also be viewed on the Commission's Web site at *http://www.ferc.gov* using the ''eLibrary'' link. Enter the docket number excluding the last three digits in the docket number field (P–11433) to access the document. You may also register online at *http://www.ferc.gov/docs-filing/esubscription.asp* to be notified via e-mail of new filings and issuances related to this or other pending projects. For assistance, call 1–866–208–3676 or e-mail *FERCOnlineSupport@ferc.gov*, for TTY, call (202) 502–8659. A copy is also available for inspection and reproduction at the address in item (h) above.

m. Individuals desiring to be included on the Commission's mailing list should so indicate by writing to the Secretary of the Commission.

n. Comments, Protests, or Motions to Intervene—Anyone may submit comments, a protest, or a motion to intervene in accordance with the requirements of Rules of Practice and Procedure, 18 CFR 385.210, .211, .214. In determining the appropriate action to take, the Commission will consider all protests or other comments filed, but only those who file a motion to intervene in accordance with the Commission's Rules may become a party to the proceeding. Any comments, protests, or motions to intervene must be received on or before the specified comment date for the particular application.

o. Filing and Service of Responsive Documents—Any filings must bear in all capital letters the title ''COMMENTS'', ''RECOMMENDATIONS FOR TERMS AND CONDITIONS'', ''PROTEST'', OR ''MOTION TO INTERVENE'', as applicable, and the Project Number of the particular application to which the filing refers (p–11433–016). All documents (original and eight copies) should be filed with: Magalie R. Salas, Secretary, Federal Energy Regulatory Commission, 888 First Street, NE., Washington, DC 20426. A copy of any motion to intervene must also be served upon each representative of the Applicant specified in the particular application.

p. Agency Comments—Federal, State, and local agencies are invited to file comments on the described application. A copy of the application may be obtained by agencies directly from the Applicant. If an agency does not file comments within the time specified for filing comments, it will be presumed to have no comments. One copy of an agency's comments must also be sent to the Applicant's representatives.

q. Comments, protests and interventions may be filed electronically via the Internet in lieu of paper. See, 18 CFR 385.2001(a)(1)(iii) and the instructions on the Commission's Web site at *http://www.ferc.gov* under the ''e-Filing'' link.

Magalie R. Salas,

Secretary.

[FR Doc. E5–5699 Filed 10–14–05; 8:45 am]

BILLING CODE 6717–01–P

DEPARTMENT OF ENERGY

Federal Energy Regulatory Commission

Notice of Application for Amendment of License and Soliciting Comments, Motions To Intervene, and Protests

October 11, 2005.

Take notice that the following application has been filed with the Commission and is available for public inspection:

a. *Application Type:* Amendment of license.

b. *Project No:* 20–065.

c. *Date Filed:* August 16, 2005.

d. *Applicant:* PacifiCorp.

e. *Name of Project:* Cove Development.

f. *Location:* The project is located on the Bear River in Caribou and Franklin Counties, Idaho.

g. *Filed Pursuant to:* Federal Power Act, 16 U.S.C. 791a–825r.

h. *Applicant Contacts:* Monte Garrett, Project Manager, PacifiCorp, 1500 Lloyd Center Tower, 825 NE. Multnomah Street, Portland, OR 97232–2135. Telephone: (503) 813–6629.

i. *FERC Contact:* Any questions on this notice should be addressed to Mr. Hong Tung at (202) 502–8757, or e-mail address: *hong.tung@ferc.gov*.

j. *Deadline for filing comments and or motions:* November 14, 2005.

k. *Description of Request:* The licensee proposes to amend the project license to remove the Cove Development, and to reduce minimum flow requirements in the Grace Development bypassed reach. The licensee states that removal of the Cove Development in accordance with the terms of the Offer of Settlement would enhance environmental resources in the project area, and reductions in Grace Development bypassed reach minimum flows would partially offset the cost of Cove Development removal.

l. *Locations of Applications:* A copy of the application is available for inspection and reproduction at the Commission in the Public Reference Room, located at 888 First Street, NE., Room 2A, Washington, DC 20426, or by calling (202) 502–8371. This filing may also be viewed on the Commission's Web site at *http://www.ferc.gov* using the ''eLibrary'' link. Enter the docket number excluding the last three digits in the docket number field to access the document. You may also register online at *http://www.ferc.gov/docs-filing/esubscription.asp* to be notified via e-mail of new filings and issuances related to this or other pending projects. For assistance, call toll-free 1–866–208–3676 or e-mail *FERCOnlineSupport@ferc.gov*. For TTY, call (202) 502–8659. A copy is also available for inspection and reproduction at the address in item (h) above.

m. Individuals desiring to be included on the Commission's mailing list should so indicate by writing to the Secretary of the Commission.

n. Comments, Protests, or Motions to Intervene—Anyone may submit comments, a protest, or a motion to intervene in accordance with the requirements of Rules of Practice and Procedure, 18 CFR 385.210, .211, .214. In determining the appropriate action to take, the Commission will consider all protests or other comments filed, but only those who file a motion to intervene in accordance with the Commission's Rules may become a party to the proceeding. Any comments, protests, or motions to intervene must be received on or before the specified

comment date for the particular application.

o. Filing and Service of Responsive Documents—Any filings must bear in all capital letters the title ''COMMENTS'', ''RECOMMENDATIONS FOR TERMS AND CONDITIONS'', ''PROTEST'', OR ''MOTION TO INTERVENE'', as applicable, and the Project Number of the particular application to which the filing refers. All documents (original and eight copies) should be filed with: Magalie R. Salas, Secretary, Federal Energy Regulatory Commission, 888 First Street, NE., Washington, DC 20426. A copy of any motion to intervene must also be served upon each representative of the Applicant specified in the particular application.

p. Agency Comments—Federal, State, and local agencies are invited to file comments on the described application. A copy of the application may be obtained by agencies directly from the Applicant. If an agency does not file comments within the time specified for filing comments, it will be presumed to have no comments. One copy of an agency's comments must also be sent to the Applicant's representatives.

q. Comments, protests and interventions may be filed electronically via the Internet in lieu of paper. See, 18 CFR 385.2001(a)(1)(iii) and the instructions on the Commission's Web site at *http://www.ferc.gov* under the ''e-Filing'' link.

Magalie R. Salas,

Secretary.

[FR Doc. E5–5700 Filed 10–14–05; 8:45 am]

BILLING CODE 6717–01–P

DEPARTMENT OF ENERGY

Federal Energy Regulatory Commission

[Docket No. ER02–1656–000]

California Independent System Operator Corporation; Notice of FERC Staff Attendance

October 11, 2005.

The Federal Energy Regulatory Commission (Commission) hereby gives notice that on October 11–13, 2005, members of its staff will attend stakeholder meetings on the California Independent System Operator Corporation's (CAISO) Market Redesign and Technology Upgrade proposal Technical Specifications Workshop. The meetings will be held at the Lake Natoma Inn, located at 702 Gold Lake Drive, Folsom, CA 95630. An agenda and meeting documents can be found on the CAISO's Web site, *http://www.caiso.com.*

Sponsored by the CAISO, the meetings are open to the public, and staff's attendance is part of the Commission's ongoing outreach efforts. The meeting may discuss matters at issue in Docket No. ER02–1656–000.

For further information, contact Katherine Gensler at *katherine.gensler@ferc.gov;* (916) 294–0275.

Magalie R. Salas,

Secretary.

[FR Doc. E5–5698 Filed 10–14–05; 8:45 am]

BILLING CODE 6717–01–P

DEPARTMENT OF ENERGY

Federal Energy Regulatory Commission

[Docket No. AD05–14–000]

State of the Natural Gas Infrastructure Conference; Supplemental Notice of Public Conference

October 6, 2005.

As announced in a Notice of Technical Conference issued on September 9, 2005, in the above referenced proceeding, a technical conference will be held on October 12, 2005, from approximately 9 a.m. until 1:30 p.m. (EST) (a change in closing time from 3 p.m. listed in the previous notice). The conference will be held in the Commission Meeting Room on the second floor of the offices of the Federal Energy Regulatory Commission, 888 First Street, NE., Washington, DC. All interested persons may attend; there is no fee or registration. Commissioners are expected to participate. Attached is the agenda for the conference.

Transcripts of the conference will be immediately available from Ace Reporting Company (202–347–3700 or 1–800–336–6646) for a fee. They will be available for the public on the Commission's eLibrary system seven calendar days after FERC receives the transcript. Additionally, Capitol Connection offers the opportunity for remote listening and viewing of the conference. It is available for a fee, live over the Internet, by phone, or via satellite. Persons interested in receiving the broadcast, or who need information on making arrangements should contact David Reininger or Julia Morelli at the Capitol Connection (703–993–3100) as soon as possible or visit the Capitol Connection Web site at *http://www.capitolconnection.gmu.edu* and click on ''FERC.''

FERC conferences are accessible under section 508 of the Rehabilitation Act of 1973. For accessibility accommodations please send an e-mail to *accessibility@ferc.gov* or call toll free 866–208–3372 (voice) or 202–208–1659 (TTY), or send a fax to (202) 208–2106 with the required accommodations.

For more information about the conference, please contact John Schnagl at (202) 502–8756 (*john.schnagl@ferc.gov*) or Sarah McKinley at (202) 502–8004 (*sarah.mckinley@ferc.gov*).

Magalie R. Salas,

Secretary.

State of the Natural Gas Infrastructure Conference

Agenda

October 12, 2005

9 a.m.—Opening Remarks

Chairman Joseph T. Kelliher, Federal Energy Regulatory Commission.

9:15 a.m.—Presentation on Short-Term Price Effects of Recent Hurricanes

Stephen Harvey, Robert Flanders and Dean Wight, Office of Market Oversight and Investigations, FERC.

9:40 a.m.—Panel I: Katrina, Rita and the Winter Beyond

What energy infrastructure damage caused by Hurricanes Katrina and Rita still needs repair and what are the prospects for the coming winter?

Hurricanes Katrina and Rita have had significant impacts on the nation's natural gas infrastructure. What lessons were learned from these natural disasters, and how can they be applied to the country as a whole?

Panelists: R. Skip Horvath, President and CEO, Natural Gas Supply Association; David Halphen, Vice President Regulatory Affairs and Administration, Enbridge Offshore Pipelines; Martha Wyrsch, President and CEO, Duke Energy Transmission Corp., on behalf of Interstate Natural Gas Association of America; David Manning, Senior Vice President, Corporate Affairs, Keyspan Energy, on behalf of the American Gas Association; and Patrick DeVille, Director of Marketing, ENSTOR.

10:45 a.m.—Panel II: State of the Pipeline Industry

Given the evolution of the pipeline industry, financial conditions and current contracting practices, can the pipeline industry construct sufficient infrastructure to meet projected demands and the changing sources of supply, *e.g.*, LNG and Rockies gas?

Beginning in 1992, the pipeline industry underwent a major transformation with the passage of Order No. 636. Order No. 637 and the Certificate Policy Statement further spurred the evolution of the industry. Then the 2000–2001 energy crisis was followed by a post-crisis credit crunch. The traditional model of long-term contracts at cost-based rates has been increasingly replaced by short-term contracts at negotiated rates. As a result, the face of the pipeline industry has changed with consolidations and acquisitions by financial investors and diversified companies.

Panelists: Commissioner Donald Mason, Ohio Public Utilities Commission and Chair of the NARUC Gas Committee; James Cleary, President, Western Pipelines, El Paso Corporation; Michael Walsh, Managing Director, AIG Highstar; Scott Parker, President, Natural Gas Pipelines, Kinder Morgan; and Todd Shipman, Director, Energy & Project Finance, Standard & Poor's.

11:50 a.m.—Panel III: Future of the Pipeline Industry

What changes in current regulatory policies might improve the economic and regulatory environment in order to spur interstate pipeline development?

Developments in response to expected increases in natural gas demand will bring natural gas to the U.S. via LNG imports or from unconventional sources of domestic gas. However, there must be an adequate transmission system—interstate pipelines—to deliver this gas to the distribution companies and the end users.

Panelists: Martha Wyrsch, President and CEO, Duke Energy Gas Transmission, on behalf of the Interstate Natural Gas Association of America; Larry Bickle, Managing Director, Haddington Ventures, LLC; James Wilson, Principal, LECG, LLC; Richard Smead, Director, Navigant Consulting Inc.; Alex Strawn, Chairman, Process Gas Consumers Group; Sam Brothwell, Director, Equity Research-Electric & Gas Utilities, Wachovia; and Michael Gildea, Constellation Generation on behalf of Electric Power Supply Association.

12:55 p.m.—Open Forum

1:15 p.m.—Closing Remarks

1:30 p.m.—Adjourn

[FR Doc. E5–5669 Filed 10–14–05; 8:45 am]

BILLING CODE 6717–01–P

DEPARTMENT OF ENERGY

Federal Energy Regulatory Commission

[Docket No. RM98–1–000]

Records Governing Off-the Record Communications; Public Notice

October 11, 2005.

This constitutes notice, in accordance with 18 CFR 385.2201(b), of the receipt of prohibited and exempt off-the-record communications.

Order No. 607 (64 FR 51222, September 22, 1999) requires Commission decisional employees, who make or receive a prohibited or exempt off-the-record communication relevant to the merits of a contested proceeding, to deliver to the Secretary, a copy of the communication, if written, or a summary of the substance of any oral communication.

Prohibited communications are included in a public, non-decisional file associated with, but not a part of, the decisional record of the proceeding. Unless the Commission determines that the prohibited communication and any responses thereto should become a part of the decisional record, the prohibited off-the-record communication will not be considered by the Commission in reaching its decision. Parties to a proceeding may seek the opportunity to respond to any facts or contentions made in a prohibited off-the-record communication, and may request that the Commission place the prohibited communication and responses thereto in the decisional record. The Commission will grant such a request only when it determines that fairness so requires. Any person identified below as having made a prohibited off-the-record communication shall serve the document on all parties listed on the official service list for the applicable proceeding in accordance with Rule 2010, 18 CFR 385.2010.

Exempt off-the-record communications are included in the decisional record of the proceeding, unless the communication was with a cooperating agency as described by 40 CFR 1501.6, made under 18 CFR 385.2201(e)(1)(v).

The following is a list of off-the-record communications recently received in 'the Office of the Secretary. The communications listed are grouped by docket numbers in ascending order. These filings are available for review at the Commission in the Public Reference Room or may be viewed on the Commission's Web site at *http://www.ferc.gov* using the eLibrary (FERRIS) link. Enter the docket number, excluding the last three digits, in the docket number field to access the document. For assistance, please contact FERC, Online Support at *FERCOnlineSupport@ferc.gov* or toll free at (866) 208–3676, or for TTY, contact (202) 502–8659.

EXEMPT

Docket No.	Date received	Presenter or requester
1. CP98–150–000	9–22–05	Hon. Sherwood Boehlert.
2. Project No. 1971–000	10–6–05	Michael J. Bart, P.E.
3. Project No. 2630–004	10–6–05	Linda Lehman.

Magalie R. Salas,
Secretary.
[FR Doc. E5–5694 Filed 10–14–05; 8:45 am]
BILLING CODE 6717–01–P

ENVIRONMENTAL PROTECTION AGENCY

[SFUND–2005–0003, FRL–7984–4]

Agency Information Collection Activities: Proposed Collection; Comment Request; Brownfields Program Revitalization Grantee Reporting, EPA ICR Number 2104.01, OMB Control Number 2050–0192

AGENCY: Environmental Protection Agency (EPA).

ACTION: Notice.

SUMMARY: In compliance with the Paperwork Reduction Act (44 U.S.C. 3501 *et seq.*), this document announces that EPA is planning to submit a continuing Information Collection Request (ICR) to the Office of Management and Budget (OMB). This is a request to renew an existing approved collection. This ICR is scheduled to expire on August 31, 2006. Before submitting the ICR to OMB for review and approval, EPA is soliciting comments on specific aspects of the proposed information collection as described below.

DATES: Comments must be submitted on or before December 16, 2005.

ADDRESSES: Submit your comments, referencing docket ID number SFUND–2005–0003, to EPA online using EDOCKET (our preferred method), by e-mail to *superfund.docket@epa.gov*, or by mail to: EPA Docket Center, Environmental Protection Agency, OSWER Docket, 5202T, 1200 Pennsylvania Ave., NW., Washington, DC 20460.

FOR FURTHER INFORMATION CONTACT: Stacy Swartwood, Office of Solid Waste and Emergency Response (OSWER), Office of Brownfields Cleanup and Redevelopment (OBCR) 5105T, U.S. EPA Headquarters, Ariel Rios Building, 1200 Pennsylvania Avenue, NW., Washington, DC 20460; telephone number: (202) 566–1391; fax number: (202) 566–2757; e-mail address: *swartwood.stacy@epa.gov*.

SUPPLEMENTARY INFORMATION: EPA has established a public docket for this ICR under Docket ID number SFUND–2005–0003, which is available for public viewing at the OSWER Docket in the EPA Docket Center (EPA/DC), EPA West, Room B102, 1301 Constitution Ave., NW., Washington, DC. The EPA Docket Center Public Reading Room is open from 8:30 a.m. to 4:30 p.m., Monday through Friday, excluding legal holidays. The telephone number for the Reading Room is (202) 566–1744, and the telephone number for the OSWER Docket is (202) 566–0276. An electronic version of the public docket is available through EPA Dockets (EDOCKET) at *http://www.epa.gov/edocket*. Use EDOCKET to obtain a copy of the draft collection of information, submit or view public comments, access the index listing of the contents of the public docket, and to access those documents in the public docket that are available electronically. Once in the system, select ''search,'' then key in the docket ID number identified above.

Any comments related to this ICR should be submitted to EPA within 60 days of this notice. EPA's policy is that public comments, whether submitted electronically or in paper, will be made available for public viewing in EDOCKET as EPA receives them and without change, unless the comment contains copyrighted material, CBI, or other information whose public disclosure is restricted by statute. When EPA identifies a comment containing copyrighted material, EPA will provide a reference to that material in the version of the comment that is placed in EDOCKET. The entire printed comment, including the copyrighted material, will be available in the public docket. Although identified as an item in the official docket, information claimed as CBI, or whose disclosure is otherwise restricted by statute, is not included in the official public docket, and will not be available for public viewing in EDOCKET. For further information about the electronic docket, see EPA's **Federal Register** notice describing the electronic docket at 67 FR 38102 (May 31, 2002), or go to *www.epa.gov/edocket.*

Affected entities: Entities potentially affected by this action are states, tribes, local governments, and certain non-governmental organizations that apply for and receive grants from EPA to support the assessment, cleanup and redevelopment of brownfields properties.

Title: Brownfields Program—Grant Reporting Information Collection Request.

Abstract: The Small Business Liability Relief and Brownfields Revitalization Act (Pub. L. 107–118) (''the Brownfields Amendments'') was signed into law on January 11, 2002. The Act amends the Comprehensive Environmental Response, Compensation, and Liability Act (CERCLA), as amended, and authorizes EPA to award grants to States, tribes, local governments, and other eligible entities to assess and clean up brownfields sites. Under the Brownfields Amendments, a brownfields site means real property, the expansion, redevelopment, or reuse of which may be complicated by the presence or potential presence of a hazardous substance, pollutant, or contaminant. For grant funding purposes, EPA uses the term ''brownfields property(ies)'' synonymously with the term ''brownfields sites.'' The Brownfields Amendments authorize EPA to award several types of grants to eligible entities on a competitive basis.

Under subtitle A of the Small Business Liability Relief and Brownfields Revitalization Act, States, tribes, local governments, and other eligible entities can receive assessment grants to inventory, characterize, assess, and conduct planning and community involvement related to brownfields properties; cleanup grants to carry out cleanup activities at brownfields properties; grants to capitalize revolving loan funds and provide subgrants for cleanup activities; and job training grants to support the creation and implementation of environmental job training and placement programs. Under subtitle C of the Small Business Liability Relief and Brownfields Revitalization Act, State and tribes can receive grants to establish and enhance their response programs. The grants support activities necessary to establish or enhance four elements of state and tribal response programs and to meet the public record requirements under the statute. The four elements include: (a) Timely survey and inventory of brownfield sites in the State or in the tribal land; (b) oversight and enforcement authorities or other mechanisms and resources; (c) mechanisms and resources to provide meaningful opportunities for public participation; and (d) mechanisms for approval of a cleanup plan and verification and certification that cleanup is complete. States and tribes that receive funding under subtitle C must establish a public record system during the grant funding period unless an adequate public record system is already established.

Grant recipients have general reporting and record keeping requirements as a condition of their grant that result in burden. A portion of this reporting and record keeping burden is authorized under 40 CFR parts 30 and 31 and identified in the EPA's general grants ICR (OMB Control Number 2030–0020). EPA requires Brownfields program grant recipients to

maintain and report additional information to EPA on the uses and accomplishments associated with the funded brownfields activities. EPA uses several forms to assist grantees in reporting the information and to ensure consistency of the information collected. EPA uses this information to meet Federal stewardship responsibilities to manage and track how program funds are being spent, to evaluate the performance of the Brownfields Cleanup and Redevelopment Program, to meet the Agency's reporting requirements under the Government Performance Results Act, and to report to Congress and other program stakeholders on the status and accomplishments of the grants program.

This ICR addresses the burden imposed on grant recipients that are associated with those reporting and recordkeeping requirements that are specific to grants awarded under the Small Business Liability Relief and Brownfields Revitalization Act. This ICR renewal modifies the annual reporting and recordkeeping burden under the previous ICR. The modified burden reflects an increase in the number of respondents subject to the reporting and recordkeeping requirements, and improvements to the reporting forms based on EPA's experience implementing the grant program. Specifically, subtitle C grant recipients are now subject to the reporting and recordkeeping requirements previously established for subtitle A grant recipients. By using the same form to report information on grant activities, EPA is adopting a streamlined approach that avoids potential confusion among grant recipients and allows the Agency to collect and report program information consistently across all brownfields grants. EPA is also modifying the reporting form to simplify and clarify the reporting requirements, which will improve the accuracy of information reported and minimize the burden to grant recipients.

An agency may not conduct or sponsor, and a person is not required to respond to, a collection of information unless it displays a currently valid OMB control number. The OMB control numbers for EPA's regulations are listed in 40 CFR part 9 and 48 CFR chapter 15.

The EPA would like to solicit comments to:

(i) Evaluate whether the proposed collection of information is necessary for the proper performance of the functions of the Agency, including whether the information will have practical utility;

(ii) Evaluate the accuracy of the Agency's estimate of the burden of the proposed collection of information, including the validity of the methodology and assumptions used;

(iii) Enhance the quality, utility, and clarity of the information to be collected; and

(iv) Minimize the burden of the collection of information on those who are to respond, including through the use of appropriate automated electronic, mechanical, or other technological collection techniques or other forms of information technology, e.g., permitting electronic submission of responses.

Burden Statement: The annual reporting and record keeping burden for this collection of information is estimated to average 5 hours per response for job training grant recipients. The annual reporting and record keeping burden for this collection of information is estimated to average 1.25 hours per response for subtitle A assessment, cleanup, and revolving loan fund grant recipients and subtitle C grant recipients.

Estimated Number of Respondents: 294.

Frequency of Response: Bi-annual for subtitle C grant recipients; quarterly for subtitle A grant recipients.

Estimated Total Annual Hour Burden: 8,683.

Estimated Total Annual Cost: $260,648

Burden means the total time, effort, or financial resources expended by persons to generate, maintain, retain, or disclose or provide information to or for a Federal agency. This includes the time needed to review instructions; develop, acquire, install, and utilize technology and systems for the purposes of collecting, validating, and verifying information, processing and maintaining information, and disclosing and providing information; adjust the existing ways to comply with any previously applicable instructions and requirements; train personnel to be able to respond to a collection of information; search data sources; complete and review the collection of information; and transmit or otherwise disclose the information.

Dated: September 13, 2005.

Linda Garczynski,

Director, Office of Brownfields Cleanup and Redevelopment, Office of Solid Waste and Emergency Response.

[FR Doc. 05–20707 Filed 10–14–05; 8:45 am]

BILLING CODE 6560–50–P

ENVIRONMENTAL PROTECTION AGENCY

[FRL–7984–2]

Science Advisory Board Staff Office; Scientific and Technological Achievement Awards Review Panel (FY2006–FY2009) Request for Nominations

AGENCY: Environmental Protection Agency (EPA).

ACTION: Notice.

SUMMARY: The EPA Science Advisory Board (SAB) Staff Office is requesting nominations for experts to serve on a SAB Scientific and Technological Achievement Awards (STAA) Review Panel (FY2006–FY2009). This Panel reviews peer-reviewed publications from EPA scientists and makes recommendations for awards.

DATES: Nominations should be submitted by November 7, 2005 per instructions below.

FOR FURTHER INFORMATION CONTACT: Any member of the public wishing further information regarding this Notice and Request for Nominations may contact Ms. Vivian Turner, Designated Federal Officer (DFO), SAB Staff Office, by telephone/voice mail at (202) 343–9697; by fax at (202) 233–0643 or via e-mail at *turner.vivian@epa.gov.* General information concerning the EPA Science Advisory Board can be found at the EPA SAB Web site at: *http://www.epa.gov/sab.*

SUPPLEMENTARY INFORMATION: EPA has established the STAA to honor and recognize EPA employees who have made outstanding contributions to science and technology through publication in peer-reviewed journals. EPA's Office of Research and Development (ORD) has requested the SAB to review the nominated scientific publications. Accordingly, the SAB Staff Office, under the auspices of the SAB, is forming a new panel to review the nominated publications. The SAB is chartered under the Federal Advisory Committee Act (FACA), as amended (5 U.S.C. App.). The Panel will comply with the provisions of FACA and SAB procedural policies, including the SAB process for panel formation described in the *Overview of the Panel Formation Process at the Environmental Protection Agency Science Advisory Board,* which can found on the SAB Web site at: *http://www.epa.gov/sab/pdf/ecm02003.pdf.* The Panel will hold a closed meeting to develop award recommendations.

Request for Nominations

The SAB is soliciting nominations of nationally recognized scientists and engineers to serve on the STAA Panel for a term of three years. The Panel will consider nominations in the areas of: Control systems and technology; monitoring and measurement methods (all media); health effects and human risk assessment; ecological effects and ecological risk assessment; ecosystem restoration; chemical fate, transport and exposure assessment; risk management; integrated risk assessment; social sciences; and environmental futures. These areas are described in more detail at the web site identified above.

Process and Deadline for Submitting Nominations

Any interested person or organization may nominate individuals qualified in the areas of expertise described above to serve on the SAB STAA Review Panel. Nominations should be submitted in electronic format through the SAB Nomination Form which can be accessed through a link on the blue navigational bar on the SAB Web site at: *http://www.epa.gov/sab/panels/paneltopics.html.* To be considered, all nominations must include the information requested on that form.

Anyone who is unable to submit nominations using the electronic form or questions concerning any aspect of the nomination process may contact the DFO, as indicated above in this notice. Nominations should be submitted no later than November 7, 2005. Any questions concerning either this process or any other aspects of this notice should be directed to the DFO. The process for forming a SAB panel is described in the *Overview of the Panel Formation Process at the Environmental Protection Agency, Science Advisory Board* (EPA–SAB–EC–COM–02–010), which may be accessed on the SAB Web site at: *http://www.epa.gov/sab/pdf/ec02010.pdf.*

Nominees identified by respondents to this **Federal Register** notice (termed the ''Widecast'') will be evaluated on the basis of scientific expertise and experience in the aforementioned descriptions, as well as prior national committee experience. Appropriately profiled candidates will be identified and placed on a ''Short List'' for further consideration. The ''Short List'' will be posted on the SAB Web site at *http://www.epa.gov/sab* and will include the nominee's name and biosketch. Public comments on the ''Short List'' will be accepted during a public comment period. The public will be requested to provide information, analysis or other documentation on nominees that the SAB Staff Office should consider in evaluating candidates for the Panel.

The STAA panelists will be selected from the ''Short List.'' For the SAB, a balanced panel is characterized by inclusion of candidates who possess the necessary domains of knowledge, the relevant scientific perspectives (which, among other factors, can be influenced by work history and affiliation), and the collective breadth of expertise and experience to adequately address the charge. Public responses to the ''Short List'' candidates will be considered in the selection of the panel, along with information provided by candidates and information gathered by SAB Staff independently on the background of each candidate (e.g., financial disclosure information and computer searches to evaluate a nominee's prior involvement with the topic under review). Specific criteria to be used in evaluation of an individual Panel member include: (a) Scientific and/or technical expertise, knowledge, and experience (primary factors); (b) absence of financial conflicts of interest; (c) scientific credibility and impartiality; (d) availability and willingness to serve; and (e) ability to work constructively and effectively in committees.

Potential panelists will be required to complete and submit the ''Confidential Financial Disclosure Form for Special Government Employees Serving on Federal Advisory Committees at the U.S. Environmental Protection Agency'' (EPA Form 3110–48). This confidential form allows Government officials to determine whether there is a statutory conflict between that person's public responsibilities (which includes membership on an EPA Federal advisory committee) and private interests and activities, or the appearance of a lack of impartiality, as defined by Federal regulation. The form may be viewed and downloaded from the following URL address: *http://www.epa.gov/sab/pdf/epaform3110–48.pdf.*

Dated: October 7, 2005.

Anthony F. Maciorowski,

Associate Director for Science, EPA Science Advisory Board Staff Office.

[FR Doc. 05–20705 Filed 10–14–05; 8:45 am]

BILLING CODE 6560–50–P

ENVIRONMENTAL PROTECTION AGENCY

[FRL–7984–3]

Notice of Meeting of the EPA's Children's Health Protection Advisory Committee (CHPAC)

AGENCY: Environmental Protection Agency (EPA).

ACTION: Notice of meeting.

SUMMARY: Pursuant to the provisions of the Federal Advisory Committee Act, Public Law 92–463, notice is hereby given that the next meeting of the Children's Health Protection Advisory Committee (CHPAC) will be held October 25 and 26, 2005 at the Hotel Washington, Washington, DC. The CHPAC was created to advise the Environmental Protection Agency on science, regulations, and other issues relating to children's environmental health.

DATES: The Science and Regulatory Work Groups will meet Monday October 24, 2005. Plenary sessions will take place Tuesday October 25 and Wednesday October 26, 2005.

ADDRESSES: Hotel Washington, 515 15th Street, NW., Washington, DC.

FOR FURTHER INFORMATION CONTACT: Contact Joanne Rodman, Office of Children's Health Protection, USEPA, MC 1107A, 1200 Pennsylvania Avenue, NW., Washington, DC 20460, (202) 564–2188, *rodman.joanne@epa.gov.*

SUPPLEMENTARY INFORMATION: The meetings of the CHPAC are open to the public. The Science and Regulatory Work Groups will meet Monday October 24, 2005 9 a.m. to 5 p.m. The plenary CHPAC will meet on Tuesday October 25, 2005 9 a.m. to 5:30 p.m., with a public comment period at 5 p.m., and on Wednesday October 26, 2005 from 9 a.m. to 11:45 a.m.

The plenary session will open with introductions and a review of the agenda and objectives for the meeting. Agenda items include an update on EPA's Hurricane Katrina and Rita activities, and a discussion of EPA's implementation of the supplemental cancer guidelines. Other potential agenda items include a presentation on community based perspectives on children's environmental health.

Dated: October 11, 2005.

Joanne K. Rodman,

Designated Federal Official.

Children's Health Protection Advisory Committee; Hotel Washington, 515 15th Street, NW., Washington, DC 20004–1099; July 12–14, 2005; Draft Agenda

Monday October 24, 2005

Task Group Meetings

Wednesday, October 25, 2005

8:45 Welcome, Introductions, Review Meeting Agenda
9 Highlights of Recent OCHP Activities
9:45 Presentation and Discussion: Community Based Perspectives on Children's Environmental Health
10:15 Update: VCCEP Evaluation
10:30 Break
10:45 Science Workgroup Status Report
11:15 Human Subjects Comment Letter
12:30 Lunch
1:30 Presentation TBA
3 Public Comment
3:15 Break
3:30 Regulatory Workgroup Status Report
4 Discussion: Regulatory Workgroup Comment Letters
6 Adjourn

Thursday, October 26, 2005

9 Discussion of Day One
9:15 Presentation: Implementation of the Supplemental Cancer Guidelines
10:15 Discuss and Agree on Recommendations
12:15 Wrap Up/Next Steps

[FR Doc. 05–20706 Filed 10–14–05; 8:45 am]

BILLING CODE 6560–50–P

ENVIRONMENTAL PROTECTION AGENCY

[FRL–7984–1]

Science Advisory Board Staff Office; Notification of an Upcoming Science Advisory Board Meeting (Teleconference)

AGENCY: Environmental Protection Agency (EPA).

ACTION: Notice.

SUMMARY: The EPA Science Advisory Board (SAB) Staff Office announces a public teleconference meeting of the chartered SAB to discuss a draft SAB report.

DATES: November 7, 2005, 1–3 p.m. (Eastern Time).

ADDRESSES: The meeting will take place via telephone only.

FOR FURTHER INFORMATION CONTACT: Members of the public who wish to obtain the call-in number and access code to participate in the telephone conference or who wish to obtain further information regarding this teleconference meeting may contact Mr. Thomas O. Miller, Designated Federal Officer (DFO), Science Advisory Board Staff Office (1400F), U.S. EPA, 1200 Pennsylvania Avenue, NW., Washington, DC 20460; or via telephone/voice mail at (202) 343–9982 or via e-mail at *miller.tom@epa.gov.* General information about the SAB, as well as any updates concerning the meeting announced in this notice, may be found on the SAB Web site at: *http://www.epa.gov/sab.*

SUPPLEMENTARY INFORMATION: The purpose of this SAB telephone conference meeting is to conduct a final public review and discussion of the draft SAB report Review of EPA's Draft Framework for Inorganic Metals Risk Assessment. The focus of the meeting is to consider whether: (i) The original charge questions to the SAB review panel have been adequately addressed in the draft report, (ii) the draft report is clear and logical; and (iii) the conclusions drawn, or recommendations made in the draft report, are supported by the body of the report.

Background: Background on the EPA metals Risk Assessment was provided in a **Federal Register** Notice published on July 29, 2004 (69 FR 45314–45315). EPA has been undertaking an effort to develop cross-Agency guidance for assessing the human health and ecological hazards and risks of metals and metal compounds. EPA developed the draft guidance document entitled, ''Framework for Inorganic Metals Risk Assessment,'' to supplement previous EPA guidance for use in site-specific risk assessments, criteria derivation, and other similar Agency activities related to metals. The guidance is organized around the risk assessment paradigm. The document provides a conceptual model that highlights areas where consideration of metal-specific information is necessary and advantageous when conducting risk assessments. It outlines recommendations for conducting risk assessment for metals and metal compounds based on the unique attributes of these compounds. The guidance document also discusses metal-specific issues related to environmental chemistry, exposure, bioaccumulation and bioavailability, ecological effects, and human health effects. In addition, the guidance discusses research underway, planned, and needed to reduce uncertainty in metals risk assessment.

Availability of Meeting Materials: A roster of participating SAB members and the meeting agenda will be posted on the SAB Web site prior to the meeting. The draft report that is the subject of this meeting is available on the SAB Web site at: *http://www.epa.gov/sab.*

Procedures for Providing Public Comment: The SAB Staff Office accepts written public comments of any length, and accommodates oral public comments whenever possible. The SAB Staff Office expects that public statements presented at SAB meetings will not be repetitive of previously submitted oral or written statements. Oral Comments: In general, each individual or group requesting an oral presentation at a teleconference meeting will usually be limited to no more than three minutes per speaker and no more than fifteen minutes total for all speakers. Interested parties should contact the DFO noted above in writing via e-mail at least one week prior to the meeting in order to be placed on the public speaker list for the meeting. Speakers should provide an electronic copy of their comments to the DFO for distribution to interested parties and participants in the meeting. Written Comments: Although written comments are accepted until the date of the meeting (unless otherwise stated), written comments should be received in the SAB Staff Office at least one week prior to the meeting date so that the comments may be made available to the committee for their consideration. Comments should be supplied to the DFO at the address/contact information above in the following formats: one hard copy with original signature, and one electronic copy via e-mail (acceptable file format: Adobe Acrobat, WordPerfect, Word, or Rich Text files (in IBM–PC/Windows 98/2000/XP format).

Accessibility: For information on access or services for individuals with disabilities, please contact Mr. Thomas O. Miller at (202) 343–9982 or *miller.tom@epa.gov.* To request accommodation of a disability, please contact Mr. Miller, preferably at least 10 days prior to the meeting, to give EPA as much time as possible to process your request.

Dated: October 7, 2005.

Anthony F. Maciorowski,

Associate Director for Science, EPA Science Advisory Board Staff Office.

[FR Doc. 05–20704 Filed 10–14–05; 8:45 am]

BILLING CODE 6560–50–P

FEDERAL RESERVE SYSTEM

Agency Information Collection Activities: Announcement of Board Approval Under Delegated Authority and Submission to OMB

SUMMARY:

Background

Notice is hereby given of the final approval of a proposed information collection by the Board of Governors of the Federal Reserve System (Board) under OMB delegated authority, as per 5 CFR 1320.16 (OMB Regulations on Controlling Paperwork Burdens on the Public). Board-approved collections of information are incorporated into the official OMB inventory of currently approved collections of information. Copies of the OMB 83-Is and supporting statements and approved collection of information instrument(s) are placed into OMB's public docket files. The Federal Reserve may not conduct or sponsor, and the respondent is not required to respond to, an information collection that has been extended, revised, or implemented on or after October 1, 1995, unless it displays a currently valid OMB control number.

FOR FURTHER INFORMATION CONTACT: Federal Reserve Board Clearance Officer—Michelle Long—Division of Research and Statistics, Board of Governors of the Federal Reserve System, Washington, DC 20551 (202–452–3829); OMB Desk Officer—Mark Menchik—Office of Information and Regulatory Affairs, Office of Management and Budget, New Executive Office Building, Room 10235, Washington, DC 20503, or e-mail to *mmenchik@omb.eop.gov*.

Final approval under OMB delegated authority to conduct the following survey:

Report title: Check 21 Act Survey.

Agency form number: FR 3080.

OMB control number: 7100–0279.

Effective date: October 31, 2005.

Frequency: one-time.

Reporters: Depository institutions.

Annual reporting hours: 15,000 hours.

Estimated average hours per response: 10 hours.

Number of respondents: 1,500.

General description of report: This information collection is voluntary (12 U.S.C. 5015) and may be accorded confidential treatment under the Freedom of Information Act (5 U.S.C. 552 (b)(4)).

Abstract: Section 16 of the Check Clearing for the 21st Century Act (Check 21 Act) requires the Federal Reserve to study the implementation of the law and its effect on various aspects of check processing, including funds availability, and to report the results of the study to the Congress by April 28, 2007.[1] Specifically, the Congress directed the Federal Reserve to study and report to them on:

(1) The percentage of total checks cleared in which the paper check is not returned to the paying bank;

(2) The extent to which banks make funds available to consumers for local and nonlocal checks prior to the expiration of maximum hold periods;

(3) The length of time within which depositary banks learn of the nonpayment of local and nonlocal checks;

(4) The increase or decrease in check-related losses over the study period; and

(5) The appropriateness of the time periods and amount limits applicable under sections 603 and 604 of the Expedited Funds Availability Act (EFAA), as in effect on the date of enactment of the Check 21 Act.

To fully address the issues raised by the Congress, the Federal Reserve proposed to conduct a survey to ensure the accurate characterization of the nation's evolving check processing system. The survey would gather data from a nationally representative sample of depository institutions, including commercial banks, savings institutions, and credit unions.

Further, the availability for withdrawal of funds deposited by check is governed by the Federal Reserve's Regulation CC, which implements the EFAA. The EFAA and Regulation CC set maximum permissible hold periods for checks deposited into transaction accounts at depository institutions. The EFAA directs the Federal Reserve to reduce the statutory funds availability schedules as the check clearing system improves, while also ensuring that the reduced schedules provide depositary banks a reasonable opportunity to learn of the nonpayment of most checks in each category (such as ''nonlocal'' checks and ''local'' checks). The results of the proposed survey would be used to determine whether reducing the hold periods in Regulation CC is warranted.

Current Actions: On May 10, 2005, the Federal Reserve issued for public comment a proposal to conduct the Check 21 Act survey (70 FR 24581). The comment period ended on July 11, 2005. The Federal Reserve received seven comment letters from: three trade associations, two banks, one corporate credit union, and one credit union.

[1] The Check 21 Act also directs the Federal Reserve to include in its report to the Congress any recommendations for legislative action.

Summary of Comments

All commenters agreed that a survey is appropriate to obtain the information necessary to address the Check 21 Act requirements. Notwithstanding their support of the survey, nearly all asserted that the adoption of Check 21 is taking place relatively slowly; thus, it is too early to study its benefits to the check collection system. Two commenters expressed concern about the amount of detail requested from survey respondents. In addition, two commenters stated that the survey, in its proposed form, did not adequately serve its stated purpose. One commenter expressed concern regarding whether responses to the survey would be kept confidential. Two commenters recommended that the Federal Reserve provide adequate notice to selected survey participants and extend the submission deadline. Commenters also requested an optional narrative section to enable respondents to comment on various issues and clarification on particular terms in the survey.

Reporting Burden

All commenters addressed the estimated burden to depository institutions for completing the survey and stated that the actual burden to depository institutions would be greater than the Federal Reserve had estimated because institutions in many cases do not currently maintain data in the form and categories contemplated by the survey. (For example, some banks' systems do not distinguish between original and substitute checks.) Consequently, depository institutions may need to make programming changes or gather the data manually, either of which would be costly and time consuming. The Federal Reserve recognizes that the burden for each survey respondent will vary based on an institution's size and recordkeeping practices. Given that the survey has been substantially shortened and simplified in response to the comments, the Federal Reserve believes that the estimate of an average of ten hours per respondent is reasonable, especially given that respondents have the option to respond by providing an estimate or by indicating ''don't know.''

As previously noted, many commenters cautioned that it is premature to gauge the effects of the Check 21 Act. Based on Reserve Bank experiences and anecdotal industry information, it appears that, to date, relatively few depository institutions have taken advantage of the new check processing methods made possible by the Check 21 Act and that check

collection and return times have not materially improved since the Act became effective. Accordingly, and in light of commenters' statements that it would be quite burdensome to respond to the survey as initially proposed, the survey has been shortened and simplified, where possible:

- Four questions (out of seven) were deleted from the check losses section of the survey (Section 2);
- Four questions (out of five) were deleted from the funds availability section of the survey (Section 4); and
- Two questions (out of three) were deleted from the returned items section of the survey (Section 5).[2]

Survey Methodology

Three commenters raised questions about the survey methodology, postulating that the proposed survey would produce unrepresentative results because participation is voluntary and depository institutions have the option of providing estimates. Two commenters recommended that the survey focus on published funds availability policies (i.e., instances where depository institutions' published policies provide for faster funds availability than is required by Regulation CC), believing that such focus would provide the Federal Reserve with enough information to determine whether the maximum hold periods in Regulation CC should be shortened. Additionally, two commenters encouraged the Federal Reserve to augment the survey by using data collected by industry organizations and the Federal Reserve Banks.

The Federal Reserve believes that the survey methodology is sound. The survey panel would be a stratified random sample of approximately 3,000 depository institutions, including commercial banks, savings institutions, and credit unions. While an earlier survey on check losses conducted by the Federal Reserve in 1996 achieved only a 30 percent response rate, the response rates for recent voluntary surveys of check payments conducted by the Federal Reserve (with outside consultants) have been about 50 percent with nearly all the largest 100 panel members responding. The Federal Reserve believes that modifications to the current survey, such as simplifying the survey, will improve the response rate and that the survey is likely to achieve a higher response rate than the 1996 survey. If the response rate in the more recent surveys is achieved, survey items such as the number and value of checks deposited at banks and the number and value of checks paid by banks can be estimated with a sampling standard error of about 1 percent. Sampling standard errors for other items may be higher depending on the variability of the item across banks, and the item response rate. While published availability schedules may be easier for depository institutions to report, actual funds availability practices for check deposits to consumer accounts that do not qualify for exception holds under Regulation CC will provide better information for the Federal Reserve in considering whether to shorten the maximum hold periods. Assuming an improved response rate from that of the 1996 survey, that the item response rates are high, and that the probability of responding is uncorrelated with the variables being estimated (e.g. fraud experience), the study will provide statistically valid national estimates that are not available from existing industry or trade sources.

Confidentiality

One commenter raised a concern over the confidentiality, availability, and accessibility of some of the requested information, and suggested that lack of assurance of confidentiality would diminish the response rate for voluntary compliance. The commenter states that much of the information sought in the proposed survey is considered proprietary and confidential by respondents, particularly information regarding check losses, internal systems tracking mechanisms, and the results determined by these mechanisms. While the commenter indicates it has protected many of its internal processes by patenting them or obtaining trademark protection, the commenter raises concerns whether other trade secret and high level security information would be subject to protection.

First, the information collected in the survey will be treated and maintained as confidential by the Board's Division of Reserve Bank Operations and Payment Systems (RBOPS). RBOPS will not share this information, or otherwise make this information available to, any other Federal Reserve staff or to any third parties. Second, the information that is collected will be aggregated before it is submitted to the Congress. No confidential information will be disclosed, and care will be taken to ensure that individual respondents are not identified and that their identities cannot be deduced from any information that is disclosed. Third, the Federal Reserve regards the information requested on the form as confidential and generally subject to protection from disclosure under exemption 4 of the Freedom of Information Act (FOIA), 5 U.S.C. 552(b)(4). Exemption 4 exempts from disclosure ''trade secrets and commercial or financial information obtained from a person and privileged and confidential.'' In the event of a FOIA request for the information, the Federal Reserve would claim exemption 4 as a basis for withholding and decline to produce it. If, for any reason, the Federal Reserve believes that particular information cannot be withheld from disclosure under exemption 4, the Federal Reserve will inform the respondent of its views and give the respondent an opportunity to object and to provide additional information supporting withholding, as required under section 261.16 of the Board's ''Rules Regarding the Availability of Information,'' 12 CFR 261.16.

Adequate Notice About the Final Survey and Extension of the Submission Date

Two commenters recommended that the Federal Reserve provide notice of the survey to selected participants no later than October 1, 2005, and that the Federal Reserve extend the submission deadline from May 2006 to July 2006 to afford sufficient time for depository institutions to implement processes and system changes to facilitate the data collection. The Federal Reserve is publishing the final survey in October and plans to contact survey participants directly in November 2005. Based upon prior data collections of this size and complexity, the Federal Reserve believes that the submission deadline provides ample time for depository institutions to respond to the survey. The Federal Reserve will use the time between May 2006 and April 2007 to tabulate and analyze responses to the survey, to draft the required report to the Congress, and to assess whether any legislative recommendations are desirable.

Optional Narrative Section and Other Clarifications

A few commenters suggested that an optional narrative section be included in the survey to enable respondents to comment on various issues, including funds availability, consumer protection, and specific types of check losses, such as those resulting from fraudulent cashier's checks and teller's checks. Inclusion of such a narrative section would be infeasible given the survey's sample size and scope.

[2] Section 1 of the survey requests basic information such as institution name, address, and phone number. Section 3, which contains two questions, requests information regarding the overall volume and value of checks that banks handle. These sections remain largely unchanged.

Five commenters suggested that certain language be clarified, and several of these suggestions have been incorporated into the survey document. For example, the survey now more clearly indicates that checks converted to ACH transactions should be excluded, clarifies which types of losses should be included as check losses, and explains the difference between electronic check presentment and paper check presentment. Additionally, the survey document more clearly indicates that a respondent should check an estimate box if an answer is an estimate, or enter ''DK'' (don't know) if the respondent has volume of the type being measured, but is unable to report at least an estimate.

Board of Governors of the Federal Reserve System, October 11, 2005.

Jennifer J. Johnson,

Secretary of the Board.

[FR Doc. 05–20663 Filed 10–14–05; 8:45 am]

BILLING CODE 6210–01–P

FEDERAL RESERVE SYSTEM

Formations of, Acquisitions by, and Mergers of Bank Holding Companies

The companies listed in this notice have applied to the Board for approval, pursuant to the Bank Holding Company Act of 1956 (12 U.S.C. 1841 *et seq.*) (BHC Act), Regulation Y (12 CFR Part 225), and all other applicable statutes and regulations to become a bank holding company and/or to acquire the assets or the ownership of, control of, or the power to vote shares of a bank or bank holding company and all of the banks and nonbanking companies owned by the bank holding company, including the companies listed below.

The applications listed below, as well as other related filings required by the Board, are available for immediate inspection at the Federal Reserve Bank indicated. The application also will be available for inspection at the offices of the Board of Governors. Interested persons may express their views in writing on the standards enumerated in the BHC Act (12 U.S.C. 1842(c)). If the proposal also involves the acquisition of a nonbanking company, the review also includes whether the acquisition of the nonbanking company complies with the standards in section 4 of the BHC Act (12 U.S.C. 1843). Unless otherwise noted, nonbanking activities will be conducted throughout the United States. Additional information on all bank holding companies may be obtained from the National Information Center website at *www.ffiec.gov/nic/*.

Unless otherwise noted, comments regarding each of these applications must be received at the Reserve Bank indicated or the offices of the Board of Governors not later than November 10, 2005.

A. Federal Reserve Bank of Atlanta (Andre Anderson, Vice President) 1000 Peachtree Street, N.E., Atlanta, Georgia 30303:

1. Flint Community Bancshares, Inc., Albany, Georgia; to become a bank holding company by acquiring 100 percent of the voting shares of Flint Community Bank, Albany, Georgia (in organization).

2. SBT Bancorp, Inc., Clarkesville, Georgia; to become a bank holding company by acquiring 100 percent of the voting shares of Southern Bank & Trust, Clarkesville, Georgia (in organization).

B. Federal Reserve Bank of Minneapolis (Jacqueline G. King, Community Affairs Officer) 90 Hennepin Avenue, Minneapolis, Minnesota 55480-0291:

1. Citizens Development Company, Billings, Montana; to merge with Midwest Bancorporation, Billings, Montana, and thereby indirectly acquire Clarke County State Bank, Osceola, Iowa; Farmers and Merchants State Bank, Iroquois, South Dakota; and Farmers State Bank, Stickney, South Dakota.

2. Citizens Development Company, Billings, Montana; to merge with United Bancorporation, Billings, Montana, and thereby indirectly acquire Lincoln County Bank, Merrill, Wisconsin; United Bank, Osseo, Wisconsin; Bank of Poynette, Poynette, Wisconsin; and Cambridge State Bank, Cambridge, Wisconsin.

C. Federal Reserve Bank of Kansas City (Donna J. Ward, Assistant Vice President) 925 Grand Avenue, Kansas City, Missouri 64198-0001:

1. Nebraska Bankshares, Inc., Farnam, Nebraska; to acquire up to 100 percent of the voting shares of First State Bank (also known as Holbrook Exchange Company, Holbrook, Nebraska (in organization).

Board of Governors of the Federal Reserve System, October 12, 2005.

Jennifer J. Johnson,

Secretary of the Board.

[FR Doc. E5–5691 Filed 10–14–05; 8:45 am]

BILLING CODE 6210–01–S

FEDERAL RESERVE SYSTEM

[Docket No. OP–1229]

Federal Reserve Bank Services Private Sector Adjustment Factor

AGENCY: Board of Governors of the Federal Reserve System.

ACTION: Notice.

SUMMARY: The Board has approved modifications to the method for calculating the private sector adjustment factor, which imputes the costs that would have been incurred and profits that would have been earned, including the return on equity capital, had the Federal Reserve Banks' priced services been provided by a private sector business. When setting prices in 2006, the Board will use only the capital asset pricing model to determine the target return on equity capital. Rather than continuing the long-standing process of identifying a peer group to calibrate the target return on equity capital, the return on equity capital will be based on the rate of return for the equity market as a whole. The Board's method for setting the level of equity capital imputed to priced services would continue to be based on the Federal Deposit Insurance Corporation guidelines for a well-capitalized depository institution for insurance premium purposes. In addition, the Board will continue using the financial data from the top fifty bank holding companies by deposit balance to determine the priced-services effective tax rate each year.

DATES: This revised method will be used to calculate the targeted return on equity capital beginning with the 2006 price setting.

FOR FURTHER INFORMATION CONTACT: Gregory L. Evans, Assistant Director (202/452–3945), Brenda L. Richards, Manager (202/452–2753), or Jonathan Mueller, Financial Analyst (202/530–6291); Division of Reserve Bank Operations and Payment Systems. Telecommunications Device for the Deaf (TDD) users may contact 202/263–4869.

SUPPLEMENTARY INFORMATION:

I. Background

The Monetary Control Act (MCA) requires that the Board establish fees for ''priced services'' provided to depository institutions to recover, over the long run, all direct and indirect costs actually incurred as well as imputed costs that would have been incurred, including financing costs, taxes, and certain other expenses, and the return on equity (profit) that would have been earned, if a private business

firm provided the services. The imputed costs and imputed profit are collectively referred to as the private sector adjustment factor (PSAF).

The method for calculating the PSAF includes determining the book value of Federal Reserve assets and liabilities to be used in providing priced services during the coming year. The Board's method involves developing an estimated Federal Reserve priced-services pro forma balance sheet using actual priced-services assets and liabilities. The remaining elements on the balance sheet, such as equity, are imputed as if these services were provided by a private-sector business. Equity is imputed at a level necessary to satisfy the Federal Deposit Insurance Corporation (FDIC) requirement for a well-capitalized depository institution.[1]

A target return on equity capital (ROE) is estimated and applied to the dollar amount of equity capital on the pro forma balance sheet to determine the priced-services cost of equity. For the past few years, the ROE has been calculated by averaging the results of three analytical models: The comparable accounting earnings (CAE) model, the discounted cash flow (DCF) model, and the capital asset pricing model (CAPM). The top fifty bank holding companies (BHCs) based on deposit balances serve as the peer group for Federal Reserve priced services and the peer group's financial data are used to estimate the target ROE.

The Board uses historical BHC accounting information to compute a target ROE in the CAE model. The ROE for an individual BHC in the peer group is calculated as the ratio of the firm's net income to its book value of equity and is averaged with the ROEs of the peer group BHCs to determine the total peer group ROE. The CAE ROE is calculated as the average of the peer group ROEs over the last five years. The DCF model takes a forward-looking approach to estimating ROE. It assumes that a firm's stock price is equal to the discounted present value of all expected future dividends. The CAPM captures the risk-return relationship that rational investors require in efficient markets. The underlying theory of the model assumes that investors demand a premium for bearing risk; that is, the higher the risk of the entity, the higher its expected return must be to attract investors.

The PSAF also includes imputed income taxes by using a targeted pretax ROE.[2] The PSAF tax rate is the median of the rates paid by the fifty BHCs in the peer group over the past five years. Finally, the PSAF includes an estimated share of the Board of Governors' expenses incurred to oversee Reserve Bank priced services, imputed sales tax, and an imputed assessment for FDIC insurance.

The methodology underlying the PSAF is reviewed periodically to ensure that it is appropriate and relevant in light of Reserve Bank priced-services activities, accounting standards, finance theory, and regulatory and business practices.[3] In addition, the Board seeks to balance the cost, complexity, and accuracy of the PSAF methodology in implementing theoretically sound approaches.

In May, the Board requested comments on potential modifications to the following elements of the PSAF ROE methodology (70 FR 29512, May 23, 2005).[4]

- Imputed ROE models: The Board requested comment on calculating a target ROE based only on the CAPM, rather than the current three-model method.
- CAPM parameters: The Board requested comment on the appropriate method for establishing the risk-free rate and the measure of market risk, commonly referred to as the beta, including the peer group, estimation period, weighting approach, and the assumption that the priced-services beta is equal to 1.0.
- Income tax rate calculation: Although the Board did not specifically request comment on the tax rate calculation, if the Board were to assume a beta equal to 1.0 for priced services and a peer group is no longer needed, the Board would need to identify a method to determine a comparable tax rate for the PSAF.
- Broader issues and future industry and regulatory changes: The Board requested comment on whether the ROE target should be set every year or over a multi-year period and whether the ROE methodology should be adjusted to take business changes into consideration. Given that the competition to the Reserve Banks' priced services will increasingly be market utilities rather than correspondent banks as the check service becomes more electronic, the Board requested comment on the implications that this trend would have on determining the priced-services peer group. The Board also requested comment on the potential effect on the PSAF of proposals developed by the Basel Committee on Banking Supervision (Basel II) to improve capital adequacy regulations.

II. Summary and Analysis of Comments

The Board received ten responses to its request for comment. Six responses were from banks or BHCs, and one response each was received from a savings and loan, a payments processing company, a banking association, and a Reserve Bank. Overall, the comments were mixed regarding the theory, use, and components of the current and considered PSAF ROE methodology.

A. Imputed Return on Equity Models

The target ROE for Reserve Bank priced-services activities is established at the organization level rather than by developing an ROE for each service or Reserve Bank. Conceptually, the ROE is developed with a shareholder's perspective in mind and considers whether shareholders are adequately compensated in the form of average equity returns given the overall risk of the business activities. The current three-economic-model approach incorporates different inputs and melds different outlooks when determining a target ROE. The source of data for the CAE model is peer-group historical accounting information and the peer group CAE ROE is averaged over five years to avoid any large fluctuations. The DCF approach uses BHC peer group stock prices, along with analyst projections of future dividends and long-term dividend growth rates, to estimate ROE. The CAPM uses peer group and market equity returns to estimate a risk premium, which is added to the return on a risk-free asset to estimate ROE.

Because the CAPM is widely accepted and used more in practice than the CAE and DCF methods, the Board requested comment on replacing the current method of averaging the results of three

[1] Equity is imputed based on the FDIC definition of a ''well-capitalized'' institution for insurance premium purposes. The FDIC requirements for a well-capitalized depository institution are (1) a ratio of total capital to risk-weighted assets of 10 percent or greater; and (2) a ratio of Tier 1 capital to risk-weighted assets of 6 percent or greater; and (3) a leverage ratio of Tier 1 capital to total assets of 5 percent or greater. The Federal Reserve priced-services balance sheet total capital has no components of Tier 1 or total capital other than equity; therefore, requirements 1 and 2 are essentially the same measurement.

[2] Rather than estimate a separate tax expense, the Board targets a pretax ROE that would provide sufficient income to fulfill its income tax obligations. To the extent that the actual performance results are greater or less than the targeted ROE, income taxes are adjusted accordingly.

[3] The previous review of the PSAF was completed in 2001 and changes were implemented for the 2002 PSAF (66 FR 52617, October 16, 2001).

[4] During the development of this proposal, the Federal Reserve worked with a consulting firm specializing in capital allocation and risk management and four finance professors from U.S. academic institutions to obtain information about current private-sector practices.

models with a simple CAPM-only method.[5] Specifically, the CAE model has continued to wane in use and the effectiveness of the DCF model has been questioned based on research findings that analysts' dividend projections can be biased.

Generally, commenters supported using the CAPM-only method to calculate a target ROE because it is simple and theoretically the best model. Some suggested keeping the current three-model approach or using a modified version of the current approach. None of the comments supported the DCF model; however, three commenters noted that the CAE model, or other accounting-based information, could be a useful way to validate the results and assumptions of CAPM. One commenter opposed using only the CAPM because it would create volatility in Federal Reserve pricing.

Although ROE targets taken directly from results produced by a CAPM-only approach are more volatile than those generated under the current methodology primarily due to the CAPM's sensitivity to the short-term risk-free rate, the Board believes that the degree of volatility is representative of ROEs that would be expected of a private-sector service provider. In addition, the imputed net income on clearing balances (NICB) for priced services is also sensitive to short-term interest rate changes because the spread between the earnings rate and the cost of clearing balances increases as short-term rates increase.[6] In a changing interest rate environment these two factors move in directions that offset each other. Both the target ROE and NICB would increase and decrease together as interest rates rise and fall, respectively. Thus, the effect on net income and service prices of these two factors combined becomes more stable than under the current ROE calculation methodology.[7]

Several commenters offered alternative models or adjustments that could be considered when calculating a target ROE. Three commenters suggested that the Board could use an Arbitrage Pricing Theory (APT) model, other multi-factor models, or adjust the CAPM beta for differences in leverage between the peer group and Federal Reserve priced services. Although not discussed in the request for comment, the Board considered whether APT and other multi-factors models, along with making adjustments for leverage, to estimate a target ROE would lead to a materially different ROE over the ''simple'' CAPM ROE.[8] In multi-factor models and models adjusting for differences in leverage, subjective judgments and assumptions must be made about the factors to include and the future behavior of the factors. Incorporating the additional factors and making subjective and complex adjustments did not produce materially different ROEs from those resulting from using a single factor CAPM.

Overall, the Board believes that CAPM is a methodology widely used in financial industry practice. The Board recognizes that many firms use financial models, such as CAPM, as a starting point when estimating a target ROE and make subjective adjustments based on current or expected trends affecting the firm's profitability. Because the Board strives to have a PSAF methodology that is consistent with private-sector practice and that can be replicated by the public, the CAPM-only approach is reasonable because it is a well-known, generally accepted, and theoretically sound model that is simple and transparent compared to other approaches. The Board, therefore, will use the CAPM-only approach to estimate a target ROE.

B. CAPM Parameters

In its request for comment, the Board considered whether the current CAPM methodology should be modified to reflect better the goals of the MCA, and current professional and academic practice. CAPM's basic principle is that the required rate of return on a firm's equity is equal to the return on a risk-free asset plus a risk premium. The risk premium is a measurement of the expected excess return on a market portfolio of equities over a risk-free rate (the expected market risk premium) and the correlation of the firm's returns to the market returns (beta). These principles are captured in the following formula:

[5] R.F. Bruner, K.M. Eades, R.S. Harris, and R.C. Higgins, 1998 ''Best Practices in Estimating Cost of Capital: Survey and Synthesis,'' Financial Practice and Education, and J.R. Graham, and C.R. Harvey, 2001 ''The Theory and Practice of Corporate Finance: Evidence from the Field,'' Journal of Financial Economics, find that CAPM is the dominant model for estimating cost of equity. In addition, most textbook treatments of equity cost of capital calculations are based on the CAPM model (for example see *http://www.Damodaran.com*).

[6] The earnings credit rate is 80 percent of the base rate, which is the coupon equivalent yield of the 13-week rolling average of the three-month Treasury bill. The investment rate is the base rate plus a constant spread, which is determined by a portfolio that is similar to one held by a BHC.

[7] The NICB calculation assumes that Reserve Banks invest clearing balances net of imputed reserve requirements and balances used to finance priced-services assets. Based on the net clearing balance level, Reserve Banks impute a constant spread, determined by the return on a portfolio of investments, over the three-month Treasury bill rate.

[8] APT incorporates various capital market and macro-economic data to estimate a target ROE. Instead of one measure of market risk, APT includes many. Each beta measures the sensitivity of a firm's returns to a separate underlying factor, such as short-term real interest rates, inflation, default risk, and industrial production.

Equation

$$ROE_{\text{Fed priced services}} = Rf + \overbrace{[Beta_{\text{Fed priced services}} * \underbrace{E(Rm - Rf)}_{\text{Expected Market Risk Premium}}]}^{\text{Risk Premium}}$$

Rf	= risk-free rate of return
$Beta_{\text{Fed priced services}}$	= priced-services beta
Rm	= return of the overall market
$E(Rm - Rf)$	= expected market risk premium
$Beta_{\text{Fed priced services}} * E(Rm - Rf)$	= risk premium

CAPM requires judgment in determining

- The risk-free interest rate or the rate of return on an investment with no or low risk, typically measured using a Treasury security rate.
- The method, data, and period used for estimating the beta. The beta measures the market risk of a particular company relative to the risk of the overall market.
- The market risk premium, which estimates the additional return investors require to forgo the safety of investing in no or low-risk assets to bear the higher risk of investing in a specific asset.

(1) Risk-Free Rate (Investment Horizon)

Consistent with the theory of CAPM, the Board currently uses the rate on a short-term Treasury security as the risk-free interest rate.[9] In its request for comment, the Board noted that there are competing views about whether a short-term or long-term risk-free rate is more appropriate in the CAPM. One point of view is that a short-term risk-free rate is appropriate because it is consistent with the time horizon of investors in liquid securities markets. This approach also is consistent with the yearly price-setting for Federal Reserve services. Another point of view advocates using a long-term risk-free rate, such as the ten-year Treasury bond rate, because it more closely matches the duration of physical investments, the duration of stock market indexes used to estimate a beta, and the investment horizon of a long-term investor. It may also be considered to be more in line with the MCA's requirement for the Federal Reserve to recover all costs of providing its services over the long run. In this approach, a target ROE should represent the return that the firm expects to achieve on average over the fluctuations of the business cycle. When considering what risk-free rate term to use, generally the time horizon of the investor is matched with term of the risk-free security. If investment in the Reserve Banks' activities is assumed to be long term, this approach would support using the yield on a longer-term Treasury instrument as the risk-free rate in the CAPM to calculate the Reserve Banks' priced-services target ROE.

The Board specifically requested comment on whether a short-term or longer-term risk-free rate is more appropriate for estimating a target ROE, and if using a long-term risk-free rate less a term premium adjustment to reflect an expected average short-term risk-free rate over a ten-year horizon is reasonable.

Comments received were varied in regards to the term of the risk-free rate to use in the CAPM. One commenter supported the current practice to use a short-term rate and match the term of the risk-free rate with the frequency of the Federal Reserve pricing. One commenter suggested using a five-year Treasury rate. Three commenters supported using a long-term risk-free rate to better meet the long-term cost recovery objectives of the MCA, to reduce year-to-year volatility in the ROE, and to adopt a longer-term planning horizon. Two of these commenters supported the ten-year Treasury note rate, while the other thought using a ten-year Treasury note rate with a term premium adjustment was reasonable.

In considering the arguments for both the short- and long-term rates, the Board does not believe that one method produces conceptually superior results over the other; over time they should produce the same results, after adjusting for term premiums. In practice, a short-term rate will reduce the volatility of the combined target ROE and NICB estimates, minimizing the effect that changes in interest rates will have on prices each year. Given that private-sector businesses use both short- and long-term risk free rates and to address the CAPM volatility and the potential effect on prices, the Board will use a short-term rate in the CAPM that is consistent with the rate used to calculate NICB. This approach should decrease the sensitivity to interest rate changes of the combined ROE and NICB that are factored into the Federal Reserve's pricing.[10]

(2) Market Risk Premium

Currently, the Board uses the monthly average difference between the market return and the return of a one-month Treasury bill since 1927 to estimate the expected market risk premium (MRP). Although the Board did not specifically request comment on an appropriate MRP, some commenters suggested that the Reserve Banks' current methodology does not properly reflect more recent equity and bond market conditions and, therefore, may be overstated. One commenter encouraged the Board to investigate using an MRP of 3–6 percent because it was the commenter's sense that support for an MRP around 7 percent may be dwindling. Another commenter suggested that the Board consider estimating the MRP using a shorter time period that corresponds to the risk-free rate horizon.

[9] For the 2005 PSAF, the Board used the one-year Treasury bill rate as the risk-free rate.

[10] Initially, the risk-free rate will be based on the NICB investment rate. The NICB investment rate is based on the coupon equivalent yield of the 13-week rolling average of the three-month Treasury bill in the secondary market, from which a constant spread is applied.

In researching this issue, the Board found that practitioners and academics use different approaches to estimate an MRP that they argue produce a more realistic estimate than an MRP based on the historical average since 1927.[11] Different estimates of the MRP using historical data are attributable to choices made about averaging techniques, the term of the Treasury security that serves as the basis for the risk-free rate, and the historical time period. Choosing among the options is essentially a matter of weighing conceptual differences.

In general, there are two broad approaches to estimate the MRP. One is based on what equity investors have earned in the past, while the other is based on projections implied by current stock prices relative to earnings, cash flows, and expected future growth. In order to make the PSAF ROE calculation publicly replicable, the Board currently uses historical returns to estimate an expected MRP. When using historical data to estimate the MRP, it is important that the time span is neither so short that it is heavily influenced by atypical events nor so long that it captures market conditions that have little or no relationship to the current market and economy. In analyzing historical monthly MRP data since 1927, there are outlying observations in the years up to 1940 when compared with other observations in the following decades. These data suggest that there can be fundamental shifts in investor expectations over varying historical periods considering that different generations will have different risk tolerances based on changing economic and market conditions. The MRP would be more appropriately influenced by evolving attitudes reflected in realized MRPs if it is calculated using a rolling average of historical returns rather than the current practice of using historical returns since 1927. A rolling average would better capture changes in expectations because less relevant historical data would drop out and more relevant and recent data would be incorporated in the calculation.

The Board will adopt a rolling forty-year time horizon to estimate MRP.[12] The Board believes that forty years is sufficiently long to smooth cyclical fluctuations in realized returns, but short enough to reflect trends in required returns.

(3) Beta

Conceptually, the Reserve Banks' priced services should target the ROE that the market would require of a private firm with the same risk profile. The beta should be based on a comparable peer group of companies providing these same services and having the same risk profiles as priced-services activities. When the peer group is identified, the most relevant and appropriate methods to use for the beta can be determined and applied to estimate the market risk of priced services.

Peer Group

When it requested comment, the Board acknowledged that BHCs are not a perfect proxy for Reserve Bank priced-services activities. Some BHCs provide similar services through their correspondent banking activities, including payment and settlement services. BHCs also hold respondent (''due-to'') balances, which are similar to depository institution balances held by Reserve Banks, and have publicly available financial information.[13] As a result, BHCs have been considered the most reasonable proxy for a peer group. A major drawback to using BHCs as the proxy is that they offer diverse services with different risk profiles that reach well beyond the payment services that are provided by the Reserve Banks, such as consumer and corporate lending and investment services. Currently, the top 50 BHCs by deposit balance are used as the priced-services peer group, and since the inception of MCA, the peer group has always consisted of BHCs.

In its request for comment, the Board considered looking at the level of a BHC's involvement in correspondent banking activity, its capital structure, and its solvency ratings to refine the BHC peer group to match better the Federal Reserve priced-services activities and reduce the effect on the ROE of these noncomparable services in which BHCs are involved. The Board specifically requested comment on two alternatives to choosing a suitable peer group. The first alternative focused on continuing to select the top fifty publicly traded BHCs based on deposit balance. The Board requested comment, however, on adding filters to the selection process to focus on capital structure, risk-weighted asset ratios, and solvency ratings. The Board also requested comment on the efficacy of cross matching the top 50 BHCs by deposit balance with the top 50 BHCs by due-to balances. The Board believed that this additional selection criterion could improve the peer group selection by narrowing the group to include only those BHCs that are more involved in transaction processing and settlement services.

Only one of the commenters who specifically responded to the questions concerning the proposed peer group selection criteria supported the continued use of BHCs as an appropriate peer group for the Reserve Banks' payments services. Two commenters suggested that reliance on BHCs as a peer group would most likely overstate a target ROE for the Reserve Banks because of the overall nature and diversity of the businesses in which BHCs engage. Another commenter argued that the payments business is riskier than other BHC business lines and that using BHCs would understate the target ROE. This commenter suggested eliminating BHCs altogether and exclusively using non-bank payments processing companies as the peer group. Other suggested approaches included screening out firms whose risk profile has been heavily influenced by specific events such as severe credit losses and acquisitions; developing a target ROE based on specific BHC product line information (segment data); and broadening the peer group to include a core group of payment processing companies along with BHCs.

Finding a comparable peer group has been one of the more challenging aspects of targeting an ROE for Reserve Bank priced services. Over the years, the Board has considered a number of ways to refine the peer group to provide a better basis for imputing the profits that would have been earned had the Reserve Banks' priced-services activities been provided by a private-sector business. Earlier efforts examined whether segment data within BHCs could be used to match more closely priced-services activity, or whether other companies such as service bureaus and processing firms would be a suitable proxy for the Reserve Banks' priced-services activity. Using BHC segment data or service bureau financial information presented certain obstacles. There is no standard definition of

[11] According to an article by M.H. Goedhart, T.M. Koller, and Z.D. Williams, Number 5, Autumn 2002 ''The Real Cost of Equity,'' McKinsey on Finance, firms employ a variety of equity risk premium estimation approaches that have led to varying estimates of the equity risk premium from zero percent to 8 percent. The article states further that most practitioners now use a narrower range of 3.5 percent to 6 percent (*http://www.corporatefinance.mckinsey.com/_downloads/knowledge/mckinsey_on_finance/MoF_Issue_5.pdf*).

[12] This estimate will be based on the French data series, which is the standard data series used to estimate the MRP providing monthly return of the market over a one-month Treasury bill from 1927 to present (*http://mba.tuck.dartmouth.edu/pages/faculty/ken.french/data_library.html*)

[13] BHC due-to balances are bank deposits reported on the books of the individual institutions that make up the BHC, which originate from other banks and represent respondent balances held to provide transaction processing and settlement services.

''segment'' for use in financial reporting. As a result, segments may be reported based on any combination of customer type, product, or service provided. It is often impossible to determine in which BHC segments activities comparable to priced-services activities are included. As a result, information is not reliable, complete or consistent across BHCs. Service bureaus also provide diverse services, many of which are not comparable to those of Reserve Banks, and they typically do not provide settlement services, which represent a significant aspect of the Reserve Banks payments processing activity.

Beta Estimation Period and Weighting

In the current method, the beta is estimated from a rolling ten-year period of monthly stock returns for each BHC in the peer group. The returns of each BHC in the peer group are then market-value weighted and compared with the overall market returns. In its request for comment, the Board considered calculating the beta using monthly returns from the market over a rolling five-year period rather than a rolling ten-year period. The Board also requested comment on whether value weighting produces an appropriate beta for the Reserve Banks' priced-services activities and if equal-weighting, or an alternative weighting process, would produce a better beta estimate for priced-services.

Three commenters addressed the beta estimation period. One commenter supported using a rolling five-year period, provided that the year-to-year volatility is not significant. Another commenter also supported using a five-year estimation period to recognize changes in the banking industry. The third commenter suggested using a two-year beta estimation period with weekly or daily observations to incorporate industry changes and the evolution from paper to electronic check processing.

Two commenters addressed the weighting of the peer group beta. One commenter supported the use of equal weighting each BHC's beta to reduce the influence of firms that have large market capitalization but a small concentration of payments processing activities, and added that additional weighting by segment results would provide additional precision. Another commenter stated that value weighting is more theoretically sound.

Beta of 1.0

In its request for comment, the Board noted that some of the difficulties associated with selecting a peer group and estimating the appropriate peer group beta could be eliminated by assuming a beta of 1.0 for Reserve Bank priced services. Finance literature suggests that all betas generally move toward 1.0 over time. Experience shows this to be the case for correspondent banks and other firms that provide payments processing services. Assigning a beta of 1.0 to a firm assumes that investment in the firm's equity carries the same risk as the market, and thus, that investors require the same return on that firm's equity as they do on the market as a whole. Betas greater than 1.0 indicate greater sensitivity to market changes and betas below 1.0 indicate less sensitivity.

Of the five commenters that addressed the beta-equal-to-1.0 assumption, three expressed a preference for developing a beta based on a peer group. These commenters, however, recognized the difficulty facing the Reserve Banks in finding a comparable peer group and recommended that the Board use a different peer group to calculate beta. One commenter supported the idea of setting beta equal to 1.0, indicating that this is a reasonable simplifying assumption in view of the uniqueness of the Reserve Banks' payments business. Another indicated a preference for a static beta as opposed to one determined using a peer group as a way to minimize volatility in ROE targets, but made no suggestions for deriving the beta.

From the comments received and in recognition of the many theoretical and practical considerations in applying a peer group approach as noted earlier, the Board will no longer rely on a peer group when calculating a target ROE. Even though the long-run average of the priced-services beta is close to 1.0 under the current CAPM methodology, the continued use of BHCs as a peer group gives a false sense of precision. Instead, the Board believes that assuming a static beta of 1.0 for the Reserve Banks' priced-services beta is simple to understand, administer, and monitor while providing reasonable results.

C. Income Tax Rate Calculation

The PSAF captures taxes using a targeted pretax ROE.[14] The CAPM ROE is calculated as an after-tax measure and is then converted to a pretax measure. Currently, the PSAF tax rate is the median of the income tax rates paid by the top fifty BHCs by deposit balance over the past five years. Although the Board will not use a peer group to estimate the target after-tax ROE in the future, it believes that the current approach to derive the income tax rate remains reasonable. Because the Reserve Banks provide similar services through their correspondent banking activities, including payment and settlement services, and equity is imputed to meet the FDIC requirements of a well-capitalized depository institution, using a tax rate based on the top fifty BHCs by deposit balance continues to be an applicable and reasonable approach.

D. Broader Issues and Future Industry and Regulatory Changes

The Board requested comment on several broader issues, including annual and multi-year ROE targets, and future industry and regulatory changes.

Overall, commenters supported setting the PSAF annually to correspond with the annual setting of prices. One commenter suggested that the PSAF be computed annually and another noted that a multi-year target ROE could magnify pricing errors. Two commenters noted that firms set long-term ROE goals, and some firms adjust targets to reflect short-term events, but did not suggest that the Board adopt a long-term ROE target. One commenter noted that not offsetting past under- and over-recoveries is not comparable to the private sector and suggested that the Board recover past years' over/under recoveries in the future.

Five commenters suggested setting the target ROE by service line. Two commenters that supported the use of a service line ROE noted that doing so may be difficult due to data availability. One commenter suggested using a peer group consisting of processing companies to develop service line ROEs, while another commenter suggested validating this model with a macroeconomic approach. One commenter stated that the ROE setting process should be consistent year-to-year and did not specifically comment on an entity or service-level ROE.

One commenter suggested that the Board consider withdrawing from the check business and another commenter suggested that the Federal Reserve should not be a ''leader in the clearing business.'' Another commenter encouraged the Federal Reserve to remain a competitive provider of check services, even if cost-recovery is not achieved.

The Board also requested comment on the longer term effect of changes underway in regulatory practices and possible implications to the Reserve Banks' priced-services capital structure and the PSAF in the future. Two commenters noted that setting priced-services equity at five percent of total assets is too low to cover operational risks and suggested that the Board compare the Reserve Banks' capital

[14] Other taxes are included in priced-services actual or imputed costs.

structure to that of payment processing companies.

Two commenters suggested that the Board adopt a ''cost-plus'' benchmarking approach from which a market rate of return would be determined for each business line.[15] While there may be benefits to Reserve Banks in gaining insights from such a study, currently the Board does not contemplate incorporating this approach into its target ROE calculation. Moreover, the Board strives to use only data in the public domain to calculate the PSAF, and data from the study may not be available to the public.

III. Effects of New PSAF ROE Methodology

Using the 2005 final PSAF for illustrative purposes, the data below shows the effect of implementing a CAPM-only approach with a beta of 1.0 assumption, a rolling 40-year MRP, and the coupon-equivalent three-month Treasury bill rate as the risk-free rate. Applying the revised approach to the 2005 PSAF equity level results in a $70.2 million decrease.

TABLE.—PSAF ILLUSTRATION

[$ in millions]

	Pretax ROE (percent)	×	Equity	=	Cost of equity	PSAF
Three model approach[16]	18.1		$808.0		$146.2	$161.0
CAPM-only approach	9.4		808.0		76.0	90.8

IV. Competitive Impact Analysis

All operational and legal changes considered by the Board that have a substantial effect on payments system participants are subject to the competitive impact analysis described in the March 1990 policy statement ''The Federal Reserve in the Payments System.''[17] Under this policy, the Board assesses whether a change would have a direct and material adverse effect on the ability of other service providers to compete effectively with the Federal Reserve in providing similar services because of differing legal powers or constraints or because of a dominant market position of the Federal Reserve deriving from such legal differences. If the fees or fee structures create such an effect, the Board must further evaluate the changes to assess whether their benefits—such as contributions to payment system efficiency, payment system integrity, or other Board objectives—can be retained while reducing the hindrances to competition.

The Board is changing the PSAF methodology to develop an ROE target that reflects the return earned by private-sector service providers, consistent with the requirements of the MCA. Finance literature suggests that betas move toward 1.0 over time, including betas for correspondent banks and other firms that provide payments processing services. Because there is no perfect peer group for the Reserve Bank priced-services business, the PSAF ROE should be similar to the return of firms that provide similar services. Consequently, the fees adopted by the Reserve Banks should be based on the cost and profit targets that are comparable with those of other providers of services similar to Reserve Bank priced services. Accordingly, the Board believes that these changes will not have a direct and material adverse effect on the ability of other service providers to compete effectively with the Federal Reserve in providing similar services.

V. Paperwork Reduction Act

In accordance with the Paperwork Reduction Act of 1995 (44 U.S.C. ch. 3506; 5 CFR 1320 Appendix A.1), the Board has reviewed the proposal under the authority delegated to the Board by the Office of Management and Budget. No collections of information pursuant to the Paperwork Reduction Act are contained in the proposal.

VI. Conclusion

Based on comments received and further consideration of the issues around the appropriate method for estimating a target ROE, the Board has adopted the following PSAF ROE methodology:

- Use CAPM as the sole analytical method for developing the after-tax target ROE.
- Within the CAPM framework for estimating the after-tax ROE
  - ○ Set the risk-free rate equal to a short-term Treasury bill rate that is consistent with the rate used to calculate NICB. This will help to minimize volatility in net income from changes in interest rates.
  - ○ Use a rolling forty-year average of monthly returns to estimate the market risk premium rather than taking the average since 1927.
  - ○ Discontinue the practice of calculating a peer group beta to be used as a proxy for priced services. Instead, adopt a beta of 1.0, which approximates the return of the overall market.
- Continue to establish the effective income tax rate based on the median tax rate of the top 50 BHCs by deposit balance over the last five years.
- Continue to set the overall level of equity capital based on the FDIC guidelines for a well-capitalized depository institution for insurance premium purposes.

By order of the Board of Governors of the Federal Reserve System, October 11, 2005.

Jennifer J. Johnson,

Secretary of the Board.

[FR Doc. 05–20660 Filed 10–14–05; 8:45 am]

BILLING CODE 6210–01–P

[15] These commenters suggested that the Board participate in a future industry benchmarking study.

[16] For the 2005 PSAF, the CAE model ROE was 22.2%, the DCF model ROE was 19.7%, and the CAPM ROE was 12.3%, resulting in an average of 18.1%.

[17] FRRS 9–1558.

GENERAL SERVICES ADMINISTRATION

Privacy Act of 1974: Republication of a System of Records Notice

AGENCY: General Services Administration.

ACTION: Notice of an updated system of records subject to the Privacy Act of 1974.

SUMMARY: The General Services Administration (GSA) is providing notice of a revision to the record system, Purchase Card Program (GSA/PPFM4–10). The system provides control over expenditure of funds through the use of Federal Government purchase cards. The revision includes a new category of records, credit data, as required by the

Consolidated Appropriations Act, 2005 (P.L. 108–447) and Office of Management and Budget guidance. The notice also updates authorities, includes minor editing for clarification purposes, and updates routine uses.

EFFECTIVE DATE: The system of records will become effective without further notice on November 16, 2005 unless comments received on or before that date result in a contrary determination.

FOR FURTHER INFORMATION CONTACT GSA Privacy Act Officer. Telephone (202) 501–1452. Address: Office of the Chief People Officer (C), General Services Administration, 1800 F Street NW, Washington, DC 20405.

Dated: October 7, 2005.

June V. Huber,

Director, Office of Information Management

GSA/PPFM–10

SYSTEM NAME:

Purchase Card Program, GSA/PPFM–10

SYSTEM LOCATION:

System records are maintained by the Office of Finance, General Services Administration (GSA), at 1800 F Street, NW, Washington DC 20405, and by designated purchase card coordinators' offices in GSA regions. Contact the System Manager for additional information.

PERSONS COVERED BY THE SYSTEM:

The system includes employees of GSA, and of independent offices and commissions serviced by GSA, who qualify to use Federal Government charge cards for making authorized purchases for official business.

TYPE OF RECORD SYSTEM:

The system provides control over expenditure of funds through the use of Federal Government purchase cards. System records include:

a. Personal information on charge card users, including names, home or business telephone numbers and addresses, Social Security Numbers, date of birth, employment information, and credit data in the form of credit scores (examples of credit scores are FICO, an acronym for Fair Isaac Corporation, a Beacon score, etc.) or commercial and agency investigative reports showing debtors' asset, liabilities, income, expenses, bankruptcy petitions, history of wage garnishments, repossessed property, tax liens, legal judgments on debts owed, and financial delinquencies; and

b. Account processing and management information, including charge card transactions, contractor monthly reports showing charges to individual account numbers, account balances, and other data needed to authorize, account for, and pay authorized purchase card expenses.

AUTHORITY FOR MAINTAINING THE SYSTEM:

Federal Acquisition Regulation (FAR), Part 13, 48 CFR part 13, Public Law 93–579 section 7(b), and Section 639 of the Consolidated Appropriations Act, 2005 (P.L. 108–447).

PURPOSE:

To establish and maintain a system for operating, controlling, and managing the purchase card program involving commercial purchases by authorized Government employees.

ROUTINE USES OF THE RECORD SYSTEM, INCLUDING TYPES OF USERS AND THEIR PURPOSES IN USING THE SYSTEM:

System information may be accessed and used by authorized GSA employees or contractors to conduct official duties associated with the management and operation of the purchase card program. Information from this system also may be disclosed as a routine use:

a. In any legal proceeding, where pertinent, to which GSA is a party before a court or administrative body.

b. To authorized officials engaged in investigating or settling a grievance, complaint, or appeal filed by an individual who is the subject of the record.

c. To a Federal agency in connection with the hiring or retention of an employee; the issuance of a security clearance; the reporting of an investigation; the letting of a contract; or the issuance of a grant, license, or other benefit to the extent that the information is relevant and necessary to a decision.

d. To the Office of Personnel Management (OPM), the Office of Management and Budget (OMB), or the Government Accountability Office (GAO) when the information is required for program evaluation purposes.

e. To a Member of Congress or staff on behalf of and at the request of the individual who is the subject of the record.

f. To an expert, consultant, or contractor of GSA in the performance of a Federal duty to which the information is relevant.

g. To the National Archives and Records Administration (NARA) for records management purposes.

h. To the GSA Office of Finance for debt collection purposes (see GSA/PPFM–7).

POLICIES AND PRACTICES FOR STORING, RETRIEVING, ACCESSING, RETAINING, AND DISPOSING OF RECORDS IN THE SYSTEM:

STORAGE:

Information may be collected on paper or electronically and may be stored on paper or on electronic media, as appropriate.

RETRIEVAL:

Records are retrievable by a personal identifier or by other appropriate type of designation approved by GSA.

SAFEGUARDS:

System records are safeguarded in accordance with the requirements of the Privacy Act, the Computer Security Act, and OMB Circular A–130. Technical, administrative, and personnel security measures are implemented to ensure confidentiality and integrity of the system data stored, processed, and transmitted. Paper records are stored in secure cabinets or rooms. Electronic records are protected by passwords and other appropriate security measures.

DISPOSAL:

Disposition of records is according to the National Archives and Records Administration (NARA) guidelines, as set forth in the handbook, GSA Records Maintenance and Disposition System (OAD P 1820.2A and CIO P 1820.1), and authorized GSA records schedules.

SYSTEM MANAGER AND ADDRESS:

Director, Financial Initiative Division (BCD), Office of Finance, Office of the Chief Financial Officer, General Services Administration, 1800 F Street, NW, Washington DC, 20405.

NOTIFICATION PROCEDURE:

A Privacy Act Statement on the purchase card data collection form notifies individuals of the purpose and uses of the information they provide. Employees may obtain information about whether they are a part of this system of records from the system manager at the above address.

RECORD REVIEW PROCEDURES:

Requests from individuals for access to their records should be addressed to the system manager.

PROCEDURE TO CONTEST A RECORD:

GSA rules for access to systems of records, contesting the contents of systems of records, and appealing initial determinations are published at 41 CFR Part 105–64.

RECORD SOURCES:

Information is obtained from individuals submitting charge card applications, monthly contractor

reports, purchase records, managers, other agencies, non-Federal sources such as private firms, and other agency systems containing information pertaining to the purchase card program.

[FR Doc. 05–20689 Filed 10–14–05; 8:45 am]

BILLING CODE 6820–34–S

DEPARTMENT OF HEALTH AND HUMAN SERVICES

Centers for Disease Control and Prevention

Advisory Committee for Injury Prevention and Control (ACIPC): Teleconference

In accordance with Section 10(a)(2) of the Federal Advisory Committee Act (Pub. L. 92–463), the Centers for Disease Control and Prevention (CDC) announces the following subcommittee meeting.

Name: Science and Program Review Subcommittee to ACIPC.

Time and Date: 1 p.m.–3 p.m., November 2, 2005.

Place: The teleconference call will originate at the Centers for Disease Control and Prevention in Atlanta, Georgia. Please see **SUPPLEMENTARY INFORMATION** for details on accessing the teleconference.

Status: Open to the public, teleconference access limited only by availability of 50 telephone ports.

Purpose: The Subcommittee provides advice on the needs, structure, progress, and performance of the National Center for Injury Prevention and Control (NCIPC) programs. The Subcommittee provides second-level scientific and programmatic review for applications for research grants, cooperative agreements, and training grants related to injury control and violence prevention, and recommends approval of projects that merit further consideration for funding support. The Subcommittee also advises on priorities for research to be supported by contracts, grants, and cooperative agreements and provides concept review of program proposals and announcements.

Matters to be Discussed: The subcommittee will meet to review, discuss, and evaluate program review documents.

Agenda items are subject to change as priorities dictate.

SUPPLEMENTARY INFORMATION: This conference call is scheduled to begin at 1 p.m. Eastern Standard Time. To participates in the teleconference, please dial 1–877–951–7375, Pass Code 603636. You will then be automatically connected to the call.

FOR FURTHER INFORMATION CONTACT: Ms. Louise Galaska, Executive Secretary, ACIPC, NCIPC, CDC, 4770 Buford Highway, NE., M/S K02, Atlanta, Georgia 30341–3724, telephone 770/488–4694.

The Director, Management Analysis and Services Office, has been delegated the authority to sign **Federal Register** notices pertaining to announcements of meetings and other committee management activities, for both CDC and the Agency for Toxic Substances and Disease Registry.

Dated: October 12, 2005.

Alvin Hall,

Director, Management Analysis and Services Office, Centers for Disease Control and Prevention.

[FR Doc. 05–20685 Filed 10–14–05; 8:45 am]

BILLING CODE 4163–18–P

DEPARTMENT OF HEALTH AND HUMAN SERVICES

Centers for Disease Control and Prevention

Decision To Evaluate a Petition To Designate a Class of Employees at the Ames Laboratory, on the Iowa State University Campus, Ames, IA, To Be Included in the Special Exposure Cohort

AGENCY: Centers for Disease Control and Prevention (CDC), Department of Health and Human Services (HHS).

ACTION: Notice.

SUMMARY: The Department of Health and Human Services (HHS) gives notice as required by 42 CFR 83.12(e) of a decision to evaluate a petition to designate a class of employees at the Ames Laboratory, on the Iowa State University Campus, Ames, Iowa, to be included in the Special Exposure Cohort under the Energy Employees Occupational Illness Compensation Program Act of 2000. The initial proposed definition for the class being evaluated, subject to revision as warranted by the evaluation, is as follows:

Facility: Ames Laboratory, on the Iowa State University Campus, and/or AEC/DOE facilities, including Annex 1, the 'old' women's gymnasium, 'Little Ankeny', Chemistry Building, Wilhelm Hall.

Location: Ames, Iowa.

Job Titles and/or Job Duties: All scientists, production workers, technicians, salaried graduate students, physical plant workers, maintenance, administrative and support staff and subcontracted workers.

Period of Employment: January 1, 1942 through December 31, 1955.

FOR FURTHER INFORMATION CONTACT: Larry Elliott, Director, Office of Compensation Analysis and Support, National Institute for Occupational Safety and Health, 4676 Columbia Parkway, MS C–46, Cincinnati, OH 45226, Telephone 513–533–6800 (this is not a toll-free number). Information requests can also be submitted by e-mail to *OCAS@CDC.GOV.*

Dated: October 11, 2005.

John Howard,

Director, National Institute for Occupational Safety and Health, Centers for Disease Control and Prevention.

[FR Doc. 05–20716 Filed 10–14–05; 8:45 am]

BILLING CODE 4163–19–P

DEPARTMENT OF HEALTH AND HUMAN SERVICES

Centers for Disease Control and Prevention

Decision To Evaluate a Petition to Designate a Class of Employees at the Linde Ceramics Plant, Tonawanda, NY, To Be Included in the Special Exposure Cohort

AGENCY: Centers for Disease Control and Prevention (CDC), Department of Health and Human Services (HHS).

ACTION: Notice.

SUMMARY: The Department of Health and Human Services (HHS) gives notice as required by 42 CFR 83.12(e) of a decision to evaluate a petition to designate a class of employees at the Linde Ceramics Plant, Tonawanda, New York, to be included in the Special Exposure Cohort under the Energy Employees Occupational Illness Compensation Program Act of 2000. The initial proposed definition for the class being evaluated, subject to revision as warranted by the evaluation, is as follows:

Facility: Linde Ceramics Plant.

Location: Tonawanda, New York.

Job Titles and/or Job Duties: Chemical Operators.

Period of Employment: July 1, 1943 through September 30, 1946.

FOR FURTHER INFORMATION CONTACT: Larry Elliott, Director, Office of Compensation Analysis and Support, National Institute for Occupational Safety and Health, 4676 Columbia Parkway, MS C–46, Cincinnati, OH 45226, Telephone 513–533–6800 (this is not a toll-free number). Information requests can also be submitted by e-mail to *OCAS@CDC.GOV.*

Dated: October 11, 2005.

John Howard,

Director, National Institute for Occupational Safety and Health, Centers for Disease Control and Prevention.

[FR Doc. 05–20717 Filed 10–14–05; 8:45 am]

BILLING CODE 4163–19–P

DEPARTMENT OF HEALTH AND HUMAN SERVICES

Indian Health Service

Organization, Functions, and Delegations of Authority

Part G—Indian Health Service

Part G, of the Statement of Organization, Functions, and Delegations of Authority of the Department of Health and Human Services (HHS), as amended at 52 FR 47053–67, December 11, 1987, as amended at 60 FR 56606, November 9, 1995, as amended at 61 FR 67048, December 19, 1996, as amended at 69 FR 41825 July 12, 2004, and most recently as amended at 70 FR 24087 May 6, 2005 is hereby amended to reflect a reorganization of the Indian Health Service (IHS) Headquarters (HQ). The goal of the reorganization is to demonstrate increased leadership and advocacy, while improving the Agency's responsibilities for oversight and accountability. We have considered the President's Management Agenda, the Secretary's Workforce Restructuring Plan and recommendations from the Indian Health Design Team and the IHS Restructuring Initiatives Workgroup. Delete the functional statements for the IHS Headquarters in their entirety and replace with the following:

Chapter GA—Office of the Director

Section GA–10, Indian Health Service—Organization

The IHS is an Operating Division within the Department of Health and Human Services (HHS) and is under the leadership and direction of a Director who is directly responsible to the Secretary of Health and Human Services. The IHS Headquarters consists of the following major components:

Office of the Director (GA), Office of Tribal Self-Governance (GAA), Office of Tribal Programs (GAB), Office of Urban Indian Health Programs (GAC), Policy Formulation and Communications Groups (GAE), Office of Clinical and Preventive Services (GAF), Office of Information Technology (GAG), Office of Public Health Support (GAH), Office of Resource Access and Partnerships (GAJ), Office of Finance and Accounting (GAK), Office of Management Services (GAL), Office of Management Services (GAL) and Office of Environmental Health and Engineering (GAM).

Section GA–20, Indian Health Service—Functions

Office of the Director (OD) (GA)

Provides overall direction and leadership for the IHS: (1) Establishes goals and objectives for the IHS consistent with the mission of the IHS and ensures Agency performance is managed through goals/objectives, achievements, and/or improved outcomes; (2) provides for the full participation of Indian Tribes in the programs and services provided by the Federal Government; (3) develops health care policy; (4) ensures the delivery of quality comprehensive health services; (5) advocates for the health needs and concerns of American Indians/Alaska Natives (AI/AN); (6) promotes the IHS programs at the local, State, national, and international levels; (7) develops and demonstrates alternative methods and techniques of health services management and delivery with maximum participation by Indian Tribes and Indian organizations; (8) supports the development of individual and Tribal capacities to participate in Indian health programs through means and modalities that they deem appropriate to their needs and circumstances; (9) the IHS will carry out the responsibilities of the United States to Indian Tribes and individual Indians; (10) affords Indian people an opportunity to enter a career in the IHS by applying Indian preference; and (11) ensures full application of the principles of Equal Employment Opportunity laws and the Civil Rights Act in managing the human resources of the IHS.

Office of Tribal Self-Governance (OTSG) (GAA)

Develops and oversees the implementation of Tribal self-governance legislation and authorities in the IHS, under Title V of the Indian Self-Determination and Education Assistance Act, Public Law 93–638, as amended; (2) develops and recommends policies, administrative procedures, and guidelines for IHS Tribal self-governance activities, with maximum input from IHS staff and workgroups, Tribes and Tribal organizations, and the Tribal Self-Governance Advisory Committee; (3) advises the IHS Director on Agency compliance with self-governance policies, administrative procedures and guidelines and coordinates activities for resolution of problems with appropriate IHS and HHS staff; (4) provides resource and technical assistance to Tribes and Tribal organizations for the implementation of the Tribal Self-Governance Program (TSGP); (5) participates in the reviewing of proposals from Tribes for self-governance planning and negotiation grants and recommends approvals to the IHS Director; (6) determines eligibility for Tribes and Tribal organizations desiring to participate in the TSGP; (7) oversees the negotiation of self-governance compacts and annual funding agreements with participating Tribal governments; (8) identifies the amount of Headquarters managed funds necessary to implement the annual funding agreements and prepares annual budgets for available Tribal shares in conjunction with IHS Area and Headquarters components; (9) coordinates annual reconciliation of funding agreements with IHS Headquarters components, Area Offices, and participating Tribes; (10) serves as the principal IHS office for developing, releasing, and presenting information on behalf of the IHS Director related to the IHS Tribal self-governance activities to Tribes, Tribal organizations, HHS officials, IHS officials, and officials from other Federal agencies, State and local governmental agencies, and other agencies and organizations; (11) arranges national self-governance meetings to promote the participation by all AI/AN Tribes in IHS self-governance activities and program direction; (12) participates in meetings for Self-Governance Tribal delegations visiting IHS Headquarters; and (13) participates in cross-cutting issues and processes including, but not limited to emergency preparedness/security, budget formulation, self-determination issues, Tribal shares computations and resolutions of audit findings as may be needed and appropriate.

Office of Tribal Programs (PT) (GAB)

(1) Assures that Indian Tribes and Tribal organizations are informed regarding pertinent health policy and program management issues; (2) assures that consultation and participation by Indian Tribes and organizations occurs during the development of IHS policy and decision making; (3) provides overall Agency leadership concerning functions and responsibilities associated with self-determination contracting (Title I of the Indian Self-Determination Act); (4) advises the IHS Director and senior management on activities and issues related to self-determination contracting; (5) monitors Agency compliance with self-determination policies, administrative procedures, and guidelines; (6) provides Agency

leadership in planning and conducting a program of expert guidance, technical assistance, and support to Indian Tribes that continue to receive their health services directly from the IHS; (7) administers a national grant program designed to assist Tribes and Tribal organizations in beginning and/or expanding self-determination activities; (8) provides Agency leadership in the development of policy; (9) discharges operational responsibilities, with respect to the contract support cost (CSC) program administered by the IHS; (10) provides advice to the IHS Director and senior management on Tribal issues and concerns by acting as liaison with Tribal leaders, national Tribal organizations, inter-Tribal consortiums and Area health boards; (11) provides leadership in the management process of receiving visiting delegations of Tribal leaders and representatives to IHS Headquarters and provides staff assistance to the Office of the Director with respect to Tribal meetings at locations outside of Headquarters; (12) provides overall Agency leadership with respect to policy development and issues concerning the Federal recognition of new Tribes; (13) supports Tribes in managing health programs; (14) coordinates available support from other public and private agencies and organizations; (15) maintains a central database on relevant information to contact Tribal leaders, health programs, etc.; and (16) participates in cross-cutting issues and processes including, but not limited to emergency preparedness/security, budget formulation, self-determination issues, Tribal shares computations and resolution of audit findings as may be needed and appropriate.

Office of Urban Indian Health Programs (OUIHP) (GAC)

(1) Advises the IHS Director on the activities and issues related to the IHS' implementation of Title V, ''Indian Health Care Improvement Act'', as amended; (2) develops and recommends policies, administrative procedures, and guidelines for IHS services and activities for Urban Indian health programs and organizations; (3) assures that urban Indian health programs and organizations are informed of pertinent health policies; (4) ensures that consultation with urban Indian health programs and organizations occurs during the development of IHS policy to the extent allowed by law; (5) supports Urban Indian health programs and organizations in managing health programs; (6) coordinates support available from other public and private agencies and organizations; (7) advises the IHS Director on Agency compliance with Urban Indian health program policies, administrative procedures, and guidelines; (8) maintains relevant information on urban Indian health programs and organizations; (9) coordinates meetings and other communications with urban Indian health program representatives; and (10) participates in cross-cutting issues and processes including, but not limited to emergency preparedness/security, budget formulation, self-determination issues, Tribal shares computations and resolution of audit findings as may be needed and appropriate.

Policy Formulation and Communications Group (PFCG) (GAE)

(1) Analyzes policy-related issues; (2) provides recommendations for resolving policy conflicts; (3) evaluates policy options and forecasts their costs, benefits, and long-term results; (4) ensures consistency between and within public agency statements, external correspondence, legislative and regulatory positions and internal policy development; (5) disseminates information to IHS consumers, stakeholders, and the general public regarding the activities of the IHS and the health status of AI/AN people and communities; and (6) participates in cross-cutting issues and processes including, but not limited to emergency preparedness/security, budget formulation, self-determination issues, Tribal shares computations and resolution of audit findings as may be needed and appropriate.

Public Affairs Staff (PAS) (GAE1)

(1) Serves as the principal advisor for strategic planning on communications, media relations, and public affairs policy formulation and implementation; (2) ensures IHS policy is consistent with directives from the Assistant Secretary for Public Affairs; (3) provides leadership and advocacy to establish and implement policy for internal and external dissemination of Agency information intended for public release or employee and stakeholder information; (4) serves as the central office for technical guidance and assistance to IHS staff for the development of public affairs and media communication; (5) coordinates public affairs activities with other public and private sector organizations; (6) coordinates the clearance of IHS public relations activities, campaigns, and communications materials; (7) represents the IHS in discussions regarding policy and public affairs initiatives/implementation; (8) provides technical assistance and advice relative to the effect public affairs initiatives/implementation would have on the IHS; (9) collaborates with the Division of Regulatory Affairs, for review and response to media requests received under the Freedom of Information Act (FOIA) or the Privacy Act, and ensures the security of IHS documents used in such responses that contain sensitive and/or confidential information; and (10) serves as the IHS liaison office for press and public affairs with HHS, IHS Area Offices, media and other external organizations and representatives.

Diversity Management and Equal Employment Opportunity Staff (DMEEOS) (GAE2)

(1) Administers the IHS equal employment opportunity, civil rights, and affirmative action and alternative Dispute Resolution programs, in accordance with applicable laws, regulations, and HHS policies; (2) plans and oversees the implementation of IHS affirmative employment and special emphasis programs; (3) reviews data and advises IHS managers of possible discriminatory trends; (4) ensures immediate implementation of required actions on complaints of alleged sexual harassment or discrimination; (5) decides on accepting, for investigation, or dismissing discrimination complaints and evaluates accepted complaints for procedural sufficiency and investigates, adjudicates, and resolves such complaints; (6) evaluates accepted complaints for procedural sufficiency and investigates, adjudicates, and resolves such complaint; and (7) develops/administers equal employment opportunity education and training programs for IHS managers, supervisors, counselors, and employees.

Executive Secretariat Staff (ESS) (GAE3)

(1) Serves as the Agency's liaison with the Office of the Secretary's Executive Secretariat on IHS program, policy, and special matters; (2) reviews correspondence received by the IHS Director and assigns reply or follow-up action to appropriate IHS Headquarters program offices and IHS Area Offices; (3) ensures the quality (responsiveness, clarity, and substance) of IHS-generated correspondence prepared for the IHS Director's signature by coordinating the review of integrity and policy issues, and performing standard edits and revisions; (4) reviews and coordinates clearance of decision documents for the IHS Director's approval to ensure successful operations and policy-making within the Agency; (5) assists IHS officials as they prepare documents for the HHS Secretary's review, decision, and/or signature; (6) performs

special writing assignments for the IHS Director; (7) manages the flow of executive correspondence and related information to Tribes, Tribal organizations, heads of Federal departments and agencies, Congressional Staff offices, and members of Congress; (8) maintains official records for the IHS Director's correspondence and conducts topic research of files, as needed; (9) maintains an electronic document handling system to assist in managing the timely processing of internal and external executive correspondence; (10) conducts training to promote conformance by IHS Headquarters and Area staff to the IHS Executive Correspondence Guidelines and the electronic document handling system; and (11) tracks reports required by Congress.

Congressional and Legislative Affairs Staff (CLAS) (GAE4)

(1) Serves as the principal advisor to the IHS Director on all legislative and Congressional relations matters; (2) advises the IHS Director and other IHS officials on the need for changes in legislation and manages the development of IHS legislative initiatives; (3) serves as the IHS liaison office for Congressional and legislative affairs with Congressional offices, the HHS, the Office of Management and Budget (OMB), the White House, and other Federal agencies; (4) tracks all major legislative proposals in the Congress that would impact Indian health; (5) ensures that the IHS Director and appropriate IHS and HHS officials are briefed on the potential impact of proposed legislation; (6) represents the IHS in discussions regarding policy and legislative initiatives/implementation; (7) provides technical assistance and advice relative to the effect that initiatives/implementation would have on the IHS; (8) establishes collaborations with Headquarters Officers on programmatic and financial issues related to budget formulation; (9) conducts legislative analysis; (10) provides support and serves as liaison to the IHS Director relative to IHS appropriations efforts; (11) directs the development of IHS briefing materials for Congressional hearings, testimony, and bill reports; (12) analyzes legislation for necessary action within the IHS; (13) develops appropriate Legislative Implementation Plans; and (14) coordinates with IHS offices as appropriate to provide leadership, advocacy, and technical support to respond to requests from the public, including Tribal governments, Tribal organizations, and Indian community organizations regarding IHS legislative issues.

Policy Support Staff (PSS) (GAE5)

(1) Organizes, facilitates, and supports stakeholder task teams to advise the IHS Director on major policy issues; (2) represents the IHS Director in meetings with IHS employees and high-level management officials within the IHS, the HHS, or other Federal agencies, Tribes, and other organizations; (3) provides staff support to the IHS Director, including preparation of presentations and briefings; (4) provides staff support to senior managers, councils and groups; (5) completes special assignments for the IHS Director that may require coordination with other IHS offices or other Federal agencies, Tribes, or Tribal organizations; (6) serves as the IHS liaison for inter-governmental and private sector initiatives that impact health care services and management of the IHS; and (7) participates on inter-governmental task forces.

Office of Clinical and Preventive Services (OCPS) (GAF)

(1) Serves as the primary source of national advocacy, policy development, budget development and allocation for clinical, preventive, and public health programs for the IHS, Area Offices, and Service Units; (2) provides leadership in articulating the clinical, preventive, and public health needs of AI/AN, including consultation and technical support to clinical and public health programs; (3) develops, manages, and administers program functions that include, but are not limited to, alcohol and substance abuse, behavioral health, chronic diseases such as diabetes, asthma, dental services, medical services, Health Promotion/Disease Prevention, domestic violence, pharmacy and pharmaceutical acquisition, community health representatives, emergency medical services, health records, disabilities, Human Immunodeficiency Virus/ Acquired Immune Deficiency Syndrome, maternal health, child health, clinical nursing, public health nursing, women's health, nutrition and dietetics, and elder care; (4) investigates service delivery and community prevention evidence-based and best practice models for dissemination to community service locations; (5) expands the availability of resources available for AI/AN health by working with public and private entities as well as Federal agencies within and outside the HHS; (6) coordinates development of staffing requirements for new or replacement health care facilities and approves Congressional budget requests for staffing, in collaboration with the Office of Environmental Health and Engineering; (7) provides program oversight and direction for the facilities planning and construction process; (8) develops and coordinates various Health Initiative and Nursing grant programs; (9) provides the national focus for recruitment and retention of health professionals and coordinates with the scholarship and loan repayment programs; (10) works with the Contract Health Services (CHS) program on CHS denial appeals to the IHS Director and in determining CHS medical priorities; (11) manages the clinical (medical, nursing, pharmacy, dental) features of medical tort claims against the IHS; (12) works with the Office of Management Services in managing the clinical aspects of the IHS workman's compensation claims; (13) oversees IHS efforts in a variety of quality assurance and improvement activities, including patient safety; (14) monitors approximately one-half of the IHS's Government Performance and Results Act (GPRA) indicators, overseeing indicator development, data collection, and reporting results; and (15) participates in cross-cutting issues and processes including, but not limited to emergency preparedness/security, budget formulation, self-determination issues, border health initiatives, Tribal delegation meetings, Tribal shares computations and resolution of audit findings as may be needed and appropriate.

Emergency Preparedness and Emergency Medical Services Staff (EPEMSS)

(1) Provides overall direction and leadership for the IHS in regard to establishing IHS goals and objectives consistent with those of the Department of Homeland Security and the HHS, addressing the mission critical elements of emergency preparedness; (2) provides leadership for the development of emergency preparedness plans, policies, and services, including the continuity of operations plans, deployment, public health infrastructure, and emergency medical services; (3) coordinates IHS activities and resources with the activities and available resources of other government and non-government programs for essential services related to homeland security and emergency preparedness; (4) advocates for the emergency preparedness needs and concerns of AI/AN and promotes these program activities at the local, State, national, and international levels; and (5) advocates and coordinates support for Tribal emergency medical services

programs, including training and equipment.

Division of Behavioral Health (DBH) (GAFA)

(1) Applies identified profession and program standards, monitors and evaluates community and Area-wide services provided through grants or contracts with AI/AN Tribes, villages, organizations, and direct IHS operations for mental health, social services, and alcohol/substance abuse; (2) coordinates AI/AN community behavioral health programs including alcohol/substance abuse prevention and treatment, mental health, and social work with program directors, division staff, Area staff, and other agencies and institutions; (3) coordinates contracts and grants for behavioral health services and monitors services provided; (4) makes program and policy changes using data analysis, recommendations from operational levels, research results, and coordinates resource allocation from program policies; (5) provides behavioral health program consultation to AI/AN groups and IHS staff; (6) provides leadership in the identification of behavioral change interventions and supports implementation at the community level; (7) coordinates with Federal, State, professional, private, and community organizations on alternate health care resources; (8) works with other Federal agencies and departments to provide additional Federal resources for AI/AN behavioral health programs; (9) provides financial resources and programmatic oversight for complying with the Americans With Disabilities Act through programs such as the Indian Children's Program, and for elders through partnerships with the Administration on Aging and the National Indian Council on Aging; (10) measures and evaluates the quality of behavioral health care services; and (11) prepares information on behavioral health for budgetary hearings and provides program evaluation results to the IHS Director, the Congress, and the Administration.

Division of Clinical and Community Services (DCCS) (GAFB)

(1) Manages, develops, and coordinates a comprehensive clinical, preventive and public health approach to clinical and community program focusing on maternal and child health, Indian children services including preventive health support services for Head Start and Early Head Start Health Programs, medicine, nutrition, HIV/AIDS, pharmacy, health records, health education, health promotion, and disease prevention; (2) develops objectives, priorities, and methodologies for the conduct and evaluation of clinical, preventive, and public health for community health-based programs; (3) provides, develops, and implements IHS guidelines, standards, policies, and procedures on clinical, preventive, and public health for community based programs and initiatives; (4) monitors, evaluates, and provides consultation to clinical and community programs; (5) plans jointly with other programs and divisions of the IHS and other agencies on research and coordination of services; (6) coordinates professional staff recruitment and training needs, and scholarship recipient assignments and development to meet Area Office, Service Unit, and Tribal health professional human resource needs; (7) coordinates and monitors contracts and grants with IHS programs and other entities, in collaboration with the Division of Acquisitions Policy and the Division of Grants Operations; (8) develops and disseminates information and materials to IHS facilities and to Tribes and Urban Indian health programs; (9) develops program budget materials for resource management, program data collection, administrative system integrity and accountability and responds to Congressional and Departmental inquiries; and (10) manages the Veterans Affairs Pharmaceutical Prime Vendor Contract and IHS National Core Formulary.

Division of Nursing Services (DNS) (GAFC)

(1) Plans, develops, coordinates, evaluates, manages and advocates for Clinical and public health Nursing Services, including acute care, ambulatory care, and public health nursing services, Women's Health, and Community Health Representative Programs (CHR); (2) identifies and establishes standards for these programs; (3) provides leadership, professional guidance, and staff development; (4) plans, develops, coordinates, manages, and evaluates nursing CHR education to better meet the needs of nursing and CHRs in Indian Health programs; (5) coordinates professional staff, including nursing recruitment, scholarship recipients, assignment and development to meet Area Office, Service Unit, and Tribal needs in accordance with IHS policies and procedures; (6) provides guidance in planning, developing, and maintaining management information systems that will benefit documentation and data collection by and for nurses and community health workers; and (7) prepares budgetary data, analysis and program evaluations and prepares information for program and budget presentations, as well as Congressional hearings.

Division of Oral Health (DOH) (GAFD)

(1) Plans, develops, coordinates, and evaluates dental health programs; (2) establishes staffing, procedural, facility, and dental contract standards; (3) coordinates professional recruitment, assignment, and staff development; (4) represents dental staff and Area Dental Programs in personnel matters, including the monitoring of personnel orders for both appointments and transfers, establishing promotion priority lists, processing special pay and retention bonus contracts, and serving as the HQ representative on adverse action cases; (5) improves effectiveness and efficiency of dental programs; (6) develops resource opportunities and monitors utilization of resources for dental health programs; (7) formulates, allocates and analyzes dental program budget and prepares information for program and budget presentations as well as Congressional inquiries; (8) advocates for oral health needs of the AI/AN population; (9) coordinates health promotion and disease prevention activities for the dental program; (10) monitors oral health status and treatment needs of the AI/AN population; (11) provides clinical and technical support to field staff by way of oral health surveys, provision of clinical trials, consultation on treatment cases, publication of quarterly newsletters and serving as liaison with public and private institutions, as well as major universities to evaluate new and existing strategies for addressing oral health problems in AI/AN; (12) serves as the IHS liaison for oral health issues with other Federal agencies; (13) serves as main source of information transfer to field staff via mediums including, but not limited to, teleconference hookups, electronics (email/listservs), conventional mail and meeting attendance; and (14) maintains and distributes information from the IHS centralized dental database, including workload, program resource directories and exploring the applicability of new health informatics technologies and systems.

Division of Diabetes Treatment and Prevention (DDTP) (GAFE)

(1) Plans, manages, coordinates, and evaluates a comprehensive clinical and community program focusing on type 2 diabetes in AI/AN communities; (2) plans, manages, develops, coordinates, and evaluates the Congressionally-mandated Special Diabetes Program for Indians, a large grant program focused

on the prevention and treatment of diabetes; (3) coordinates and monitors contracts and grants with IHS, Tribal, Urban Indian health programs and other entities; (4) develops objectives, priorities and methodologies for the conduct of clinical and community diabetes programs; (5) monitors, evaluates, and provides consultation to clinical and community diabetes grant programs and other new initiatives; (6) provides leadership, professional guidance, and staff development to Area Diabetes Consultants, Model Diabetes Programs and IHS, Tribal, Urban diabetes program providers; (7) coordinates diabetes training needs for Area Offices, Service Units, and Tribes; (8) develops and implements IHS standards of care, clinical guidelines, policies, and procedures for diabetes and diabetes-related conditions; (9) coordinates model diabetes program sites; (10) develops and disseminates diabetes-related information and materials to IHS, Tribes and Urban Indian health programs; (11) is responsible for preparing budgetary data, analysis and program evaluations for budget presentations and Congressional hearings; and (12) coordinates a chronic disease strategic plan initiative for the IHS.

Office of Information Technology (OIT) (GAG)

(1) Provides Chief Information Officer (CIO) services and advises the IHS Director on all aspects of information resource management and technology ensuring Agency compliance with related Federal laws, regulations and policies; (2) directs the development, implementation, and maintenance of policies, procedures, standards, and architecture for information resource management, technology activities, and services in the IHS; (3) directs strategic planning and budgeting processes for information resources and technology; (4) leads IHS efforts in the development and implementation of information resource and technology management initiatives in IHS; (5) directs the design, development, acquisition, implementation, and support of information systems and services used in the IHS; (6) directs the activities of the IHS Information Technology Investment Review Board in assessing, implementing, and reviewing the Agency's information systems; (7) contracts for information resource and technology-related software, equipment and support services in collaboration with appropriate acquisition authorities; (8) provides project management support for information resource and technology initiatives; (9) directs the development, implementation and management of the IHS Information Technology Security program to protect the information resources of the IHS; (10) provides information technology services and support to IHS, Tribal, and Urban Indian health programs; (11) ensures accessibility to information technology services; (12) represents the IHS and enters into information technology agreements with Federal, Tribal, State and other organizations; and (13) participates in cross-cutting issues and processes including, but not limited to emergency preparedness/security, budget formulation, self-determination issues, Tribal shares computations, and resolution of audit findings as may be needed and appropriate.

Division of Information Technology (DIT) (GAGA)

Provides Chief Technology Officer services and advises the CIO on all aspects of information technology; (2) develops, implements, and maintains policies, procedures and standards for information resource management and technology products and services in the IHS; (3) develops and maintains information technology strategic planning documents; (4) develops and maintains the IHS enterprise architecture; (5) develops and implements information technology management initiatives in IHS: (6) ensures IHS information technology infrastructure resource consolidation and standardization efforts support IHS healthcare delivery and program administration; (7) represents the IHS to Federal, Tribal, State, and other organizations; and (8) participates in cross-cutting issues and processes that involve information technology.

Division of Information Resources Management (DIRM) (GAGB)

(1) Advises the CIO on all aspects of information resources management; (2) develops information resource policies and procedures; (3) develops the IHS information technology budget and related documents; (4) provides budget analyses and reports to the CIO; (5) develops strategies for presenting the IHS information technology budget to IHS, Tribal, and Urban Indian health programs; (6) provides technical analyses, guidance, and support for IHS capital planning and investment control activities; (7) manages the IHS portfolio management tool; (8) manages the activities of the IHS Information Technology Investment Review Board in assessing, implementing and reviewing the Agency's information systems; (9) represents the IHS to Federal, Trbal, State, and other organizations; and (10) participates in the cross-cutting issues and processes that involve information resources management.

Division of Enterprise Project Management (DEPM) (GAGC)

(1) Advises the CIO on all aspects of information technology project management; (2) develops project management policies and procedures; (3) identifies alternatives among internal and external sources and recommends the best sources to supply information resource and technology products and services to IHS; (4) develops information resource and technology project governance structures, management plans, evaluations, protocols, documentation guides, and related materials to support effective project management; (5) provides project management and related support for IHS developed and acquired information resource and technology products and services; (6) provides customer relationship management support to project stakeholders; (7) provides quality assurance and risk management support; (8) provides contract management support for information technology initiatives; (9) provides contract liaison services to appropriate acquisition authorities; (10) represents the IHS to Federal, Tribal, State, and other organizations, and (11) participates in cross-cutting issues and processes that involve information resources and technology project management.

Division of Information Security (DIS) (GAGD)

(1) Advises the CIO on all aspects of information security; (2) develops, implements and monitors the IHS Information Technology Security program to protect the information resources of the IHS; (3) develops and maintains cyber security policies and guidance for hardware, software, and telecommunications within the IHS; (4) reviews IHS security plans for sensitive systems; (5) evaluates safeguards to protect major information systems and the information technology infrastructure; (6) monitors all IHS systems development and operations for security and privacy compliance; (7) establishes and leads IHS teams to conduct reviews of Agency programs to protect IHS cyber and personnel security programs; (8) conducts vulnerability assessments of IHS information technology infrastructure; (9) coordinates activities with internal and external organizations reviewing the IHS's information resources for fraud, waste, and abuse; (10) develops,

implements, and evaluates an employee cyber security awareness and training program; (11) establishes and leads the IHS Computer Security Incident Response Capability team; (12) represents the IHS to Federal, Tribal, State, and other organizations; and (13) participates in cross-cutting issues and processes that involve information security.

Office of Public Health Support (OPHS) (GAH)

(1) Advises and supports the IHS Director on policy, budget formulation, and resource allocation regarding the operation and management of IHS, Tribal, and Urban Indian health programs; (2) provides IHS-wide leadership, guidance and support for public health program and activities including strategic planning, evaluation, Government Performance and Results Act (GPRA), research, epidemiology, statistics, and health professions; (3) provides Agency-wide leadership and consultation to IHS, Tribal, and Urban Indian health programs on IHS goals, objectives, policies, standards, and priorities; (4) advocates for the public heath needs and concerns of AI/AN and promotes quality health care; (5) manages and provides national leadership and consultation for IHS on assessments of pubic health medical services, research agendas, special pay, and public health initiatives for the Agency, (6) provides national leadership for the IHS scholarship and loan repayment programs, including physician recruitment; (7) supports and advocates for AI/AN to access State and local public health programs; and (8) participates in cross-cutting issues and processes including, but not limited to emergency preparedness/security, budget formulation, self-determination issues, Tribal shares computations and resolution of audit finding as may be needed and appropriate.

Division of Epidemiology and Disease Prevention (GAHA)

(1) Prevents and controls chronic and communicable disease through epidemiology and applied public health practice; (2) builds capacity in Tribal communities through a network of Tribal Epidemiology Centers; (3) collaborates with the Centers for Disease Control and Prevention (CDC) and directs staff detailed to the IHS from the CDC; (4) describes causes, patterns, and risk factors for disease and death, and develops public health policy and interventions; (5) serves IHS and Tribal communities through disease surveillance, health data management, analysis and reporting, community surveys, emergency response, training in public health practice and epidemiology, consultation to clinicians and technical support for pubic health activities and assessment of public health system performance; (6) supports epidemiology, disease control, and prevention programs for chronic diseases, including cancer, tobacco control, cardiovascular disease, diabetes, kidney disease, environmental health, maternal health, child health, and others; and (7) supports epidemiology, disease control, and prevention programs for communicable diseases, including tuberculosis, HIV/AIDS, sexually-transmitted diseases, hepatitis, hantavirus, antibiotic-resistant infections, immunizations, bioterorism preparedness and others.

Chronic Disease Branch (CDB)

Support epidemiology, disease control, and prevention programs for chronic diseases, including cancer, tobacco control, cardiovascular diseases, diabetes, kidney disease, environmental health, maternal health, child health, and others.

Infectious Disease Branch (IDB)

Supports epidemiology, disease control, and prevention programs for communicable diseases, including tuberculosis, HIV/AIDS, sexually-transmitted diseases, hepatitis, hantavirus, antibiotic-resistant infections, immunizations, bioterrorism preparedness, and others.

Division of Program Statistics (DPS) (GAHB)

(1) Plans, develops, directs, and coordinates an analytical statistical reporting program to provide data for measuring the health status and unmet health needs of the AI/AN population; (2) develops and coordinates the collection, processing, and analysis of demographic, patient care, and clinical data for the Agency; (3) maintains, analyzes, makes accessible, and publishes results from national demographic and clinical analyses; and (4) provides statistical and analytical consultation to other divisions and agencies.

Demographics Statistics Staff (DS)

(1) Plans, develops and executes a major nation-wide statistical program for the collection, processing, analysis and dissemination of demographic characteristics of the AI/AN population located throughout the United States; (2) coordinates with the National Center for Health Statistics the analysis and reporting of vital event information for the AI/AN population; and (3) provides statistical and analytical consultation to other divisions and agencies.

Patient Care Statistics Staff (PCSS)

(1) Plans, develops and executes a major nation-wide statistical program for the collection, processing, analysis and dissemination of patient care data and special studies with emphasis on health and demographic characteristics of the AI/AN population located throughout the United States; (2) evaluates facility workload trends and participates in the development of methodologies for constructing long-range estimates of inpatient and ambulatory care workloads for use in facility construction and planning; and (3) coordinates with the IHS National Data Repositories, the analysis and reporting of program, patient care and clinical data for the Agency.

Division of Planning, Evaluation and Research (DPER) (GAHC)

(1) Develops and coordinates Agency strategic planning and performance measurement efforts (including GPRA and Program Assessment Rating Tool) with budgeting requirements in consultation with IHS program staff; (2) provides consultation and coordination on the IHS budget formulation activity for planning and data purposes; (3) conducts, facilitates, solicits, coordinates, and evaluates community-oriented practice-based research related to health problems and the delivery of care to AI/AN people and communities with a major focus on improving the health status and systems of care; (4) provides guidance and support for IHS-wide program evaluation projects; and (5) provides support for public health planning services, facilities and staffing.

Division of Health Professions Support (DHPS) (GAHD)

(1) Develops and implements IHS programs to recruit, select, assign, and retain health care professionals and coordinates these activities with the respective disciplines; (2) assesses professional staffing needs and coordinates the development of strategies and systems to satisfy these needs; (3) coordinates the planning and development of IHS strategies and systems to improve the morale and retention of all professionals; (4) coordinates Headquarters activities for physician residency and training programs; (5) coordinates the IHS National Health Service Corps (NHSC) program, including liaison and assignment of NHSC scholarship recipients to IHS; (6) develops priority sites for the loan repayment program; (7) coordinates placement of professionals

with loan repayment obligations; (8) serves as IHS coordinator for pre-medical and medical school IHS scholarship recipients; (9) retrieves, establishes, and manages information and data on the IHS work force; and (10) conducts work force data analyses, including trends and projections, identifying work force needs by major personnel systems, categories, and disciplines.

Health Professions Support Branch (HPSB)

(1) Develops the IHS program to recruit, select, assign, and retain health care professionals, in accordance with policies and guidance provided by the Division of Human Resources; (2) assesses IHS professional staffing needs; (3) provides research and analysis functions for Chief Medical Officers, Clinical Directors, and senior clinicians; (4) manages and supports health professions education programs and activities; and (5) develops and administers Indian Health Professions programs authorized by the Indian Health Care Improvement Act (IHCIA), as amended.

Loan Repayment Branch (LRB)

(1) Awards, monitors, places (in IHS, Tribal, and Urban sites), and processes waivers and defaults of participants in the Loan Repayment Program (LRP) as mandated by Section 108 of the IHCIA; (2) coordinates the LRP payment and debt management function with the Program Support Center; and (3) coordinates program administration with the IHS Area Office and Service Unit personnel, particularly recruitment and retention activities, including Clinical Directors, Chief Medical Officers, and professional recruiters.

Scholarships Branch (SB)

Develops, administers, and evaluates programs in the IHS Scholarship Program authorized under the IHCIA: Section 102 (Health Professions Recruitment Program for Indians), Section 103 (Health Professions Preparatory Scholarship Program for Indians), Section 104 (Indian Health Professions Scholarship Program), Section 105 (IHS Externs Program), Section 120 (Matching Grants to Tribes for Scholarship Programs), Section 217 (Indians Into Psychology Program), and other funded programs authorized under the IHCIA.

Office of Resource Access and Partnerships (ORAP) (GAJ)

(1) Provides Agency-wide leadership and consultation to the IHS direct operations and Tribal programs on IHS goals, objectives, policies, standards and priorities regarding the operations and management of the Business Office Service (BOS) and the Contract Health Services (CHS) and the IHS Partnership programs; (2) develops and implements objectives, priorities, standards, measures and methodologies for the BOS and CHS and Partnership program; (3) manages and provides leadership, advocacy, consultation and technical support to Headquarters, IHS Areas and local levels on the full scope of BOS, CHS and Partnership activities; (4) represents the IHS at meetings and in discussions regarding policy, legislation and other national issues; (5) provides oversight and monitors the BOS and CHS programs regarding compliance requirements, utilization reviews, revenue measures and reports; (6) formulates and analyzes BOS and CHS budgets and prepares information for program budget presentations; (7) collaborates and coordinates with IHS information technology staff and external organizations on new technologies, applications and business practices; (8) develops resource opportunities through partnerships and coordinates the BOS and CHS activities with other governmental and non-governmental programs, promoting optimum utilization of all available health resources; (9) maintains a database of all inter-agency agreements, intra-agency agreements, memoranda of agreement and memoranda of understanding with external organizations; and (10) participates in cross-cutting issues and processes including, but not limited to emergency preparedness/security, budget formulation, self-determination issues, and resolution of audit findings as may be needed and appropriate.

Division of Business Office Enhancement (DBOE) (GAJA)

(1) Serves as the primary focal point for BOS program operations and policy issues and represents BOS in national forums; (2) provides consultation to Headquarters and Area Offices and is liaison to Tribal organizations, HHS and Office of Management and Budget (OMB) regarding BOS issues; (3) reviews and improves the efficiency of access to resources and provides support for local capacity building through technical assistance, training, consultation and information systems support; (4) develops, disseminates, and maintains BOS policy and procedures manuals; (5) provides national leadership for Medicare, Medicaid, and private insurance reimbursement policy and procedures; (6) services as the primary liaison with the Center for Medicaid/Medicare Services for rate setting; (7) serves as the focal point regarding the impact of existing and proposed Laws, Regulations and Policies of Medicare and Medicaid managed care activities, including the review, evaluation, and monitoring of Sections 1115 and 1915(b) Medicaid waiver proposals and other State and Federal health care reform activities; (8) provides programmatic management, review and analysis of information systems for patient registration and billing and collections systems; (9) assures training on operations, various regulatory issues and negotiated managed care provider agreements; and (10) develops third-party budget materials and responds to Tribal, Congressional and HHS inquiries relating to third-party issues.

Division of Contract Care (DCC) (GAJB)

(1) Plans, develops, and coordinates the CHS program and required business practices; (2) develops, disseminates, and maintains CHS policy and procedures manuals; (3) formulates and monitors the CHS budget and distribution methodologies; (4) administers the Catastrophic Health Emergency Fund; (5) administers the CHS Quality Assurance Fund; (6) administers the CHS claims adjudication activity for the IHS Headquarters; (7) monitors the implementation of the IHS payment policy and reports the status to the Director, ORAP; (8) administers the IHS Fiscal Intermediary contract; (9) conducts data analysis and national utilization review and utilization management of CHS services rendered by private sector providers; and (10) provides consultation to Headquarters and Area Offices, and responds to inquiries from the Congress, Tribes, and other Federal agencies.

Office of Finance and Accounting (OFA) (GAK)

(1) Develops and prepares the budget submission for the Indian Health Service and Facilities appropriation to the HHS, OMB and the Presidents budget; (2) participates with HHS officials in budget briefings for the OMB and the Congress; (3) distributes, coordinates, and monitors resource allocations; (4) develops and implements budget, fiscal, and accounting procedures and conducts reviews and analyses to ensure compliance in budget activities in collaboration with Headquarters officials and the Tribes; (5) provides cost advisory and audit resolution services in accordance with applicable statutes and regulations; and (6) supports the Agency's Medicare Cost

Report efforts by providing necessary financial data to the contractor preparing the cost reports; and (7) participates in cross-cutting issues and processes including, but not limited to emergency preparedness/security, budget formulation, self-determination issues, Tribal shares computations, and resolution of audit findings as may be needed and appropriate.

Division of Audit (DA) (GAKA)

(1) Develops and recommends policies and procedures for Chief Financial Officer (CFO) audits; (2) develops and recommends policies and procedures for Tribes and Tribal organizations audit resolution within IHS; (3) provides advice, technical consultation, and training to IHS Headquarters, Area Offices, Tribal, and Urban Indian Health organizations for Title I, Title V, and Agency CFO audits; (4) provides audit resolution services in accordance with applicable statutes and regulations; (5) advises the Director, OFA, of proposed legislation, regulations, directives, and timelines that will affect audits within IHS, as well as how current legislation affects handling of audit-related issues; (6) manages the IHS Audit Information Management System (AIMS) and conducts analysis of data for reports and/or responses to internal and external inquiries; (7) serves as the IHS contact point to the HHS for the AIMS Report and the Accountability Report; (8) coordinates the collection of disallowed costs cited in Tribes and Tribal organizations audits; (9) coordinates the correction of non-monetary findings coded by the HHS in Tribes and Tribal organizations audits; (10) coordinates receipt of audits from all organizations funded by IHS; (11) formulates Corrective Action Plans for CFO audit deficiencies; (12) coordinates resolutions of deficiencies with IHS Headquarters senior managers and Area Directors; and (13) reports status of corrective actions to the IHS Headquarters senior managers and to the HHS.

Division of Budget Formulation (DBF) (GAKB)

(1) Interprets policies, guidelines, manual issuances, OMB circulars, and instructions from Congress, OMB, HHS, and IHS on formulation of preliminary, Departmental, and Congressional budget requests for the IHS and Indian Health Facilities appropriation requests; (2) directs the collection, review, and analysis of program and financial data from Headquarters, Area Offices, Tribes, Tribal and Urban Indian Health organizations used in determining resource requirements; (3) coordinates the preparation of the IHS preliminary, Departmental and Congressional budget justifications for the Indian Health Service and Facilities appropriations; (4) prepares witness information for hearings before the House and Senate Appropriations Committees, House Resource Committee on Interior and Insular Affairs, the Senate Committee on Indian Affairs, and other Congressional committees as requested; (5) coordinates development of responses and inserts to be used for the record by and for Congressional appropriations hearings; (6) coordinates development of briefing materials in response to Congressional concerns and hearings; and (7) develops, implements, and maintains IHS policies and procedures for Congressional budget liaison activities.

Division of Budget Execution (DBE) (GAKC)

(1) Interprets policies, guidelines, and directives from Congress, OMB, Government Accounting Office (GAO), Treasury, and the HHS on Tribal shares and execution; (2) recommends and coordinates IHS Area Budget Execution; (3) prepares apportionment requests for the Indian Health Service and Indian Health Facilities appropriations; (4) consults with the Headquarters officials on Area funding allocations; (5) monitors fund control at the appropriation level; (6) reviews IHS Headquarters memorandum of agreements for proper accounting; (7) prepares reprogramming requests; (8) advises the Director, OFA on Agency compliance with self-determination policies, administrative procedures and guidelines; (9) coordinates activities for resolution of problems with appropriate IHS Headquarters and Area staff; and (10) analyzes various operating costs and provides Program Support Center (PSC) with Area breakouts.

Division of Systems Review and Procedures (DSRP) (GAKD)

(1) Reviews, interprets and comments on policies, guidelines, and manual issuances of Congress, Treasury, GAO, the HHS and IHS on systems of fiscal managment, including the Unified Financial Management System (UFMS), and the CORE Accounting System (CORE); (2) plans, directs, and implements fiscal policies and procedures on Headquarters and field accounting; (3) Supports costs accounting activities in IHS; (4) reviews and analyzes accounting and financial management systems and trains Headquarters staff on related system interfaces; (5) supports the conversion of financial information from CORE to UFMS; (6) provides and assists Area accounting staff with accounting system transactions, correcting errors and system related emergencies; (7) serves as the Agency liaison between Agency components concerning the interface of administrative and other feeder applications with Oracle/UFMS; (8) serves as the liaison between IHS, the PSC and the HHS for reporting of prompt payment, debt management, and cash reconciliation processes; (9) coordinates, regulates, and manages the issuance of financial codes for IHS; and (10) coordinates year-end ''roll-over'' activities with PSC and IHS Headquarters and Area staffs.

Division of Financial Operations (DFO) (GAKE)

(1) Manages the IHS travel program, provides training, interprets travel regulations, conducts reviews and updates travel policy and procedures; (2) processes Headquarters travel orders and vouchers, including permanent change of station and international travel; (3) coordinates Area Directors' travel orders and vouchers; (4) coordinates the conference management functions for the Agency; (5) provides support and technical assistance to Headquarters operational components in the development of Headquarters operations budgets; (6) provides fund certification and maintains commitment registers for Headquarters components; (7) performs fund reconciliations and assists in coordination of discrepancies with financial officials; and (8) maintains Headquarters staffing status reports.

Office of Management Services (OMS) (GAL)

(1) Provides IHS-wide leadership, guidance and support for the management of human resources, grants, acquisition, records management, personal property and supply, and the regulations program; (2) formulates, administers, and coordinates the review and analysis of IHS-wide policies, delegations of authority, and organizations and functions development; (3) develops and oversees the implementation of policies, procedures and delegations of authority for IHS grants management activities, including grants added to self-governance compacts; (4) ensures that Agency policies and practices for the administrative functions identified above are consistent with applicable regulations, directives and guidance from higher echelons in the HHS and other Federal oversight agencies; (5) advises the IHS Director, in conjunction with the Office of the General Counsel

(OGC), on the resolution of statutory and regulatory issues related to the IHS and coordinates resolution of IHS legal issues with the OGC, IHS staff, and other Federal agencies; (6) assures that IHS appeal systems meet legal standards, in conjunction with the Office of the General Counsel; (7) provides leadership and direction of activities for continuous improvement of management accountability and administrative systems for effective and efficient program support services IHS-wide; (8) ensures the accountability and integrity of grants and acquisition management, records management, personal property utilization and disposition of IHS resources; (9) assures that the IHS management services, policies, procedures, and practices support IHS Indian Self-Determination Act policies; (10) assists in the assurance of Indian access to State, local, and private health programs; (11) provides leadership and advocacy of the IHS mission and goals with the HHS, Administration, Congress, and other external authorities; and (12) participates in cross-cutting issues and processes including, but not limited to emergency preparedness/security, budget formulation, self-determination issues, Tribal shares computations and resolution of audit findings as may be needed and appropriate.

Program Integrity and Ethics Staff (PIES) (GAL1)

(1) Directs the fact-finding and resolution of allegations of impropriety such as mismanagement of resources, fraud, waste, and abuse violations of the Standards of Ethical Conduct, Hatch Act and political activity and other forms of waste; (2) advises the IHS Director and IHS management of appropriate corrective and remedial actions to correct improprieties; (3) directs and provides leadership in the formulation of plans, guidance and evaluation of the IHS Personnel Security and Drug Testing Programs; (4) administers the IHS-wide management of the Agency hotline reports of allegations; (5) serves as the Agency coordinator for the HHS Office of the Inspector General (OIG), Office of Investigations; (6) manages and directs the IHS ''Ethics Program'', including the implementation of all requirements, providing advice to the IHS Director and serving as the Agency liaison with all outside investigative organizations such as the Office of Special Counsel, the General Accounting Office and the OIG; and (7) develops and implements IHS directives and training for Standards of Ethical Conduct, Hatch Act and political activity, allegations and investigations of administrative fraud, waste and abuse, drug testing, and personnel security.

Grants Policy Staff (GPS) (GAL2)

(1) Initiates new and modifies existing IHS grants administration policies and procedures in accordance with HHS grants policies; (2) provides assistance to IHS staff and grantee organizations regarding policies and procedures pertinent to the administration of IHS grants to ensure stewardship of Federal funds; (3) provides guidance to and articulates grants management policy for IHS staff on the effective utilization of financial assistance mechanisms (grants and cooperative agreements); (4) provides assistance to IHS staff on program announcement requirements as issued by OMS and HHS Grants Review and Oversight; (5) develops and maintains IHS Grants Operations/Grants Policy Web site; and (6) posts all IHS funding opportunities on IHS Grants Operations/Grants Policy Web site for Grants.gov.

Management Policy and Internal Control Staff (MPICS) (GAL3)

(1) Formulates, administers, and supports IHS-wide policies, delegations of authority, and organizations and functions development; (2) provides leadership, on behalf of the IHS Director, to functional area managers at IHS Headquarters in developing, modifying, and overseeing the implementation of IHS policies and procedures; (3) provides analysis, advisory, and assistance services to IHS managers and staff for the development, clearance, and filing of IHS directives and delegations of authority; (4) serves as principal advisor and source for technical assistance for establishment or modification of organizational infrastructures, functions, and Standard Administrative Code configurations; (5) administers the IHS's Management Control Program for assuring IHS compliance with management control requirements in the Federal Managers' Financial Integrity Act; (6) coordinates the development, clearance, and transmittal of IHS responses and follow-up to reports issued by the Office of Inspector General (OIG), the General Accounting Office (GAO), and other Federal internal and external authorities; (7) provides assistance and support to special assigned task groups; (8) conducts special program or management integrity reviews as required; and (9) oversees and coordinates the annual development and submission of the Agency's Federal Activities Inventory Reform Act report to the HHS.

Division of Commissioned Personnel Support (DCPS) (GALA)

(1) Acts as the liaison between IHS and the Office of Commissioned Corps Operations, the Office of Commissioned Corps Force Management, and the Office of Commissioned Corps Officers Support HHS; (2) advises the IHS Director, supervisors, administrators, managers, officers and dependents regarding commissioned personnel benefits, policies, procedures, and regulations, as the IHS primary point of contact for commissioned personnel management; (3) develops policies, procedures, and recommendations to the Office of Commissioned Corps Operations, the Office of Commissioned Corps Force Management, and the Office of Commissioned Corps Officers Support HHS; (4) provides direct support to the IHS Director and/or the Agency representative to the Office of the Surgeon General; and (5) produces resource materials and conducts training sessions on commissioned personnel issues for officers, supervisors, and commissioned personnel specialists in IHS Area Offices.

Division of Administrative Services (DAS) (GALB)

(1) Plans, develops and directs program support and general services programs; (2) develops and disseminates policy and procedural guidelines for uniform administrative services and practices; (3) provides guidance and support in the development, planning, and implementation of administrative functions; (4) serves as liaison with the HHS and the General Services Administration (GSA) on logistics issues affecting the IHS; (5) monitors, evaluates, and reports on administrative programs and services; (6) manages a variety of special projects; (7) provides leadership and guidance for the Agency Records Management Program; (8) develops and recommends policies and procedures for the protection and disposition of IHS records and oversees the evaluation of records management activities in the IHS; (9) develops and implements a management control system for evaluation of records management functions agency-wide; (10) provides leadership for special projects and inter-and intra-agency activities; and (11) provides guidance and oversight to the IHS on the control and safeguard of classified national security information.

Office Services Branch (OSB)

(1) Administers physical security, facility management, and space

management services real property and GSA lease management, telecommunication service, parking management, employee credentialing program, and employee transit subsidy program for Headquarters; (2) administers the agency forms, mail and printing program for Headquarters; (3) develops and implements policy and procedures for uniform office service; (4) provides leadership and coordination in the planning, development, operation, oversight, and evaluation of special office support projects in office relocations, and lease acquisition, and inter-and intra-agency activities; and (5) prepares reports on commercial printing and mail.

Property and Supply Management Branch (PSMB)

(1) Plans, develops, and administers the IHS policies on personal property and supply management in conformance with Federal personal property and supply management laws, regulations, policies, procedures, practices, and standards; (2) interprets regulations and provides advice on execution and coordination of personal property and supply management policies and programs; (3) administers management systems and methods for planning, utilizing, and reporting on administrative personal property and supply management programs, including the IHS personal property and supply accountability and controls systems; (4) provides guidance and serves as principal administrative authority on federal personal property and supply management laws, regulations, policies, procedures, practices, and standards, in conjunction with the Office of the General Counsel; (5) conducts surveys and studies involving evaluation and analysis of the personal property and supply management activities Agency-wide; (6) maintains liaison with the HHS and the GSA on personal property and supply management issues and programs affecting the IHS; (7) prepares reports on IHS personal property and supply; and (8) develops statements for annual budget formulation and presentation; (9) plans, develops, and administers an integrated IHS personal property and supply system; and (10) manages the Headquarters motor vehicles, personal property, special projects and inter/intra agency activities.

Division of Acquisition Policy (DAP) (GALC)

(1) Develops, recommends, and oversees the implementation of policies, procedures and delegations of authority for the acquisition management activities in the IHS, consistent with applicable regulations, directives, and guidance from higher echelons in the HHS and Federal oversight agencies; (2) advises the Director, Office of Management Services, of proposed legislation, regulations, and directives that affect contracts in the IHS; (3) provides leadership for compliance reviews of all IHS acquisition operations; (4) oversees completion of necessary corrective actions; (5) manages for the Agency, the HHS acquisition training and certification program; (6) supports and maintains the IHS Contract Information System and controls entry of data into the HHS Contract Information System; (7) serves as the IHS contact point for contract protests and the HHS contact for contract-related issues; (8) reviews and makes recommendations for approval/disapproval of contract-related documents such as: pre- and post-award documents, unauthorized commitments, procurement planning documents, Justification for Other Than Full and Open Competition waivers, deviations, and determinations and findings that require action by the Agency Head of Contracting activity, or the Office of the Secretary; (9) processes unsolicited proposals for the IHS; (10) coordinates the IHS Small Business programs; and (11) oversees compliance with the Buy Indian Act.

Division of Grants Operations (DGO) (GALD)

(1) Directs grants management and operations for the IHS; (2) awards and administers grants and cooperative agreements for IHS financial assistance programs; (3) provides assistance for the resolution of audit findings for grant programs; (4) manages for the Agency, the HHS grants training and certification program; (5) assesses continuously grants operations; (6) oversees completion of necessary corrective action plans; (7) reviews and makes recommendations for improvements in grantee and potential grantee management systems; (8) serves as the IHS liaison with the HHS and the public for grants and other financial assistance programs with the IHS; (9) maintains the Catalog of Federal Domestic Assistance for IHS financial assistance programs; (10) conducts grants-related training for IHS staff, grantees, and potential grantees; (11) coordinates payment to grants, including scholarship recipients; and (12) establishes and maintains the IHS automated Grants Information System and controls data entry into the HHS automated Grants Information System.

Division of Regulatory Affairs (GALE)

(1) Manages the IHS's overall regulations program and responsibilities, including determining the need for and developing plans for changes in regulations, developing or assuring the development of needed regulations, and maintaining the various regulatory planning processes; (2) serves as IHS liaison with the Office of the Federal Register on matters relating to the submission and clearance of documents for publication in the Federal Register; (3) assures proper Agency clearance and processing of **Federal Register** documents; (4) informs management and program officials of regulatory activities of other Federal agencies; (5) manages the IHS review of non-IHS regulatory documents that impact the delivery of health services to Indians; (6) advises the IHS Director and serves as liaison with the Office of the General Counsel (OGC) on such matters as litigation, regulations, related policy issues, and administrative support issues; (7) determines the need for and obtains legal clearance of IHS directives and other issuances; (8) coordinates legal issues with the OGC, IHS, HHS components, and other Federal agencies, including the identification and formulation of legal questions and advising on the implementation of OGC opinions; (9) assures that IHS appeals processes meet legal standards; (10) advises on and participates in Indian Self-Determination and Education Assistance Act appeals and hearings; (11) provides guidance and assistance on State and Federal health reform efforts, including access and civil rights aspects and State Medicaid waiver applications; (12) advises on the administration of the contract health services (CHS) appeals system and is a participant in the IHS Director's CHS appeal decisions; (13) manages the retrieval and transmittal of information in response to requests received under the FOIA or the Privacy Act, in collaboration with the Public Affairs Staff; (14) ensures the security of sensitive and/or confidential information when responding to FOIA or Privacy Act issues; and (15) advises the IHS Director regarding requests for IHS employees to serve as expert witnesses when IHS is not a party to the suit.

Regulations and Records Access Branch (RRAB)

(1) Manages the Agency's regulation program and responsibilities; (2) serves as liaison with the Office of the Federal Register; (3) advises on the need for or changes in current regulations; (4)

develops or assures the development of IHS regulations; (5) keeps IHS officials informed on relevant regulatory activities of other agencies of the Government; (6) coordinates regulations activities with agencies within the HHS that impact on the delivery of health services to Indians; (7) maintains and updates various regulatory agendas; (8) assures that all IHS materials for publication in the **Federal Register** are properly cleared, processed, and in proper format; (9) manages the retrieval, review, and appropriate transmittal of information in response to FOIA requests, including ensuring the appropriate security of such documents; (10) manages, administers, implements and monitors the Agency's Paperwork Reduction Act (PRA) and OMB information collection/activities; (11) provides guidance and technical assistance to IHS regarding information collection requirements and procedures for obtaining OMB approvals and extensions for IHS information collections; and (12) coordinates the implementation and the application of Privacy Act requirements, including but not limited to Health Insurance Portability and Accountability Act implementation and compliance.

Policy Liaison Branch (PLB)

(1) Coordinates the resolution and development of legal advice to the IHS Director on IHS legal issues with the OGC, IHS senior staff, and other Federal agencies; (2) provides liaison with the OGC in such matters as litigation, regulations, legislation, policy review, civil rights, and administrative appeals; (3) provides advice on the development and implementation of non-personnel appeals processes to assure they meet legal standards; (4) maintains and distributes the Compendium of Legal Opinions; (5) reviews IHS directives and other issuances for needed legal clearances; (6) advises on the impact on IHS and the Indian community of State and Federal health reforms; and (7) provides policy review and advice on the need for or application of legal opinions.

Division of Human Resources (DHR) (GALG)

(1) Provides overall leadership and direction for the IHS Human Resources (HR) program; (2) evaluates, establishes and implements HR policies for Agency-wide use and provides leadership to ensure implementation; (3) provides advice, consultation, guidance and assistance to the Director, IHS, on civil service HR issues, programs and policies; (4) provides leadership and direction to the IHS Regional HR Centers; (5) assures compliance with Indian Preference statutory and policy requirements in HR practices; (6) provides HR services throughout the IHS, to include, but not limited to, strategic human capital and workforce planning, succession planning, E-government HR initiatives, HR program evaluation and oversight, management advisory services, HR leadership, classification and pay administration, staffing and placement, personnel and payroll action processing, labor-management and employee relations, benefits administration, and performance management and recognition programs; (7) provides advice, consultation, and assistance to IHS management and when requested to Tribal officials on tribal health program HR issues; (8) provides HR services, to include technical support, guidance, and assistance to IHS Headquarters staff, Regional HR Centers and other organizations and customers; (9) plans, conducts and evaluates HR programs; (10) plans and implements HR responsibilities for IHS programs covered by the headquarters appointing authority; and (11) represents the IHS in matters involving HR program services and responsibilities.

Division of Human Resources, Regional Human Resource Centers

(1) Provides overall leadership and direction for the IHS Human Resources (HR) program within the established region; (2) administers HR policies and regulations and provides leadership to ensure implementation; (3) provides advice, consultation, guidance and assistance to Area Directors, management officials, employees and other customers on civil service HR issues, programs and policies; (4) provides leadership and direction to the Human Resource staff throughout the Region; (5) assures compliance with Indian Preference statutory and policy requirements in HR practices; (6) provides HR services throughout the region, to include, but not limited to, strategic human capital and workforce planning, succession planning, E-government HR initiatives and strategic planning, HR program evaluation and oversight; strategic consultation, management advisory services, HR leadership, classification and pay administration, staffing and placement, personnel and payroll action processing, labor-management and employee relations, benefits administration and performance management; (7) provides advice, consultation, and assistance to management and when requested to Tribal officials on tribal health program HR issues; (8) plans, administers and evaluates HR programs; (9) plans and implements HR responsibilities for IHS programs covered by the region's appointing authority; and (10) represents the region in matters involving HR program responsibilities.

Western Region (GALG1)
Northern Plains (GALG2)
Southwest Region (GALG3)
Navajo Region (GALG4)
Southeast Region (GALG5)

Office of Environmental Health and Engineering (OEHE) (GAM)

(1) Advises and supports the IHS Director on policy, budget formulation, and resource allocation regarding environmental health and engineering activities of IHS and Tribal facilities programs; (2) provides Agency-wide leadership and consultation to IHS, Tribal, and Urban Indian health programs on IHS goals, objectives, policies, standards, and priorities; (3) represents the IHS within the HHS and external organizations for purposes of liaison, professional collaboration, cooperative ventures, and advocacy; (4) serves as the primary source of technical advice for the IHS Director, Headquarters, Area Offices, Tribal, and Urban Indian health programs on the full scope of health care facilities construction and operations, sanitation facilities construction and management, environmental health services, environmental engineering, clinical engineering, and realty services management; (5) develops and recommends policies, administrative procedures and guidelines for Public Law 93–638 construction activities; (6) develops objectives, priorities, standards, and methodologies to conduct and evaluate environmental health, environmental engineering, and facilities engineering and management activities; (7) coordinates the formulation of the IHS Facilities appropriation budget request and responds to all inquiries about the budget request and programs funded by the IHS Facilities appropriation; (8) maintains needs-based and workload-based methodologies for equitable resource distribution for all funds appropriated under the IHS Facilities appropriation; (9) provides leadership, consultation, and staff development to assure functional, safe, and well-maintained health care facilities, a comprehensive environmental health program, and the availability of water, sewer, and solid waste facilities for Indian homes and communities; (10) coordinates the IHS OEHE responsibilities in responding to disasters and other emergency situations, in collaboration with the

Office of Clinical and Preventive Services; and (11) participates in cross-cutting issues and processes including, but not limited to emergency preparedness/security, budget formulation, self-determination issues, Tribal shares computations and resolution of audit findings as may be needed and appropriate.

Division of Sanitation Facilities Construction (DSFC) (GAMA)

(1) Develops, implements, and manages the environmental engineering programs, including the Sanitation Facilities Construction (SFC) program, and compliance activities associated with environmental protection and historic preservation legislation; (2) provides Agency-wide management assistance and special support/consultation to address special environmental public health problems for environmental engineering/construction activities, and for compliance with environmental legislation; (3) works closely with other Federal agencies to resolve environmental issues and maximize benefits to Tribes by coordinating program efforts; (4) develops, implements, and evaluates Agency program activities, objectives, policies, plans, guidelines, and standardized data systems for SFC activities; (5) consults with Tribal groups/organizations in the development and implementation of SFC policies and initiatives, and in the identification of sanitation needs; (6) maintains a national inventory of current Tribal sanitation facilities needs, and past and present projects to address those needs; and (7) allocates financial resources Agency-wide based on need and workload using the national data inventories, in collaboration with the OFA.

Division of Facilities Operations (DFO) (GAMB)

(1) Develops, implements, and manages the programs affecting health care facilities operations, including the routine maintenance and improvement, real property asset management, realty, facilities environmental, quarters, and clinical engineering programs; (2) develops, implements, monitors and evaluates Agency program activities, objectives, policies, plans, guidelines, and standardized data systems for health care facilities operations; (3) serves as the principal resource for coordination of facilities operations and provides consultation to IHS and the Tribes on health care facilities operations; (4) maintains real property asset leasing, and quarters management systems; (5) maintains clinical engineering management systems; (6) formulates financial resources allocation methodologies Agency-wide based on need and workload data; (7) maintains Agency-wide data on Federal and Tribal facilities for program budget justification; (8) develops and evaluates technical standards and guidelines for health care facilities operations; and (9) monitors the improvement, alternation, and repair of health care facilities.

Division of Facilities Planning and Construction (DFPC) (GAMC)

(1) Develops, implements, and manages the IHS Health Care Facilities Planning and Construction program, including the facilities planning process, facilities design process, facilities acquisition, and construction project management; (2) develops, implements, monitors, and evaluates Agency program activities, objectives, policies, plans, guidelines, and standardized data systems for health care facilities planning and construction; (3) develops and maintains construction priority systems, and with the Division of Engineering Services, develops project budget documents for the health care facilities construction program; (4) services as the principal resource in providing leadership, guidance, and coordination of health care facilities engineering activities for the IHS Headquarters, Area Offices, Tribal and Urban Indian health programs; (5) evaluates justifications for major improvement and alteration projects and other large scale construction activities; (6) develops and evaluates technical standards and guidelines for health care facilities construction.

Division of Environmental Health Services (DEHS) (GAMD)

(1) Develops, implements, and manages the IHS Environmental Health Services programs, including the Injury Prevention and Institutional Environmental Health programs; (2) serves as the primary source of technical and policy advice for IHS Headquarters and Area Offices on the full scope of environmental health issues and activities; (3) maintains relationships with other Federal agencies and Tribes to maximize responses to environmental health issues and maximize benefits to Tribes by coordinating program efforts; (4) provides leadership in identifying and articulating environmental health needs of AI/AN populations and support efforts to build Tribal capacity; (5) provides personnel support services and advocates for environmental health providers; (6) maintains, analyzes, make accessible, and publishes results from national databases; (7) manages resource allocation activities in accordance with established criteria based on workload; (8) develops and evaluates standards and guidelines for environmental health programs and activities; and (9) performs functions related to environmental health programs such as injury prevention, emergency response, water quality, food sanitation, occupational health and safety, solid and hazardous waste management, environmental health issues in health care and non-health care institutions, and vector control.

Division of Engineering Services (Dallas/Seattle) (DES) (GAME)

(1) Administers all IHS new health care facilities engineering and construction projects and some repair and improvement construction projects for specified Area Offices and administers the engineering and construction of certain projects for other Federal agencies through inter-agency agreements, as negotiated; (2) carries out management activities relating to IHS-owned and utilized health care facilities, including construction, contracting, realty, and leasing services; (3) serves as the source of engineering and contracting expertise for assigned programs/projects and other technical programmatic areas affecting the planning, design, alteration, leasing, and construction of IHS health care and sanitation facilities for Indian homes and communities; (4) assists in the development of Area Office annual work plans, studies, investigations, surveys, audits, facilities planning, and technical standards development, for IHS-owned and Tribal health care facilities; and (5) designated as the IHS authority having jurisdiction for all code interpretations required to resolve conflicts that arise from interpreting and applying various codes and other related criteria in all IHS facilities and design/construction projects.

Section GA–30, Indian Health Service—Order of Succession

During my absence or disability of the IHS Director or in the event of a vacancy in that office, the following IHS Headquarters officials, in the order listed below, shall act as the IHS Director. In the event of a planned extended period of absence, the IHS Director may specify a different order of succession. The order of succession will be:

(1) Deputy Director

(2) Deputy Director for Indian Health Policy

(3) Deputy Director for Management Operations

(4) Chief Medical Officer

Section GA–40, Indian Health Service—Delegations of Authority

All delegations of authority and re-delegations of authority made to IHS officials that were in effect immediately prior to this reorganization, and that are consistent with this reorganization, shall continue in effect pending further re-delegation.

Chapter GF—IHS Area Offices

Section GF–00, Indian Health Service Area Offices—Mission

The IHS Area Offices carry out the mission of the IHS by providing a system of health care unique to the Area population.

Section GF–10, Indian Health Service Area Offices—Organization

An Area Office is a second echelon organization under the direction of an Area Director, who reports to the IHS Director.

The following are the Area Offices of the IHS:

Aberdeen Area Office (GFA); Alaska Area Office (GFB); Albuquerque Area Office (GFC); Bemidji Area Office (GFE); Billings Area Office (GFF); California Area Office (GFG); Nashville Area Office (GFH); Navajo Area Office (GFJ); Oklahoma City Area Office (GFK); Phoenix Area Office (GFL); Portland Area Office (GFM); and Tucson Area Office (GFN).

Section GF–20, Indian Health Service Area Offices—Functions

The specific functions of the IHS Area Offices vary, however, each Area Office includes functions organized to support major categories of administrative management and clinical activities. Examples include:

Administration and Management—Financial management, administrative and office services, contract/grant administration, procurement, personnel management, facilities management, management information systems, contract health services, and equal employment opportunity;

Program Planning, Analysis and Evaluation Programs—Program planning, statistical analysis, legislative initiatives, research and evaluation, health records, management information systems, and patient registration/third party collection;

Tribal Activity Programs—Provision of Pub. L. 93–638, Indian Self-Determination and Education Assistance Act, health services delivery, community health representative services, Urban Indian health, alcoholism and substance abuse, and health education;

Health Programs—Primary care, clinical activities, mental health, nursing services, health promotion, disease prevention, professional recruitment, community services, and the Joint Commission on Accreditation of Healthcare Organizations;

Environmental Health/Sanitation Facilities Programs—Environmental health and engineering/sanitation facilities construction programs; and

Information Resources Management Programs—Automated data processing (ADP), ADP planning and operations, management information systems, office automation systems, and voice/data telecommunications management.

Section GF–30, Indian Health Service Area Offices—Order of Succession

The order of succession for Area Directors at the IHS Area Offices is determined by each Area Director and continues in effect until changed.

Section GF–40, Indian Health Service Area Offices—Delegations of Authority

All delegations and re-delegations of authority made to officials in the IHS Area Offices that were in effect immediately prior to this reorganization, and that are consistent with this reorganization, shall continue in effect pending further re-delegation.

This reorganization shall be effective on October 17, 2005.

Dated: October 5, 2005.

Robert G. McSwain,

Deputy Director, Indian Health Service.

[FR Doc. 05–20584 Filed 10–14–05; 8:45 am]

BILLING CODE 4165–16–M

DEPARTMENT OF HOMELAND SECURITY

Customs and Border Protection

Quarterly IRS Interest Rates Used in Calculating Interest on Overdue Accounts and Refunds on Customs Duties

AGENCY: Customs and Border Protection, Department of Homeland Security.

ACTION: General notice.

SUMMARY: This notice advises the public of the quarterly Internal Revenue Service interest rates used to calculate interest on overdue accounts (underpayments) and refunds (overpayments) of customs duties. For the calendar quarter beginning October 1, 2005, the interest rates for overpayments will be 6 percent for corporations and 7 percent for non-corporations, and the interest rate for underpayments will be 7 percent. This notice is published for the convenience of the importing public and Customs and Border Protection personnel.

EFFECTIVE DATES: October 1, 2005.

FOR FURTHER INFORMATION CONTACT: Trong Quan, National Finance Center, Collections Section, 6026 Lakeside Boulevard, Indianapolis, Indiana 46278; telephone (317) 614–4516.

SUPPLEMENTARY INFORMATION:

Background

Pursuant to 19 U.S.C. 1505 and Treasury Decision 85–93, published in the **Federal Register** on May 29, 1985 (50 FR 21832), the interest rate paid on applicable overpayments or underpayments of customs duties must be in accordance with the Internal Revenue Code rate established under 26 U.S.C. 6621 and 6622. Section 6621 was amended (at paragraph (a)(1)(B) by the Internal Revenue Service Restructuring and Reform Act of 1998, Pub. L. 105–206, 112 Stat. 685) to provide different interest rates applicable to overpayments: one for corporations and one for non-corporations.

The interest rates are based on the Federal short-term rate and determined by the Internal Revenue Service (IRS) on behalf of the Secretary of the Treasury on a quarterly basis. The rates effective for a quarter are determined during the first-month period of the previous quarter.

In Revenue Ruling 2005–62, the IRS determined the rates of interest for the calendar quarter beginning October 1, 2005, and ending December 31, 2005. The interest rate paid to the Treasury for underpayments will be the Federal short-term rate (4%) plus three percentage points (3%) for a total of seven percent (7%). For corporate overpayments, the rate is the Federal short-term rate (4%) plus two percentage points (2%) for a total of six percent (6%). For overpayments made by non-corporations, the rate is the Federal short-term rate (4%) plus three percentage points (3%) for a total of seven percent (7%). These interest rates are subject to change for the calendar quarter beginning January 1, 2005, and ending March 31, 2005.

For the convenience of the importing public and Customs and Border Protection personnel the following list of IRS interest rates used, covering the period from before July of 1974 to date, to calculate interest on overdue accounts and refunds of customs duties, is published in summary format.

Beginning date	Ending date	Underpayments (percent)	Overpayments (percent)	Corporate overpayments (Eff. 1–1–99) (percent)
070174	063075	6	6	
070175	013176	9	9	
020176	013178	7	7	
020178	013180	6	6	
020180	013182	12	12	
020182	123182	20	20	
010183	063083	16	16	
070183	123184	11	11	
010185	063085	13	13	
070185	123185	11	11	
010186	063086	10	10	
070186	123186	9	9	
010187	093087	9	8	
100187	123187	10	9	
010188	033188	11	10	
040188	093088	10	9	
100188	033189	11	10	
040189	093089	12	11	
100189	033191	11	10	
040191	123191	10	9	
010192	033192	9	8	
040192	093092	8	7	
100192	063094	7	6	
070194	093094	8	7	
100194	033195	9	8	
040195	063095	10	9	
070195	033196	9	8	
040196	063096	8	7	
070196	033198	9	8	
040198	123198	8	7	
010199	033199	7	7	6
040199	033100	8	8	7
040100	033101	9	9	8
040101	063001	8	8	7
070101	123101	7	7	6
010102	123102	6	6	5
010103	093003	5	5	4
100103	033104	4	4	3
040104	063004	5	5	4
070104	093004	4	4	3
100104	033105	5	5	4
040105	093005	6	6	5
100105	123105	7	7	6

Dated: October 11, 2005.

Robert C. Bonner,

Commissioner, Customs and Border Protection.

[FR Doc. 05–20649 Filed 10–14–05; 8:45 am]

BILLING CODE 9110–06–P

DEPARTMENT OF HOUSING AND URBAN DEVELOPMENT

[Docket No. FR–4971–N–53]

Notice of Submission of Proposed Information Collection to OMB; Construction Complaint-Request for Financial Assistance

AGENCY: Office of the Chief Information Officer, HUD.

ACTION: Notice.

SUMMARY: The proposed information collection requirement described below has been submitted to the Office of Management and Budget (OMB) for review, as required by the Paperwork Reduction Act. The Department is soliciting public comments on the subject proposal.

The information collection is submitted by homeowners and is used by HUD to identify the items of complaint in order to help the homeowner obtain correction. The information is also used to identify builders not conforming to applicable standards and to determine eligibility for financial assistance.

DATES: *Comments Due Date:* November 16, 2005.

ADDRESSES: Interested persons are invited to submit comments regarding this proposal. Comments should refer to the proposal by name and/or OMB approval number (2502–0047) and should be sent to: HUD Desk Officer, Office of Management and Budget, New Executive Office Building, Washington, DC 20503; fax: 202–395–6974.

FOR FURTHER INFORMATION CONTACT: Wayne Eddins, Reports Management Officer, AYO, Department of Housing and Urban Development, 451 Seventh Street, SW., Washington, DC 20410; e-mail *Wayne_Eddins@HUD.gov;* or Lillian Deitzer at *Lillian_L_Deitzer@HUD.gov* or telephone (202) 708–2374. This is not a toll-free number. Copies of available documents submitted to OMB may be obtained from Mr. Eddins or Ms Deitzer or from HUD's Web site at *http://hlannwp031.hud.gov/po/i/icbts/collectionsearch.cfm.*

SUPPLEMENTARY INFORMATION: This notice informs the public that the Department of Housing and Urban Development has submitted to OMB a request for approval of the information collection described below. This notice is soliciting comments from members of

the public and affecting agencies concerning the proposed collection of information to: (1) Evaluate whether the proposed collection of information is necessary for the proper performance of the functions of the agency, including whether the information will have practical utility; (2) Evaluate the accuracy of the agency's estimate of the burden of the proposed collection of information; (3) Enhance the quality, utility, and clarity of the information to be collected; and (4) Minimize the burden of the collection of information on those who are to respond; including through the use of appropriate automated collection techniques or other forms of information technology, *e.g.*, permitting electronic submission of responses.

This notice also lists the following information:

Title of Proposal: Construction Complaint-Request for Financial Assistance.

OMB Approval Number: 2502–0047.

Form Numbers: HUD–92556.

Description of the Need for the Information and Its Proposed Use: The information collection is submitted by homeowners and is used by HUD to identify the items of complaint in order to help the homeowner obtain correction. The information is also used to identify builders not conforming to applicable standards and to determine eligibility for financial assistance.

Frequency of Submission: On occasion.

	Number of respondents	×	Annual responses	×	Hours per response	=	Burden hours
Reporting burden	10		1		0.5		5

Total Estimated Burden Hours: 5.

Status: Extension of a currently approved collection.

Authority: Section 3507 of the Paperwork Reduction Act of 1995, 44 U.S.C. 35, as amended.

Dated: October 6, 2005.

Wayne Eddins,

Departmental Paperwork Reduction Act Officer, Office of the Chief Information Officer.

[FR Doc. 05–20645 Filed 10–14–05; 8:45 am]

BILLING CODE 4210–72–P

DEPARTMENT OF THE INTERIOR

Fish and Wildlife Service

Draft Comprehensive Conservation Plan and Environmental Impact Statement for Crab Orchard National Wildlife Refuge (NWR), Williamson, Jackson, and Union Counties, IL

AGENCY: Fish and Wildlife Service, Interior.

ACTION: Notice of availability.

SUMMARY: The Fish and Wildlife Service announces that the Draft Comprehensive Conservation Plan (CCP) and Environmental Impact Statement (EIS) is available for Crab Orchard NWR, Illinois.

The CCP/EIS was prepared pursuant to the National Wildlife Refuge System Administration Act of 1996, as amended by the National Wildlife Refuge System Improvement Act of 1997, and the National Environmental Policy Act of 1969. Goals and Objectives in the CCP describe how the agency intends to manage the refuge over the next 15 years.

DATES: Comments on the Draft CCP/EIS must be received on or before January 17, 2006.

ADDRESSES: Copies of the Draft CCP/EIS are available on compact disk or hard copy, you may obtain a copy by writing to: Fish and Wildlife Service, Division of Conservation Planning, Bishop Henry Whipple Federal Building, 1 Federal Drive, Fort Snelling, Minnesota 55111 or you may access and download a copy via the planning Web site at *http://www.fws.gov/midwest/planning/craborchard/index.html.*

All comments should be addressed to Crab Orchard National Wildlife Refuge, Attention: CCP Comment, 8588 Route 148, Marion, IL 62959, or direct e-mail to *r3planning@fws.gov.* Comments may also be submitted through the Service's regional Web site at *http://www.fws.gov/midwest/planning.*

FOR FURTHER INFORMATION CONTACT: Dan Frisk at 618/997–3344.

SUPPLEMENTARY INFORMATION: Located in southern Illinois and consisting of 43,888 acres, Crab Orchard NWR was established in 1947. In late 2000 we asked citizens for their ideas on what the comprehensive conservation plan should include and the issues that should be addressed. We gave citizens the opportunity to comment at open houses and through written comments. In three meetings early in 2001, we asked a diverse group of stakeholders to identify and prioritize issues facing the Refuge.

Five alternative approaches to management, including a Preferred Alternative and a No Action (Current Management) Alternative, were considered for Crab Orchard National Wildlife Refuge. The five alternatives are described and evaluated in the Draft EIS. All alternatives would achieve the Refuge's purposes of wildlife conservation, agriculture, recreation, and industry. Under all alternatives, group camps and most non-wildlife dependent recreation would remain; technical rock climbing would be prohibited; a modified recreational fee structure would be implemented; a 14-day camping limit would be instituted; management of sport fish populations would continue; use of prescribed fire would increase; and the agricultural acres would not change by more than 5 percent. All alternatives would maintain food required for wintering Canada geese. Alternative A would continue the present course of management. Alternative B would reduce habitat fragmentation and emphasize wildlife-dependent recreation. A land exchange with Southern Illinois University would be a significant part of this alternative. Alternative C would emphasize management of open lands and consolidate and improve recreation facilities. Alternative D would emphasize management of forest lands and consolidate and improve recreation facilities. Alternative E, the preferred alternative, would reduce habitat fragmentation and consolidate and improve recreation facilities. Conflicts among water users would be addressed by increasing areas designated as no-wake zones and better enforcement of current use zoning regulations. The quality of campgrounds and marinas would be increased by consolidating and improving them. The agricultural program would remain largely as is and its economic effect continues. The industrial program would continue to support the munitions manufacturing industry. By encouraging other industries to locate in nearby industrial parks, the economic effect of the industry would remain in the local economy, and the needs of the industry would be met more efficiently. Increased efforts would be made to talk with and listen to the community.

The National Wildlife Refuge System Administration Act of 1966, as amended by the National Wildlife Refuge System

Improvement Act of 1997 (16 U.S.C. 668dd–668ee *et seq.*), requires the Service to develop a CCP for each National Wildlife Refuge. The purpose in developing a CCP is to provide refuge managers with a 15-year strategy for achieving refuge purposes and contributing toward the mission of the National Wildlife Refuge System, consistent with sound principles of fish and wildlife management, conservation, legal mandates, and Service policies. In addition to outlining broad management direction for conserving wildlife and their habitats, the CCP identifies wildlife-dependent recreational opportunities available to the public, including opportunities for hunting, fishing, wildlife observation and photography, and environmental education and interpretation. We will review and update these CCPs at least every 15 years in accordance with the National Wildlife Refuge System Administration Act of 1966, as amended by the National Wildlife Refuge System Improvement Act of 1997, and the National Environmental Policy Act of 1969 (42 U.S.C. 4321–4370d).

Dated: August 16, 2005.

Robyn Thorson,

Regional Director, Region 3, Fish and Wildlife Service, Ft. Snelling, Minnesota.

[FR Doc. 05–20684 Filed 10–14–05; 8:45 am]

BILLING CODE 4310–55–M

DEPARTMENT OF THE INTERIOR

Fish and Wildlife Service

Notice of Intent to Prepare a Comprehensive Conservation Plan and Environmental Assessment for Prime Hook National Wildlife Refuge

AGENCY: Fish and Wildlife Service, Department of the Interior.

ACTION: Notice of intent.

SUMMARY: The Fish and Wildlife Service (Service) is preparing a Comprehensive Conservation Plan (CCP) and Environmental Assessment (EA) document for Prime Hook National Wildlife Refuge (NWR). This notice advises the public that the Service intends to gather information necessary to prepare a CCP and an EA pursuant to the National Wildlife Refuge System Administration Act of 1966, as amended, and the National Environmental Policy Act. The public is invited to participate in the planning process. The Service is furnishing this notice in compliance with the Service's CCP policy to:

1. Advise other agencies and the public of our intentions; and

2. Obtain suggestions and information on the scope of issues to include in the environmental documents.

The Service will solicit information from the public via open houses, meetings, and written comments. Special mailings, newspaper articles, refuge Web site postings, and announcements will provide information regarding opportunities for public involvement in the planning process. The first public meetings are scheduled for the week of November 7, 2005.

DATES: Please provide written comments to the address below by December 1, 2005.

Send Comments To: Thomas Bonetti, Refuge Planner, Fish and Wildlife Service, 300 Westgate Center Drive, Hadley, Massachusetts, 01035. Additional information is available on the refuge Web site at: *http://primehook.fws.gov.*

FOR FURTHER INFORMATION CONTACT: Thomas Bonetti, Refuge Planner, U.S. Fish and Wildlife Service, 300 Westgate Center Drive, Hadley, Massachusetts, 01035, 413–253–8307; or e-mail *northeastplanning@fws.gov.*

SUPPLEMENTARY INFORMATION: In accordance with the National Wildlife Refuge System Administration Act of 1966, as amended by the National Wildlife Refuge System Improvement Act of 1997 (16 U.S.C. 668dd–668ee), the Service is to manage all lands within the National Wildlife Refuge System in accordance with an approved CCP. The plan guides management decisions and identifies refuge goals, long-range objectives, and strategies for achieving refuge purposes. The planning process will consider many elements, including wildlife and habitat management, public recreational activities such as hunting and fishing, and cultural resource protection. Public input into the planning process is essential.

The CCP will provide other agencies and the public with information regarding the future desired conditions for the refuge and how the Service will implement management strategies. The Service will prepare an EA in accordance with procedures for implementing the National Environmental Policy Act of 1969 (42 U.S.C. 4321–4370d). Concurrent with the CCP process, the Service will conduct a wilderness review and incorporate a summary of the review into the CCP, as well as include compatibility determinations for all applicable refuge uses.

In 1963, Prime Hook NWR was established under the authority of the Migratory Bird Conservation Act for use as an inviolate sanctuary, or any other management purpose, expressly for migratory birds. Many farms and residences were once present on what is now the refuge. Prime Hook NWR was established primarily to preserve coastal wetlands as wintering and breeding habitat for migratory waterfowl. It is located on the west shore of Delaware Bay, 22 miles southeast of Dover, Delaware. Refuge habitat types are varied and are currently managed to maintain a diversity of wildlife species. Prime Hook NWR consists of over 9,700 acres, of which 7,400 acres are fresh marsh, tidal marsh, and open water. Other habitats include 1,000 acres of timber and brush and 1,300 acres of grasslands and croplands. Data collection has been initiated to create computerized mapping, including vegetation, topography, habitat types and existing land uses.

Comments received will be used to help identify key issues and to develop refuge goals, habitat management and visitor services strategies. Additional opportunities for public participation will occur throughout the planning process, which is expected to be completed in 2008. The outcome of this planning process will be a CCP to guide refuge management for the next 15 years.

Dated: September 21, 2005.

Richard O. Bennett,

Acting Regional Director, Fish and Wildlife Service, Hadley, Massachusetts.

[FR Doc. 05–20682 Filed 10–14–05; 8:45 am]

BILLING CODE 4310–55–P

DEPARTMENT OF THE INTERIOR

DEPARTMENT OF AGRICULTURE

[CA 668–05–1610–PG–083A]

Monument Advisory Committee Meeting Schedule for Fiscal Year 2006

AGENCY: Bureau of Land Management, U.S. Department of the Interior; and United States Forest Service, U.S. Department of Agriculture.

ACTION: Notice of meetings for FY06.

SUMMARY: The Bureau of Land Management (BLM) and United States Forest Service (USFS) announce the schedule for meetings of the Santa Rosa and San Jacinto Mountains National Monument Advisory Committee (hereinafter referred to as MAC), for fiscal year 2006.

All meetings begin at 9 a.m. and will be held in the Palm Desert City Council Conference Room, located at 73–510 Fred Waring Drive, Palm Desert California; and will begin at 9 a.m.

Meetings are scheduled for the following dates:

- Saturday, December 3, 2006.
- Saturday, March 4, 2006.
- Saturday, June 3, 2006.
- Saturday, September 9, 2006.
- Saturday, December 2, 2006.

Meeting agendas will be developed and available to the public prior to meeting dates through the Bureau of Land Management, Palm Springs-South Coast Field Office Web Page linking to the Santa Rosa San Jacinto Mountains National Monument Home Page at *http://www.ca.blm.gov/palmsprings/santarosa/santa_rosa_national_monument.html*.

The focus of all MAC meetings will be on implementation issues of the Santa Rosa and San Jacinto Mountains National Monument Management Plan. Each meeting, beginning at approximately 11 a.m., will contain a half-hour Public Comment period. During this time members of the public are encouraged to provide their comments and/or input to the MAC for further consideration and discussion. A sign-up sheet for speakers will be available at the entrance of the Palm Desert City Council Conference Room, on the day of the meeting. Speakers making comments to the Advisory Committee are requested to provide a written copy of their statement for the record.

The MAC is a committee of citizens appointed to provide advice and recommendation to the Secretaries of the Interior and Agriculture, with respect to implementation of the National Monument Management Plan. The Santa Rosa and San Jacinto Mountains National Monument Act of 2000 (16 U.S.C. 106–351), authorized establishment of the MAC with representative members from State and local jurisdictions, the Agua Caliente Band of Cahuilla Indians, a natural science expert, a member from a local conservation organization, a representative of the local developers or building industry organization, the Winter Park Authority, and a representative from the Pinyon Community Council.

All of the meetings are open to the public, attendance limited only by the space available. Individuals attending who need special assistance, such as sign language interpretations, or other reasonable accommodations, should notify the contact person listed below two (2) weeks in advance of the meeting.

Meeting Dates and Times: December 3, 2005; March 4, 2006; June 3, 2006; September 9, 2006; December 2, 2006. All MAC meetings begin at 9 a.m., and the Public Comment period begins at approximately 11 a.m.

ADDRESSES: All MAC meetings are held in the Palm Desert City Council Conference Room, 73–510 Fred Waring Drive, Palm Desert, California 92260.

FOR FURTHER INFORMATION CONTACT: Written comments should be sent to the Santa Rosa San Jacinto Mountains National Monument Writer-Editor, in-care-of the Bureau of Land Management, P.O. Box 581260, North Palm Springs, CA 92258; by telephone 760 251–4800, fax (760) 251–4899; or e-mail *ca_srsj_nm@ca.blm.gov*.

Additional information regarding the National Monument and the MAC is posted on the National Monument Web pages located at: *http://www.ca.blm.gov/palmsprings/santarosa/santa_rosa_national_monument.html*.

Documents pertinent to this notice, including comments with the names and addresses of respondents, will be available for public review at the BLM Palm Springs-South Coast Field Office located at 690 W. Garnet Avenue, North Palm Springs, California, during regular business hours 8 a.m. to 4:30 p.m., Monday through Friday, except for holidays.

SUPPLEMENTARY INFORMATION: The Santa Rosa and San Jacinto Mountains National Monument Act (Pub. L. 106–351) was signed into law on October 24, 2000, by President William Clinton. The National Monument was established in order to preserve the nationally significant biological, cultural, recreational, geological, educational and scientific values found in the Santa Rosa and San Jacinto Mountains. This legislation established the first National Monument to be jointly managed by the Bureau of Land Management (BLM) and the U.S. Forest Service (USFS). This National Monument Act only affects Federal lands, and Federal interests located within the established National Monument boundaries.

The 272,000-acre National Monument encompasses 86,400 acres of Bureau of Land Management lands; 64,400 acres of Forest Service lands; 23,000 acres of Agua Caliente Band of Cahuilla Indians lands; 8,500 acres of California Department of Parks and Recreation lands; 35,800 acres of other State of California agencies lands; and 53,900 acres of privately owned lands.

The BLM and the Forest Service's joint management is done in consultation with the Agua Caliente Band of Cahuilla Indians, other Federal and State agencies; and local governments.

All MAC, work group, and any subcommittee meetings, including field examinations, are open to the public, including representatives of the media. Any organization, association, or individual may file a statement with, or appear before the committee and/or its work groups, and any subcommittees regarding topics on a meeting's agenda.

Dated: October 7, 2005.

Elena Misquez,

Bureau of Land Management, Palm Springs-South Coast, Acting Field Office Manager.

Dated: October 6, 2005.

Danella George,

Santa Rosa & San Jacinto Mountains, National Monument Manager.

Dated: October 5, 2005.

Laurie Rosenthal,

District Ranger, San Jacinto Ranger District, San Bernardino National Forest.

[FR Doc. 05–20686 Filed 10–14–05; 8:45 am]

BILLING CODE 4310–40–P

DEPARTMENT OF THE INTERIOR

Bureau of Land Management

[ID–200–1120–PH]

Notice of November Resource Advisory Council Meeting To Be Held in Twin Falls District, ID

AGENCY: Bureau of Land Management, Interior.

SUMMARY: This notice announces the intent to hold a Resource Advisory Council (RAC) meeting in the Twin Falls District of Idaho on Tuesday, November 29, 2005. The meeting will be held in the Cedar Conference Room at the Red Lion Canyon Springs Hotel, 1357 Blue Lakes Boulevard North, in Twin Falls, Idaho.

SUPPLEMENTARY INFORMATION: The Twin Falls District Resource Advisory Council consists of the standard fifteen members residing throughout south central Idaho. Meeting agenda items will include multiple sub-group reports concerning energy, Blaine County Airport Relocation, and ongoing litigation. A significant portion of the session will also include familiarization for new incoming members. Other potential topics may also arise and a public comment period will be held following lunch.

FOR FURTHER INFORMATION CONTACT: Sky Buffat, Twin Falls District, Idaho, 2536 Kimberly Road, Twin Falls, Idaho, 83301, (208) 735–2068.

Dated: October 11, 2005.

Howard Hedrick,

Twin Falls District Manager.

[FR Doc. 05–20688 Filed 10–14–05; 8:45 am]

BILLING CODE 4310–GG–M

DEPARTMENT OF THE INTERIOR

Bureau of Land Management

[NV–930–1430–ET; NVN–80465; 5–08807]

Notice of Proposed Withdrawal and Opportunity for Public Meeting; Nevada

AGENCY: Bureau of Land Management, Interior.

ACTION: Notice.

SUMMARY: The Secretary of the Interior proposes to withdraw 3,009.11 acres of public land in Humboldt County, Nevada, to protect the Winnemucca Municipal Watershed and the Water Canyon Recreation Area. To the extent specified below, this notice segregates from surface entry and mining for up to 2 years, the aforementioned land.

DATES: Comments and requests for a public meeting must be received by January 17, 2006.

ADDRESSES: Comments and meeting requests should be sent to the Nevada State Director, BLM, P.O. Box 12000, Reno, Nevada 89520–0006.

FOR FURTHER INFORMATION CONTACT: Dennis J. Samuelson, BLM Nevada State Office, 775–861–6532.

SUPPLEMENTARY INFORMATION: The applicant is the Bureau of Land Management (BLM) at the address stated above. The petition/application requests the Secretary of the Interior to withdraw, for a period of 20 years and subject to valid existing rights, the following described public land from settlement, sale, location or entry under the general land laws, including mining laws, but not the mineral leasing laws:

Mount Diablo Meridian

T. 35 N., R. 38 E.,
sec. 2, lot 7, S½SE¼ and SE¼ SW¼;
secs. 11 and 12;
sec. 13, lots 1 and 2, W½NE¼, and NW¼;
sec. 14, N½.
T. 35 N., R. 39 E.,
sec. 18;
sec. 20, W½.

The area described contains 3,009.11 acres in Humboldt County.

The BLM petition/application has been approved by the Assistant Secretary, Land and Minerals Management. Therefore, it constitutes a withdrawal proposal of the Secretary of the Interior (43 CFR 2310.1–3(e)).

The use of a right-of-way, interagency agreement, or cooperative agreement would not adequately constrain non-discretionary uses that could irrevocably affect adversely the integrity of the municipal watershed and recreation area.

There are no suitable alternative sites, since the lands described contain the resources that need protection.

No water rights will be needed to fulfill the purpose of the withdrawal.

Possible mineral deposits present in the above described land areas include some locatable and salable minerals. No critical or strategic minerals, as defined by the Secretary of the Interior, are present in these areas.

The purpose of the proposed withdrawal is protection of the municipal watershed for the City of Winnemucca and a developed recreation area.

For a period of 90 days from the date of publication of this notice, all persons who wish to submit comments, suggestions, or objections in connection with the proposed withdrawal may present their views in writing to the BLM Nevada State Director.

Comments including names and street addresses of respondents, will be available for public review at the Winnemucca Field Office, 5100 East Winnemucca Boulevard, Winnemucca, Nevada, during regular business hours, 7:30 a.m. to 4:30 p.m., Monday through Friday, except holidays. Individual respondents may request confidentiality. If you wish to withhold your name or address from public review or from disclosure under the Freedom of Information Act, you must state this prominently at the beginning of your comments. Such requests will be honored to the extent allowed by the law. All submissions from organizations or businesses, and from individuals identifying themselves as representatives or officials of organizations or businesses, will be made available for public inspection in their entirety.

Notice is hereby given that an opportunity for a public meeting is afforded in connection with the proposed withdrawal. All interested persons who desire a public meeting for the purpose of being heard on the proposed withdrawal must submit a written request no later than January 17, 2006. Upon determination by the authorized officer that a public meeting will be held, a notice of the time, place, and date will be published in the **Federal Register** and a local newspaper at least 30 days before the scheduled date of the meeting.

This withdrawal proposal will be processed in accordance with the regulations set forth in 43 CFR 2300.

For a period of 2 years from the date of publication of this notice in the **Federal Register**, the land will be segregated as specified above unless the application is denied or cancelled or the withdrawal is approved prior to that date.

Licenses, permits, cooperative agreements, or discretionary land use authorizations of a temporary nature which will not significantly impact the values to be protected by the withdrawal may be allowed with the approval of the authorized officer of the BLM during the segregative period.

(Authority: 43 CFR 2310.3–1(a)).

Dated: October 4, 2005.

Margaret L. Jensen,

Deputy State Director, Natural Resources, Lands, and Planning.

[FR Doc. 05–20683 Filed 10–14–05; 8:45 am]

BILLING CODE 4310–HC–P

INTERNATIONAL TRADE COMMISSION

[Investigation Nos. 701–TA–253 and 731–TA–132, 252, 271, 273, 409, 410, 532–534, and 536 (Second Review)]

Certain Pipe and Tube From Argentina, Brazil, India, Korea, Mexico, Taiwan, Thailand, and Turkey

AGENCY: International Trade Commission.

ACTION: Notice of Commission determination to conduct full five-year reviews concerning the countervailing duty and antidumping duty orders on certain pipe and tube from Argentina, Brazil, India, Korea, Mexico, Taiwan, Thailand, and Turkey.

SUMMARY: The Commission hereby gives notice that it will proceed with full reviews pursuant to section 751(c)(5) of the Tariff Act of 1930 (19 U.S.C. § 1675(c)(5)) to determine whether revocation of the countervailing duty and antidumping duty orders on certain pipe and tube from Argentina, Brazil, India, Korea, Mexico, Taiwan, Thailand, and Turkey would be likely to lead to continuation or recurrence of material injury within a reasonably foreseeable time. A schedule for the reviews will be established and announced at a later date. For further information concerning the conduct of these reviews and rules of general application, consult the Commission's Rules of Practice and Procedure, part 201, subparts A through E (19 CFR part 201), and part 207, subparts A, D, E, and F (19 CFR part 207).

EFFECTIVE DATES: October 4, 2005.

FOR FURTHER INFORMATION CONTACT: Elizabeth Haines (202–205–3200), Office of Investigations, U.S. International Trade Commission, 500 E Street SW., Washington, DC 20436. Hearing-

impaired persons can obtain information on this matter by contacting the Commission's TDD terminal on 202–205–1810. Persons with mobility impairments who will need special assistance in gaining access to the Commission should contact the Office of the Secretary at 202–205–2000. General information concerning the Commission may also be obtained by accessing its internet server (*http://www.usitc.gov*). The public record for these reviews may be viewed on the Commission's electronic docket (EDIS) at *http://edis.usitc.gov.*

SUPPLEMENTARY INFORMATION: On October 4, 2005, the Commission determined that it should proceed to full reviews in the subject five-year reviews pursuant to section 751(c)(5) of the Act.[1] The Commission found that the domestic interested party group response to its notice of institution (70 F.R. 38204, July 1, 2005) was adequate. The Commission found that the respondent interested party group responses with respect to the orders on welded carbon steel pipe and tube from Turkey and circular welded nonalloy steel pipe from Mexico were adequate, but found that the respondent interested party group responses with respect to the orders on welded carbon steel pipe and tube from Thailand and India, small diameter carbon steel pipe and tube from Taiwan, circular welded nonalloy steel pipe from Brazil, Korea, and Taiwan, and light-walled rectangular pipe and tube from Argentina and Taiwan were inadequate. However, the Commission determined to conduct full reviews concerning all orders for which the respondent interested party group response was inadequate to promote administrative efficiency in light of its decision to conduct full reviews with respect to the orders on subject imports from Mexico and Turkey. A record of the Commissioners' votes, the Commission's statement on adequacy, and any individual Commissioner's statements will be available from the Office of the Secretary and at the Commission's Web site.

Authority: These reviews are being conducted under authority of title VII of the Tariff Act of 1930; this notice is published pursuant to section 207.62 of the Commission's rules.

Issued: October 11, 2005.

[1] Vice Chairman Deanna Tanner Okun and Commissioners Jennifer A. Hillman and Daniel R. Pearson dissenting with respect to light-walled rectangular pipe and tube from Argentina and Taiwan, for which they voted to conduct expedited reviews.

By order of the Commission.

Marilyn R. Abbott,

Secretary to the Commission.

[FR Doc. 05–20670 Filed 10–14–05; 8:45 am]

BILLING CODE 4410–11–P

INTERNATIONAL TRADE COMMISSION

[Investigation No. 731–TA–539–C (Second Review)]

Uranium From Russia

AGENCY: International Trade Commission.

ACTION: Notice of Commission determination to conduct a full five-year review concerning the suspended investigation on uranium from Russia.

SUMMARY: The Commission hereby gives notice that it will proceed with a full review pursuant to section 751(c)(5) of the Tariff Act of 1930 (19 U.S.C. 1675(c)(5)) to determine whether termination of the suspended investigation on uranium from Russia would be likely to lead to continuation or recurrence of material injury within a reasonably foreseeable time. A schedule for the review will be established and announced at a later date. For further information concerning the conduct of this review and rules of general application, consult the Commission's Rules of Practice and Procedure, part 201, subparts A through E (19 CFR part 201), and part 207, subparts A, D, E, and F (19 CFR part 207).

EFFECTIVE DATES: October 4, 2005.

FOR FURTHER INFORMATION CONTACT: Elizabeth Haines (202–205–3200), Office of Investigations, U.S. International Trade Commission, 500 E Street SW., Washington, DC 20436. Hearing-impaired persons can obtain information on this matter by contacting the Commission's TDD terminal on 202–205–1810. Persons with mobility impairments who will need special assistance in gaining access to the Commission should contact the Office of the Secretary at 202–205–2000. General information concerning the Commission may also be obtained by accessing its internet server (*http://www.usitc.gov*). The public record for this review may be viewed on the Commission's electronic docket (EDIS) at *http://edis.usitc.gov.*

SUPPLEMENTARY INFORMATION: On October 4, 2005, the Commission determined that it should proceed to a full review in the subject five-year review pursuant to section 751(c)(5) of the Act.[1] The Commission found that the domestic interested party group response to its notice of institution (70 FR 38212, July 1, 2005) was adequate and the respondent interested party group response was inadequate. The Commission also found that other circumstances warranted conducting a full review. A record of the Commissioners' votes, the Commission's statement on adequacy, and any individual Commissioner's statements will be available from the Office of the Secretary and at the Commission's Web site.

Authority: This review is being conducted under authority of title VII of the Tariff Act of 1930; this notice is published pursuant to section 207.62 of the Commission's rules.

Issued: October 11, 2005.

By order of the Commission.

Marilyn R. Abbott,

Secretary to the Commission.

[FR Doc. 05–20671 Filed 10–14–05; 8:45 am]

BILLING CODE 4410–11–P

INTERNATIONAL TRADE COMMISSION

[USITC SE–05–033]

Sunshine Act Meeting

AGENCY HOLDING THE MEETING: International Trade Commission.

TIME AND DATE: October 18, 2005 at 11 a.m.

PLACE: Room 101, 500 E Street SW., Washington, DC 20436, Telephone: (202) 205–2000.

STATUS: Open to the public.

MATTERS TO BE CONSIDERED:

1. Agenda for future meetings: none
2. Minutes
3. Ratification List
4. Inv. Nos. 731–TA–308–310 and 520–521 (Second Review)(Carbon Steel Butt-Weld Pipe Fittings from Brazil, China, Japan, Taiwan, and Thailand)—briefing and vote. (The Commission is currently scheduled to transmit its determination and Commissioners' opinions to the Secretary of Commerce on or before October 31, 2005.)
5. Outstanding action jackets: none

In accordance with Commission policy, subject matter listed above, not disposed of at the scheduled meeting, may be carried over to the agenda of the following meeting.

Issued: October 11, 2005.

[1] Vice Chairman Deanna Tanner Okun did not participate in this determination.

By order of the Commission.

Marilyn R. Abbott,

Secretary to the Commission.

[FR Doc. 05–20791 Filed 10–13–05; 11:07 am]

BILLING CODE 7020–02–P

INTERNATIONAL TRADE COMMISSION

[USITC SE–05–034]

Sunshine Act Meeting

AGENCY HOLDING THE MEETING: International Trade Commission.

TIME AND DATE: October 19, 2005 at 11 a.m.

PLACE: Room 101, 500 E Street SW., Washington, DC 20436, Telephone: (202) 205–2000.

STATUS: Open to the public.

MATTERS TO BE CONSIDERED:

1. Agenda for future meetings: none
2. Minutes
3. Ratification List
4. Inv. No. 731–TA–718 (Second Review)(Glycine from China)—briefing and vote. (The Commission is currently scheduled to transmit its determination and Commissioners' opinions to the Secretary of Commerce on or before October 31, 2005.)
5. Outstanding action jackets: none

In accordance with Commission policy, subject matter listed above, not disposed of at the scheduled meeting, may be carried over to the agenda of the following meeting.

Issued: October 11, 2005.

By order of the Commission.

Marilyn R. Abbott,

Secretary to the Commission.

[FR Doc. 05–20793 Filed 10–13–05; 11:07 am]

BILLING CODE 7020–02–P

INTERNATIONAL TRADE COMMISSION

[USITC SE–05–035]

Sunshine Act Meeting

AGENCY HOLDING THE MEETING: United States International Trade Commission.

TIME AND DATE: October 21, 2005 at 11 a.m.

PLACE: Room 101, 500 E Street SW., Washington, DC 20436, Telephone: (202) 205–2000.

STATUS: Open to the public.

MATTERS TO BE CONSIDERED:

1. Agenda for future meetings: none
2. Minutes
3. Ratification List
4. Inv. Nos. 701–TA–442–443 and 731–TA–1095–1097 (Preliminary) (Certain Line Paper School Supplies from China, India, and Indonesia)—briefing and vote. (The Commission is currently scheduled to transmit its determination to the Secretary of Commerce on or before October 24, 2005; Commissioners' opinions are currently scheduled to be transmitted to the Secretary of Commerce on or before October 31, 2005.)
5. Outstanding action jackets: none

In accordance with Commission policy, subject matter listed above, not disposed of at the scheduled meeting, may be carried over to the agenda of the following meeting.

Issued: October 11, 2005.

By order of the Commission:

Marilyn R. Abbott,

Secretary to the Commission.

[FR Doc. 05–20794 Filed 10–13–05; 11:07 am]

BILLING CODE 7020–02–P

DEPARTMENT OF JUSTICE

Antitrust Division

Notice Pursuant to the National Cooperative Research and Production Act of 1993—AAF Association, Inc.

Notice is hereby given that, on September 21, 2005, pursuant to Section 6(a) of the National Cooperative Research and Production Act of 1993, 15 U.S.C. 4301 *et seq.* (''the Act''), AAF Association, Inc. has filed written notifications simultaneously with the Attorney General and the Federal Trade Commission disclosing changes in its membership. The notifications were filed for the purpose of extending the Act's provisions limiting the recovery of antitrust plaintiffs to actual damages under specified circumstances. Specifically, Konan Technology, Inc., Seoul, Republic of Korea has been added as a party to this venture. Also, Korean Broadcasting System, Seoul, Republic of Korea; and Universitat Pompeau Fabra, Barcelona, Spain have withdrawn as parties to this venture.

No other changes have been made in either the membership or planned activity of the group research project. Membership in this group research project remains open, and AAF Association, Inc. intends to file additional written notification disclosing all changes in membership.

On March 28, 2000, AAF Association, Inc. filed its original notification pursuant to Section 6(a) of the Act. The Department of Justice published a notice in the **Federal Register** pursuant to Section 6(b) of the Act on June 29, 2000 (65 FR 40127).

The last notification was filed with the Department on June 15, 2005. A notice was published in the **Federal Register** pursuant to Section 6(b) of the Act on July 11, 2005 (70 FR 39796).

Dorothy B. Fountain,

Deputy Director of Operations, Antitrust Division.

[FR Doc. 05–20675 Filed 10–14–05; 8:45 am]

BILLING CODE 4410–11–M

DEPARTMENT OF JUSTICE

Antitrust Division

Notice Pursuant to the National Cooperative Research and Production Act of 1993—DVD Copy Control Association

Notice is hereby given that, on September 19, 2005, pursuant to Section 6(a) of the National Cooperative Research and Production Act of 1993, 15 U.S.C. 4301 *et seq.* (''the Act''), DVD Copy Control Association (''DVD CCA'') has filed written notifications simultaneously with the Attorney General and the Federal Trade Commission disclosing changes in its membership. The notifications were filed for the purpose of extending the Act's provisions limiting the recovery of antitrust plaintiffs to actual damages under specified circumstances. Specifically, Bontec Co., Ltd., Seoul, Republic of Korea; Cinea, Inc., Richmond, VA; C.K.C. Electronic Corp., Taipei Hsien, Taiwan; Clevo Co., Taipei, Taiwan; Compact Disc Technologies (Pty), Ltd., Gauteng, South Africa; Coretronic Corporation, Miao-Li County, Taiwan; DAT H.K. Limited, Hong Kong, Hong Kong-China; D&M Holdings Inc., Tokyo, Japan; DVD Club, Ltd., Moscow, Russia; Kenson-Optical, Ltd., Budapest, Hungary; KRCD India PVT, Ltd., Mumbai, India; Linpus Technologies, Inc., Taipei, Taiwan; Marubun/Arrow (HK) Limited, Hong Kong, Hong Kong-China; Marubun Corporation, Tokyo, Japan; Musical Electronics, Ltd., Hong Kong, Hong Kong-China; Shenzhen Jin Mei Wei Electron Co., Ltd., Shenzhen, People's Republic of China; TOMEN Electronics Corp., Tokyo, Japan; TOPAS Electronic GmbH, Hannover, Germany; Visteon Corporation, Van Buren, MI; and Zhongshan Dingcai AV Technology Co., Ltd., Zhongshan, People's Republic of China have been added as parties to this venture.

Also, Denon, Ltd., Kanagawa, Japan; Evatone, Inc., Clearwater, FL; Marantz Japan, Inc., Kanagawa, Japan; and Ulead

Systems, Inc., Taipei, Taiwan have withdrawn as parties to this venture.

No other changes have been made in either the membership or planned activity of the group research project. Membership in this group research project remains open, and DVD CCA intends to file additional written notification disclosing all changes in membership.

On April 11, 2001, DVD CCA filed its original notification pursuant to Section 6(a) of the Act. The Department of Justice published a notice in the **Federal Register** pursuant to Section 6(b) of the Act on August 3, 2001 (66 FR 40727).

The last notification was filed with the Department on June 27, 2005. A notice was published in the **Federal Register** pursuant to Section 6(b) of the Act on July 13, 2005 (70 FR 40399).

Dorothy B. Fountain,

Deputy Director of Operations, Antitrust Division.

[FR Doc. 05–20676 Filed 10–14–05; 8:45 am]

BILLING CODE 4410–11–M

DEPARTMENT OF JUSTICE

Antitrust Division

Notice Pursuant to the National Cooperative Research and Production Act of 1993—Petroleum Environmental Research Forum

Notice is hereby given that, on July 19, 2005, pursuant to Section 6(a) of the National Cooperative Research and Production Act of 1993, 15 U.S.C. 4301 *et seq.* (''the Act''), Petroleum Environmental Research Forum (''PERF'') has filed written notifications simultaneously with the Attorney General and the Federal Trade Commission disclosing changes in its membership. The notifications were filed for the purpose of extending the Act's provisions limiting the recovery of antitrust plaintiffs to actual damages under specified circumstances. Specifically, Suncor Energy Inc., Calgary, Alberta, Canada has been added as a party to this venture.

No other changes have been made in either the membership or planned activity of the group research project. Membership in this group research project remains open, and PERF intends to file additional written notification disclosing all changes in membership.

On February 10, 1986, PERF filed its original notification pursuant to Section 6(a) of the Act. The Department of Justice published a notice in the **Federal Register** pursuant to Section 6(b) of the Act on March 14, 1986 (51 FR 8903).

The last notification was filed with the Department on June 29, 2005. A notice was published in the **Federal Register** pursuant to Section 6(b) of the Act on July 18, 2005 (70 FR 41237).

Dorothy B. Fountain,

Deputy Director of Operations, Antitrust Division.

[FR Doc. 05–20674 Filed 10–14–05; 8:45 am]

BILLING CODE 4410–11–M

DEPARTMENT OF JUSTICE

Antitrust Division

Notice Pursuant to the National Cooperative Research and Production Act of 1993—Telemanagement Forum

Notice is hereby given that, on September 8, 2005, pursuant to Section 6(a) of the National Cooperative Research and Production Act of 1993, 15 U.S.C. 4301 *et seq.* (''the Act''), Telemanagement Forum (''the Forum'') has filed written notifications simultaneously with the Attorney General and the Federal Trade Commission disclosing changes in its membership. The notifications were filed for the purpose of extending the Act's provisions limiting the recovery of antitrust plaintiffs to actual damages under specified circumstances. Specifically, Advance Solutions, Riyadh, Saudi Arabia; Argent Networks Limited, Auckland, New Zealand; AutoMagic KB LLC, Denver, CO; BI Telecom, Moscow, Russia; Billing Services Group Europe, Buckden, United Kingdom; Bispro Consulting, Jakarta, Indonesia; BoomBoat Inc., Toronto, Ontario, Canada; Borland Corporation, Scotts Valley, CA; boxfusion, London, United Kingdom; Capgemini Telecom & Media, Paris, France; Casabyte, Inc., Renton, WA; China Telecommunications Corporation, Beijing, People's Republic of China; China Unicom, Beijing, People's Republic of China; Cingular Wireless LLC, Atlanta, GA; Core Information Consult, Jegenstorf, Switzerland; Creation Partnerships Ltd., Fleet, United Kingdom; D&A International Limited, Bad Homburg, Germany; Duends Inc., Chicago, IL; EDS Information Services LLC, Plano, TX; eircom, Dublin, Ireland; Eyelbe Ltd., Malmesbury, United Kingdom; FORS Training Center Company Limited, Moscow, Russia; GCHQ, Cheltenham, United Kingdom; Gefion, Inc., Vienna, VA; Giza Systems, Giza, Cairo, Egypt, ht systemberatung GmbH, Dorsten, Germany, IDS Scheer Japan Co., Ltd., Tokyo, Japan; IDT Spectrum, Newark, NJ; Industria, Dublin, Ireland; Infinera, Sunnyvale, CA; Infozech Software, New Delhi, India; Ipsum Networks, Plano, TX; it vision GmbH, Hamburg, Germany; Japan Telecom Co., LTD., Tokyo, Japan; Juniper Networks, Inc., Sunnyvale, CA; Lawrence Livermore National Laboratory, Livermore, CA; LHS, Frankfurt, Germany; LTC International Inc., Richardson, TX; Martin Dawes Systems, Fearnhead, United Kingdom; Mediaan/abs bv, Heerlen, Netherlands; MetraTech Corp., Waltham, MA; Mobifon SA, Bucharest, Romania; Mobile TeleSystems OJSC, Moscow, Russia; mobilkom austria group services GmbH, Vienna, Austria; MontgomeryCarter Ltd., Finchampstead, United Kingdom; Multikabel, Alkmaar, Netherlands; National Laboratory of Software Development Environment, Beijing, People's Republic of China; NeuStar, Sterling, VA; noventum Consulting GmbH, Muenster, Germany; NTL, Hook, United Kingdom; Oblicore, Inc., Columbia, MD; Office of Communications (OFCOM), London, United Kingdom; OJSC ''VimpelCom,'' Moscow, Russia; ONE–ANS SpA, Monza, Italy; Osborn.TV, Dallas, TX; Petrobras, Rio de Janeiro, Brazil; PMCL MOBILINK, Islamabad, Pakiston; Polski Telefonia Cyfrowa (PTC), Warszawa, Poland; proCaptura as, Billingstad, Norway; Process Dynamics, Altrincham, United Kingdom; PT Natrindo Telepon Seluler, Tangerang, Indonesia; RateIntegration, Durham, NC; Sapient GmbH, Düsseldorf, Germany; SAS Institute Global Services Pvt. Ltd., Pune, India; Scuola Superiore Sant'Anna, Pisa, Italy; shanghai freesky inc., Shanghai, People's Republic of China; Simtel Technologies Ltd., Dublin, Ireland; SMI Telco Ltd., Waterlooville, United Kingdom; Subex Systems Limited, Bangalore, India; Swiss Federal Office of Information Technology, Systems and Telecommunication, Bern, Switzerland; Systems Mechanics, Whitstable, United Kimgdom; Tata Teleservices Ltd., Mumbai, India; Telecom Expert Group, Lisle, IL; Telekom Malaysia Berhad (Co. Registration: 128740–P), Kuala Lumpur, Malaysia; Telynx, Inc., San Francisco, CA; TierOne OSS Technologies Inc., Mississauga, Ontario, Candad; Timesten, Inc., Mountain View, CA; Traventec, Dangan, Ireland; TRIBOLD, London, United Kingdom; TTG Uluslararsi LTD, Istanbul, Turkey; Turkcell Iletisim Hiz AS., Tepebasi, Turkey; Ukrainian Mobile Communications UMC, Kiev, Ukraine; University of Johannesburg, Aucklandpark, South Africa; Vector Communications Ltd., Auckland, New Zealand; Vodacom South Africa, Midrand, South Africa; Vodafone

Ireland, Dublin, Ireland; Vodafone Portugal, Lisboa, Portugal; Voltaire Consultants bv, Baarn, Netherlands; VoluBill, Cedex, France; Waterford Institute of Technology, Waterford, Ireland; and Wisdom Networks Co., Ltd., Tokyo, Japan have been added as parties to this venture.

Also, Agilance, Inc., Outremont, Quebec, Canada; Antic Seiler Rosch, Oldham, United Kingdom; Atrica, Santa Clara, CA; China, Telecom System Integration Co. Ltd., Beijing; People Republic of China; Comrise Technology, Hazlet, NJ; Concord Communications, Marlboro, MA; Connexn Technologies, Wesminster, CO; Croucher Consultants Ltd., Pease Pottage, United Kingdom; Daleen Technologies, Inc., Boca Raton, FL; Digital Fairway Corporation, Toronto, Ontario, Canada; DigitalFuel, San Matio, CA; Econet Wirless Nigeria, Victoria Island, Nigeria; eDynamic, Inc., Planta, TX; Eftia OSS Solutions, Inc., Ottawa, Ontario, Canada; Emperative, Boulder, CO; Enguenity Technologies, Montreal, Quebec, Canada; Etesian GmbH, Holzkirchen, Germany; Getronics Consulting BV, Amsterdam, Netherlands; Gigastream UMTS Technologies, Saabruecken, Germany; Granita Systems, Inc., Manchester, NH; InferData, Mountain View, CA; Integral Access, Inc., Chelmsford, MA; IXI Mobile, Inc., Ra'anana, Israel; Kabira Technolgies, Inc., San Rafael, CA; Leapstone Systems, Inc., Somerset, NJ; Level 3 Communications, Broomfield, CO; MobileTEL EAD, Safia, Bulgaria; Partner Communications Company, Ltd., Rosh- Ha'ayin, Israel; Pedestal Networks, Fremont, CA; People Soft, Inc., Pleasanton, CA; Photonex Corporation, Maynard, MA; Pride S.p.A., Milano, Italy; QT Training LTD, Macclesfield, United Kingdom; Quallaby Corporation, Lowell, MA; Redrock Communications, Bentleigh, Australia; Rocket Software, Alamedia, CA; SMG Co. LTD., Yokohama City, Japan; SunTech Sp. z o.o., Warsaw, Poland; TeleGea, Inc., Waltham, MA; Telekom Applies Business, Kuala Lumpur, Malaysia; Tyco Telecommunications, Morristown, NJ; WestGlobal, Dublin, Ireland; and ZOOM Networks Inc., Beijing, People's Republic of China have withdrawn as parties to this venture.

The following members have changed their names: 4DH Consulting has changed its name to 4DH Software Inc., Seattle, WA; ADC Telecommunications has changed its name to ADC Software Systems, Minneapolis, MN; Intec Telecom Systems has changed its name to ADC Software Systems, Minneapolis, MN; Amdocs Management Ltd. has changed its name to Amdocs, Ra'anana, Israel; Xenicom Ltd. has changed its name to Andrew Network Solutions, Bristol, United Kingdom; Andrew Network Solutions Ltd. has changed its name to Andrew Network Solutions, Bristol, United Kingdom; AutoMagic Consulting LLC has changed its name to AutoMagic KB LLC, Denver Co; Barrett AB has changed its name to Barret AB, Froson, Sweden; Capgemini has changed its name to Capgemini Telecom and Media, Paris, France; Capgemini Telecom Media Entertainment has changed its name to Capgemini Telecom and Media, Paris, France; SESI has changed its name to Celona Technologies Ltd., London, United Kingdom; Equador has changed its name to CH2M Hill, Richmond, United Kingdom; Chungwa Telecom Co., LTD has changed its name to Chungwa Telecom Laboratories Co., LTD, Taoyuan, Taiwan; OSS.CL has changed its name to Computerland, Warsaw, Poland; Defense Information Systems Agency has changed its name to DOD, Fort Monmouth, NJ; SMARTS has changed its name to EMC, Brentford, United Kingdom; Tertio Telecommunications has changed its name to Evolving Systems Ltd., London, United Kingdom; FORS Training CJSC has changed its name to FORS Training Center Company Limited, Moscow, Russia; Incatel AS has changed its name to Incatel, Sandvika, Norway; Industria Networks Ltd has changed its name to Industria, Dublin, Ireland; ICS Intelligent Communication Software has changed its name to Intelligent Communication Software Entwicklungs GmbH, Muenchen, Germany; Intelligent Communication Software has changed its name to Intelligent Communication Software Entwicklungs GmbH, Muenchen, Germany; Networking Technology Laboratory has changed its name to Networking Technology Laboratory (BUTE), Budapest, Hungary; Nokia Networks has changed its name to Nokia Oyj, Tempere, Finland; Office of Communications has changed its name to Office of Communications (OFCOM), London, United Kingdom; Cognera Ltd. Has changed its name to Olista, Natanya, Israel; Cymbal Corporation has changed its name to Patni Computer Services, Fremont, CA; Mobilink has changed its name to PMCL MOBILINK, Islamabad, Pakistan; European Technical Support Limited has changed its name to Q6 Ltd., Dorkins United Kingdom; SAS Global Services has changed its name to SAS Institute Global Services Pvt. Ltd., Pune, India; Sunrise has changed its name to sunrise, Zurich, Switzerland; Steleus Group, Inc. has changed its name to Tekelec, Limonest, France; Inet Technologies, Inc. has changed its name to Tektronix Texas, LLC, Richardson, TX; Telenor AS has changed its name to Telenor ASA, Fornebu, Norway; TICO GmGH has changed its name to TICO GmbH, Weininger, Switzerland; UMC has changed its name to Ukrainian Mobile Communications UMB, Kiev, Ukraine; Watch Mark Corp. has changed its name to Vallent Corporation, Bellevue, WA; and ECSi has changed its name to VokeTel, Thorurhill, Ontario, Canada.

No other changes have been made in either the membership or planned activity of the group research project. Membership in this group research project remains open, and the Forum intends to file additional written notification disclosing all changes in membership.

On October 21, 1988, the Forum filed its original notification pursuant to section 6(a) of the Act. The Department of Justice published a notice in the **Federal Register** pursuant to Section 6(b) of the Act on December 8, 1988 (53 FR 49615).

The last notification was filed with the Department on January 21, 2005. A notice was published in the **Federal Register** pursuant to Section 6(b) of the Act on March 25, 2005 (70 FR 15352).

Dorothy B. Fountain,

Deputy Director of Operations, Antitrust Division.

[FR Doc. 05–20673 Filed 10–14–05; 8:45 am]

BILLING CODE 4410–11–M

DEPARTMENT OF JUSTICE

Parole Commission

Record of Vote of Meeting Closure (Pub. L. 94–409) (5 U.S.C. 552b)

I, Edward F. Reilly, Jr., Chairman of the United States Parole Commission, was present at a meeting of said Commission, which started at approximately 5 p.m., on Thursday, October 6, 2005, at the U.S. Parole Commission, 5550 Friendship Boulevard, 4th Floor, Chevy Chase, Maryland 20815. The purpose of the meeting was to decide two petitions for reconsideration pursuant to 28 CFR 2.27. Five Commissioners were present, constituting a quorum when the vote to close the meeting was submitted.

Public announcement further describing the subject matter of the meeting and certifications of General Counsel that this meeting may be closed by vote of the Commissioners present were submitted to the Commissioners prior to the conduct of any other business. Upon motion duly made,

seconded, and carried, the following Commissioners voted that the meeting be closed: Edward F. Reilly, Jr., Cranston J. Mitchell, Deborah A. Spagnoli, Isaac Fulwood, Jr., and Patricia Cushwa.

In Witness Whereof, I make this official record of the vote taken to close this meeting and authorize this record to be made available to the public.

Dated: October 7, 2005.

Edward F. Reilly, Jr.,

Chairman, U.S. Parole Commission.

[FR Doc. 05–20776 Filed 10–13–05; 9:48 am]

BILLING CODE 4410–01–M

DEPARTMENT OF LABOR

Office of the Secretary

Submission for OMB Review: Comment Request

October 11, 2005.

The Department of Labor (DOL) has submitted the following public information collection requests (ICRs) to the Office of Management and Budget (OMB) for review and approval in accordance with the Paperwork Reduction Act of 1995 (Pub. L. 104–13, 44 U.S.C. chapter 35). A copy of each ICR, with applicable supporting documentation, may be obtained by contacting Darrin King on 202–693–4129 (this is not a toll-free number) or e-mail: *king.darrin@dol.gov.*

Comments should be sent to Office of Information and Regulatory Affairs, Attn: OMB Desk Officer for the Employment Standards Administration (ESA), Office of Management and Budget, Room 10235, Washington, DC 20503, 202–395–7316 (this is not a toll-free number), within 30 days from the date of this publication in the **Federal Register**.

The OMB is particularly interested in comments which:

- Evaluate whether the proposed collection of information is necessary for the proper performance of the functions of the agency, including whether the information will have practical utility;
- Evaluate the accuracy of the agency's estimate of the burden of the proposed collection of information, including the validity of the methodology and assumptions used;
- Enhance the quality, utility, and clarity of the information to be collected; and
- Minimize the burden of the collection of information on those who are to respond, including through the use of appropriate automated, electronic, mechanical, or other technological collection techniques or other forms of information technology, *e.g.*, permitting electronic submission of responses.

Agency: Employment Standards Administration.

Type of Review: Extension of currently approved collection.

Title: Notice of Controversion of Right to Compensation.

OMB Number: 1215–0023.

Form Number: LS–207.

Frequency: On occasion.

Type of Response: Reporting.

Affected Public: Business or other for-profit.

Number of Respondents: 750.

Annual Responses: 15,750.

Average Response Time: 15 minutes.

Estimated Annual Burden Hours: 3,938.

Total Annualized Capital/startup Costs: $0.

Total Annual Costs (operating/maintaining systems or purchasing services): $7,011.00.

Description: The Division of Longshore and Harbor Workers' Compensation administers the Longshore and Harbor Worker's Compensation Act. This Act provides benefits to workers injured in maritime employment on the navigable waters of the United States or in an adjoining area customarily used by an employer in loading, unloading, repairing or building a vessel. Pursuant to sections 914(d) of the Act, and 20 CFR 702.251, if an employer controverts the right to compensation he/she shall file with the district director in the affected compensation district on or before the fourteenth day after he/she has knowledge of the alleged injury or death, a notice, in accordance with a form prescribed by the Secretary, stating that the right to compensation is controverted. Form LS–207 is used for this purpose. Form LS–207 is used by insurance carriers and self-insured employers to controvert claims under the Longshore Act.

Agency: Employment Standards Administration.

Type of Review: Extension of currently approved collection.

Title: Agreement and Undertaking.

OMB Number: 1215–0034.

Form Number: OWCP–1.

Frequency: On occasion.

Type of Response: Reporting.

Affected Public: Business or other for-profit.

Number of Respondents: 300.

Annual Responses: 300.

Average Response Time: 15 minutes.

Estimated Annual Burden Hours: 75.

Total Annualized Capital/startup Costs: $0.

Total Annual Costs (operating/maintaining systems or purchasing services): $120.00.

Description: Coal Mine operators and Longshore companies desiring to be self-insurers are required by law (30 U.S.C. 933 BL and 33 U.S.C. 932 LS) to produce security in terms of an indemnity bond, security deposit, or for Black Lung only, a letter of credit or 501(c)(21) trust. Once a company's application to become self-insured is reviewed by the Division of Coal Mine Workers; Compensation or by the Division of Longshore and Harbor Workers' Compensation and it is determined the company is potentially eligible, an amount of security is determined to guarantee the payment of benefits required by the Act.

The OWCP–1 form is executed by the self-insurer who agrees to abide by the Department's rules and authorizes the Secretary, in the event of default, to file suit to secure payment from a bond underwriter or in the case of a Federal Reserve account, to sell the securities for the same purpose. A company cannot be authorized to self-insure until this requirement is met. Regulations establishing this requirement are at 20 CFR 726.110 for Coal Mine/Black Lung and 20 CFR 703.304 for Longshore.

Agency: Employment Standards Administration.

Type of Review: Extension of currently approved collection.

Title: Application for Federal Certificate of Age.

OMB Number: 1215–0083.

Form Number: WH–14.

Frequency: On occasion.

Type of Response: Reporting and Recordkeeping.

Affected Public: Business or other for-profit; not-for-profit institutions; farms; and State, tribal, or local government.

Number of Respondents: 10.

Annual Responses: 10.

Average Response Time: 10 minutes.

Estimated Annual Burden Hours: 2.

Total Annualized Capital/startup Costs: $0.

Total Annual Costs (operating/maintaining systems or purchasing services): $0.

Description: Fair Labor Standards Act (FLSA), 29 U.S.C. 201 *et seq.*, section 3(l) provides, in part, that an employer may protect against unwitting employment of "'oppressive child labor,'" as defined in section 3(l), by having on file a certificate issued pursuant to Department of Labor regulations certifying that the named person meets the FLSA minimum age requirements for employment. FLSA section 11(c) requires that all employers covered by the Act make, keep, and

preserve records of wages, hours, and other conditions and practices of employment with respect to their employees. The employer is to maintain the records for such period of time and make such reports as prescribed by regulations issued by the Secretary of Labor. Form WH–14 is the application employers submit to obtain Federal Certificates of Age to protect themselves against unwitting child labor violations of the Fair Labor Standards Act.

Darrin A. King,

Acting Departmental Clearance Officer.

[FR Doc. 05–20667 Filed 10–14–05; 8:45 am]

BILLING CODE 4510–CF–P

DEPARTMENT OF LABOR

Generic Solicitation for Grant Applications

ACTION: Notice.

SUMMARY: The Department of Labor, as part of its continuing effort to reduce paperwork and respondent burden conducts a preclearance consultation program to provide the general public and Federal agencies with an opportunity to comment on proposed and/or continuing collection of information in accordance with the Paperwork Reduction Act of 1995 (PRA95) [44 U.S.C. 3506(c)(A)]. This program helps to ensure that requested data can be provided in the desired format, reporting burden (time and financial resources) is minimized, collection instruments are clearly understood, and the impact of collection requirements on respondents can be properly assessed. Currently, the Department of Labor is soliciting comments concerning the proposed new collection for the Generic Solicitation for Grant Applications. A copy of the proposed information collection request (ICR) can be obtained by contacting the office listed below in the addressee section of this notice.

DATES: Written comments must be submitted to the office listed in the address's section below on or before December 16, 2005.

ADDRESSES: Lance Grubb, U.S. Department of Labor, Employment and Training Administration, Room N–465, 200 Constitution Avenue, NW., Washington, DC 20210, phone: 202–693–3151., FAX: 202–693–2857, e-mail: *grubb.lance@dol.gov.*

SUPPLEMENTARY INFORMATION:

I. Background

The Department is requesting approval for a generic Solicitation for Grant Application (SGA) form for information collection requirements for SGAs that extend beyond what is collected on currently approved standard forms. OMB approval of this generic SGA form will assist the Department to carry out its responsibilities under the Paperwork Reduction Act by accurately accounting for the public burden associated with grant applications through the promotion of a common structure for reporting the information collection requirements contained in DOL's SGAs.

Periodically, the Department of Labor (DOL or the Department) solicits applications for grants through issuing a ''Solicitation for Grant Applications'' or ''SGA.'' To ensure that grants are awarded to the applicant best suited to perform the functions of the grant, applicants are generally required to submit a two-part application. The first part of DOL's grant applications consists of submitting the Standard Form 424 (SF–424), ''Application for Federal Assistance.'' The second part of a grant application usually requires a technical proposal demonstrating the applicant's capabilities in accordance with a statement of work and/or selection criteria.

The information collected in response to solicitations for grant applications has been and will be used by the Department of Labor for awarding grants to the applicants most suited for fulfilling the mission of the grant.

II. Review Focus

The Department of Labor is particularly interested in comments which:

- Evaluate whether the proposed collection of information is necessary for the proper performance of the functions of the agency, including whether the information will have practical utility;
- Evaluate the accuracy of the agency's estimate of the burden of the proposed collection of information, including the validity of the methodology and assumptions used;
- Enhance the quality, utility, and clarity of the information to be collected; and
- Minimize the burden of the collection of information on those who are to respond, including through the use of appropriate automated, electronic, mechanical, or other technological collection techniques or other forms of information technology, e.g., permitting electronic submissions of responses.

III. Current Actions

Type of Review: New collection.

Agency: Department of Labor.

Title: Generic Solicitation for Grant Applications (SGA).

OMB Number: None at this time.

Agency Number: None at this time.

Recordkeeping: Not applicable.

Affected Public: Business or other for-profits; not-for-profit institutions; state, local or tribal governments.

Total Respondents: 5,750.

Estimated Total Burden Hours: 5,750 SGA submissions to DOL per year × 20 hours = 115,000 burden hours.

Total Burden Cost (capital/startup): $0.

Total Burden Cost (operating/maintaining): $0.

Comments submitted in response to this comment request will be summarized and/or included in the request for Office of Management and Budget approval of the information collection request; they will also become a matter of public record.

Dated: October 3, 2005.

Emily Stover DeRocco,

Assistant Secretary Assistant Secretary for Employment and Training.

[FR Doc. 05–20668 Filed 10–14–05; 8:45 am]

BILLING CODE 4510–30–P

NATIONAL CREDIT UNION ADMINISTRATION

Sunshine Act Meeting

TIME AND DATE: 10 a.m., Thursday, October 20, 2005.

PLACE: Board Room, 7th Floor, Room 7047, 1775 Duke Street, Alexandria, VA 22314–3428.

STATUS: Open.

MATTERS TO BE CONSIDERED:

1. Quarterly Insurance Fund Report.
2. Final Rule: Part 713 of NCUA's Rules and Regulations, Fidelity Bond and Insurance Coverage for Federal Credit Unions.

FOR FURTHER INFORMATION CONTACT: Mary Rupp, Secretary of the Board, Telephone: (703) 518–6304.

Mary Rupp,

Secretary of the Board.

[FR Doc. 05–20865 Filed 10–13–05; 3:15 pm]

BILLING CODE 7535–01–M

NUCLEAR REGULATORY COMMISSION

[Docket No. 50–382]

Entergy Operations, Inc., Waterford Steam Electric Station, Unit 3; Notice of Consideration of Approval of Transfer of Facility Operating License and Materials License and Conforming Amendment and Opportunity for a Hearing

The U.S. Nuclear Regulatory Commission (NRC or the Commission) is considering issuance of an order under section 50.80 of Title 10 of the Code of Federal Regulations (10 CFR), approving the transfer of control of Facility Operating License and Materials License No. NPF–38 for Waterford Steam Electric Station, Unit 3 (Waterford 3). The transfer is associated with the restructuring of Entergy Louisiana, Inc. (ELI), from a Louisiana corporation to a Texas limited liability company, Entergy Louisiana, LLC (ELL). Entergy Operations Inc. (EOI), the current operators of Waterford 3, will continue to operate the plant. The Commission is further considering amending the license for administrative purposes to reflect the proposed transfer, including removing references to ELI in the license.

ELI is the owner of Waterford 3, which is operated by EOI. Both ELI and EOI are direct subsidiaries of Entergy Corporation. ELI is currently a Louisiana corporation. Under the proposed restructuring, ELI will become a Texas corporation (''Holdings'') and will form ELL, which will be a Texas limited liability company. Holdings will remain a subsidiary of Entergy Corporation which will own all the common membership interests in ELL. All of the common stock and preferred stock of ELI will continue to be outstanding and to be owned by the same stockholders with the same ownership rights and interests as those stockholders had immediately before the restructuring.

ELL will assume all of the regulated utility obligations of ELI, along with the property and other assets of ELI that are used to provide retail and wholesale electric service to ELI's customers. ELL's retail utility operations will be subject to the jurisdiction of the Louisiana Public Service Commission (LPSC) to the same extent that the LPSC currently possesses jurisdiction over ELI's retail utility operations. ELL will succeed to and assume all of ELI's jurisdictional tariffs, rate schedules, and service agreements, and provide electric service to ELI's customers without interruption.

EOI operates Waterford 3 pursuant to an Operating Agreement with ELI. EOI will continue to operate Waterford 3 and the current Operating Agreement will be amended to reflect the new owner of the plant. EOI will not be affected by the restructuring.

Pursuant to 10 CFR 50.80, no license, or any right thereunder, shall be transferred, directly or indirectly, through transfer of control of the license, unless the Commission shall give its consent in writing. The Commission will approve an application for the transfer of a license, if the Commission determines that the proposed transferee is qualified to hold the license, and that the transfer is otherwise consistent with applicable provisions of law, regulations, and orders issued by the Commission pursuant thereto.

Before issuance of the proposed conforming license amendment, the Commission will have made findings required by the Atomic Energy Act of 1954, as amended (the Act), and the Commission's regulations.

As provided in 10 CFR 2.1315, unless otherwise determined by the Commission with regard to a specific application, the Commission has determined that any amendment to the license of a utilization facility which does no more than conform the license to reflect the transfer action involves no significant hazards consideration. No contrary determination has been made with respect to this specific license amendment application. In light of the generic determination reflected in 10 CFR 2.1315, no public comments with respect to significant hazards considerations are being solicited, notwithstanding the general comment procedures contained in 10 CFR 50.91.

The filing of requests for hearing and petitions for leave to intervene, and written comments with regard to the license transfer application, are discussed below.

Within 20 days from the date of publication of this notice, any person whose interest may be affected by the Commission's action on the application may request a hearing and, if not the applicant, may petition for leave to intervene in a hearing proceeding on the Commission's action. Requests for a hearing and petitions for leave to intervene should be filed in accordance with the Commission's rules of practice set forth in Subpart C ''Rules of General Applicability: Hearing Requests, Petitions to Intervene, Availability of Documents, Selection of Specific Hearing Procedures, Presiding Officer Powers, and General Hearing Management for NRC Adjudicatory Hearings,'' of 10 CFR part 2. In particular, such requests and petitions must comply with the requirements set forth in 10 CFR 2.309. Untimely requests and petitions may be denied, as provided in 10 CFR 2.309(c)(1), unless good cause for failure to file on time is established. In addition, an untimely request or petition should address the factors that the Commission will also consider, in reviewing untimely requests or petitions, set forth in 10 CFR 2.309(c)(1)(I)-(viii).

Requests for a hearing and petitions for leave to intervene should be served upon David A. Repka, Esq., Winston & Stawn, LLP, 1700 K Street, NW., Washington, DC 20006–3817; the General Counsel, U.S. Nuclear Regulatory Commission, Washington, DC 20555–0001 (OGCLT@NRC.gov); and the Secretary of the Commission, U.S. Nuclear Regulatory Commission, Washington, DC 20555–0001, Attention: Rulemakings and Adjudications Staff, in accordance with 10 CFR 2.302 and 2.305.

The Commission will issue a notice or order granting or denying a hearing request or intervention petition, designating the issues for any hearing that will be held and designating the Presiding Officer. A notice granting a hearing will be published in the **Federal Register** and served on the parties to the hearing.

As an alternative to requests for hearing and petitions to intervene, within 30 days from the date of publication of this notice, persons may submit written comments regarding the license transfer application, as provided for in 10 CFR 2.1305. The Commission will consider and, if appropriate, respond to these comments, but such comments will not otherwise constitute part of the decisional record. Comments should be submitted to the Secretary, U.S. Nuclear Regulatory Commission, Washington, DC 20555–0001, Attention: Rulemakings and Adjudications Staff, and should cite the publication date and page number of this **Federal Register** notice.

For further details with respect to this action, see the application dated July 20, 2005, available for public inspection at the Commission's Public Document Room (PDR), located at One White Flint North, Public File Area O1 F21, 11555 Rockville Pike (first floor), Rockville, Maryland. Publicly available records will be accessible electronically from the Agencywide Documents Access and Management System's (ADAMS) Public Electronic Reading Room on the Internet at the NRC Web site, *http://www.nrc.gov/reading-rm/adams.html.* Persons who do not have access to

ADAMS or who encounter problems in accessing the documents located in ADAMS, should contact the NRC PDR Reference staff by telephone at 1–800–397–4209, 301–415–4737 or by e-mail to *pdr@nrc.gov.*

Dated at Rockville, Maryland this 6th day of October, 2005.

For the Nuclear Regulatory Commission.

Nageswaran Kalyanam,

Project Manager, Section 1, Project Directorate IV, Division of Licensing Project Management, Office of Nuclear Reactor Regulation.

[FR Doc. E5–5688 Filed 10–14–05; 8:45 am]

BILLING CODE 7590–01–P

NUCLEAR REGULATORY COMMISSION

[Docket No. 50–255]

Nuclear Management Company, LLC, Palisades Plant; Exemption

1.0 Background

Nuclear Management Company, LLC (NMC) is the holder of Facility Operating License No. DPR–20, which authorizes operation of the Palisades Nuclear Plant (PNP). The license provides, among other things, that the facility is subject to all rules, regulations, and orders of the Nuclear Regulatory Commission (NRC or Commission) now or hereafter in effect.

The facility consists of a pressurized-water reactor located in VanBuren County in Michigan.

2.0 Request/Action

Title 10 of the Code of Federal Regulations 10 CFR part 50, Section 50.68(b)(1) specifies requirements for handling and storing spent fuel assemblies during cask loading, unloading, and handling operations. Section 50.68(b)(1) sets forth the following requirement that must be met, in lieu of a monitoring system capable of detecting criticality events:

> Plant procedures shall prohibit the handling and storage at any one time of more fuel assemblies than have been determined to be safely subcritical under the most adverse moderation conditions feasible by unborated water.

NMC is unable to satisfy the above requirement for handling the 10 CFR part 72 licensed contents of the Transnuclear (TN) NUHOMS®–32PT storage system. Section 50.12(a) allows licensees to apply for an exemption from the requirements of 10 CFR part 50, if special circumstances are demonstrated. NMC's letter of June 21, as supplemented August 25, 2005, requested a license exemption from the requirements of 10 CFR, part 50, Section 50.68(b)(1) for handling and storing spent fuel assemblies during cask loading, unloading, and handling operations for PNP. NMC stated in its letters that complying with 10 CFR 50.68(b)(1) is not necessary for handling the 10 CFR part 72 licensed contents of the cask system to achieve the underlying purpose of the rule. Additionally, NMC contends that complying with the rule in this case will result in undue hardship.

3.0 Discussion

Pursuant to 10 CFR 50.12, ''Specific Exemption,'' the Commission may, upon application by any interested person or upon its own initiative, grant exemptions from the requirements of 10 CFR part 50 when (1) the exemptions are authorized by law, will not present an undue risk to public health or safety, and are consistent with the common defense and security; and (2) when special circumstances are present. These circumstances include the special circumstance listed in 10 CFR 50.12(a)(2)(iii), where ''Compliance would result in undue hardship or other costs that are significantly in excess of those contemplated when the regulation was adopted, or that are significantly in excess of those incurred by others similarly situated.''

In its exemption supplement of August 25, 2005, NMC provided a justification for satisfying the hardship special circumstance. The staff agrees with NMC that due to the short duration between the March 23, 2005, issuance of Regulatory Issue Summary (RIS) 2005–05, ''Regulatory Issues Regarding Criticality Analyses for Spent Fuel Pools and Independent Spent Fuel Storage Installations'' (ADAMS ML043500532), and the scheduled October 2005 cask loading campaign at PNP, insufficient time exists for NMC to perform the required analyses necessary to demonstrate compliance with 10 CFR 50.68. RIS 2005–05 identified an acceptable methodology for demonstrating compliance with the 10 CFR 50.68(b)(1) requirements during cask loading, unloading, and handling operations in pressurized water reactor SFPs. The staff has determined that a hardship claim may be acceptable for licensees that have previously scheduled loading campaigns commencing before March 31, 2006 (1 year after the issuance of the RIS). Therefore, the staff concludes that pursuant to 10 CFR 50.12(a)(2)(iii), NMC has provided sufficient justification to support a conclusion that undue hardship would occur if NMC were required to postpone its scheduled cask-loading campaign until it could comply with 10 CFR 50.68.

However, since NMC's justification is based on the time needed to perform the necessary analyses, the staff has determined that NMC must comply with the regulations within an appropriate amount of time. In its exemption supplement, NMC proposed that the exemption remain valid until July 31, 2006. This will provide enough time for NMC to perform the necessary analyses and submit a license amendment request (LAR) to comply with 10 CFR 50.68. If NMC submits an LAR by July 31, 2006, this exemption will remain in effect until such time as the NRC staff either approves or denies the LAR. In this case, the NRC staff finds it acceptable to leave the exemption in effect because it will allow NMC to unload any previously loaded cask should it become necessary. However, if NMC does not submit a license amendment by July 31, 2006, this exemption will expire, and NMC will not be able to load, unload, or handle dry shielded canisters (DSCs) in the spent fuel pool (SFP). In its exemption supplement, NMC committed to complete supporting criticality analyses and submit a LAR to allow credit for burnup to meet the requirements of 10 CFR 50.68(b)(1) in July 2006 or earlier.

The NRC staff also evaluated NMC's request to determine if NMC has provided reasonable assurance that it can conduct the proposed cask loading, unloading, and handling activities in a safe and effective manner. PNP's Technical Specifications (TSs) currently permit NMC to store spent fuel assemblies in high-density storage racks in its SFP. In accordance with the provisions of 10 CFR 50.68(b)(4), NMC takes credit for soluble boron for criticality control, and ensures that the effective multiplication factor (k_{eff}) of the SFP does not exceed 0.95 if flooded with borated water. Section 50.68(b)(4) also requires that if credit is taken for soluble boron, the k_{eff} must remain below 1.0 (subcritical) if flooded with unborated water. However, NMC is unable to satisfy the requirement to maintain the k_{eff} below 1.0 with unborated water at all times, which is also the requirement of 10 CFR 50.68(b)(1). Therefore, NMC's request for exemption from 10 CFR 50.68(b)(1) proposes to permit NMC to perform spent fuel loading, unloading, and handling operations related to dry cask storage without being subcritical under the most adverse moderation conditions feasible by unborated water.

Appendix A, ''General Design Criteria (GDC) for Nuclear Power Plants,'' of 10 CFR, part 50, lists the minimum design

requirements for nuclear power plants. According to GDC 62, ''Prevention of criticality in fuel storage and handling,'' PNP must have physical systems or processes to limit the potential for criticality in the fuel handling and storage system. Section 5.1.7.3 of PNP's Updated Final Safety Analysis Report (UFSAR) describes PNP's compliance with GDC 62. Section 5.1.7.3 specifically references the design of the spent fuel storage racks to maintain a geometrically safe configuration that provides spacing and neutron poisons sufficient to maintain a k_{eff} of less than 1.0 when flooded with unborated water.

Section 50.68 of 10 CFR part 50, gives NRC requirements for maintaining subcritical conditions in SFPs. Section 50.68 specifies criticality-control requirements that, if satisfied, ensure that an inadvertent criticality in the SFP is an extremely unlikely event. These requirements include appropriate, conservative criticality margins during handling and storage of spent fuel. Section 50.68(b)(1) states, ''Plant procedures shall prohibit the handling and storage at any one time of more fuel assemblies than have been determined to be safely subcritical under the most adverse moderation conditions feasible by unborated water.'' Specifically, 10 CFR 50.68(b)(1) requires NMC to maintain the SFP in a subcritical condition during handling and storage operations without crediting the soluble boron in the SFP water.

NMC received a license to construct and operate an Independent Spent Fuel Storage Installation (ISFSI) at PNP. The ISFSI permits NMC to store spent fuel assemblies in large concrete dry storage casks (Horizontal Storage Modules). As part of its ISFSI loading campaigns, NMC transfers spent fuel assemblies to a DSC in the cask pit area of the SFP. NMC performed criticality analyses of a fully-loaded DSC with fuel having the highest permissible reactivity. It determined that a soluble-boron credit was necessary to ensure that the DSC would remain subcritical in the SFP. NMC is thus unable to satisfy the requirement of 10 CFR 50.68(b)(1) to ensure subcritical conditions during handling and storage of spent fuel assemblies in the pool with unborated water. Accordingly, NMC identified the need for an exemption from the 10 CFR 50.68(b)(1) requirement to support DSC loading, unloading, and handling operations, without being subcritical under the most adverse moderation conditions feasible by unborated water.

The NRC staff evaluated the possibility of an inadvertent criticality of the spent nuclear fuel at PNP during DSC loading, unloading, and handling. The NRC staff has established a set of acceptance criteria that, if met, minimize the potential for an inadvertent criticality event. In lieu of complying with 10 CFR 50.68(b)(1), the NRC staff determined that an inadvertent criticality accident is unlikely to occur if NMC meets the following five criteria:

- Criterion 1—The cask criticality analyses are based on the following conservative assumptions:
  - —No credit is taken for fuel-related burnable absorbers.
  - —All fuel assemblies in the cask are unirradiated and at the highest permissible enrichment.
  - —The cask is assumed to be flooded with moderator at the temperature and density corresponding to optimum moderation.
  - —Only 75 percent of the Boron-10 in the fixed poison panel inserts is credited.
- Criterion 2—NMC's ISFSI TSs require the soluble boron concentration to be equal to, or greater than, the level assumed in the criticality analysis. TS surveillance requirements specify periodically verifying the concentration both prior to, and during, loading and unloading operations.
- Criterion 3—Radiation monitors, as required by GDC 63, ''Monitoring Fuel and Waste Storage,'' are provided in fuel storage and handling areas to detect excessive radiation levels and to initiate appropriate safety actions.
- Criterion 4—The quantity of other forms of special nuclear material (*e.g.*, sources, detectors, etc.) to be stored in the cask will not increase the effective multiplication factor above the limit calculated in the criticality analysis.
- Criterion 5—Sufficient time exists for plant personnel to identify and terminate a boron dilution event prior to achieving a critical boron concentration in the DSC. NMC must provide the following to demonstrate that it can safely identify and terminate a boron dilution event:
  - —A plant-specific criticality analysis to identify the critical boron concentration in the cask based on the highest reactivity loading pattern.
  - —A plant-specific boron dilution analysis to identify all potential dilution pathways, their flowrates, and the time necessary to reach a critical boron concentration.
  - —A description of all alarms and indications available to promptly alert operators of a boron dilution event.
  - —A description of plant controls that NMC will implement to minimize the potential for a boron dilution event.
  - —A summary of operator training, and procedures that will be used, to ensure that operators can quickly identify and terminate a boron dilution event.

In RIS 2005–05, the NRC identified an acceptable methodology for demonstrating compliance with the 10 CFR 50.68(b)(1) requirements during cask loading, unloading, and handling operations in pressurized water reactor SFPs. The NRC staff has determined that licensee implementation of this methodology will eliminate the need to grant future exemptions for cask storage and handling evolutions. NMC submitted its exemption request on June 21, 2005, 3 months after the issuance of the RIS. Since the exemption request was submitted after the issuance of the RIS, and an acceptable methodology for complying with the regulation exists, the staff has determined that it is not appropriate to approve the exemption based on the 50.12(a)(2)(ii) special circumstance related to the underlying purpose of the rule.

In its August 25, 2005, supplement, NMC contends that due to the short duration available between the March 2005 issuance of the RIS, and the October 2005 planned cask loading campaign, an undue hardship exists. Section 50.12 of 10 CFR provides for a special circumstance that allows the staff to review an exemption request based on undue hardship. Specifically, 10 CFR 50.12(a)(2)(iii) states the following:

> Compliance would result in undue hardship or other costs that are significantly in excess of those contemplated when the regulation was adopted, or that are significantly in excess of those incurred by others similarly situated.

Since the NRC staff has determined that it is not appropriate to grant the exemption based on satisfying the underlying intent of the rule, it reviewed the exemption request based on the undue hardship special circumstance in 10 CFR 50.12(a)(2)(iii). In determining the technical acceptability of NMC's exemption request, the NRC staff reviewed NMC's criticality analyses submitted to support the ISFSI license application and its exemption request, and NMC's boron dilution analysis. For each of the aspects, the NRC staff evaluated whether NMC's analyses and methodologies provide reasonable

assurance that adequate safety margins are developed, and can be maintained, in the PNP SFP during loading of spent fuel into DSCs for dry cask storage.

3.1 Criticality Analyses

The NRC staff's review of NMC's criticality analyses, as described in the Standardized NUHOMS® Fuel Safety Analysis Report, dated 6/30/04 (ADAMS ML051040570), consists of four parts. First, the NRC staff reviewed the methodology and assumptions NMC used in its criticality analysis to determine if Criterion 1 was satisfied. NMC stated the following:

- It took no credit in the criticality analyses for burnup or fuel-related burnable neutron absorbers.
- All assemblies were analyzed at the highest permissible enrichment.
- All criticality analyses for a flooded DSC were performed at temperatures and densities of water corresponding to optimum moderation conditions.

In its exemption request, NMC provided the results of its optimum moderation analysis that effectively demonstrated that the optimum moderation condition had been identified. NMC also said that it credited 90 percent of the Boron-10 content for the fixed neutron absorber in the DSC. NUREG–1536, ''Standard Review Plan for Dry Cask Storage System,'' states that ''[f] or a greater credit allowance [*i.e.*, greater than 75 percent for fixed neutron absorbers] special, comprehensive fabrication tests capable of verifying the presence and uniformity of the neutron absorber are needed.'' The NRC staff accepted a 90-percent credit for the fixed neutron absorbers as described in Section 6 of Appendix M of the Standardized NUHOMS® Final Safety Analysis Report. Therefore, for the purposes of this exemption, the staff finds a 90-percent credit acceptable on the basis that it has previously been reviewed and approved by the NRC. Based on its review of the criticality analyses and the information submitted in its exemption request, the NRC staff finds that NMC has satisfied Criterion 1.

Second, the NRC staff reviewed the proposed PNP ISFSI TSs. NMC's criticality analyses credit soluble boron for reactivity control during DSC loading, unloading, and handling operations. Since the boron concentration is a key safety component necessary for ensuring subcritical conditions in the pool, NMC must have a conservative ISFSI TS capable of ensuring that sufficient soluble boron is present to perform its safety function. The ISFSI TSs applicable to the NUHOMS®–32PT DSC, and attached to the Certificate of Compliance No. 1004, contain the requirements for the minimum soluble boron concentration as a function of fuel assembly class, DSC basket type, and corresponding assembly average initial enrichment values. In all cases, the boron concentration required by the ISFSI TS ensures that the k_{eff} will be below 0.95 for the analyzed loading configuration. Additionally, NMC's ISFSI TSs contain surveillance requirements that assure it will verify the boron concentration is above the required level both prior to, and during, DSC loading, unloading, and handling operations. Based on its review of the PNP ISFSI TSs, the NRC staff finds that NMC has satisfied Criterion 2.

Third, the NRC staff reviewed the PNP's UFSAR, and the information provided by NMC in its exemption request, to ensure that it complies with GDC 63. GDC 63 requires that licensees have radiation monitors in fuel storage and associated handling areas to detect conditions that may result in a loss of residual heat removal capability and excessive radiation levels and initiate appropriate safety actions. In its exemption request, NMC stated that its radiation monitoring system consists of gamma-sensitive detector assemblies in the SFP area, with audible alarm at the initiating detector and in the main control room. NMC stated in its exemption request that operations personnel will investigate the cause of high radiation levels and initiate appropriate safety actions. Furthermore, NMC's compliance with GDC 63 is described in its UFSAR, Sections 5.1.7.4 and 9.11.4.4. Based on its review of the exemption request and the PNP UFSAR, the NRC staff finds that NMC has satisfied Criterion 3.

Fourth, as part of the criticality analysis review, the NRC staff evaluated the storage of non-fuel related material in a DSC. The NRC staff evaluated the potential to increase the reactivity of a DSC by loading it with materials other than spent nuclear fuel and fuel debris. The approved contents for storage in the NUHOMS®–32PT cask design are listed in the PNP ISFSI TS Limiting Condition for Operation (LCO) 1.2.1 ''Fuel Specifications.'' This ISFSI TS LCO restricts the contents of the DSC to only fuels and non-fissile materials irradiated at PNP. As such, PNP is prohibited from loading other forms of special nuclear material (*e.g.*, sources, detectors, etc.) in the DSC. Therefore, the NRC staff determined that the loading limitations described in PNP's ISFSI TSs will ensure that any authorized components loaded in the DSCs will not result in a reactivity increase. Based on its review of the loading restrictions, the NRC staff finds that NMC has satisfied Criterion 4.

3.2 Boron Dilution Analysis (Criterion 5)

Since NMC's ISFSI application relies on soluble boron to maintain subcritical conditions within the DSCs during loading, unloading, and handling operations, the NRC staff reviewed NMC's boron dilution analysis to determine whether appropriate controls, alarms, and procedures were available to identify and terminate a boron dilution accident prior to reaching a critical boron concentration.

The NRC's letter of October 25, 1996, ''Topical Report Evaluation of WCAP–14416, Westinghouse Spent Fuel Rack Criticality Analysis Methodology'' (ADAMS #9610300008), issued a safety evaluation on licensing topical report WCAP–14416, ''Westinghouse Spent Fuel Rack Criticality Analysis Methodology.'' This safety evaluation specified that the following issues be evaluated for applications involving soluble boron credit:

- Events that could cause boron dilution;
- Time available to detect and mitigate each dilution event;
- Potential for incomplete boron mixing;
- Adequacy of the boron concentration surveillance interval.

The criticality analyses performed for the NUHOMS®-32PT DSC are described in the FSAR for the Standardized NUHOMS® Horizontal Modular Storage System for Irradiated Nuclear Fuel. NMC used the same criticality analysis methods, models, and assumptions for its boron dilution evaluation. These PNP criticality calculations are based on the KENO V.a code. The calculations determined the minimum soluble boron concentration required to maintain subcriticality ($k_{eff} < 1.0$) following a boron dilution event in a NUHOMS®-32PT DSC loaded with fuel assemblies that bound the PNP fuel designs (Combustion Engineering 15×15 fuel). To ensure that the calculated critical boron concentrations were bounding for all loading conditions, NMC employed conservative fuel enrichments in its analysis. NMC's criticality analyses were based on 3.6 weight-percent Uranium-235 enriched fuel, as opposed to the 3.4 weight percent limit in the NUHOMS®-32PT DSC TSs. The results of these calculations for the bounding case indicate that subcriticality is maintained if the soluble boron concentration remains greater than or equal to 1850 ppm. PNP's ISFSI TSs

require NMC to maintain the soluble boron concentration greater than 2500 ppm in the DSC at all times. NMC indicated that proposed Amendment 9 to the NUHOMS® Certificate of Compliance 1004 provides analyses to support a variable, minimum-required, soluble-boron concentration as a function of the initial enrichment of the fuel to be stored. NMC committed in its exemption request to not implement this proposed change. Instead, NMC will continue to conduct DSC operations at a boron concentration of greater than or equal to 2500 ppm.

TS surveillance requirements for the NUHOMS®-32PR Cask System require the boron concentration in the SFP, and in the water to be introduced in the DSC, to be verified as follows:

- Within 4 hours prior to flooding the DSC cavity;
- Within 4 hours prior to inserting the first spent fuel assembly into the DSC;
- Reconfirmed at intervals not to exceed 48 hours until such time as the DSC is removed from the SFP;

NMC's analysis identified all credible potential sources that could dilute the SFP to critical conditions. NMC determined that the limiting boron dilution event occurs when water from the fire protection system, with a maximum flow rate of 210 gpm from a 1.5-inch diameter hose, is added to the SFP. NMC's calculations show that at least 4 hours will be available to terminate the event before the DSC water boron concentration decreases from 2500 ppm to the critical concentration of 1850 ppm, assuming a straight dilution to the SFP overflow limit and a feed and bleed operation thereafter with instantaneous complete mixing.

The Palisades' SFP is a large rectangular structure filled with borated water which completely covers the spent fuel assemblies. During loading, unloading, and handling activities, the DSC is located in a 9 by 9 foot area in the north east corner of the SFP. This area is open to the SFP, thereby ensuring that thermal currents within the pool will mix the volume near the DSC with the remainder of the pool.

To demonstrate that sufficient time exists for plant personnel to identify and terminate a boron dilution event, NMC described all alarms available to alert operators, and plant controls that will be implemented. There is no automatic level control system for the SFP; therefore, the SFP will overflow on an uncontrolled water addition. However, a high-level alarm in the control room would alert personnel of a potential boron dilution event within 45 minutes for a 210 gpm dilution rate; 30 additional minutes will elapse before the pool begins to overflow. From this point, NMC calculated that at least 3 more hours are available to mitigate the dilution event before the boron concentration is reduced to the critical concentration of 1850 ppm.

In its exemption request of June 21, 2005, NMC stated that ''to ensure defense-in-depth regarding the detection of a boron dilution event, NMC will revise procedures to include a requirement that whenever a 32PT DSC is in the SFP and fuel is in the DSC, the SFP level will be monitored on at least an hourly frequency (via television monitor or locally) to ensure that the SFP is not overflowing, and that SFP water level is not unintentionally rising.'' Therefore, should a boron dilution event occur, the most conservative time for the individual to detect the event would be when the SFP begins to overflow. Assuming the pool water level starts just above the low-level alarm setpoint, then at most 73.3 minutes could elapse since the start of the dilution. With a limiting value of 210 gpm of unborated water being added to the pool, there would be 2.96 additional hours to mitigate and terminate the event. The staff finds that this is acceptable.

To ensure that operators are capable of identifying and terminating a boron dilution event during DSC loading, unloading, and handling operations, NMC stated that operator training will be conducted. NMC said that during training activities, operators will receive revised alarm manual procedures, which verify that the SFP boron concentration is in compliance with the new ISFSI TS limit prior to the loading of a NUHOMS®-32PR DSC.

Based on the staff's review of NMC's exemption request dated June 21, 2005, and its boron dilution analysis, the staff finds that NMC has provided sufficient information to demonstrate that an undetected and uncorrected dilution from the TS required boron concentration to the calculated critical boron concentration is very unlikely. Based on its review of the boron analysis and enhancements to the operating procedures and operator training program, the staff finds NMC has satisfied Criterion 5.

Therefore, in conjunction with the conservative assumptions used to establish the TS-required boron concentration and critical boron concentration, the boron dilution evaluation demonstrates that the SFP and DSC will remain subcritical during spent fuel loading, unloading and handling operations.

Accordingly, the NRC staff concludes that since NMC has satisfied the five criteria, as described in Section 3.0 of this exemption, NMC has provided reasonable assurance that it can conduct the proposed cask loading, unloading, and handling activities in a safe and effective manner.

Section 50.68(b)(1) of 10 CFR was promulgated to require that adequate controls are in place so that the handling and storage of fuel assemblies is conducted in a manner that provides reasonable assurance that the fuel assemblies will remain safely subcritical. Based on the NRC staff's review of NMC's exemption request, the staff has determined the following:

- NMC has demonstrated that sufficient controls are in place to provide reasonable assurance that there is no undue risk to public health and safety given conservative assumptions in the criticality analysis (Criterion 1).
- Surveillances periodically verify the boron concentration before, and during, loading and unloading (Criterion 2).
- Radiation monitoring equipment is used to detect excessive radiation and initiate appropriate protective actions (Criterion 3).

Only fuel authorized by the ISFSI TSs will be loaded and stored in the ISFSI (Criterion 4).

- Boron dilution events have been analyzed, and there are sufficient monitoring capabilities and time for NMC to identify and terminate a dilution event prior to achieving a critical boron concentration in the cask (Criterion 5).

Therefore, the NRC staff concludes that NMC has established sufficient controls to ensure the fuel assemblies remain subcritical during loading, unloading, and handling within the SFP and DSC so that there is no undue risk to public health and safety.

This exemption results in changes to the operation of the plant by allowing the operation of the new dry fuel storage facility and loading of the NUHOMS®-32PT DSC.

4.0 Conclusion

Accordingly, the Commission has determined that, pursuant to 10 CFR 50.12(a), the exemption is authorized by law, will not present an undue risk to the public health and safety, and is consistent with the common defense and security. Also, special circumstances are present. Therefore, the Commission hereby grants NMC, an exemption from the requirements of 10 CFR 50.68(b)(1) for the loading, unloading, and handling of the components of the TN NUHOMS®-32PT

dry cask storage system at PNP. However, since NMC does not have an NRC-approved methodology for evaluating changes to the analyses or systems supporting this exemption request, the NRC staff's approval of the exemption is restricted to those specific design and operating conditions described in NMC's June 21, 2005, exemption request. NMC may not apply the 10 CFR 50.59 process for evaluating changes to specific exemptions. Any changes to the design or operation of (1) the dry cask storage system; (2) the SFP; (3) the fuel assemblies to be stored; (4) the boron dilution analyses; or (5) supporting procedures and controls, regardless of whether they are approved under the general Part 72 license or perceived to be conservative, will invalidate this exemption. Upon invalidation of the exemption, NMC will be required to comply with NRC regulations prior to future cask loadings.

Based upon the review of NMC's exemption request to credit soluble boron during DSC loading, unloading, and handling in PNP's SFP, the NRC staff concludes that pursuant to 10 CFR 50.12(a)(2)(iii), NMC's exemption request is acceptable. However, the NRC staff places the following limitations/conditions on the approval of this exemption:

1. This exemption is limited to the loading, unloading, and handling of the DSC for only the TN NUHOMS®-32PT at the PNP.

2. This exemption is limited to the loading, unloading, and handling in the DSC at PNP of Combustion Engineering 15 x 15 fuel assemblies, without burnable poison rod assemblies, that had maximum initial, unirradiated U–235 enrichments less than 3.6 weight percent.

3. This exemption is limited to the one-time only loading, unloading, and handling of the 7 TN NUHOMS®-32PT cask systems (224 assemblies total) scheduled for the October 2005 cask loading campaign at PNP.

4. If NMC submits a LAR by July 31, 2006, this exemption will remain in effect until such time as the NRC staff either approves or denies the LAR. In this case, the NRC staff finds it acceptable to leave the exemption in effect because it will allow NMC to unload any previously loaded cask should it become necessary. However, if NMC does not submit a license amendment by July 31, 2006, this exemption will expire, and NMC will not be able to load, unload, or handle DSCs in the SFP. In its exemption supplement, NMC committed to complete supporting criticality analyses and submit a LAR to allow credit for burnup to meet the requirements of 10 CFR 50.68(b)(1) in July 2006 or earlier.

5. During DSC loading, unloading, and handling at PNP, the SFP soluble boron concentration must be greater than or equal to 2500 ppm at all times.

Pursuant to 10 CFR 51.32, the Commission has determined that the granting of this exemption will not have a significant effect on the quality of the human environment (70 FR 57899).

This exemption is effective upon issuance.

Dated at Rockville, Maryland, this 6th day of October 2005.

For the Nuclear Regulatory Commission.

Ledyard B. Marsh,

Director, Division of Licensing Project Management, Office of Nuclear Reactor Regulation.

[FR Doc. E5–5689 Filed 10–14–05; 8:45 am]

BILLING CODE 7590–01–P

NUCLEAR REGULATORY COMMISSION

[Docket No. 50–255]

Nuclear Management Company, Palisades Plant; Notice of Correction to Individual Notice for Environmental Assessment and Finding of No Significant Impact

AGENCY: Nuclear Regulatory Commission.

ACTION: Notice of issuance; correction.

SUMMARY: This document corrects a notice appearing in the **Federal Register** on October 4, 2005 (70 FR 57899), that incorrectly referred to Dominion Nuclear Connecticut, Inc. This action is necessary to correct the erroneous information.

FOR FURTHER INFORMATION CONTACT: L. Mark Padovan, Project Manager, Office of Nuclear Reactor Regulation, U.S. Nuclear Regulatory Commission, Washington, DC 20555–0001; telephone (301) 415–1423, e-mail *lmp@nrc.gov.*

SUPPLEMENTARY INFORMATION: On page 1, the title is corrected to read from ''Dominion Nuclear Connecticut, Inc.'' to ''Nuclear Management Company.''

Dated in Rockville, Maryland, this 6th day of October 2005.

For the Nuclear Regulatory Commission.

L. Raghavan,

Chief, Section 1, Project Directorate III, Division of Licensing Project Management, Office of Nuclear Reactor Regulation.

[FR Doc. E5–5690 Filed 10–14–05; 8:45 am]

BILLING CODE 7590–01–P

OVERSEAS PRIVATE INVESTMENT CORPORATION

October 20, 2005 Public Hearing

OPIC's Sunshine Act notice of its Public Hearing in Conjunction with each Board meeting was published in the **Federal Register** (Volume 70, Number 187, Page 56746) on September 28, 2005. No requests were received to provide testimony or submit written statements for the record; therefore, OPIC's public hearing in conjunction with OPIC's October 27, 2005 Board of Directors meeting scheduled for 2 p.m. on October 20, 2005 has been cancelled.

Contact Person for Information: Information on the hearing cancellation may be obtained from Connie M. Downs at (202) 336–8438, via facsimile at (202) 218–0136, or via e-mail at *cdown@opic.gov.*

Dated: September 1, 2005.

Connie M. Downs,

OPIC Corporate Secretary.

[FR Doc. 05–20805 Filed 10–13–05; 12:10 pm]

BILLING CODE 3210–01–M

OVERSEAS PRIVATE INVESTMENT CORPORATION

Sunshine Act Meeting; Board of Directors Meeting

October 27, 2005.

TIME AND DATE: Thursday, October 27, 2005, 10 a.m. (Open Portion). 10:15 a.m. (Closed Portion).

PLACE: Offices of the Corporation, Twelfth Floor Board Room, 1100 New York Avenue, NW., Washington, DC.

STATUS: Meeting open to the Public from 10 a.m. to 10:15 a.m. closed portion will commence at 10:15 a.m. (approx.).

MATTERS TO BE CONSIDERED:

1. President's Report.

2. Testimonial.

3. Approval of September 15, 2005 Minutes (Open Portion).

FURTHER MATTERS TO BE CONSIDERED: (Closed to the Public 10:15 a.m.)

1. Insurance Project—Peru.

2. Approval of September 15, 2005 Minutes (Closed Portion).

3. Pending Major Projects.

4. Reports.

FOR FURTHER INFORMATION CONTACT: Information on the meeting may be obtained from Connie M. Downs at (202) 336–8438.

Dated: September 1, 2005.

Connie M. Downs,

Corporate Secretary, Overseas Private Investment Corporation.

[FR Doc. 05–20872 Filed 10–13–05; 3:46 am]

BILLING CODE 3210–01–M

PENSION BENEFIT GUARANTY CORPORATION

Proposed Submission of Information Collection for OMB Review; Comment Request; Qualified Domestic Relations Orders Submitted to the PBGC

AGENCY: Pension Benefit Guaranty Corporation.

ACTION: Notice of intention to request OMB approval of revisions to, and extension of, a currently approved information collection.

SUMMARY: The Pension Benefit Guaranty Corporation (''PBGC'') intends to request that the Office of Management and Budget (''OMB'') approve, under the Paperwork Reduction Act, revisions to an information collection (OMB control number 1212–0054; expires December 31, 2006) relating to model forms contained in the PBGC booklet, Divorce Orders & PBGC. (The PBGC is changing the title of the booklet to Qualified Domestic Relations Orders & PBGC.) In addition, the PBGC is requesting 3-year approval of the revised collection of information. The booklet provides guidance on how to submit a proper qualified domestic relations order (a ''QDRO'') to the PBGC. The revisions reflect changes in how the PBGC pays benefits. This notice informs the public of the PBGC's intent and solicits public comment on the collection of information.

DATES: Comments must be submitted by December 16, 2005.

ADDRESSES: Comments may be mailed to the Legislative and Regulatory Department, Pension Benefit Guaranty Corporation, 1200 K Street, NW., Washington, DC 20005–4026, or delivered to Suite 340 at that address during normal business hours. Comments also may be submitted by e-mail to *paperwork.comments@pbgc.gov*, or by fax to 202–326–4112. The PBGC will make all comments available on its Web site at *http://www.pbgc.gov*.

Copies of the collections of information may be obtained without charge by writing to the PBGC's Communications and Public Affairs Department at Suite 240 at the above address or by visiting that office or calling 202–326–4040 during normal business hours. (TTY and TDD users may call the Federal relay service toll-free at 1–800–877–8339 and ask to be connected to 202–326–4040.) The reportable events regulations, forms, and instructions may be accessed on the PBGC's Web site at *http://www.pbgc.gov*.

FOR FURTHER INFORMATION CONTACT: James L. Beller, Jr., Attorney, Legislative and Regulatory Department, Pension Benefit Guaranty Corporation, 1200 K Street, NW., Washington, DC 20005–4026, 202–326–4024. (For TTY/TDD users, call the Federal relay service toll-free at 1–800–877–8339 and ask to be connected to 202–326–4024.)

SUPPLEMENTARY INFORMATION: The PBGC intends to request paperwork approval relating to model forms contained in the PBGC booklet, Divorce Orders & PBGC. Although the collection of information has been approved by OMB under control number 1212–0054 through December 31, 2006, the PBGC is revising the model QDRO forms and accompanying guidance to reflect changes in how it pays benefits. In addition, the PBGC is changing the title of the booklet to Qualified Domestic Relations Orders & PBGC and requesting 3-year approval of the revised QDRO forms and accompanying guidance. An agency may not conduct or sponsor, and a person is not required to respond to, a collection of information unless it displays a currently valid OMB control number.

A defined benefit pension plan that does not have enough money to pay benefits may be terminated if the employer responsible for the plan faces severe financial difficulty, such as bankruptcy, and is unable to maintain the plan. In such an event, the PBGC becomes trustee of the plan and pays benefits, subject to legal limits, to plan participants and beneficiaries.

The benefits of a pension plan participant generally may not be assigned or alienated. Title I of ERISA provides an exception for domestic relations orders that relate to child support, alimony payments, or marital property rights of an alternate payee (a spouse, former spouse, child, or other dependent of a plan participant). The exception applies only if the domestic relations order meets specific legal requirements that make it a qualified domestic relations order.

When the PBGC is trustee of a plan, it reviews submitted domestic relations orders to determine whether the order is qualified before paying benefits to an alternate payee. The requirements for submitting a QDRO are established by statute. The models and the guidance assist parties by making it easier to comply with ERISA's QDRO requirements in plans trusteed by the PBGC; they do not create any additional requirements and result in a reduction of the statutory burden.

In April of 2002, the PBGC revised its regulations to make several changes in how it pays benefits, including giving participants more choices of annuity benefit forms, clarifying (for certain purposes under Title IV of ERISA) what it means to be able to ''retire'' under plan provisions, and adding rules on who will get certain payments the PBGC owes to a participant at the time of death. See 67 FR 16950, April 8, 2002. Many of these changes may affect qualified domestic relations orders submitted to the PBGC and, therefore, necessitate a number of revisions to the model QDROs and accompanying guidance.

The PBGC estimates that it will receive 875 QDROs each year from prospective alternate payees; that the average burden of preparing a QDRO with the assistance of the guidance and model QDROs in PBGC's booklet will be ¼ hour of the alternate payee's time and $734 in professional fees if the alternate payee hires an attorney or other professional to prepare the QDRO, or 10 hours of the alternate payee's time if the alternate payee prepares the QDRO without hiring an attorney or other professional; and that the total annual burden will be 1067 hours and $578,600.

The PBGC is soliciting public comments to—

- Evaluate whether the proposed collections of information are necessary for the proper performance of the functions of the agency, including whether the information will have practical utility;
- Evaluate the accuracy of the agency's estimate of the burden of the proposed collections of information, including the validity of the methodologies and assumptions used;
- Enhance the quality, utility, and clarity of the information to be collected; and
- Minimize the burden of the collections of information on those who are to respond, including through the use of appropriate automated, electronic, mechanical, or other technological collection techniques or other forms of information technology, *e.g.*, permitting electronic submission of responses.

Issued in Washington, DC, this 12th day of October, 2005.

Rick Hartt,

Chief Technology Officer, Pension Benefit Guaranty Corporation.

[FR Doc. 05–20703 Filed 10–14–05; 8:45 am]

BILLING CODE 7708–01–P

SMALL BUSINESS ADMINISTRATION

Rustic Canyon Ventures SBIC, L.P., License No. 09/79–0450, Notice Seeking Exemption Under Section 312 of the Small Business Investment Act, Conflicts of Interest

Notice is hereby given that Rustic Canyon Ventures SBIC, L.P., 2425 Olympic Blvd., Suite 6050W, Santa Monica, CA 90404, a Federal Licensee under the Small Business Investment Act of 1958, as amended (''the Act''), in connection with the financing of a small concern, has sought an exemption under Section 312 of the Act and Section 107.730, Financings which Constitute Conflicts of Interest of the Small Business Administration (''SBA'') Rules and Regulations (13 CFR 107.730 (2005)). Rustic Canyon Ventures SBIC, L.P. proposes to provide equity security financing to Intrepid Learning Solutions, Inc., 411 First Avenue South, Suite #300, Seattle WA 98104. The financing is contemplated for operating expenses and for general corporate purposes.

The financing is brought within the purview of § 107.730(a)(1) of the Regulations because Staenberg Private Capital, LLC and Staenberg Venture Partners II, L.P., both Associates of Rustic Canyon Ventures SBIC, L.P., own more than ten percent of Intrepid Learning Solutions, Inc. Therefore, Intrepid Learning Solutions, Inc., is considered an Associate of Rustic Canyon Ventures SBIC, L.P., as defined at 13 CFR 107.50 of the SBIC Regulations.

Notice is hereby given that any interested person may submit written comments on the transaction to the Associate Administrator for Investment, U.S. Small Business Administration, 409 Third Street, SW., Washington, DC 20416.

Jaime Guzman-Fournier,

Associate Administrator for Investment.

[FR Doc. 05–20638 Filed 10–14–05; 8:45 am]

BILLING CODE 8025–01–P

SMALL BUSINESS ADMINISTRATION

[Disaster Declaration # 10180 and # 10181]

Alabama Disaster Number AL–00003

AGENCY: Small Business Administration.

ACTION: Amendment 2.

SUMMARY: This is an amendment of the Presidential declaration of a major disaster for the State of Alabama (FEMA–1605–DR), dated August 29, 2005.

Incident: Hurricane Katrina.

Incident Period: August 29, 2005 and continuing through September 26, 2005.

Effective Date: September 26, 2005.

Physical Loan Application Deadline Date: October 28, 2005.

EIDL Loan Application Deadline Date: May 29, 2006.

ADDRESSES: Submit completed loan applications to: Small Business Administration, Processing and Disbursement Center, 14925 Kingsport Road, Fort Worth, TX 76155.

FOR FURTHER INFORMATION CONTACT: A. Escobar, Office of Disaster Assistance, Small Business Administration, 409 3rd Street, Suite 6050, Washington, DC 20416.

SUPPLEMENTARY INFORMATION: The notice of the President's major disaster declaration for the State of Alabama, dated August 29, 2005, is hereby amended to establish the incident period for this disaster as beginning August 29, 2005 and continuing through September 26, 2005.

All other information in the original declaration remains unchanged.

(Catalog of Federal Domestic Assistance Numbers 59002 and 59008)

Herbert L. Mitchell,

Associate Administrator for Disaster Assistance.

[FR Doc. 05–20643 Filed 10–14–05; 8:45 am]

BILLING CODE 8025–01–P

SMALL BUSINESS ADMINISTRATION

[Disaster Declaration # 10198 and # 10199]

Florida Disaster Number FL–00009

AGENCY: Small Business Administration.

ACTION: Amendment 1.

SUMMARY: This is an amendment of the Administrative declaration of a major disaster for the State of Florida, effective 9/30/2005.

Incident: Hurricane Katrina.

Incident Period: 8/25/2005.

Effective Date: 9/30/2005.

Physical Loan Application Deadline Date: 11/29/2005.

EIDL Loan Application Deadline Date: 6/14/2006.

ADDRESSES: Submit completed loan applications to: U.S. Small Business Administration, Disaster Area Office 3, 14925 Kingsport Road, Fort Worth, TX 76155.

FOR FURTHER INFORMATION CONTACT: A. Escobar, Office of Disaster Assistance, U.S. Small Business Administration, 409 3rd Street, Suite 6050, Washington, DC 20416.

SUPPLEMENTARY INFORMATION: The notice of an Administrative declaration for the State of Florida, dated 09/14/2005, is hereby amended to include the following areas as adversely affected by the disaster.

Primary Counties: Broward, Miami-Dade.
Contiguous Counties:
Florida: Hendry, Palm Beach.

All other information in the original declaration remains unchanged.

(Catalog of Federal Domestic Assistance Numbers 59002 and 59008)

Dated: September 30, 2005.

Hector V. Barreto,

Administrator.

[FR Doc. 05–20642 Filed 10–14–05; 8:45 am]

BILLING CODE 8025–01–P

SMALL BUSINESS ADMINISTRATION

[Disaster Declaration # 10205 and # 10206]

Louisiana Disaster Number LA–00004

AGENCY: Small Business Administration.

ACTION: Amendment 4.

SUMMARY: This is an amendment of the Presidential declaration of a major disaster for the State of Louisiana (FEMA–1607–DR), dated 9/24/2005.

Incident: Hurricane Rita.

Incident Period: 9/23/2005 and continuing.

Effective Date: 10/03/2005.

Physical Loan Application Deadline Date: 11/23/2005.

EIDL Loan Application Deadline Date: 6/26/2006.

ADDRESSES: Submit completed loan applications to: U.S. Small Business Administration, Processing and Disbursement Center, 14925 Kingsport Road, Fort Worth, TX 76155.

FOR FURTHER INFORMATION CONTACT: A. Escobar, Office of Disaster Assistance, U.S. Small Business Administration, 409 3rd Street, Suite 6050, Washington, DC 20416.

SUPPLEMENTARY INFORMATION: The notice of the Presidential disaster declaration for the State of Louisiana, dated 09/24/2005, is hereby amended to include the following areas as adversely affected by the disaster:

Primary Parishes: Evangeline, Jefferson,

Plaquemines, Sabine, Saint Landry.
Contiguous Parishes/Counties:
Louisiana: Avoyelles, De Soto, Orleans, Saint Bernard, Saint Tammany, Tangipahoa.
Texas: Sabine, Shelby.

All other information in the original declaration remains unchanged.

(Catalog of Federal Domestic Assistance Numbers 59002 and 59008)

Herbert L. Mitchell,

Associate Administrator for Disaster Assistance.

[FR Doc. 05–20639 Filed 10–14–05; 8:45 am]

BILLING CODE 8025–01–P

SMALL BUSINESS ADMINISTRATION

[Disaster Declaration # 10205 and # 10206]

Louisiana Disaster Number LA–00004

AGENCY: Small Business Administration.

ACTION: Amendment 3.

SUMMARY: This is an amendment of the Presidential declaration of a major disaster for the State of Louisiana (FEMA–1607–DR), dated 09/24/2005.

Incident: Hurricane Rita.

Incident Period: 09/23/2005 and continuing.

Effective Date: 09/29/2005.

Physical Loan Application Deadline Date: 11/23/2005.

EIDL Loan Application Deadline Date: 06/26/2006.

ADDRESSES: Submit completed loan applications to: U.S. Small Business Administration, Disaster Area Office 3, 14925 Kingsport Road, Fort Worth, TX 76155.

FOR FURTHER INFORMATION CONTACT: A. Escobar, Office of Disaster Assistance, U.S. Small Business Administration, 409 3rd Street, Suite 6050, Washington, DC 20416.

SUPPLEMENTARY INFORMATION: The notice of the Presidential disaster declaration for the State of Louisiana, dated 09/24/2005, is hereby amended to include the following areas as adversely affected by the disaster:

Primary Parishes: Ascension, Saint Martin, Vernon, West Baton Rouge.

Contiguous Parishes: Louisiana: East Baton Rouge, East Feliciana, Livingston, Natchitoches, Pointe Coupee, Sabine, West Feliciana.

All other information in the original declaration remains unchanged.

(Catalog of Federal Domestic Assistance Numbers 59002 and 59008)

Herbert L. Mitchell,

Associate Administrator, for Disaster Assistance.

[FR Doc. 05–20640 Filed 10–14–05; 8:45 am]

BILLING CODE 8025–01–P

SMALL BUSINESS ADMINISTRATION

[Disaster Declaration # 10203 and # 10204]

Texas Disaster Number TX–00066

AGENCY: Small Business Administration.

ACTION: Amendment 1.

SUMMARY: This is an amendment of the Presidential declaration of a major disaster for the State of Texas (FEMA–1606–DR), dated 9/24/2005.

Incident: Hurricane Rita.

Incident Period: 9/23/2005 and continuing.

Effective Date: 9/30/2005.

Physical Loan Application Deadline Date: 11/23/2005.

EIDL Loan Application Deadline Date: 6/26/2006.

ADDRESSES: Submit completed loan applications to: U.S. Small Business Administration, Disaster Area Office 3, 14925 Kingsport Road, Fort Worth, TX 76155.

FOR FURTHER INFORMATION CONTACT: A. Escobar, Office of Disaster Assistance, U.S. Small Business Administration, 409 3rd Street, Suite 6050, Washington, DC 20416.

SUPPLEMENTARY INFORMATION: The notice of the Presidential disaster declaration for the State of Texas, dated 09/24/2005, is hereby amended to include the following areas as adversely affected by the disaster:

Primary Counties: Angelina, Brazoria, Fort Bend, Harris, Montgomery, Nacogdoches, Polk, Sabine, San Augustine, San Jacinto, Shelby, Trinity, Walker.

Contiguous Counties:
Louisiana: De Soto.
Texas: Austin, Cherokee, Grimes, Houston, Madison, Matagorda, Panola, Rusk, Waller, Wharton.

All other information in the original declaration remains unchanged.

(Catalog of Federal Domestic Assistance Numbers 59002 and 59008)

Herbert L. Mitchell,

Associate Administrator for Disaster Assistance.

[FR Doc. 05–20641 Filed 10–14–05; 8:45 am]

BILLING CODE 8025–01–P

SMALL BUSINESS ADMINISTRATION

[Disaster Declaration # 10211]

Disaster # ZZ–00001; The Entire United States and U.S. Territories

AGENCY: Small Business Administration.

ACTION: Notice.

SUMMARY: This is a notice of the Military Reservist Economic Injury Disaster Loan Program (MREIDL), dated October 1, 2005.

Effective Date: October 1, 2005.

MREIDL Loan Application Deadline Date: 90 days after the essential employee is discharged or released from active duty.

ADDRESSES: Submit completed loan applications to: Small Business Administration, Processing and Disbursement Center, 14925 Kingsport Road, Fort Worth, TX 76155.

FOR FURTHER INFORMATION CONTACT: A. Escobar, Office of Disaster Assistance, Small Business Administration, 409 3rd Street, Suite 6050, Washington, DC 20416.

SUPPLEMENTARY INFORMATION: Notice is hereby given that as a result of Public Law 106–50, the Veterans Entrepreneurship and Small Business Development Act of 1999, this notice establishes the application filing period for the Military Reservist Economic Injury Disaster Loan Program.

Effective October 1, 2005, small businesses employing military reservists may apply for economic injury disaster loans if those employees are called up to active duty during a period of military conflict existing on or after March 24, 1999 and those employees are essential to the success of the small business daily operations.

The purpose of the Military Reservist Economic Injury Disaster Loan Program (MREIDL) is to provide funds to eligible small businesses to meet its ordinary and necessary operating expenses that it could have met, but is unable to meet, because an essential employee was called-up to active duty in their role as a military reservist. These loans are intended only to provide the amount of working capital needed by a small business to pay its necessary obligations as they mature until operations return to normal after the essential employee is released from active duty.

Applications for the Military Reservist Economic Injury Disaster Loan Program may be filed at the address listed above or other locally announced locations.

The Interest Rate for eligible small businesses is 4.000.

The number assigned is 10211 0.

(Catalog of Federal Domestic Assistance Number 59002)

Herbert L. Mitchell,

Associate Administrator for Disaster Assistance.

[FR Doc. 05–20644 Filed 10–14–05; 8:45 am]

BILLING CODE 8025–01–P

SMALL BUSINESS ADMINISTRATION

Public Federal Regulatory Enforcement Fairness Hearing, Region II Regulatory Fairness Board

The U.S. Small Business Administration (SBA) Region II Regulatory Fairness Board and the SBA Office of the National Ombudsman will hold a public hearing on Wednesday, October 26, 2005, at 9 a.m. The meeting will take place at the New Jersey District Office, 2 Gateway Center, 15th Floor, Newark, NJ to receive comments and testimony from small business owners, small government entities, and small non-profit organizations concerning regulatory enforcement and compliance actions taken by Federal agencies.

Anyone wishing to attend or to make a presentation must contact Claudia Yarborough, in writing or by fax, in order to be put on the agenda. Claudia Yarborough, Paralegal Specialist, SBA, New Jersey District Office, 2 Gateway Center, 15th Floor, New Jersey, NJ 07102–5003, phone (973) 645–3974, fax (202) 481–0830, e-mail: *Claudia.Yarborough@sba.gov.*

For more information, see our Web site at *http://www.sba.gov/ombudsman.*

Matthew K. Becker,

Committee Management Officer.

[FR Doc. 05–20665 Filed 10–14–05; 8:45am]

BILLING CODE 8025–01–M

SOCIAL SECURITY ADMINISTRATION

Privacy Act of 1974; as Amended

Alteration to Existing Systems of Records

AGENCY: Social Security Administration (SSA)

ACTION: Altered systems of records.

SUMMARY: In accordance with the Privacy Act (5 U.S.C. 552a (e)(4)), we are issuing public notice of our intent to alter and make minor housekeeping changes to two existing systems of records, the Working File of the Appeals Council, HHS/SSA/OHA, 09–60–0004, and the Administrative Law Judge Working File on Claimant Cases System, HHS/SSA/OHA, 09–60–0005, hereinafter referred to as the ALJ Working File, as follows:

- Expansion of the record storage medium in each system of records to include the maintenance of records in electronic form;
- Housekeeping changes that will result in corrections in the systems of records reference number;
- System name;
- Notification procedures;
- Record access procedures; and
- Contesting records procedures.

We also propose to make housekeeping changes to the SSA Litigation Tracking System, HHS/SSA/LS, 09–60–0186 system of records to more accurately reflect the current functions of that system. The proposed changes will include corrections to the following sections of the notice of the SSA Litigation Tracking system of records:

- Systems of records reference number;
- System name;
- Notification procedures;
- Record access procedures;
- Contesting record procedures; and
- System manager.

The proposed alteration and housekeeping changes are discussed in the Supplementary Information section below. We invite public comments on this proposal.

DATES: We filed a report of the proposed altered systems of records with the Chairman of the Senate Committee on Homeland Security and Governmental Affairs, the Chairman of the House Committee on Government Reform, and the Director, Office of Information and Regulatory Affairs, Office of Management and Budget (OMB) on October 5, 2005. The proposed altered systems of records will become effective on November 14, 2005 unless we receive comments that would result in a contrary determination.

ADDRESSES: Interested individuals may comment on this publication by writing to the Executive Director, Office of Public Disclosure, Office of the General Counsel, Social Security Administration, 3–A–6 Operations Building, 6401 Security Boulevard, Baltimore, Maryland 21235–6401. All comments received will be available for public inspection at the above address.

FOR FURTHER INFORMATION CONTACT: Ms. Christine W. Johnson, Lead Social Insurance Specialist, Strategic Issues Team, Office of Public Disclosure, Office of the General Counsel, Social Security Administration, Room 3–A–6 Operations Building, 6401 Security Boulevard, Baltimore, Maryland 21235–6401, telephone at (410) 965–8563, e-mail: *chris.w.johnson@ssa.gov.*

SUPPLEMENTARY INFORMATION:

I. Background and Purpose of Proposed Alteration to the ALJ Working File and Working File of the Appeals Council Systems of Records

A. General Background

Under Titles II and XVI of the Social Security Act, an individual who has received a partly or wholly unfavorable determination on a claim for benefits has a right to a hearing before an Administrative Law Judge (ALJ). An individual also has a right to an Appeals Council (AC) review of the ALJ's decision.

During the course of adjudicating the claim at the hearing level, ALJs and their staffs may make notes regarding the evidence, testimony, legal theories, merits of the case, and opinions and advice regarding other factors involved in the case. ALJs also generally prepare written instructions to the staff attorney and other personnel regarding case decisions and amendments. These notes are maintained in the ALJ Working File. The notes are used by ALJs and their staffs during the process of disposing of cases on administrative appeal.

In the course of a review at the AC level, communications between the Administrative Appeals Judges (AAJ) and their staffs may include written instructions and opinions, memoranda, case analyses, physician opinions from the AC's Medical Support Staff, draft decisions or orders, and communications prepared by SSA attorneys in the Office of the General Counsel and attorneys in the Department of Justice. These notes are maintained in the Working File of the Appeals Council and are used by the AAJs and their staffs to dispose of cases at the AC review level.

B. Discussion of Proposed Alteration to the ALJ Working File and Working File of the Appeals Council Systems of Records

Currently, the records in these systems of records are maintained in paper form. The purpose of the alteration is to expand the record storage medium to include records in electronic form. The proposed alteration will align these systems with SSA's E-Government initiative to transition paper-based, program functions into the electronic environment.

II. Records Storage Medium and Safeguards for the Information Maintained in the Proposed Altered ALJ Working File and Working File of the Appeals Council Systems of Records

The ALJ Working File and Working File of the Appeals Council systems of records will maintain information in paper and electronic form. Only authorized hearing office and Appeals Council personnel that have a need for the information in the performance of their official duties are permitted access to the information. Security measures include the use of access codes to enter

the computer system that will maintain the data, and storage of the computerized records in secured areas that are accessible only to employees who require the information in performing their official duties. Manually maintained records are kept in locked cabinets or in otherwise secure areas.

III. Effect of the Proposed Alteration to the ALJ Working File and Working File of the Appeals Council Systems of Records on the Rights of Individuals

The proposed alteration to the ALJ Working File and the Working File of the Appeals Council systems of records pertains to SSA's responsibilities in expanding the record storage medium to accommodate the maintenance of records in electronic form. We will adhere to all applicable statutory requirements, including those under the Social Security Act and the Privacy Act, in carrying out our responsibilities. Therefore, we do not anticipate that the proposed alteration to these systems will have an unwarranted adverse effect on the rights of individuals.

IV. Minor Housekeeping Changes in the ALJ Working File, Working File of the Appeals Council, and SSA Litigation Tracking Systems of Records

When these systems of records were last published, SSA was a part of the Department of Health and Human Services (DHHS). The Social Security Administration became an independent agency in August 1994; therefore, the following changes concerning DHHS are in compliance with legislative changes. (See Pub. L. 103–296).

1. ALJ Working File and Working File of the Appeals Council Systems of Records

(a) We have revised the numbering system of the ALJ Working File and Working File of the Appeals Council systems of records by changing the identification reference numbers from ''09–60–0004,'' and ''09–60–0005,'' to ''60–0004,'' and ''60–0005,'' respectively. The ''09'' digits referenced these systems of records as HHS systems of records.

(b) System name—we have revised this section in the ALJ Working File, Working File of the Appeals Council systems of records by deleting any reference to the DHHS.

(c) Notification procedures, Record access procedures, and Contesting records procedures—we have revised these sections in the *ALJ Working File and Working File of the Appeals Council* systems of records by deleting any reference to DHHS regulations.

2. SSA Litigation Tracking System of Records

(a) We have revised the numbering system of the SSA Litigation Tracking system of records by changing the identification reference number from ''09–60–0186,'' to ''60–0186''. The ''09'' digits referenced the system of records as an HHS system of records.

(b) System name—we have revised this section in the SSA Litigation Tracking system of records by deleting any reference to the DHHS and ''SSA/LS'' due to changes in the legislation and organizational changes within SSA. We have also corrected the system name to the Civil Action Tracking System to appropriately reflect current system functions. (See the System name in the Notice below).

(c) Notification procedures, Record access procedures, and Contesting records procedures—we have revised these sections in the SSA Litigation Tracking systems of records by deleting any reference to DHHS regulations.

(d) System manager—we have revised this section in the SSA Litigation Tracking system of record to reflect the name of the SSA component having substantive responsibility for the system of records. (See the System manager name section in the notice below).

Dated: October 5, 2005.

Jo Anne B. Barnhart,

Commissioner.

SYSTEM NUMBER: 60–0004

SYSTEM NAME:

Working File of the Appeals Council, Social Security Administration, Office of Hearings and Appeals.

SECURITY CLASSIFICATION:

None.

SYSTEM LOCATION:

Social Security Administration, Office of Hearings and Appeals, 5107 Leesburg Pike, Falls Church, Va. 22041.

CATEGORIES OF INDIVIDUALS COVERED BY THE SYSTEM:

Claimants–Title II (Retirement and Survivors Insurance (RSI) and Disability Insurance (DI); Title VIII (Special Veterans Benefits); Title XI (claimants subject to Professional Standards Review); Title XVI (Supplemental Security Income (SSI); and Title XVIII (Hospital Insurance (HI). Effective October 1, 2005, SSA only has jurisdiction to determine eligibility for Title XVIII benefits, not the benefit amount.

CATEGORIES OF RECORDS IN THE SYSTEM:

This file generally contains: Hearing and Appeals analyst's recommendation to the Appeals Council (AC); a copy of the Administrative Law Judge (ALJ) decision or dismissal; a copy of the Request for Review by the AC form; requests to Medical Support Staff for comments and their responses, if not entered into the record; copies of AC actions on the case; notice of denial of request for review, notice of granting review, AC decisions; and copies of transcripts when available.

AUTHORITY FOR MAINTENANCE OF THE SYSTEM:

Sections 205 and 1631(d)(1) of the Social Security Act, as amended.

PURPOSE(S):

This system of records is established to be an internal working file used in connection with a recommendation to, or action by, the AC in an individual case. Members of the AC and their support staff use the file when working on cases on appeal. Where a favorable AC decision is issued, the records are used to process representative fees.

ROUTINE USES OF RECORDS MAINTAINED IN THE SYSTEM, INCLUDING CATEGORIES OF USERS AND THE PURPOSES OF SUCH USES: DISCLOSURE MAY BE MADE FOR ROUTINE USES AS INDICATED BELOW:

1. To a congressional office in response to an inquiry from that office made at the request of the subject of a record.

2. To DOJ, a court or other tribunal, or another party before such tribunal when:

(a) SSA, any component thereof; or

(b) any SSA employee in his/her official capacity; or

(c) any SSA employee in his/her individual capacity where DOJ (or SSA where it is authorized to do so) has agreed to represent the employee; or

(d) the United States or any agency thereof where SSA determines that the litigation is likely to affect the operations of SSA or any of its components, is a party to litigation or has an interest in such litigation, and SSA determines that the use of such records by DOJ, the court or other tribunal is relevant and necessary to the litigation, provided, however, that in each case, SSA determines that such disclosure is compatible with the purpose for which the records were collected.

However, any other information defined as ''return or return information'' under 26 U.S.C. § 6103 of the Internal Revenue Code (IRC) will not be made unless authorized by the IRC, the Internal Revenue Service (IRS), or IRS regulations.

3. To IRS, as necessary, for the purpose of auditing SSA's compliance

with safeguard provisions of the IRC of 1986, as amended.

4. Information may be disclosed to contractors and other Federal agencies, as necessary, for the purpose of assisting SSA in the efficient administration of its programs. We contemplate disclosing information under this routine use only in situations in which SSA may enter into a contractual or similar agreement with a third party to assist in accomplishing an agency function relating to this system of records.

5. Non-tax return information which is not restricted from disclosure by Federal law may be disclosed to the General Services Administration (GSA) and the National Archives and Records Administration (NARA) under 44 U.S.C. 2904 and 2906, as amended by the NARA Act of 1984, for the use of those agencies in conducting records management studies.

6. To student volunteers and other workers, who technically do not have the status of Federal employees, when they are performing work for SSA as authorized by law, and they need access to personally identifiable information in SSA records in order to perform their assigned Agency functions.

POLICIES AND PRACTICES FOR STORING, RETRIEVING, ACCESSING, RETAINING AND DISPOSING OF RECORDS IN THE SYSTEM:

STORAGE:

Records are maintained in paper and electronic form (*e.g.*, paper folder files on filing shelves or electronically on disc).

RETRIEVABILITY:

Records are retrieved by Social Security number (SSN) or name.

SAFEGUARDS:

System security is maintained in accordance with the Systems Security Handbook. Access to and use of both paper and electronic records is limited to those persons whose official duties require such access. All employees are instructed in SSA confidentiality rules as part of their initial orientation training.

Records maintained in paper form are kept in locked file cabinets or in otherwise secure areas. In many cases records are selected for the employees needing access to them by other employees who are specifically charged with the maintenance of the records. This safeguard restricts the number of persons authorized to be in the storage areas and facilitates control over the access to the information contained in the records to those who need it.

For computerized records, electronically transmitted between SSA's central office and field office locations, safeguards include a lock/unlock password system, exclusive use of leased telephone lines, a terminal oriented transaction matrix and an audit trail. Access *http://www.ssa.gov/foia/bluebook/app_g.htm* for additional information regarding the safeguards SSA employs to protect its paper and automated records.

RETENTION AND DISPOSAL:

One year after final AC action, paper and electronic records will be shredded and/or deleted as appropriate.

SYSTEM MANAGER(S) AND ADDRESS:

Associate Commissioner, Office of Hearings and Appeals, Social Security Administration, 5107 Leesburg Pike, Falls Church, Va. 22041.

NOTIFICATION PROCEDURES:

An individual can determine if this system contains a record about him/her by writing to the system manager(s) at the above address and providing his/her name, SSN or other information that may be in the system of records that will identify him/her. An individual requesting notification of records in person should provide the same information, as well as provide an identity document, preferably with a photograph, such as a driver's license or some other means of identification, such as a voter registration card or credit card. If an individual does not have any identification documents sufficient to establish his/her identify, the individual must certify in writing that he/she is the person claimed to be and that he/she understands that the knowing and willful request for, or acquisition of, a record pertaining to another individual under false pretenses is a criminal offense.

If notification is requested by telephone, an individual must verify his/her identity by providing identifying information that parallels the record to which notification is being requested. If it is determined that the identifying information provided by telephone is insufficient, the individual will be required to submit a request in writing or in person. If an individual is requesting information by telephone on behalf of another individual, the subject individual must be connected with SSA and the requesting individual in the same phone call. SSA will establish the subject individual's identity (his/her name, SSN, address, date of birth and place of birth along with one other piece of information such as mother's maiden name) and ask for his/her consent in providing information to the requesting individual.

If a request for notification is submitted by mail, an individual must include a notarized statement to SSA to verify his/her identity or must certify in the request that he/she is the person claimed to be and that he/she understands that the knowing and willful request for, or acquisition of, a record pertaining to another individual under false pretenses is a criminal offense. These procedures are in accordance with SSA Regulations (20 CFR 401.40).

RECORD ACCESS PROCEDURES:

Same as Notification procedures. Requesters should also reasonably specify the record contents being sought. These procedures are in accordance with SSA Regulations (20 CFR 401.40(c)).

CONTESTING RECORD PROCEDURES:

Same as Notification procedures. Requesters should also reasonably identify the record, specify the information they are contesting and state the corrective action sought and the reasons for the correction with supporting justification showing how the record is incomplete, untimely, inaccurate or irrelevant. These procedures are in accordance with SSA Regulations (20 CFR 401.65(a)).

RECORD SOURCE CATEGORIES:

Claimants, their representatives, appropriate members of the public, SSA and other Federal, State and local agencies.

Systems Exempted from Certain Provisions of the Privacy Act:

None.

SYSTEM NUMBER: 60–0005

SYSTEM NAME:

ALJ Working File, Social Security Administration, Office of Hearings and Appeals.

SECURITY CLASSIFICATION:

None.

SYSTEM LOCATION:

Local hearing offices. Access *http://www.ssa.gov/foia/bluebook/app_f.htm* for address information.

CATEGORIES OF INDIVIDUALS COVERED BY THE SYSTEM:

Claimants—Title II (Retirement and Survivors Insurance (RS) and Disability Insurance (DI)); Title VIII (Special Veterans Benefits); Title XI (claimants subject to Professional Standards Review); Title XVI (Supplemental Security Insurance (SSI)); and Title XVIII (Hospital Insurance (HI)). Effective October 1, 2005 SSA only has jurisdiction to determine eligibility for

Title XVIII benefits, not the benefit amount.

CATEGORIES OF RECORDS IN THE SYSTEM:

These files are established in the hearing office as a record of actions taken on each particular case. The file may contain copies of the Notice of Hearing, Decision on Dismissal, and the Exhibit List when one is prepared, a copy of congressional inquiries and responses thereto as well as copies of post-adjudicative material received and any responses made, but not official copies, which are placed in claim folders. These files also usually contain working papers such as notes taken during the hearing by the Administrative Law Judge (ALJ); case analyses prepared by hearing office employees; case file cover sheets and other developmental and/or instructional sheets.

AUTHORITY FOR MAINTENANCE OF THE SYSTEM:

Sections 205 and 1631(d)(1) of the Social Security Act, as amended.

PURPOSE(S):

This system is used to reference the actions taken in a particular case at the hearing level. The ALJ or hearing office staff uses the information to reply to future correspondence.

ROUTINE USES OF RECORDS MAINTAINED IN THE SYSTEM, INCLUDING CATEGORIES OF USERS AND THE PURPOSES OF SUCH USES:

Disclosure may be made for routine uses as indicated below:

1. To a congressional office in response to an inquiry from that office made at the request of the subject of a record.

2. To DOJ, a court or other tribunal, or another party before such tribunal when:

(a) SSA, any component thereof; or

(b) any SSA employee in his/her official capacity; or

(c) any SSA employee in his/her individual capacity where DOJ (or SSA where it is authorized to do so) has agreed to represent the employee; or

(d) the United States or any agency thereof where SSA determines that the litigation is likely to affect the operations of SSA or any of its components, is a party to litigation or has an interest in such litigation, and SSA determines that the use of such records by DOJ, the court or other tribunal is relevant and necessary to the litigation, provided, however, that in each case, SSA determines that such disclosure is compatible with the purpose for which the records were collected.

However, any information defined as ''return or return information'' under 26 U.S.C. 6103 of the Internal Revenue Code (IRC) will not be made unless authorized by the IRC, the Internal Revenue Service (IRS), or IRS regulations.

3. To IRS, as necessary, for the purpose of auditing SSA's compliance with safeguard provisions of the IRC of 1986, as amended.

4. Information may be disclosed to contractors and other Federal agencies, as necessary, for the purpose of assisting SSA in the efficient administration of its programs. We contemplate disclosing information under this routine use only in situations in which SSA may enter into a contractual or similar agreement with a third party to assist in accomplishing an agency function relating to this system of records.

5. Non-tax return information which is not restricted from disclosure by Federal law may be disclosed to the General Services Administration (GSA) and the National Archives and Records Administration (NARA) under 44 U.S.C. 2904 and 2906, as amended by the NARA Act of 1984, for the use of those agencies in conducting records management studies.

6. To student volunteers and other workers, who technically do not have the status of Federal employees, when they are performing work for SSA as authorized by law, and they need access to personally identifiable information in SSA records in order to perform their assigned Agency functions.

7. To Federal, State, and local law enforcement agencies and private security contractors, as appropriate, if information is necessary—

(a) To enable them to protect the safety of SSA employees and customers, the security of the SSA workplace and the operation of SSA facilities, or

(b) To assist investigations or prosecutions with respect to activities that affect such safety and security or activities that disrupt the operation of SSA facilities.

POLICIES AND PRACTICES FOR STORING, RETRIEVING, ACCESSING, RETAINING AND DISPOSING OF RECORDS IN THE SYSTEM:

STORAGE:

Records in this system are maintained in paper and electronic form (*e.g.*, paper folder files on filing shelves or electronically on disc).

RETRIEVABILITY:

Records are indexed and retrieved alphabetically by claimants' names in paper form and may be retrieved by claimant name and social security number (SSN) electronically.

SAFEGUARDS:

System security is maintained in accordance with the Systems Security Handbook. Access to and use of both paper and electronic records are limited to those persons whose official duties require such access. All employees are instructed in SSA confidentiality rules as part of their initial orientation training.

Records maintained in paper form are kept in locked file cabinets or in otherwise secure areas. In many cases records are selected for the employees needing access to them by other employees who are specifically charged with the maintenance of the records. This safeguard restricts the number of persons authorized to be in the storage areas and facilitates control over the access to the information contained in the records to those who need it.

For computerized records, electronically transmitted between SSA's central office and field office locations, safeguards include a lock/unlock password system, exclusive use of leased telephone lines, a terminal oriented transaction matrix and an audit trail. Access *http://www.ssa.gov/foia/bluebook/app_g.htm* for additional information regarding the safeguards SSA employs to protect its paper and automated records.

RETENTION AND DISPOSAL:

Paper records are destroyed by shredding 2 years after the final action is taken. Electronic records are destroyed by deletion 2 years after the final action is taken.

SYSTEM MANAGER(S) AND ADDRESS:

Associate Commissioner, Office of Hearings and Appeals, Social Security Administration, 5107 Leesburg Pike, Falls Church, VA 22041.

NOTIFICATION PROCEDURES:

An individual can determine if this system contains a record about him/her by writing to the hearing office (access *http://www.ssa.gov/foia/bluebook/app_f.htm* for address information).

An individual can also determine if this system contains a record about him/her by writing to the system manager(s) at the above address and providing his/her name, SSN or other information that may be in the system of records that will identify him/her. An individual requesting notification of records in person should provide the same information, as well as provide an identity document, preferably with a photograph, such as a driver's license or some other means of identification, such as voter registration card, credit card, etc. If an individual does not have any

identification documents sufficient to establish his/her identify, the individual must certify in writing that he/she is the person claimed to be and that he/she understands that the knowing and willful request for, or acquisition of, a record pertaining to another individual under false pretenses is a criminal offense.

If notification is requested by telephone, an individual must verify his/her identity by providing identifying information that parallels the record to which notification is being requested. If it is determined that the identifying information provided by telephone is insufficient, the individual will be required to submit a request in writing or in person. If an individual is requesting information by telephone on behalf of another individual, the subject individual must be connected with SSA and the requesting individual in the same phone call. SSA will establish the subject individual's identity (his/her name, SSN, address, date of birth and place of birth along with one other piece of information such as mother's maiden name) and ask for his/her consent in providing information to the requesting individual.

If a request for notification is submitted by mail, an individual must include a notarized statement to SSA to verify his/her identity or must certify in the request that he/she is the person claimed to be and that he/she understands that the knowing and willful request for, or acquisition of, a record pertaining to another individual under false pretenses is a criminal offense. These procedures are in accordance with SSA Regulations (20 CFR 401.40).

RECORD ACCESS PROCEDURES:

Same as Notification procedures. Requesters should also reasonably specify the record contents being sought. These procedures are in accordance with SSA Regulations (20 CFR 401.40(c)).

CONTESTING RECORD PROCEDURES:

Same as Notification procedures. Requesters should also reasonably identify the record, specify the information they are contesting and state the corrective action sought and the reasons for the correction with supporting justification showing how the record is incomplete, untimely, inaccurate or irrelevant. These procedures are in accordance with SSA Regulations (20 CFR 401.65(a)).

RECORD SOURCE CATEGORIES:

Claimants, their representatives, appropriate members of the public, SSA and other Federal, State and local agencies.

SYSTEMS EXEMPTED FROM CERTAIN PROVISIONS OF THE PRIVACY ACT:

None.

SYSTEM NUMBER: 60–0186

SYSTEM NAME:

Civil Action Tracking System.

SECURITY CLASSIFICATION:

None.

SYSTEM LOCATION:

Social Security Administration, Office of the General Counsel, 6401 Security Blvd., Baltimore, MD 21235.

CATEGORIES OF INDIVIDUALS COVERED BY THE SYSTEM:

Individuals who are involved, as plaintiffs, in class action litigation concerning one or more of the programs administered by the Social Security Administration (SSA), who are affected by an Acquiescence Ruling (AR). When SSA determines that a holding in a Circuit Court decision conflicts with our interpretation of a provision of the Social Security Act or regulation, SSA issues an AR. When we publish an AR, we send notices to those individuals whose claims may be affected. The notice tells the claimant that an AR may affect a prior decision. In this regard, the Civil Action Tracking System (CATS) contains a given claimant's Social Security number (SSN), name and address, and maintains a list of those claimants possibly affected by the AR.

CATEGORIES OF RECORDS IN THE SYSTEM:

Records for individuals involved in the class action contain beneficiary and claims-related information from SSA's Master Beneficiary Record (MBR) and/or the Supplemental Security Income Record (SSR). During the lifetime of the implementation of the court order, the records will also contain information about notices sent, reply forms received, alerts generated, class membership screenings and decisions. With respect to an AR, as mentioned above, CATS contains basic information (*e.g.*, SSN, name and address) that came from one of SSA's master files or was typed into CATS in the case of a walk-in.

AUTHORITY FOR MAINTENANCE OF THE SYSTEM:

Section 205(a) of the Social Security Act (42 U.S.C. 405(a)).

PURPOSE(S):

Records in this system are used by staff in various SSA offices to implement court orders and settlement agreements related to class actions.

From an AR standpoint, we use CATS to store addresses to send notices to claimants affected by an AR.

ROUTINE USES OF RECORDS MAINTAINED IN THE SYSTEM, INCLUDING CATEGORIES OF USERS AND THE PURPOSES OF SUCH USES:

Disclosure may be made for routine uses as indicated below:

1. To a congressional office in response to an inquiry from that office about an individual claimant made at the request of the subject of a record.

2. To DOJ, a court or other tribunal, or another party before such tribunal when:

(a) SSA, or any component thereof; or

(b) any SSA employee in his/her official capacity; or

(c) any SSA employee in his/her individual capacity where DOJ (or SSA where it is authorized to do so) has agreed to represent the employee; or

(d) the United States or any agency thereof where SSA determines that the litigation is likely to affect the operations of SSA or any of its components, is a party to litigation or has an interest in such litigation, and SSA determines that the use of such records by DOJ, the court or other tribunal is relevant and necessary to the litigation, provided, however, that in each case, SSA determines that such disclosure is compatible with the purpose for which the records were collected.

However, any information defined as ''return or return information'' under 26 U.S.C. 6103 of the Internal Revenue Code (IRC) will not be made unless authorized by the IRC, the Internal Revenue Service (IRS), or IRS regulations.

3. To IRS, as necessary, for the purpose of auditing SSA's compliance with the safeguard provisions of the Internal Revenue Code (IRC) of 1986, as amended.

4. Non-tax return information which is not restricted from disclosure by Federal law may be disclosed to the General Services Administration (GSA) and the National Archive and Records Administration (NARA) for the purpose of conducting records management studies with respect to their duties and responsibilities under 44 U.S.C. 2904 and 2906, as amended by NARA Act of 1984.

5. To student volunteers and other workers, who technically do not have the status of Federal employees, when they are performing work for SSA as authorized by law, and they need access to personally identifiable information in SSA records to perform their assigned Agency functions.

POLICIES AND PRACTICES FOR STORING, RETRIEVING, ACCESSING, RETAINING, AND DISPOSING OF RECORDS IN THE SYSTEM:

STORAGE:

Records are maintained on mainframe computer disk and cartridges. Occasionally, there may be paper copies of small amounts of data.

RETRIEVABILITY:

The records are retrieved by the Beneficiary's SSN, last name, and date of birth.

SAFEGUARDS:

Files in this system are maintained in SSA's secure computer center and occasionally in paper form in desks or file cabinets that lock. Access to the files is limited to employees who require the files to perform their duties. All personnel having access to the records have been informed of criminal sanctions for unauthorized disclosure of information relating to individuals. Access *http://www.ssa.gov/foia/bluebook/app_g.htm* for additional information regarding the safeguards SSA employs to protect its paper and automated.

RETENTION AND DISPOSAL:

Records are archived on mainframe computer cartridges when the implementation of the court order is completed. The cartridges are stored indefinitely in a secured location.

SYSTEM MANAGER(S) AND ADDRESS:

Director, Management Information and Process Analysis Staff, Office of the General Counsel, Social Security Administration, 6401 Security Boulevard, Baltimore, MD 21235.

NOTIFICATION PROCEDURES:

An individual can determine if this system contains a record about him/her by writing to the systems manager(s) at the above address and providing his/her name, SSN or other information that may be in the system of records that will identify him/her. An individual requesting notification of records in person should provide the same information, as well as provide an identity document, preferably with a photograph, such as a driver's license or some other means of identification, such as a voter registration card, credit card, etc. If an individual does not have any identification documents sufficient to establish his/her identity, the individual must certify in writing that he/she is the person claimed to be and that he/she understands that the knowing and willful request for, or acquisition of, a record pertaining to another individual under false pretenses is a criminal offense.

If notification is requested by telephone, an individual must verify his/her identity by providing identifying information that parallels the record to which notification is being requested. If it is determined that the identifying information provided by telephone is insufficient, the individual will be required to submit a request in writing or in person. If an individual is requesting information by telephone on behalf of another individual, the subject individual must be connected with SSA and the requesting individual in the same phone call. SSA will establish the subject individual's identity (his/her name, SSN, address, date of birth and place of birth along with one other piece of information such as mother's maiden name) and ask for his/her consent in providing information to the requesting individual.

If a request for notification is submitted by mail, an individual must include a notarized statement to SSA to verify his/her identity or must certify in the request that he/she is the person claimed to be and that he/she understands that the knowing and willful request for, or acquisition of, a record pertaining to another individual under false pretenses is a criminal offense. These procedures are in accordance with SSA Regulations (20 CFR 401.40).

RECORD ACCESS PROCEDURES:

Same as notification procedures. Requesters should also reasonably specify the record contents being sought. These procedures are in accordance with SSA Regulations (20 CFR 401.40(c)).

CONTESTING RECORD PROCEDURES:

Same as notification procedures. Requesters should also reasonably identify the record, specify the information being contested and state the corrective action sought and the reasons for the correction with supporting justification showing how the record is untimely, incomplete, inaccurate or irrelevant. These procedures are in accordance with SSA Regulations (20 CFR 401.65(a)).

RECORD SOURCE CATEGORIES:

Systems of records maintained by SSA such as the Claims Folders System, 60–0089; Master Beneficiary Record, 60–0090; Supplement Security Income Record and Special Veterans Benefits 60–0103.

SYSTEMS EXEMPTED FROM CERTAIN PROVISIONS OF THE PRIVACY ACT:

None.

[FR Doc. 05–20696 Filed 10–14–05; 8:45 am]

BILLING CODE 4191–02–P

DEPARTMENT OF STATE

[Public Notice 5207]

60-Day Notice of Proposed Information Collection: Department of State Forms DS–98 and DS–99; Application for Diplomatic Exemption Form; OMB Control Number 1405–0069

ACTION: Notice of request for public comments.

SUMMARY: The Department of State is seeking Office of Management and Budget (OMB) approval for the information collection described below. The purpose of this notice is to allow 60 days for public comment in the **Federal Register** preceding submission to OMB. We are conducting this process in accordance with the Paperwork Reduction Act of 1995.

- Title of Information Collection: Application for Diplomatic Exemption From Taxes.
- OMB Control Number: 1405–0069.
- Type of Request: Extension of an approved collection.
- Originating Office: Bureau of Diplomatic Security, Office of Foreign Missions, Diplomatic Tax and Customs Office, DS/OFM/VTC/TC.
- Form Number: DS–98 & DS–99.
- Respondents: Eligible foreign diplomatic or consular missions, certain foreign government organizations, and designated international organizations.
- Estimated Number of Respondents: 350.
- Estimated Number of Responses: Approximately 2419.
- Average Hours Per Response: 15 minutes.
- Total Estimated Burden: 605 hours.
- Frequency: On occasion.
- Obligation to Respond: Required to obtain or retain a benefit.

DATES: The Department will accept comments from the public up to 60 days from October 17, 2005.

ADDRESSES: You may submit comments by any of the following methods:

- E-mail: *ofmcustomerservice@state.gov.* You must include the DS form number, information collection title, and OMB control number in the subject line of your message.
- Mail (paper, disk, or CD–ROM submissions): Office of Foreign Missions, International Place, NW., U.S.

Department of State, Washington, DC, 20008.

FOR FURTHER INFORMATION CONTACT: Direct requests for additional information regarding the collection listed in this notice, including requests for copies of the proposed information collection and supporting documents, to Ms. Irina Kaufman, DS/OFM/VTC, 3507 International Place, NW., U.S. Department of State, Washington, DC, 20008, who may be reached on 202–895–3683, or by e-mail at *kaufmani@state.gov.*

SUPPLEMENTARY INFORMATION: We are soliciting public comments to permit the Department to:

- Evaluate whether the proposed information collection is necessary for the proper performance of our functions.
- Evaluate the accuracy of our estimate of the burden of the proposed collection, including the validity of the methodology and assumptions used.
- Enhance the quality, utility, and clarity of the information to be collected.
- Minimize the reporting burden on those who are to respond, including the use of automated collection techniques or other forms of technology.

Abstract of proposed collection: Exemption from taxes on the use of public utilities and the purchase of gasoline and other motor fuels is enjoyed by foreign diplomatic and consular personnel on assignment in the United States under the provisions of the Vienna Conventions on Diplomatic and Consular Relations and the terms of various bilateral agreements. Under the Foreign Missions Act of 1982 (as amended), 22 U.S.C. 4301 et seq., the Department of State's Office of Foreign Missions (OFM) is given the authority to grant privileges and benefits, based on reciprocity. Forms DS–98, ''Application for Diplomatic Exemption From Taxes on Utilities'', and DS–99, ''Application for Diplomatic Exemption From Taxes on Gasoline'', provide OFM with the necessary information to provide and administer the benefit effectively and efficiently.

Methodology: Paper copies of the DS–98 and DS–99 are either hand carried or mailed to OFM. Foreign missions can access both forms on the OFM Web site in Portable Document Format (PDF), which provides a data-input and print feature for clean and legible paper copies. An electronic submission option is expected to be made available to respondents in October of 2005.

John R. Arndt,

Acting Deputy Assistant Secretary of State and Deputy Director, Office of Foreign Missions, Bureau of Diplomatic Security, Department of State.

[FR Doc. 05–20702 Filed 10–14–05; 8:45 am]

BILLING CODE 4710–43–P

DEPARTMENT OF TRANSPORTATION

Office of the Secretary

Privacy Act of 1974: System of Records

AGENCY: Office of the Secretary, DOT.

ACTION: Notice to establish a system of records.

SUMMARY: DOT intends to establish a system of record under the Privacy Act of 1974.

DATES: This notice will be effective, without further notice, on November 28, 2005, unless modified by a subsequent notice to incorporate comments received by the public. Comments must be received by November 16, 2005 to be assured consideration.

ADDRESSES: Send comments to Steven Lott, Departmental Privacy Officer, United States Department of Transportation, Office of the Secretary, 400 7th Street, SW., Room 6106, Washington DC 20590 or *Steven.Lott@dot.gov*.

FOR FURTHER INFORMATION CONTACT: Robert A. Monniere, Office of the Chief Counsel, Department of Transportation, Research and Innovative Technology Administration (RITA), Room 3105, 400 7th Street, SW., Washington DC, 20590, 202–366–5498 (voice), 202–366–3759 (fax), or *robert.monniere@dot.gov*.

SUPPLEMENTARY INFORMATION: The Department of Transportation system of records notice subject to the Privacy Act of 1974 (5 U.S.C. 552a), as amended, has been published in the **Federal Register** and is available from the above mentioned address.

SYSTEM NUMBER:

DOT/RITA 016.

SYSTEM NAME:

TSI's Online Catalog and Learning Management System.

SECURITY CLASSIFICATION:

Sensitive, unclassified.

SYSTEM LOCATION:

This system of record is in the Research and Innovative Technology Administration, Transportation Safety Institute, U.S. Department of Transportation, 6500 South MacArthur Boulevard, Oklahoma City, OK 73169.

CATEGORIES OF INDIVIDUALS COVERED BY THE SYSTEM:

The system consists of information on individuals who have enrolled in one or more TSI courses.

CATEGORIES OF RECORDS IN THE SYSTEM:

The information in the system consists of personally identifiable information on each student such as full name, home and work address, all phone numbers, e-mail address, employer, and job title.

AUTHORITY FOR MAINTENANCE OF THE SYSTEM:

49 U.S.C. 112(d)(1).

PURPOSE(S):

To monitor training programs provided by TSI for all DOT modes and industry.

ROUTINE USES OF RECORDS MAINTAINED IN THE SYSTEM, INCLUDING CATEGORIES OF USERS AND THE PURPOSE OF SUCH AS:

(1) TSI may disclose information from this system of records to:

a. Authorized representatives of the United States Government for the purposes of building class schedules, statistical information, and determining qualifications

b. Student supervisors for purposes of building class schedules and transcripts

c. Contacting universities for the purpose of continuing education credits

(2) TSI may use information from this system of records to determine:

Type of payment for classes

a. Category of student

b. If student has completed prerequisites or class eligibility

c. If student has completed necessary classes for available certifications

d. Potential contacts for instructors

e. Students that have taken a specific course or class

f. Successful class completion

g. The employer of a student and the region the student resides

h. Student enrollment priority level

i. Qualification expiration date

j. Continuing education units awarded to students

k. Statistical information

(3) See Prefatory Statement of General Routine Uses, 65 FR 19477 (April 11, 2000).

DISCLOSURE TO CONSUMER REPORTING AGENCIES:

None.

POLICIES AND PRACTICES FOR STORING, RETRIEVING, ACCESSING, RETAINING, AND DISPOSING OF RECORDS IN THE SYSTEM:

STORAGE:

Documents are stored in electronic form and as paper records.

RETRIEVABILITY:

Electronic records are retrievable by student's name, personal identifier, class, course, division student registered with, category of student, employer, location, job, e-mail address, student's supervisor, student's city, state, or zip. Paper records are retrievable by class, course, or student name.

SAFEGUARDS:

Access to records is limited to those who process the records for the specific routine uses stated above (*e.g.*, personnel in TSI and various federal agencies that have a specific need for the information). Various methods of computer security limit access to records in the automated database. Recent paper records are stored in file cabinets in their respective division. Archived paper records are stored in a TSI long term storage facility. Access to this facility is limited to TSI's Operations Support Division.

RETENTION AND DISPOSAL:

Most paper records are destroyed after 10 years. Electronic records are stored for an indefinite period of time.

SYSTEM MANAGER(S) AND ADDRESS:

Operations Support Division, Transportation Safety Institute, U.S. Department of Transportation, 6500 South MacArthur Boulevard, Oklahoma City, OK 73169. E-mail *tsitechsupport@tsi.jccbi.gov*.

NOTIFICATION PROCEDURE:

Same as ''System Manager''.

RECORD ACCESS PROCEDURES:

Same as ''System Manager''.

CONTESTING RECORDS PROCEDURES:

Same as ''System Manager''.

RECORD SOURCE CATEGORIES:

Information contained in this system is provided by individuals or on behalf of individuals, through electronic submission, telephone, fax or mail form, rosters provided by other federal or state agencies, and rosters provided by foreign entities received by TSI.

EXEMPTION CLAIMED FOR THE SYSTEM:

None.

OMB CONTROL NUMBER:

None.

Dated: October 6, 2005.

Steven Lott,

Departmental Privacy Officer.

[FR Doc. 05–20693 Filed 10–14–05; 8:45 am]

BILLING CODE 4910–62–P

DEPARTMENT OF THE TREASURY

Public Meeting of the President's Advisory Panel on Federal Tax Reform

AGENCY: Department of the Treasury.

ACTION: Notice of meeting.

SUMMARY: This notice advises all interested persons of a public meeting of the President's Advisory Panel on Federal Tax Reform.

DATES: This meeting will be held on Tuesday, November 1, 2005. The meeting will be held via teleconference and will begin at 9 a.m. Eastern Standard Time. Interested parties will be able to listen to the meeting. Call-in information will be posted on the Panel's Web site, *http://www.taxreformpanel.gov*, at a later date.

FOR FURTHER INFORMATION CONTACT: The Panel staff at (202) 927–2TAX (927–2829) (not a toll-free call) or e-mail *info@taxreformpanel.gov* (please do not send comments to this box). Additional information is available at *http://www.taxreformpanel.gov*.

SUPPLEMENTARY INFORMATION: *Purpose:* The November 1 meeting is the fourteenth meeting of the Advisory Panel. At this meeting, the Panel will finalize any remaining matters that may be pending before the Panel. There is a possibility that this meeting will not take place as scheduled. Please check the Panel's web site for updated information.

Comments: Interested parties are invited to call into the teleconference to listen to the meeting; however, no public comments will be heard at the meeting. Any written comments with respect to this meeting may be mailed to The President's Advisory Panel on Federal Tax Reform, 1440 New York Avenue NW., Suite 2100, Washington, DC 20220. All written comments will be made available to the public.

Records: Records are being kept of Advisory Panel proceedings and will be available at the Internal Revenue Service's FOIA Reading Room at 1111 Constitution Avenue, NW., Room 1621, Washington, DC 20024. The Reading Room is open to the public from 9 a.m. to 4 p.m., Monday through Friday except holidays. The public entrance to the reading room is on Pennsylvania Avenue between 10th and 12th streets. The phone number is (202) 622–5164 (not a toll-free number). Advisory Panel documents, including meeting announcements, agendas, and minutes, will also be available on *http://www.taxreformpanel.gov*.

Dated: October 13, 2005.

Mark S. Kaizen,

Designated Federal Officer.

[FR Doc. 05–20802 Filed 10–14–05; 8:45 am]

BILLING CODE 4811–37–P

DEPARTMENT OF THE TREASURY

Senior Executive Service; Departmental Performance Review Board

AGENCY: Treasury Department.

ACTION: Notice of members of the Departmental Performance Review Board (PRB).

SUMMARY: Pursuant to 5 U.S.C. 4314(c)(4), this notice announces the appointment of members of the Departmental PRB. The purpose of this PRB is to review and make recommendations concerning proposed performance appraisals, ratings, bonuses and other appropriate personnel actions for incumbents of SES positions for which the Secretary or Deputy Secretary is the appointing authority. These positions include SES bureau heads, deputy bureau heads and certain other positions. The Board will perform PRB functions for other key bureau positions if requested.

Composition of Departmental PRB: The Board shall consist of at least three members. In the case of an appraisal of a career appointee, more than half the members shall consist of career appointees. The names and titles of the PRB members are as follows:

Sandra L. Pack, Assistant Secretary for Management and Chief Financial Officer.

Donald V. Hammond, Fiscal Assistant Secretary.

Kim E. Nickles, White House Liaison.

James W. Carroll, Deputy General Counsel.

Kenneth R. Schmalzbach, Assistant General Counsel (General Law and Ethics).

Wesley T. Foster, Deputy Assistant Secretary for Management and Budget.

Mary Beth Shaw, Executive for D.C. Pensions Policy and Oversight.

Ira L. Hobbs, Deputy Assistant Secretary and Chief Information Officer.

Patricia J. Pointer, Deputy for Human Resources.

John M. Dalrymple, Deputy Commissioner, Operations Support, Internal Revenue Service.

John J. Manfreda, Administrator, Alcohol and Tobacco Tax and Trade Bureau.

Vicky I. McDowell, Deputy Administrator, Alcohol and Tobacco Tax and Trade Bureau.

William J. Fox, Director, Financial Crimes Enforcement Network.

William F. Baity, Deputy Director, Financial Crimes Enforcement Network.

Richard L. Gregg, Commissioner, Financial Management Service.

Kenneth R. Papaj, Deputy Commissioner, Financial Management Service.

Frederick Van Zeck, Commissioner, Bureau of the Public Debt.

Nancy C. Fleetwood, Deputy Commissioner, Bureau of the Public Debt.

Thomas A. Ferguson, Director, Bureau of Engraving and Printing.

Larry R. Felix, Deputy Director, Bureau of Engraving and Printing.

Pamela J. Gardiner, Associate Director for Management, Bureau of Engraving and Printing.

David A. Lebryk, Deputy Director, United States Mint.

DATES: Membership is effective on the date of this notice.

FOR FURTHER INFORMATION CONTACT: Dennis Cannon, Director, Office of Human Resources Strategy and Solutions, 1500 Pennsylvania Avenue, NW, ATTN: 1750 Pennsylvania Avenue, NW—Suite 8100, Washington, DC 20220, Telephone: (202) 622–1109.

This notice does not meet the Department's criteria for significant regulations.

Dated: October 7, 2005.

Dennis Cannon,

Director, Office of Human Resources Strategy and Solutions.

[FR Doc. 05–20654 Filed 10–14–05; 8:45 am]

BILLING CODE 4811–16–P

DEPARTMENT OF THE TREASURY

Office of the Comptroller of the Currency

FEDERAL RESERVE SYSTEM

FEDERAL DEPOSIT INSURANCE CORPORATION

Agency Information Collection Activities: Submission for OMB Review; Joint Comment Request

AGENCIES: Office of the Comptroller of the Currency (OCC), Treasury; Board of Governors of the Federal Reserve System (Board); and Federal Deposit Insurance Corporation (FDIC).

ACTION: Notice of information collection to be submitted to OMB for review and approval under the Paperwork Reduction Act of 1995.

SUMMARY: In accordance with the requirements of the Paperwork Reduction Act of 1995 (44 U.S.C. chapter 35), the OCC, the Board, and the FDIC (the ''agencies'') may not conduct or sponsor, and the respondent is not required to respond to, an information collection unless it displays a currently valid Office of Management and Budget (OMB) control number. On August 17, 2004, the agencies, under the auspices of the Federal Financial Institutions Examination Council (FFIEC), published a notice in the **Federal Register** (69 FR 51145) (August proposal) requesting public comment on proposed revisions to the Country Exposure Report (FFIEC 009) and the Country Exposure Information Report (FFIEC 009a), which are currently approved information collections. After considering the two comments received, the FFIEC and the agencies modified the August 2004 proposal. On April 19, 2005, the agencies published a notice in the **Federal Register** (April proposal) requesting public comment on the modified August 2004 proposal. The FFIEC and the agencies have considered the three comments received and have made further modifications to the April proposal. The agencies are now submitting requests to OMB for approval of the revisions to the FFIEC 009 and FFIEC 009a reports that have been adopted by the FFIEC.

DATES: Comments must be submitted on or before November 16, 2005.

ADDRESSES: Interested parties are invited to submit written comments to any or all of the agencies. All comments, which should refer to the OMB control number, will be shared among the agencies.

OCC: You should direct your comments to: Communications Division, Office of the Comptroller of the Currency, Public Information Room, Mailstop 1–5, Attention: 1557–0100, 250 E Street SW., Washington, DC 20219. In addition, comments may be sent by fax to 202–874–4448, or by electronic mail to *regs.comments@occ.treas.gov.* You can inspect and photocopy the comments at the OCC's Public Information Room, 250 E Street SW., Washington, DC 20219. You can make an appointment to inspect the comments by calling 202–874–5043.

Board: You may submit comments, identified by FFIEC 009, by any of the following methods:

- Agency Web Site: *http://www.federalreserve.gov.* Follow the instructions for submitting comments on *http://www.federalreserve.gov/generalinfo/foia/ProposedRegs.cfm.*
- Federal eRulemaking Portal: *http://www.regulations.gov.* Follow the instructions for submitting comments.
- E-mail: *regs.comments@federalreserve.gov.* Include docket number in the subject line of the message.
- FAX: 202–452–3819 or 202–452–3102.
- Mail: Jennifer J. Johnson, Secretary, Board of Governors of the Federal Reserve System, 20th Street and Constitution Avenue NW., Washington, DC 20551.

All public comments are available from the Board's Web site at *http://www.federalreserve.gov/generalinfo/foia/ProposedRegs.cfm* as submitted, unless modified for technical reasons. Accordingly, your comments will not be edited to remove any identifying or contact information. Public comments may also be viewed electronically or in paper in Room MP–500 of the Board's Martin Building (20th and C Streets NW.) between 9 a.m. and 5 p.m. on weekdays.

FDIC: You may submit written comments, which should refer to ''Country Exposure Reports, 3064–0017,'' by any of the following methods:

- Agency Web Site: *http://www.fdic.gov/regulations/laws/federal/propose.html.* Follow the instructions for submitting comments on the FDIC Web site.
- Federal eRulemaking Portal: *http://www.regulations.gov.* Follow the instructions for submitting comments.
- E-mail: *Comments@FDIC.gov.*
- Mail: Robert E. Feldman, Executive Secretary, Attention: Comments, FDIC, 550 17th Street NW., Washington, DC 20429.
- Hand Delivery/Courier: Guard station at the rear of the 550 17th Street Building (located on F Street) on business days between 7 a.m. and 5 p.m.

Public Inspection: All comments received will be posted without change to *http://www.fdic.gov/regulations/laws/federal/propose/html* including any personal information provided. Comments may be inspected at the FDIC Public Information Center, Room 100, 801 17th Street NW., Washington, DC, between 9 a.m. and 4:30 p.m. on business days.

A copy of the comments may also be submitted to the OMB desk officer for the agencies: By mail to U.S. Office of Management and Budget, 725, 17th Street, NW., #10235, Washington, DC 20503 or by facsimile to (202) 395–6974,

Attention: Federal Banking Agency Desk Officer.

FOR FURTHER INFORMATION CONTACT: Additional information or a copy of the collections may be requested from:

OCC: Mary Gottlieb, OCC Clearance Officer, or Camille Dixon, 202–874–5090, Legislative and Regulatory Activities Division, Office of the Comptroller of the Currency, 250 E Street SW., Washington, DC 20219.

Board: Michelle Long, Federal Reserve Board Clearance Officer, 202–452–3829, Division of Research and Statistics, Board of Governors of the Federal Reserve System, 20th and C Streets NW., Washington, DC 20551. Telecommunications Device for the Deaf (TDD) users may call 202–263–4869, Board of Governors of the Federal Reserve System, 20th and C Streets NW., Washington, DC 20551.

FDIC: Leneta G. Gregorie, Counsel, 202–898–3719, Legal Division, Federal Deposit Insurance Corporation, 550 17th Street NW., Washington, DC 20429.

SUPPLEMENTARY INFORMATION:

Proposal To Request Approval From OMB To Revise the Following Reports

Report Titles: Country Exposure Report and Country Exposure Information Report.

Form Numbers: FFIEC 009 and FFIEC 009a.

Frequency of Response: Quarterly.

Affected Public: Business or other for profit.

OCC

OMB Number: 1557–0100.

Estimated Number of Respondents: 21 (FFIEC 009); 21 (FFIEC 009a).

Estimated Average Time per Response: 70 burden hours (FFIEC 009); 5.25 burden hours (FFIEC 009a).

Estimated Total Annual Burden: 5,880 burden hours (FFIEC 009); 441 burden hours (FFIEC 009a).

Board

OMB Number: 7100–0035.

Estimated Number of Respondents: 29 (FFIEC 009); 16 (FFIEC 009a).

Estimated Average Time per Response: 70 burden hours (FFIEC 009); 5.25 burden hours (FFIEC 009a).

Estimated Total Annual Burden: 8,120 burden hours (FFIEC 009); 336 burden hours (FFIEC 009a).

FDIC

OMB Number: 3064–0017.

Estimated Number of Respondents: 21 (FFIEC 009); 21 (FFIEC 009a).

Estimated Average Time per Response: 70 burden hours (FFIEC 009); 5.25 burden hours (FFIEC 009a).

Estimated Total Annual Burden: 5,880 burden hours (FFIEC 009); 441 burden hours (FFIEC 009a).

General Description of Report

These information collections are mandatory: 12 U.S.C. 161 and 1817 (national banks), 12 U.S.C. 248(a), 1844(c), and 3906 (state member banks and bank holding companies), and 12 U.S.C. 1817 and 1820 (insured state nonmember banks). The FFIEC 009 data are given confidential treatment (5 U.S.C. 552(b)(4) and (b)(8)). The FFIEC 009a data are not given confidential treatment.

Abstract

The Country Exposure Report (FFIEC 009) is filed quarterly with the agencies and provides information on international claims of U.S. banks and bank holding companies that is used for supervisory and analytical purposes. The information is used to monitor country exposure of banks to determine the degree of risk in their portfolios and the possible impact on U.S. banks of adverse developments in particular countries. The Country Exposure Information Report (FFIEC 009a) is a supplement to the FFIEC 009 and provides publicly available information on material foreign country exposures (all exposures to a country in excess of 1 percent of total assets or 20 percent of capital, whichever is less) of U.S. banks and bank holding companies that file the FFIEC 009 report. As part of the Country Exposure Information Report, reporting institutions must also furnish a list of countries in which they have lending exposures above 0.75 percent of total assets or 15 percent of total capital, whichever is less.

Current Actions

On April 19, 2005, the OCC, the Board, and the FDIC jointly published a notice soliciting comments for 60 days on a modified set of proposed revisions to the FFIEC 009 and FFIEC 009a reports (70 FR 20414). The FFIEC and the agencies made these modifications after considering the two comments received on proposed revisions to these reports that had been published for comment on August 17, 2004 (69 FR 51145). The agencies proposed in August 2004 to revise the FFIEC 009 to harmonize U.S. data with data on cross-border exposures collected by other countries and disseminated by the Bank for International Settlements (BIS) as their ''consolidated banking statistics.'' The proposed revisions included collecting additional detail on foreign-office claims of U.S. banks on local residents, including sector breakdowns and a currency split; adding a split between commitments and guarantees plus credit derivatives; redefining trade finance to be after adjustments for collateral and guarantees; and conforming the definition of public (i.e., government) sector with the definition used in the commercial bank Consolidated Reports of Condition and Income (Call Report) (FFIEC 031 and 041). No changes to the FFIEC 009a were proposed although the change in the definition of public sector in the FFIEC 009 results in a change in the amounts reported in columns 6 and 7 of the FFIEC 009a by corresponding amounts. In addition, the FFIEC 009a instructions were to be changed to reflect column changes on the FFIEC 009.

Under the April proposal, other proposed revisions included adding three columns to collect total foreign-office claims on local residents in a non-local currency, collecting three sector breaks for inward and outward risk transfers, changing the instructions regarding risk distributions for resale agreements and repayment structures, adding a column to collect foreign-office liabilities by country of residence of the creditor, adding a column to collect the total credit equivalent amount for all foreign exchange and derivative contracts by country of ultimate counterparty, and increasing the estimated response time to 70 hours. The agencies also proposed that all of the revisions to the FFIEC 009 would take effect as of the September 30, 2005, report date.

In response to the April 19, 2005, notice, the agencies received three comment letters from a banking trade association, a holding company, and one other party. After considering these comments and modifying the April proposal, the FFIEC and the agencies propose to implement changes to the FFIEC 009 effective with the March 31, 2006, report date, as discussed below.

Detailed Discussion of the Comments

Delay Implementation

Two commenters suggested delaying the implementation of the FFIEC 009 revisions until March 2006 or later because the proposed changes, if finalized, will require significant system changes and testing. The agencies agreed to delay the implementation of the revisions until March 2006.

Regular Filing Period

In the April proposal, the agencies stated that they would extend the filing period from 45 to 60 days for the initial revised report in September 2005. Since

FFIEC 009 reporters will now have additional time to implement the proposed changes, the agencies have agreed that the filing period for the March 2006 report should be the regular 45-day filing period.

Delete Credit Equivalent Amount from Schedule 2

One commenter suggested that the proposed ''Credit equivalent amount of foreign exchange and derivative products'' column not be added to the reporting form for several reasons. First, the credit equivalent amount is not widely used by banks in their internal risk management systems; therefore, it would be burdensome to implement. Second, the Basel Committee on Banking Supervision recommends using expected positive exposure, rather than the potential future exposure, to create the ''add on'' to the current credit exposure when calculating the credit equivalent amount of derivatives for risk-based capital purposes because the potential future exposure is not sufficiently risk-sensitive (although it is consistent across banks). The agencies agreed to delete this proposed column from the reporting form; however, the agencies may propose reporting changes related to the expected positive exposure of foreign exchange and derivative products once the Basel II risk-based capital framework has been implemented.

Collection of Data on Foreign-office Liabilities by Country of Creditor's Residence

In the April proposal, the agencies agreed to add a column to the FFIEC 009 to collect foreign-office liabilities by country of residence of the creditor once the reduction in reporting on the Quarterly Report of Assets and Liabilities of Large Foreign Offices of U.S. Banks (FR 2502q) to the Federal Reserve was implemented. The agencies agreed that since the reporting for the FR 2502q would be scaled back by March 2006, the proposed column on the FFIEC 009 could be implemented as of March 2006. The data in this new column would be required only from institutions that otherwise would have had to file the FR 2502q.

Clarify Instructions

One commenter suggested clarifying the instructions on whether the commitment columns in the FFIEC 009 refer to total commitments (which would include outstanding loans already included in columns 1–3) or unused commitments, similar to the Call Report and Consolidated Financial Statements for Bank Holding Companies (FR Y–9C) instructions. The commenter also suggested clarifying how to determine a foreign obligor's country of residence in the instructions. The agencies agreed to clarify the instructions for both of these issues. The commitment columns would cover only unused commitments. The country of residence is defined as the country of incorporation or, for branches, of charter.

Request for Comment

Comments are invited on:

a. Whether the information collections are necessary for the proper performance of the agencies' functions, including whether the information has practical utility;

b. The accuracy of the agencies' estimates of the burden of the information collections, including the validity of the methodology and assumptions used;

c. Ways to enhance the quality, utility, and clarity of the information to be collected;

d. Ways to minimize the burden of information collections on respondents, including through the use of automated collection techniques or other forms of information technology; and

e. Estimates of capital or start up costs and costs of operation, maintenance, and purchase of services to provide information.

Comments submitted in response to this notice will be shared among the agencies. All comments will become a matter of public record. Written comments should address the accuracy of the burden estimates and ways to minimize burden including the use of automated collection techniques or the use of other forms of information technology as well as other relevant aspects of the information collection request.

Dated: October 7, 2005.

Stuart Feldstein,

Assistant Director, Legislative and Regulatory Activities Division, Office of the Comptroller of the Currency.

Board of Governors of the Federal Reserve System, October 11, 2005.

Jennifer J. Johnson,

Secretary of the Board.

Dated at Washington, DC this 5th day of October, 2005.

Federal Deposit Insurance Corporation.

Robert E. Feldman,

Executive Secretary.

[FR Doc. 05–20662 Filed 10–14–05; 8:45 am]

BILLING CODE 4810–33–P; 6210–01–P; 6714–01–P

Federal Register

Monday,
October 17, 2005

Part II

The President

Presidential Determination No. 2005–38 of September 26, 2005—Presidential Determination Relating to Assistance for Saudi Arabia

Presidential Determination No. 2005–39 of September 28, 2005—Transfers of Defense Articles or Services for Libya for Chemical Weapons Destruction

Presidential Determination No. 2005–40 of September 28, 2005—Transfers of Defense Articles or Services and Brokering Activities for Libya Relating to Disposition of Libyan-Owned C–130H Aircraft

Presidential Determination No. 2005–41 of September 29, 2005—Transfer of Funds from FY 2004 and 2005 Foreign Assistance Act and Arms Export Control Act Accounts to the International Narcotics Control and Law Enforcement Account to Support the G–8 Women's Justice and Empowerment Initiative

Federal Register
Vol. 70, No. 199
Monday, October 17, 2005

Presidential Documents

Title 3—

The President

Presidential Determination No. 2005–38 of September 26, 2005

Presidential Determination Relating to Assistance for Saudi Arabia

Memorandum for the Secretary of State

Pursuant to the authority vested in me by the Constitution and the laws of the United States, including section 575 of the Foreign Operations, Export Financing, and Related Programs Appropriations Act, 2005 (FY 2005 FOAA) (Div. D, Public Law 108–447), I hereby certify that Saudi Arabia is cooperating with efforts to combat international terrorism and that the proposed assistance will help facilitate that effort, and hereby waive the application of section 575 of the FY 2005 FOAA, as well as any provision of law that is the same or substantially the same as such provision, including subsequently enacted provisions.

You are directed to report this certification to the Congress and publish it in the **Federal Register**.

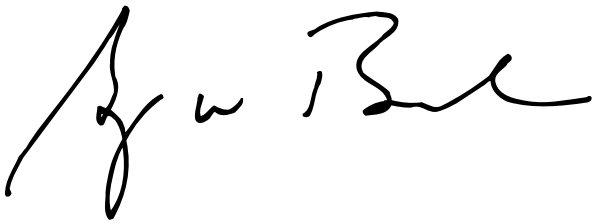

THE WHITE HOUSE,
Washington, September 26, 2005.

[FR Doc. 05–20853
Filed 10–14–05; 8:45 am]
Billing code 4710–10–P

Presidential Documents

Presidential Determination No. 2005–39 of September 28, 2005

Transfers of Defense Articles or Services for Libya for Chemical Weapons Destruction

Memorandum for the Secretary of State

Pursuant to the authority vested in me by the Constitution and laws of the United States, including sections 40(g) and 40A of the Arms Export Control Act (AECA), I hereby:

- determine that the transaction, encompassing sales or licensing for export of defense articles or defense services necessary to assist in chemical weapon (CW) destruction in Libya, is essential to the national security interests of the United States and important to the national interests of the United States;
- waive the prohibitions in sections 40 and 40A of the AECA related to such transaction; and
- assign to you the functions under AECA section 40(g)(2) to consult with and submit reports to the Congress for proposed specific exports or transfers, 15 days prior to permitting them to proceed, that are necessary for and within the scope of this waiver determination and the transaction referred to herein.

You are authorized and directed to report this certification to the Congress and to arrange for its publication in the **Federal Register**.

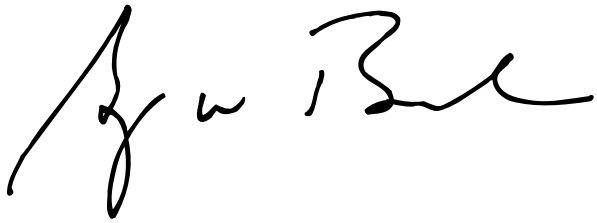

THE WHITE HOUSE,
Washington, September 28, 2005.

[FR Doc. 05–20854
Filed 10–14–05; 8:45 am]
Billing code 4710–10–P

Presidential Documents

Presidential Determination No. 2005–40 of September 28, 2005

Transfers of Defense Articles or Services and Brokering Activities for Libya Relating to Disposition of Libyan-owned C–130H Aircraft

Memorandum for the Secretary of State

Pursuant to the authority vested in me by the Constitution and laws of the United States, including sections 40(g) and 40A of the Arms Export Control Act (AECA), I hereby:

- determine that the transaction, encompassing sales or licensing for export of defense articles or defense services and brokering activities necessary to assist in the disposition, including any required refurbishment, of Libyan-owned C–130H aircraft, is essential to the national security interests of the United States and important to the national interests of the United States;
- waive the prohibitions in sections 40 and 40A of the AECA related to such transaction; and
- assign to you the functions under AECA section 40(g)(2) to consult with and submit reports to the Congress for proposed specific exports or transfers, 15 days prior to permitting them to proceed, that are necessary for and within the scope of this waiver determination and the transaction referred to herein.

You are authorized and directed to report this certification to the Congress and to arrange for its publication in the **Federal Register**.

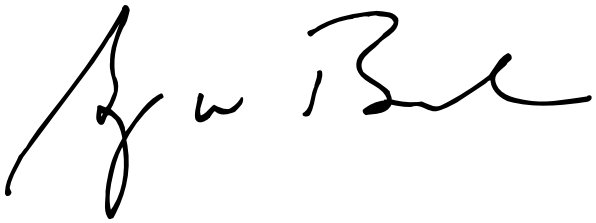

THE WHITE HOUSE,
Washington, September 28, 2005.

[FR Doc. 05–20855
Filed 10–14–05; 8:45 am]
Billing code 4710–10–P

Presidential Documents

Presidential Determination No. 2005–41 of September 29, 2005

Transfer of Funds from FY 2004 and 2005 Foreign Assistance Act and Arms Export Control Act Accounts to the International Narcotics Control and Law Enforcement Account to Support the G–8 Women's Justice and Empowerment Initiative

Memorandum for the Secretary of State

Pursuant to the authority vested in me by the Constitution and laws of the United States, including section 610 of the Foreign Assistance Act of 1961, as amended (the ''Act''), I hereby determine it necessary for the purposes of that Act that $5 million in FY 2004 funds made available under the Support for East European Democracy Act ($1 million) and FY 2005 funds made available under chapter 9 of part II of the Act ($1.2 million) and under section 23 of the Arms Export Control Act ($2.8 million) be transferred to, and consolidated with, funds made available under chapter 8 of part I of the Act, and such funds are hereby so transferred and consolidated.

You are hereby authorized and directed to report this determination to the Congress and to publish it in the **Federal Register**.

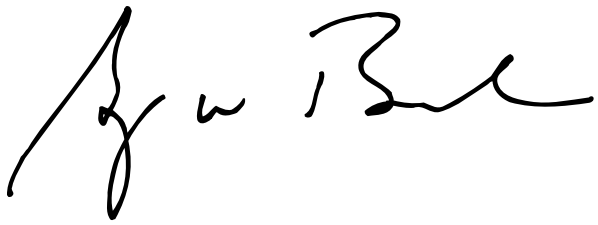

THE WHITE HOUSE,
Washington, September 29, 2005.

[FR Doc. 05–20856
Filed 10–14–05; 8:45 am]
Billing code 4710–10–P

Reader Aids

Federal Register

Vol. 70, No. 199

Monmday, October 17, 2005

CUSTOMER SERVICE AND INFORMATION

Federal Register/Code of Federal Regulations	
General Information, indexes and other finding aids	**202–741–6000**
Laws	**741–6000**
Presidential Documents	
Executive orders and proclamations	**741–6000**
The United States Government Manual	**741–6000**
Other Services	
Electronic and on-line services (voice)	**741–6020**
Privacy Act Compilation	**741–6064**
Public Laws Update Service (numbers, dates, etc.)	**741–6043**
TTY for the deaf-and-hard-of-hearing	**741–6086**

ELECTRONIC RESEARCH

World Wide Web

Full text of the daily Federal Register, CFR and other publications is located at: **http://www.gpoaccess.gov/nara/index.html**

Federal Register information and research tools, including Public Inspection List, indexes, and links to GPO Access are located at: **http://www.archives.gov/federal__register/**

E-mail

FEDREGTOC-L (Federal Register Table of Contents LISTSERV) is an open e-mail service that provides subscribers with a digital form of the Federal Register Table of Contents. The digital form of the Federal Register Table of Contents includes HTML and PDF links to the full text of each document.

To join or leave, go to **http://listserv.access.gpo.gov** and select *Online mailing list archives, FEDREGTOC-L, Join or leave the list (or change settings);* then follow the instructions.

PENS (Public Law Electronic Notification Service) is an e-mail service that notifies subscribers of recently enacted laws.

To subscribe, go to **http://listserv.gsa.gov/archives/publaws-l.html** and select *Join or leave the list (or change settings);* then follow the instructions.

FEDREGTOC-L and **PENS** are mailing lists only. We cannot respond to specific inquiries.

Reference questions. Send questions and comments about the Federal Register system to: **fedreg.info@nara.gov**

The Federal Register staff cannot interpret specific documents or regulations.

FEDERAL REGISTER PAGES AND DATE, OCTOBER

57483–57724 3
57725–57992 4
57993–58290 5
58291–58602 6
58603–58968 7
58969–59208 11
59209–59620 12
59621–59986 13
59987–60202 14
60203–60404 17

CFR PARTS AFFECTED DURING OCTOBER

At the end of each month, the Office of the Federal Register publishes separately a List of CFR Sections Affected (LSA), which lists parts and sections affected by documents published since the revision date of each title.

3 CFR

Proclamations:
7936 58281
7937 58283
7938 58285
7939 58287
7940 59209
7941 59977
7942 59979
7943 59981
7944 59983
7945 59985

Executive Orders:
11145 (Continued by 13385) 57989
11183 (Continued by 13385) 57989
11287 (Continued by 13385) 57989
12131 (Continued by 13385) 57989
12196 (Continued by 13385) 57989
12216 (Amended by 13385) 57989
12367 (Continued by 13385) 57989
12382 (Continued by 13385) 57989
12905 (Continued by 13385) 57989
12994 (Continued by 13385) 57989
13226 (Amended by 13385) 57989
13231 (Continued by 13385) 57989
13237 (Continued by 13385) 57989
13256 (Continued by 13385) 57989
13265 (Continued by 13385) 57989
13270 (Continued by 13385) 57989
13316 (Superseded in part by 13385).....57989
13231 (Amended by 13385) 57989
13283 (Revoked by 13385) 57989
13326 (Revoked by 13385) 57989
13328 (Revoked by 13385) 57989
13369 (Amended by 13386) 58289
13385 57989
13386 58289

Administrative Orders:
Presidential Determinations:
No. 2005–38 of September 26, 2005 60397
No. 2005–39 of September 28, 2005 60399
No. 2005–40 of September 28, 2005 60401
No. 2005–41 of September 29, 2005 60403

5 CFR
1650 59621

6 CFR
13 59209

7 CFR
54 58969
62 58969
300 57993
301 57993
302 57993
305 57993
318 57993
319 57993
322 57993
330 57993
340 57993
351 57993
352 57993
353 57993
354 57993
355 57994
360 57993
371 57993
380 57993
915 59622
927 59625
979 57995
1005 59221
1007 59221
1902 59224
4279 57483
4287 57483

Proposed Rules:
301 .....58084, 59280
319 59283
1030 58086
1219 59678
1260 58095
1437 57520

9 CFR
77 58291
93 57486
327 57725

10 CFR

430 59122

12 CFR

34 59987
204 58603
225 59987
323 59987
564 59987
620 58293
621 58293
650 58293
651 58293
652 58293
653 58293
654 58293
655 58293
722 59987
1700 59628
Proposed Rules:
226 60235
307 60015
331 60019
362 60019

13 CFR

126 58974

14 CFR

21 59932
25 ....57726, 57728, 57730, 58605, 59630, 59632, 59635, 59988
39 ....57487, 57491, 57493, 57732, 57734, 57736, 57739, 57740, 57998, 58000, 58002, 58005, 58007, 58257, 58293, 58295, 58298, 58300, 58303, 58305, 59229, 59231, 59233, 59236, 59237, 59240, 59243, 59244, 59246, 59252, 59256, 59258, 59263, 59266, 59636, 59638, 59640, 59644, 59647, 60203, 60205, 60206, 60211
71 ....57497, 57498, 57746, 58307, 58308, 58607, 59651, 59652, 59653, 59990, 59992, 60132
73 58607
95 57499
97 ....57504, 57746
119 58796
121 ....58796, 59932
135 ....58796, 59932
145 ....58796, 59932
183 59932
Proposed Rules:
1 58308
25 58308
39 ....57804, 58100, 58103, 58107, 58110, 58352, 58355, 58357, 58358, 58620, 58623, 58626, 58628, 58631, 58634, 60244, 60246
71 57805
91 58508
121 ....58508, 58966, 58967
125 58508
129 58508
135 ....58966, 58967

15 CFR

Proposed Rules:
7 59678

16 CFR

Proposed Rules:
Ch. II 60031
23 57807

17 CFR

Proposed Rules:
1 58985
145 58985
147 58985

18 CFR

Proposed Rules:
2 58636
33 58636

19 CFR

12 58009
102 58009
141 58009
144 58009
146 58009
163 58009

20 CFR

Proposed Rules:
404 ....58999, 60251
408 60251
416 ....58999, 60251

21 CFR

1 57505
20 57505
310 58974
341 58974
510 57927
866 57748
Proposed Rules:
589 58570

22 CFR

96 59654

24 CFR

983 59892

25 CFR

161 58882

26 CFR

1 ....57509, 57750, 60132
54 59620
801 60214
Proposed Rules:
1 ....57523, 57807, 57930
301 57523
801 60256

27 CFR

9 ....59993, 59996

29 CFR

697 57722
1610 57510
2560 59620
2590 59620
4022 60002
4044 60002
Proposed Rules:
1910 59290
1926 59290

30 CFR

Proposed Rules:
46 57808
48 57808
50 57808
56 57808
57 57808
75 57808
77 57808
117 57524

31 CFR

29 60003

32 CFR

179 58016

33 CFR

100 58055
117 ....58056, 58057, 58059, 58308, 59655
165 ....58608, 60004
Proposed Rules:
165 58646

36 CFR

1230 58978

37 CFR

201 58310
256 58310
Proposed Rules:
201 57526

39 CFR

Proposed Rules:
111 60036

40 CFR

3 59848
9 ....59402, 59848, 60134
51 ....59582, 59848
52 ....57511, 57750, 58311, 58313, 58321, 58325, 58978, 59657, 60008, 60010
60 59848
62 ....57762, 57764, 58328
63 ....57513, 59402, 59848
69 59848
70 59848
71 59848
80 58330
81 59657
122 60134
123 59848
142 59848
145 59848
162 59848
180 59268
233 59848
257 59848
258 59848
260 59402
261 ....57769, 60217
264 59402
265 59402
266 59402
270 59402
271 ....59402, 59848
281 59848
403 ....59848, 60134
501 59848
710 60217
745 59848
763 59848
Proposed Rules:
51 59680
52 ....57531, 58112, 58119, 58138, 58146, 58154, 58167, 59681, 59688, 59690, 60036, 60037
62 ....57531, 57811, 57812, 58361
63 57534
69 59690
81 59690
302 57813
355 57813
372 57822
403 60199

41 CFR

60–1 58946
301–11 60221
301–74 60221

42 CFR

405 57785
412 57785
413 57785
415 57785
419 57785
422 57785
431 58260
457 58260
483 58834
485 57785
Proposed Rules:
411 59182
421 58649
1001 59015

43 CFR

3000 58854
3100 58854
3110 58854
3120 58854
3130 58854
3140 58610
3200 58854
3470 58854
3500 58854
3600 58854
3800 58854
3830 58854
3833 58854
3835 58854
3836 58854
3860 58854
3870 58854
Proposed Rules:
4 58167
2560 58654

44 CFR

65 ....57786, 57788
67 57791
Proposed Rules:
67 ....57848, 57850

45 CFR

Proposed Rules:

302 60038
303 60038
307 60038
Ch. XXV 60257

46 CFR

296 59400

47 CFR

5 59276
25 59276

27 58061
51 60222
63 60222
64 ....59664, 60222
73 ....59277, 59279
97 59276
Proposed Rules:
63 60259
64 ....59704, 60259
73 ....59292, 59293, 59294, 59295

48 CFR
Ch. 2 58980
204 58980
215 58980
252 58980

49 CFR
172 59119
303 58616
387 58065
591 57793
592 57793
594 57793
Proposed Rules:
29 58175
192 57536
393 58657
571 57549

50 CFR
17 ....58335, 59808, 59952
222 60013
223 60013
622 57802
648 ....57517, 57802, 58351
660 ....58066, 59296
679 ....57518, 57803, 58983, 59675, 59676
Proposed Rules:
17 ....57851, 58361, 60051
21 ....59710, 60052
622 60058
635 ....58177, 58366

REMINDERS

The items in this list were editorially compiled as an aid to Federal Register users. Inclusion or exclusion from this list has no legal significance.

RULES GOING INTO EFFECT OCTOBER 17, 2005

AGRICULTURE DEPARTMENT

Agricultural Marketing Service

Commodity Laboratory Testing Programs:

Plant Variety and Protection Office; fee increase; published 9-16-05

COMMERCE DEPARTMENT

National Oceanic and Atmospheric Administration

Fishery conservation and management:

Magnuson-Stevens Act provisions—

Bering Sea and Aleutian Islands king and tanner crabs; fishing capacity reduction program; industry fee system; published 9-16-05

ENVIRONMENTAL PROTECTION AGENCY

Air quality implementation plans; approval and promulgation; various States:

Iowa; published 8-16-05

TRANSPORTATION DEPARTMENT

Federal Aviation Administration

Aircraft products, parts, appliances, and materials; false and misleading statements; published 9-16-05

Airworthiness directives:

Rolls-Royce plc; published 9-12-05

TREASURY DEPARTMENT

Internal Revenue Service

Procedure and administration:

Organizational and employee performance within the IRS; balanced measurement system; published 10-17-05

COMMENTS DUE NEXT WEEK

AGENCY FOR INTERNATIONAL DEVELOPMENT

Assistance awards to U.S. non-Governmental organizations; marking requirements; Open for comments until further notice; published 8-26-05 [FR 05-16698]

AGRICULTURE DEPARTMENT

Agricultural Marketing Service

Cotton classing, testing and standards:

Classification services to growers; 2004 user fees; Open for comments until further notice; published 5-28-04 [FR 04-12138]

Walnuts grown in—

California; Walnut Marketing Board, membership; comments due by 10-25-05; published 8-26-05 [FR 05-17055]

AGRICULTURE DEPARTMENT

Animal and Plant Health Inspection Service

Exportation and importation of animals and animal products:

Exotic Newcastle disease; disease status change—

Argentina; comments due by 10-24-05; published 8-23-05 [FR 05-16689]

AGRICULTURE DEPARTMENT

Forest Service

Oil and gas operations:

Onshore Federal and Indian oil and gas leases; approval of operations (Order No.1); comments due by 10-25-05; published 8-26-05 [FR 05-17051]

AGRICULTURE DEPARTMENT

Natural Resources Conservation Service

Reports and guidance documents; availability, etc.:

National Handbook of Conservation Practices; Open for comments until further notice; published 5-9-05 [FR 05-09150]

AGRICULTURE DEPARTMENT

Rural Housing Service

Program regulations:

Construction and repair; surety requirements; comments due by 10-25-05; published 8-26-05 [FR 05-17026]

CHEMICAL SAFETY AND HAZARD INVESTIGATION BOARD

Meetings; Sunshine Act; Open for comments until further notice; published 10-4-05 [FR 05-20022]

COMMERCE DEPARTMENT

National Oceanic and Atmospheric Administration

Marine mammals:

Commercial fishing operations; incidental taking—

Fisheries categorized according to frequency of incidental takes; 2005 list; comments due by 10-24-05; published 8-25-05 [FR 05-16939]

COURT SERVICES AND OFFENDER SUPERVISION AGENCY FOR THE DISTRICT OF COLUMBIA

Semi-annual agenda; Open for comments until further notice; published 12-22-03 [FR 03-25121]

DEFENSE DEPARTMENT

Acquisition regulations:

Pilot Mentor-Protege Program; Open for comments until further notice; published 12-15-04 [FR 04-27351]

EDUCATION DEPARTMENT

Grants and cooperative agreements; availability, etc.:

Vocational and adult education—

Smaller Learning Communities Program; Open for comments until further notice; published 2-25-05 [FR E5-00767]

ENERGY DEPARTMENT

Meetings:

Environmental Management Site-Specific Advisory Board—

Oak Ridge Reservation, TN; Open for comments until further notice; published 11-19-04 [FR 04-25693]

ENERGY DEPARTMENT

Energy Efficiency and Renewable Energy Office

Commercial and industrial equipment; energy efficiency program:

Test procedures and efficiency standards—

Commercial packaged boilers; Open for comments until further notice; published 10-21-04 [FR 04-17730]

ENVIRONMENTAL PROTECTION AGENCY

Air pollutants, hazardous; national emission standards:

Hydrochloric acid production; comments due by 10-24-05; published 8-24-05 [FR 05-16813]

Air pollution control:

Interstate transport of fine particulate matter and ozone reduction; response to Section 126 petitions; Acid Rain Program revisions; comments due by 10-24-05; published 8-24-05 [FR 05-15529]

Air quality implementation plans; Approval and promulgation; various States; air quality planning purposes; designation of areas:

Illinois; comments due by 10-24-05; published 9-22-05 [FR 05-18955]

Kentucky; comments due by 10-24-05; published 9-22-05 [FR 05-18959]

Tennessee; comments due by 10-24-05; published 9-22-05 [FR 05-18952]

Air quality implementation plans; approval and promulgation; various States:

Texas; comments due by 10-28-05; published 9-28-05 [FR 05-19357]

Environmental statements; availability, etc.:

Coastal nonpoint pollution control program—

Minnesota and Texas; Open for comments until further notice; published 10-16-03 [FR 03-26087]

Hazardous waste program authorizations:

North Dakota; comments due by 10-26-05; published 9-26-05 [FR 05-19136]

South Dakota; comments due by 10-27-05; published 9-27-05 [FR 05-19255]

Pesticides; tolerances in food, animal feeds, and raw agricultural commodities:

Myclobutanil; comments due by 10-24-05; published 8-24-05 [FR 05-16805]

Water pollution control:

National Pollutant Discharge Elimination System—

Concentrated animal feeding operations in New Mexico and Oklahoma; general permit for discharges; Open for comments until further notice; published 12-7-04 [FR 04-26817]

Texas; general permit for territorial seas; Open for

comments until further notice; published 9-6-05 [FR 05-17614]
Water pollution; effluent guidelines for point source categories:
Meat and poultry products processing facilities; Open for comments until further notice; published 9-8-04 [FR 04-12017]

FEDERAL COMMUNICATIONS COMMISSION
Committees; establishment, renewal, termination, etc.:
Technological Advisory Council; Open for comments until further notice; published 3-18-05 [FR 05-05403]
Common carrier services:
Interconnection—
Incumbent local exchange carriers unbounding obligations; local competition provisions; wireline services offering advanced telecommunications capability; Open for comments until further notice; published 12-29-04 [FR 04-28531]
International fixed public radiocommunication services—
Satellite network earth stations and space stations; spectrum usage; comments due by 10-28-05; published 9-28-05 [FR 05-19160]

FEDERAL ELECTION COMMISSION
Bipartisan Campaign Reform Act; implementation:
Non-Federal funds; to solicit and to direct definitions; comments due by 10-28-05; published 9-28-05 [FR 05-19330]

HEALTH AND HUMAN SERVICES DEPARTMENT
Centers for Medicare & Medicaid Services
Medicaid:
State allotments for payment of Medicare Part B premiums for qualifying individuals; comments due by 10-25-05; published 8-26-05 [FR 05-16973]
State disproportionate share hospital payments; comments due by 10-25-05; published 8-26-05 [FR 05-16974]

HEALTH AND HUMAN SERVICES DEPARTMENT
Food and Drug Administration
Reports and guidance documents; availability, etc.:
Evaluating safety of antimicrobial new animal drugs with regard to their microbiological effects on bacteria of human health concern; Open for comments until further notice; published 10-27-03 [FR 03-27113]
Medical devices—
Dental noble metal alloys and base metal alloys; Class II special controls; Open for comments until further notice; published 8-23-04 [FR 04-19179]

HOMELAND SECURITY DEPARTMENT
Coast Guard
Anchorage regulations:
Maryland; Open for comments until further notice; published 1-14-04 [FR 04-00749]

HOUSING AND URBAN DEVELOPMENT DEPARTMENT
Grants and cooperative agreements; availability, etc.:
Homeless assistance; excess and surplus Federal properties; Open for comments until further notice; published 8-5-05 [FR 05-15251]

INTERIOR DEPARTMENT
Indian Affairs Bureau
Indian tribes, acknowledgment of existence determinations, etc.:
Western Shoshone; comments due by 10-28-05; published 9-28-05 [FR 05-19322]

INTERIOR DEPARTMENT
Land Management Bureau
Oil and gas operations:
Onshore Federal and Indian oil and gas leases; approval of operations (Order No.1); comments due by 10-25-05; published 8-26-05 [FR 05-17051]

INTERIOR DEPARTMENT
Fish and Wildlife Service
Endangered and threatened species permit applications
Recovery plans—
Paiute cutthroat trout; Open for comments until further notice; published 9-10-04 [FR 04-20517]
Endangered and threatened species:
Critical habitat designations—
Coachella Valley milk-vetch; comments due by 10-27-05; published 9-27-05 [FR 05-19098]
Findings on petitions, etc.—
California spotted owl; comments due by 10-28-05; published 10-14-05 [FR 05-20646]

JUSTICE DEPARTMENT
Justice Programs Office
Crime victim services:
International Terrorism Victim Expense Reimbursement Program; comments due by 10-24-05; published 8-24-05 [FR 05-16495]

LABOR DEPARTMENT
Labor-Management Standards Office
Standards of conduct:
Labor organization officer and employee reports; comments due by 10-28-05; published 8-29-05 [FR 05-16907]

NUCLEAR REGULATORY COMMISSION
Environmental statements; availability, etc.:
Fort Wayne State Developmental Center; Open for comments until further notice; published 5-10-04 [FR 04-10516]
Rulemaking petitions:
Nevada; comments due by 10-26-05; published 8-12-05 [FR 05-15990]

PERSONNEL MANAGEMENT OFFICE
Retirement:
Federal Employees Retirement System (FERS)—
Retirement credit for certain Government service performed abroad; comments due by 10-28-05; published 8-29-05 [FR 05-17053]

SMALL BUSINESS ADMINISTRATION
Disaster loan areas:
Maine; Open for comments until further notice; published 2-17-04 [FR 04-03374]

SOCIAL SECURITY ADMINISTRATION
Social security benefits and supplemental security income:
Federal, old age, survivors, and disability insurance; and aged, blind, and disabled—
Initial disability claims adjudication; administrative review process; comments due by 10-25-05; published 7-27-05 [FR 05-14845]

OFFICE OF UNITED STATES TRADE REPRESENTATIVE
Trade Representative, Office of United States
Generalized System of Preferences:
2003 Annual Product Review, 2002 Annual Country Practices Review, and previously deferred product decisions; petitions disposition; Open for comments until further notice; published 7-6-04 [FR 04-15361]

TRANSPORTATION DEPARTMENT
Federal Aviation Administration
Airworthiness directives:
Airbus; comments due by 10-24-05; published 8-23-05 [FR 05-16457]
Boeing; comments due by 10-24-05; published 9-7-05 [FR 05-17670]
Bombardier; comments due by 10-24-05; published 8-23-05 [FR 05-16533]
Construcciones Aeronauticas, S.A.; comments due by 10-24-05; published 9-22-05 [FR 05-18906]
General Electric Co.; comments due by 10-24-05; published 8-23-05 [FR 05-16709]
Gulfstream; comments due by 10-26-05; published 9-26-05 [FR 05-19141]
Short Brothers; comments due by 10-25-05; published 8-26-05 [FR 05-16750]
Turbomeca S.A.; comments due by 10-25-05; published 8-26-05 [FR 05-16834]
Airworthiness standards:
Special conditions—
Premier Avionics Design Ltd.; Cessna 441 airplane; electronic flight instrumentation system installation; comments due by 10-28-05; published 9-28-05 [FR 05-19289]
Area navigation routes; comments due by 10-28-05; published 9-28-05 [FR 05-19290]
Class B airspace; comments due by 10-27-05; published 8-23-05 [FR 05-16743]
Class E airspace; comments due by 10-24-05; published 9-9-05 [FR 05-17836]

TRANSPORTATION DEPARTMENT
Federal Motor Carrier Safety Administration
Motor vehicle safety standards:
Commercial driver's license standards; school bus endorsement; comments due by 10-28-05; published 9-28-05 [FR 05-19292]

TRANSPORTATION DEPARTMENT
National Highway Traffic Safety Administration
Civil monetary penalties; inflation adjustment; comments due by 10-24-05; published 9-8-05 [FR 05-17747]
Motor vehicle safety standards:
Child restraint systems—
Recordkeeping requirements; comments due by 10-24-05; published 9-9-05 [FR 05-17844]

TREASURY DEPARTMENT

Internal Revenue Service

Income taxes:

Special rule regarding certain section 951 pro rata share allocations; comments due by 10-24-05; published 8-25-05 [FR 05-16610]

Subchapter T cooperatives; return requirements; comments due by 10-27-05; published 7-29-05 [FR 05-15060]

TREASURY DEPARTMENT

Alcohol and Tobacco Tax and Trade Bureau

Alcoholic beverages:

Imported natural wine; certification requirements; cross-reference; comments due by 10-24-05; published 8-24-05 [FR 05-16771]

LIST OF PUBLIC LAWS

This is a continuing list of public bills from the current session of Congress which have become Federal laws. It may be used in conjunction with "P L U S" (Public Laws Update Service) on 202–741–6043. This list is also available online at *http://www.archives.gov/federal-register/laws.html*.

The text of laws is not published in the **Federal Register** but may be ordered in "slip law" (individual pamphlet) form from the Superintendent of Documents, U.S. Government Printing Office, Washington, DC 20402 (phone, 202–512–1808). The text will also be made available on the Internet from GPO Access at *http://www.gpoaccess.gov/plaws/index.html*. Some laws may not yet be available.

S. 1413/P.L. 109–89

To redesignate the Crowne Plaza in Kingston, Jamaica as the Colin L. Powell Residential Plaza. (Oct. 13, 2005; 119 Stat. 2063)

Last List October 12, 2005

Public Laws Electronic Notification Service (PENS)

PENS is a free electronic mail notification service of newly enacted public laws. To subscribe, go to *http://listserv.gsa.gov/archives/publaws-l.html*

Note: This service is strictly for E-mail notification of new laws. The text of laws is not available through this service. **PENS** cannot respond to specific inquiries sent to this address.

CFR CHECKLIST

This checklist, prepared by the Office of the Federal Register, is published weekly. It is arranged in the order of CFR titles, stock numbers, prices, and revision dates.

An asterisk (*) precedes each entry that has been issued since last week and which is now available for sale at the Government Printing Office.

A checklist of current CFR volumes comprising a complete CFR set, also appears in the latest issue of the LSA (List of CFR Sections Affected), which is revised monthly.

The CFR is available free on-line through the Government Printing Office's GPO Access Service at http://www.access.gpo.gov/nara/cfr/index.html. For information about GPO Access call the GPO User Support Team at 1-888-293-6498 (toll free) or 202-512-1530.

The annual rate for subscription to all revised paper volumes is $1195.00 domestic, $298.75 additional for foreign mailing.

Mail orders to the Superintendent of Documents, Attn: New Orders, P.O. Box 371954, Pittsburgh, PA 15250–7954. All orders must be accompanied by remittance (check, money order, GPO Deposit Account, VISA, Master Card, or Discover). Charge orders may be telephoned to the GPO Order Desk, Monday through Friday, at **(202) 512–1800** from 8:00 a.m. to 4:00 p.m. eastern time, or FAX your charge orders to **(202) 512-2250**.

Title	Stock Number	Price	Revision Date
1	(869–056–00001–4)	5.00	Jan. 1, 2005
2	(869–056–00002–2)	5.00	Jan. 1, 2005
3 (2003 Compilation and Parts 100 and 101)	(869–056–00003–1)	35.00	[1] Jan. 1, 2005
4	(869–056–00004–9)	10.00	[4] Jan. 1, 2005
5 Parts:			
1–699	(869–056–00005–7)	60.00	Jan. 1, 2005
700–1199	(869–056–00006–5)	50.00	Jan. 1, 2005
1200–End	(869–056–00007–3)	61.00	Jan. 1, 2005
6	(869–056–00008–1)	10.50	Jan. 1, 2005
7 Parts:			
1–26	(869–056–00009–0)	44.00	Jan. 1, 2005
27–52	(869–056–00010–3)	49.00	Jan. 1, 2005
53–209	(869–056–00011–1)	37.00	Jan. 1, 2005
210–299	(869–056–00012–0)	62.00	Jan. 1, 2005
300–399	(869–056–00013–8)	46.00	Jan. 1, 2005
400–699	(869–056–00014–6)	42.00	Jan. 1, 2005
700–899	(869–056–00015–4)	43.00	Jan. 1, 2005
900–999	(869–056–00016–2)	60.00	Jan. 1, 2005
1000–1199	(869–056–00017–1)	22.00	Jan. 1, 2005
1200–1599	(869–056–00018–9)	61.00	Jan. 1, 2005
1600–1899	(869–056–00019–7)	64.00	Jan. 1, 2005
1900–1939	(869–056–00020–1)	31.00	Jan. 1, 2005
1940–1949	(869–056–00021–9)	50.00	Jan. 1, 2005
1950–1999	(869–056–00022–7)	46.00	Jan. 1, 2005
2000–End	(869–056–00023–5)	50.00	Jan. 1, 2005
8	(869–056–00024–3)	63.00	Jan. 1, 2005
9 Parts:			
1–199	(869–056–00025–1)	61.00	Jan. 1, 2005
200–End	(869–056–00026–0)	58.00	Jan. 1, 2005
10 Parts:			
1–50	(869–056–00027–8)	61.00	Jan. 1, 2005
51–199	(869–056–00028–6)	58.00	Jan. 1, 2005
200–499	(869–056–00029–4)	46.00	Jan. 1, 2005
500–End	(869–056–00030–8)	62.00	Jan. 1, 2005
11	(869–056–00031–6)	41.00	Jan. 1, 2005
12 Parts:			
1–199	(869–056–00032–4)	34.00	Jan. 1, 2005
200–219	(869–056–00033–2)	37.00	Jan. 1, 2005
220–299	(869–056–00034–1)	61.00	Jan. 1, 2005
300–499	(869–056–00035–9)	47.00	Jan. 1, 2005
500–599	(869–056–00036–7)	39.00	Jan. 1, 2005
600–899	(869–056–00037–5)	56.00	Jan. 1, 2005
900–End	(869–056–00038–3)	50.00	Jan. 1, 2005
13	(869–056–00039–1)	55.00	Jan. 1, 2005
14 Parts:			
1–59	(869–056–00040–5)	63.00	Jan. 1, 2005
60–139	(869–056–00041–3)	61.00	Jan. 1, 2005
140–199	(869–056–00042–1)	30.00	Jan. 1, 2005
200–1199	(869–056–00043–0)	50.00	Jan. 1, 2005
1200–End	(869–056–00044–8)	45.00	Jan. 1, 2005
15 Parts:			
0–299	(869–056–00045–6)	40.00	Jan. 1, 2005
300–799	(869–056–00046–4)	60.00	Jan. 1, 2005
800–End	(869–056–00047–2)	42.00	Jan. 1, 2005
16 Parts:			
0–999	(869–056–00048–1)	50.00	Jan. 1, 2005
1000–End	(869–056–00049–9)	60.00	Jan. 1, 2005
17 Parts:			
1–199	(869–056–00051–1)	50.00	Apr. 1, 2005
200–239	(869–056–00052–9)	58.00	Apr. 1, 2005
240–End	(869–056–00053–7)	62.00	Apr. 1, 2005
18 Parts:			
1–399	(869–056–00054–5)	62.00	Apr. 1, 2005
400–End	(869–056–00055–3)	26.00	[9] Apr. 1, 2005
19 Parts:			
1–140	(869–056–00056–1)	61.00	Apr. 1, 2005
141–199	(869–056–00057–0)	58.00	Apr. 1, 2005
200–End	(869–056–00058–8)	31.00	Apr. 1, 2005
20 Parts:			
1–399	(869–056–00059–6)	50.00	Apr. 1, 2005
400–499	(869–056–00060–0)	64.00	Apr. 1, 2005
500–End	(869–056–00061–8)	63.00	Apr. 1, 2005
21 Parts:			
1–99	(869–056–00062–6)	42.00	Apr. 1, 2005
100–169	(869–056–00063–4)	49.00	Apr. 1, 2005
170–199	(869–056–00064–2)	50.00	Apr. 1, 2005
200–299	(869–056–00065–1)	17.00	Apr. 1, 2005
300–499	(869–056–00066–9)	31.00	Apr. 1, 2005
500–599	(869–056–00067–7)	47.00	Apr. 1, 2005
600–799	(869–056–00068–5)	15.00	Apr. 1, 2005
800–1299	(869–056–00069–3)	58.00	Apr. 1, 2005
1300–End	(869–056–00070–7)	24.00	Apr. 1, 2005
22 Parts:			
1–299	(869–056–00071–5)	63.00	Apr. 1, 2005
300–End	(869–056–00072–3)	45.00	Apr. 1, 2005
23	(869–056–00073–1)	45.00	Apr. 1, 2005
24 Parts:			
0–199	(869–056–00074–0)	60.00	Apr. 1, 2005
200–499	(869–056–00074–0)	50.00	Apr. 1, 2005
500–699	(869–056–00076–6)	30.00	Apr. 1, 2005
700–1699	(869–056–00077–4)	61.00	Apr. 1, 2005
1700–End	(869–056–00078–2)	30.00	Apr. 1, 2005
25	(869–056–00079–1)	63.00	Apr. 1, 2005
26 Parts:			
§§ 1.0–1–1.60	(869–056–00080–4)	49.00	Apr. 1, 2005
§§ 1.61–1.169	(869–056–00081–2)	63.00	Apr. 1, 2005
§§ 1.170–1.300	(869–056–00082–1)	60.00	Apr. 1, 2005
§§ 1.301–1.400	(869–056–00083–9)	46.00	Apr. 1, 2005
§§ 1.401–1.440	(869–056–00084–7)	62.00	Apr. 1, 2005
§§ 1.441–1.500	(869–056–00085–5)	57.00	Apr. 1, 2005
§§ 1.501–1.640	(869–056–00086–3)	49.00	Apr. 1, 2005
§§ 1.641–1.850	(869–056–00087–1)	60.00	Apr. 1, 2005
§§ 1.851–1.907	(869–056–00088–0)	61.00	Apr. 1, 2005
§§ 1.908–1.1000	(869–056–00089–8)	60.00	Apr. 1, 2005
§§ 1.1001–1.1400	(869–056–00090–1)	61.00	Apr. 1, 2005
§§ 1.1401–1.1550	(869–056–00091–0)	55.00	Apr. 1, 2005
§§ 1.1551–End	(869–056–00092–8)	55.00	Apr. 1, 2005
2–29	(869–056–00093–6)	60.00	Apr. 1, 2005
30–39	(869–056–00094–4)	41.00	Apr. 1, 2005
40–49	(869–056–00095–2)	28.00	Apr. 1, 2005
50–299	(869–056–00096–1)	41.00	Apr. 1, 2005

Title	Stock Number	Price	Revision Date
300–499	(869–056–00097–9)	61.00	Apr. 1, 2005
500–599	(869–056–00098–7)	12.00	[5]Apr. 1, 2005
600–End	(869–056–00099–5)	17.00	Apr. 1, 2005
27 Parts:			
1–199	(869–056–00100–2)	64.00	Apr. 1, 2005
200–End	(869–056–00101–1)	21.00	Apr. 1, 2005
28 Parts:			
0–42	(869–056–00102–9)	61.00	July 1, 2005
43–End	(869–056–00103–7)	60.00	July 1, 2005
29 Parts:			
0–99	(869–056–00104–5)	50.00	July 1, 2005
100–499	(869–056–00105–3)	23.00	July 1, 2005
500–899	(869–056–00106–1)	61.00	July 1, 2005
900–1899	(869–056–00107–0)	36.00	[7]July 1, 2005
1900–1910 (§§ 1900 to 1910.999)	(869–056–00108–8)	61.00	July 1, 2005
1910 (§§ 1910.1000 to end)	(869–056–00109–6)	58.00	July 1, 2005
1911–1925	(869–056–00110–0)	30.00	July 1, 2005
1926	(869–056–00111–8)	50.00	July 1, 2005
1927–End	(869–052–00111–2)	62.00	July 1, 2004
30 Parts:			
1–199	(869–056–00113–4)	57.00	July 1, 2005
*200–699	(869–056–00114–2)	50.00	July 1, 2005
700–End	(869–056–00115–1)	58.00	July 1, 2005
31 Parts:			
0–199	(869–056–00116–9)	41.00	July 1, 2005
200–End	(869–052–00116–3)	65.00	July 1, 2004
32 Parts:			
1–39, Vol. I		15.00	[2] July 1, 1984
1–39, Vol. II		19.00	[2] July 1, 1984
1–39, Vol. III		18.00	[2] July 1, 1984
1–190	(869–056–00119–3)	61.00	July 1, 2005
191–399	(869–056–00120–7)	63.00	July 1, 2005
400–629	(869–056–00121–5)	50.00	July 1, 2005
630–699	(869–056–00122–3)	37.00	July 1, 2005
700–799	(869–056–00123–1)	46.00	July 1, 2005
800–End	(869–056–00124–0)	47.00	July 1, 2005
33 Parts:			
*1–124	(869–056–00125–8)	57.00	July 1, 2005
125–199	(869–052–00124–4)	61.00	July 1, 2004
*200–End	(869–056–00127–4)	57.00	July 1, 2005
34 Parts:			
1–299	(869–056–00128–2)	50.00	July 1, 2005
300–399	(869–056–00129–1)	40.00	[7]July 1, 2005
400–End	(869–052–00128–7)	61.00	July 1, 2004
35	(869–052–00129–5)	10.00	[6]July 1, 2004
36 Parts:			
1–199	(869–056–00131–2)	37.00	July 1, 2005
200–299	(869–056–00132–1)	37.00	July 1, 2005
300–End	(869–056–00133–9)	61.00	July 1, 2005
37	(869–052–00133–3)	58.00	July 1, 2004
38 Parts:			
0–17	(869–056–00135–5)	60.00	July 1, 2005
18–End	(869–056–00136–3)	62.00	July 1, 2005
39	(869–056–00139–1)	42.00	July 1, 2005
40 Parts:			
1–49	(869–056–00138–0)	60.00	July 1, 2005
50–51	(869–052–00138–4)	45.00	July 1, 2004
52 (52.01–52.1018)	(869–052–00139–2)	60.00	July 1, 2004
52 (52.1019–End)	(869–052–00140–6)	61.00	July 1, 2004
53–59	(869–056–00142–8)	31.00	July 1, 2005
60 (60.1–End)	(869–056–00143–6)	58.00	July 1, 2005
60 (Apps)	(869–056–00144–4)	57.00	July 1, 2005
61–62	(869–056–00145–2)	45.00	July 1, 2005
63 (63.1–63.599)	(869–056–00146–1)	58.00	July 1, 2005
63 (63.600–63.1199)	(869–056–00147–9)	50.00	July 1, 2005
63 (63.1200–63.1439)	(869–052–00147–3)	50.00	July 1, 2004
63 (63.1440–63.8830)	(869–052–00148–1)	64.00	July 1, 2004
63 (63.6580–63.8830)	(869–056–00150–9)	32.00	July 1, 2005
63 (63.8980–End)	(869–056–00151–7)	35.00	[7]July 1, 2005
64–71	(869–056–00152–5)	29.00	July 1, 2005
72–80	(869–056–00153–5)	62.00	July 1, 2005
81–85	(869–052–00152–0)	60.00	July 1, 2004
86 (86.1–86.599–99)	(869–052–00153–8)	58.00	July 1, 2004
86 (86.600–1–End)	(869–056–00156–8)	50.00	July 1, 2005
87–99	(869–056–00157–6)	60.00	July 1, 2005
100–135	(869–056–00158–4)	45.00	July 1, 2005
136–149	(869–052–00157–1)	61.00	July 1, 2004
150–189	(869–052–00158–9)	50.00	July 1, 2004
190–259	(869–056–00161–4)	39.00	July 1, 2005
260–265	(869–052–00160–1)	50.00	July 1, 2004
266–299	(869–056–00163–1)	50.00	July 1, 2005
300–399	(869–056–00164–9)	42.00	July 1, 2005
400–424	(869–056–00165–7)	56.00	[8]July 1, 2005
425–699	(869–052–00164–3)	61.00	July 1, 2004
700–789	(869–056–00167–3)	61.00	July 1, 2005
790–End	(869–056–00168–1)	61.00	July 1, 2005
41 Chapters:			
1, 1–1 to 1–10		13.00	[3] July 1, 1984
1, 1–11 to Appendix, 2 (2 Reserved)		13.00	[3] July 1, 1984
3–6		14.00	[3] July 1, 1984
7		6.00	[3] July 1, 1984
8		4.50	[3] July 1, 1984
9		13.00	[3] July 1, 1984
10–17		9.50	[3] July 1, 1984
18, Vol. I, Parts 1–5		13.00	[3] July 1, 1984
18, Vol. II, Parts 6–19		13.00	[3] July 1, 1984
18, Vol. III, Parts 20–52		13.00	[3] July 1, 1984
19–100		13.00	[3] July 1, 1984
1–100	(869–056–00169–0)	24.00	July 1, 2005
101	(869–056–00170–3)	21.00	July 1, 2005
102–200	(869–056–00171–1)	56.00	July 1, 2005
*201–End	(869–056–00172–0)	24.00	July 1, 2005
42 Parts:			
1–399	(869–052–00171–6)	61.00	Oct. 1, 2004
400–429	(869–052–00172–4)	63.00	Oct. 1, 2004
430–End	(869–052–00173–2)	64.00	Oct. 1, 2004
43 Parts:			
1–999	(869–052–00174–1)	56.00	Oct. 1, 2004
1000–end	(869–052–00175–9)	62.00	Oct. 1, 2004
44	(869–052–00176–7)	50.00	Oct. 1, 2004
45 Parts:			
1–199	(869–052–00177–5)	60.00	Oct. 1, 2004
200–499	(869–052–00178–3)	34.00	Oct. 1, 2004
500–1199	(869–052–00179–1)	56.00	Oct. 1, 2004
1200–End	(869–052–00180–5)	61.00	Oct. 1, 2004
46 Parts:			
1–40	(869–052–00181–3)	46.00	Oct. 1, 2004
41–69	(869–052–00182–1)	39.00	Oct. 1, 2004
70–89	(869–052–00183–0)	14.00	Oct. 1, 2004
90–139	(869–052–00184–8)	44.00	Oct. 1, 2004
140–155	(869–052–00185–6)	25.00	Oct. 1, 2004
156–165	(869–052–00186–4)	34.00	Oct. 1, 2004
166–199	(869–052–00187–2)	46.00	Oct. 1, 2004
200–499	(869–052–00188–1)	40.00	Oct. 1, 2004
500–End	(869–052–00189–9)	25.00	Oct. 1, 2004
47 Parts:			
0–19	(869–052–00190–2)	61.00	Oct. 1, 2004
20–39	(869–052–00191–1)	46.00	Oct. 1, 2004
40–69	(869–052–00192–9)	40.00	Oct. 1, 2004
70–79	(869–052–00193–8)	63.00	Oct. 1, 2004
80–End	(869–052–00194–5)	61.00	Oct. 1, 2004
48 Chapters:			
1 (Parts 1–51)	(869–052–00195–3)	63.00	Oct. 1, 2004
1 (Parts 52–99)	(869–052–00196–1)	49.00	Oct. 1, 2004
2 (Parts 201–299)	(869–052–00197–0)	50.00	Oct. 1, 2004
3–6	(869–052–00198–8)	34.00	Oct. 1, 2004
7–14	(869–052–00199–6)	56.00	Oct. 1, 2004
15–28	(869–052–00200–3)	47.00	Oct. 1, 2004

Title	Stock Number	Price	Revision Date
29–End	(869–052–00201–1)	47.00	Oct. 1, 2004
49 Parts:			
1–99	(869–052–00202–0)	60.00	Oct. 1, 2004
100–185	(869–052–00203–8)	63.00	Oct. 1, 2004
186–199	(869–052–00204–6)	23.00	Oct. 1, 2004
200–399	(869–052–00205–4)	64.00	Oct. 1, 2004
400–599	(869–052–00206–2)	64.00	Oct. 1, 2004
600–999	(869–052–00207–1)	19.00	Oct. 1, 2004
1000–1199	(869–052–00208–9)	28.00	Oct. 1, 2004
1200–End	(869–052–00209–7)	34.00	Oct. 1, 2004
50 Parts:			
1–16	(869–052–00210–1)	11.00	Oct. 1, 2004
17.1–17.95	(869–052–00211–9)	64.00	Oct. 1, 2004
17.96–17.99(h)	(869–052–00212–7)	61.00	Oct. 1, 2004
17.99(i)–end and 17.100–end	(869–052–00213–5)	47.00	Oct. 1, 2004
18–199	(869–052–00214–3)	50.00	Oct. 1, 2004
200–599	(869–052–00215–1)	45.00	Oct. 1, 2004
600–End	(869–052–00216–0)	62.00	Oct. 1, 2004
CFR Index and Findings Aids	(869–052–00049–3)	62.00	Jan. 1, 2004
Complete 2005 CFR set		1,342.00	2005
Microfiche CFR Edition:			
Subscription (mailed as issued)		325.00	2005
Individual copies		4.00	2005
Complete set (one-time mailing)		325.00	2004
Complete set (one-time mailing)		298.00	2003

[1] Because Title 3 is an annual compilation, this volume and all previous volumes should be retained as a permanent reference source.

[2] The July 1, 1985 edition of 32 CFR Parts 1–189 contains a note only for Parts 1–39 inclusive. For the full text of the Defense Acquisition Regulations in Parts 1–39, consult the three CFR volumes issued as of July 1, 1984, containing those parts.

[3] The July 1, 1985 edition of 41 CFR Chapters 1–100 contains a note only for Chapters 1 to 49 inclusive. For the full text of procurement regulations in Chapters 1 to 49, consult the eleven CFR volumes issued as of July 1, 1984 containing those chapters.

[4] No amendments to this volume were promulgated during the period January 1, 2004, through January 1, 2005. The CFR volume issued as of January 1, 2004 should be retained.

[5] No amendments to this volume were promulgated during the period April 1, 2000, through April 1, 2005. The CFR volume issued as of April 1, 2000 should be retained.

[6] No amendments to this volume were promulgated during the period July 1, 2000, through July 1, 2004. The CFR volume issued as of July 1, 2000 should be retained.

[7] No amendments to this volume were promulgated during the period July 1, 2004, through July 1, 2005. The CFR volume issued as of July 1, 2004 should be retained.

[8] No amendments to this volume were promulgated during the period July 1, 2004, through July 1, 2005. The CFR volume issued as of July 1, 2003 should be retained.

[9] No amendments to this volume were promulgated during the period April 1, 2004, through April 1, 2005. The CFR volume issued as of April 1, 2004 should be retained.