Federal Register

Friday,
December 30, 2005

Part II

Department of Transportation

National Highway Traffic Safety Administration

49 CFR Part 571

Federal Motor Vehicle Safety Standards; Lamps, Reflective Devices, and Associated Equipment; Proposed Rule

DEPARTMENT OF TRANSPORTATION

National Highway Traffic Safety Administration

49 CFR Part 571

[Docket No. NHTSA–2005–22093]

RIN 2127–AJ75

Federal Motor Vehicle Safety Standards; Lamps, Reflective Devices, and Associated Equipment

AGENCY: National Highway Traffic Safety Administration (NHTSA), Department of Transportation.

ACTION: Notice of proposed rulemaking (NPRM).

SUMMARY: Our safety standard on lamps, reflective devices, and associated equipment specifies performance requirements intended to reduce the incidence of vehicle crashes by providing adequate illumination of the roadway and by enhancing motor vehicle conspicuity in daylight, darkness, and other conditions of reduced visibility. As a result of various safety initiatives and technological advances in vehicle lighting, numerous amendments to the regulatory text have left the standard unwieldy and unnecessarily complicated. In addition, the standard's provisions have been interpreted frequently by the agency over the past several decades in response to interpretation request letters. This document proposes to amend the standard by reorganizing the regulatory text so that it provides a more straight-forward and logical presentation of the applicable regulatory requirements, which includes the agency's interpretation of the existing requirements. This proposal would not impose any new substantive requirements on manufacturers.

DATES: You should submit your comments early enough to ensure that Docket Management receives them not later than March 30, 2006.

ADDRESSES: You may submit comments identified by the DOT Docket Number cited in the heading of this document by any of the following methods:

- Web site: *http://dms.dot.gov.* Follow the instructions for submitting comments on the DOT electronic docket site.
- Fax: 1–202–493–2251.
- Mail: Docket Management Facility; U.S. Department of Transportation, 400 7th Street, SW., Nassif Building, Room PL–401, Washington, DC 20590–0001.
- Hand Delivery: Room PL–401, 400 7th Street, SW., Washington, DC, between 9 am and 5 pm, Monday through Friday, except Federal Holidays.
- Federal eRulemaking Portal: Go to *http://www.regulations.gov.* Follow the online instructions for submitting comments.

Instructions: All submissions must include the agency name and docket number. Note that all comments received will be posted without change to *http://dms.dot.gov* including any personal information provided. Please see the Privacy Act heading under Rulemaking Analyses and Notices.

Docket: For access to the docket to read background documents or comments received, go to *http://dms.dot.gov* at any time or to Room PL–401 on the plaza level of the Nassif Building, 400 Seventh Street, SW., Washington, DC, between 9 am and 5 pm, Monday through Friday, except Federal Holidays.

FOR FURTHER INFORMATION CONTACT: For technical issues: David Hines, Office of Crash Avoidance Standards (NVS–121), NHTSA, 400 Seventh Street, SW., Washington, DC 20590. (Telephone: (202) 493–0245) (Fax: (202) 366–7002).

For legal issues: Eric Stas, Office of the Chief Counsel (NCC–112), NHTSA, 400 Seventh Street, SW., Washington, DC 20590 (Telephone: (202) 366–2992) (Fax: (202) 366–3820).

SUPPLEMENTARY INFORMATION:

Table of Contents

I. Executive Summary
II. Background
  A. Historical Overview of the Standard
  B. The Need for an Administrative Re-write of the Standard
III. Agency Proposal
  A. Summary of the Proposal
  B. Process for Developing the Administrative Re-write
  1. Review of Existing Regulatory Text
  2. Review of Existing Interpretation Letters
  3. Structure of the Revised Standard
  4. Incorporations by Reference
  C. Effective Date
IV. Benefits and Costs
V. Public Participation
VI. Rulemaking Analyses and Notices

I. Executive Summary

The agency is proposing to amend Federal Motor Vehicle Safety Standard (FMVSS) No. 108, *Lamps, reflective devices, and associated equipment,* by reorganizing the regulatory text and directly importing requirements from applicable Society of Automotive Engineers (SAE) standards currently incorporated by reference into the standard. The main objective of this re-write is to increase clarity by: (1) Making requirements easier to find and comprehend; (2) presenting performance requirements and test procedures together through the inclusion of relevant provisions of third-party documents (currently incorporated by reference) directly into the regulatory text of the standard; and (3) updating Standard No. 108 to reflect letters of interpretation.

The re-write of FMVSS No. 108 is considered to be administrative in nature because the standard's existing requirements and obligations are not being increased, decreased, or substantively modified. Accordingly, costs associated with manufacturer compliance with Standard No. 108 are not expected to change as a result of this regulatory action.

II. Background

A. Historical Overview of the Standard

The initial version of FMVSS No. 108 was adopted almost 40 years ago [1] to increase motor vehicle safety by establishing requirements for vehicle lighting, reflective devices, and associated equipment. In developing the standard, NHTSA incorporated requirements from a number of industry consensus standards, in particular SAE standards. At that time, motor vehicle technologies were relatively simple, as compared to today's designs. For example, motor vehicle headlighting systems were limited to ones consisting of either two 7-inch or four 5¾-inch round sealed beam units. During the ensuing years, a number of rectangular sealed beam units, replaceable bulb headlamps, and integral beam headlamps were developed, and FMVSS No. 108 was amended to permit the use of these new technologies. Later, the standard was further amended to add requirements for center high-mounted stop lamps, side marker lamps, and side reflex reflectors, to allow for daytime running lamps, and to address the conspicuity needs of large vehicles. However, such amendments were made on an *ad hoc* basis, which, over time, resulted in a patchwork organization for FMVSS No. 108.

Furthermore, when regulated parties had questions regarding how FMVSS No. 108 should be interpreted (in many instances due to rapid advances in lighting technology not fully anticipated or addressed by the existing regulatory text), they submitted requests for interpretation to the agency on specific issues. Since its promulgation, there has been a large number of interpretation letters issued on FMVSS No. 108. Thus, in its current state, FMVSS No. 108 has

[1] The final rule which first promulgated FMVSS No. 108 was published on February 3, 1967, with an effective date of January 1, 1968 (*see* 32 FR 2408).

requirements that are located directly in its regulatory text, located in referenced SAE standards, and elaborated upon in various agency interpretations. Since its inception, NHTSA has never completed a thorough reorganization of the entire standard.

B. The Need for an Administrative Re-write of the Standard

Due to concerns about being able to locate requirements efficiently and the apparent lack of clarity associated with the standard as demonstrated by an abundance of letters of interpretation, we have decided to undertake an administrative re-write of FMVSS No. 108. The agency has also received complaints that the current text of FMVSS No. 108 sometimes results in confusion, in part due to the way it is organized. In present form, FMVSS No. 108 does not group all requirements for a particular lamp together. Regulated parties have stated that the current organization of FMVSS No. 108 makes it difficult for them, at times, to be fully confident that all applicable requirements have been identified and satisfied prior to certification to the standard. Also, the large number of interpretations that has been issued by the agency regarding Standard No. 108 makes it difficult for interested parties to locate and identify the agency's position on relevant issues. In addition, regulated parties have conveyed to the agency in recent years that some of the older SAE standards incorporated by reference into FMVSS No. 108 are no longer readily available from SAE International.

The agency believes that interested parties should have easy access to the requirements of the standard, and, therefore, we believe there would be value in publishing requirements that are currently contained in third-party documents directly within FMVSS No. 108 itself. For example, the performance requirements and associated test procedures for various lamps are currently contained in several referenced SAE standards. However, the agency believes it would be beneficial to incorporate these requirements, without change, directly into the regulatory text of FMVSS No. 108. The same logic applies to our decision to propose including the results of relevant legal interpretations into the standard. Furthermore, several provisions in Standard No. 108 refer to regulatory inception dates that are several years in the past, so the agency is proposing to eliminate text citing such past dates.

For these reasons, we believe that the benefits of an administrative re-write of FMVSS No. 108 (*e.g.*, making the standard more navigable and thereby facilitating compliance with existing requirements) justify the necessary commitment of agency resources to accomplish this reorganization of the standard.

III. Agency Proposal

A. Summary of the Proposal

The agency is proposing to reorganize FMVSS No. 108 in such a manner as to make it more understandable (*e.g.*, by adopting a simplified numbering scheme) and to reduce references to third-party documents. This administrative re-write attempts to organize related materials in a logical and consistent manner that improves the clarity of the requirements, thereby increasing its utility for interested parties. As proposed, the reorganized standard would progress from vehicle-level requirements to device-level requirements, beginning with the most common requirements and then proceeding to exceptions. In order to make requirements easier to find, we are proposing to add a Table of Contents as an appendix to the standard. In addition, a list of figures and cross-reference roadmaps are included as a part of this proposal in order to indicate where specific requirements currently in FMVSS No. 108 would reside in the reorganized regulatory text of the standard.

This document also proposes to move figures addressing sealed beam headlamps that are currently included in FMVSS No. 108 and SAE J1383 (APR 1985) into 49 CFR Part 564 as a newly-created Appendix C. Consistent with our understanding that few lighting manufacturers still produce sealed beam headlamps, we see few drawbacks to consolidating the information regarding sealed beam light sources with other light source information currently located in 49 CFR Part 564, *Replaceable Light Source Information.*

By way of overview, requirements in the proposed re-write of FMVSS No. 108 are consolidated into dedicated paragraphs. The first several paragraphs (S1 through S4) would be organized in the same manner as the present standard, although we note that S4, *Definitions,* has been expanded to incorporate relevant definitions from the applicable SAE standards previously incorporated as part of Standard No. 108. S5 would address the remaining references to SAE standards.

Whereas Standard No. 108 currently references approximately 35 different SAE documents in nearly 100 separate instances, the proposed re-write references eight SAE documents, which we believe will not be commonly used by regulated parties. Performance requirements and physical and environmental test procedures currently located in SAE standards, including but not limited to SAE J575d (Aug 1967), SAE J 575e (Aug 1970), SAE J575 (Dec 1988), SAE J565b (Feb 1969), SAE J580 (Dec 1986), SAE J565b (Feb 1969), SAE J590b (Oct 1965), and SAE J945 (Feb 1966), have been included in Tables XXI to XXIII of FMVSS No. 108 as part of the proposed re-write. To the extent possible, the proposed re-write limits the amount of references within the regulatory text to other sections of the standard.

As an organizational improvement, the proposal addresses vehicle-level requirements in S6, including requirements by vehicle type. Following that, requirements are organized with dedicated sections for each type of lamp and reflective device, beginning with signal lamps, reflective devices and associated equipment under S7 and headlamp and headlighting requirements under S8 through S13, and S16 through S18. S14 addresses aimability performance requirements, while S15 covers replaceable light sources (including references to Part 564). The agency believes this format would make the standard more comprehensible and user-friendly.

From a regulatory perspective, it is our intention that this administrative re-write of Standard No. 108 would neither result in any current obligation being diminished, nor any new obligation being imposed. Therefore, we do not believe that vehicle manufacturers and lighting manufacturers would have to make any changes to their respective products or production processes if this proposal were made final. Accordingly, we are proposing to make the proposed revisions effective 180 days after publication of the final rule. Voluntary early compliance with the reorganized standard is proposed to be permitted immediately, although the substantive requirements are identical under both versions.

B. Process for Developing the Administrative Re-Write

1. Review of Existing Regulatory Text

The agency began this administrative re-write process by reviewing the existing regulatory text of Standard No. 108, including requirements that are currently incorporated by reference from SAE standards. During the course of this extensive review, it became apparent that FMVSS No. 108 could be organized in a more efficient manner. We noted that, in many instances,

requirements for a specific lamp are located throughout FMVSS No. 108. In many cases, the regulatory text of the standard references other sections within the standard, which made review cumbersome. In other cases, FMVSS No. 108 contains specific performance requirements but does not contain the applicable test procedure (which is located in the cited SAE standard); the agency noted it would be much easier to simultaneously review both the test procedures and performance requirements if that information were consolidated in one location, in contrast to the current arrangement.

2. Review of Existing Interpretation Letters

Because there have been over two thousand interpretation letters issued by the agency regarding FMVSS No. 108 since the standard was initially implemented, we attempted to identify the most significant ones. The criteria used in determining whether an interpretation was significant focused on whether it provided value in clarifying the provisions in the standard. In the vast majority of cases, requests for interpretation have identified questions regarding applicability of certain provisions to specific design configurations. These interpretations were not included, because we tentatively concluded they would not add value to the regulatory text.

Using this approach, in order to clarify the current requirements of FMVSS No. 108, the re-write proposal contains text from the following key interpretation letters (each of which is briefly described in the following paragraphs), to Mr. Alkire [2] (11/28/89), Mr. Camp [3] (6/17/97), Mr. Clarke [4] (7/28/05), Mr. Farber [5] (5/26/00), Mr. King [6] (7/12/00), Mr. Parkyn [7] (6/1/98), and Mr. Spingler (7/2/99 [8] and 4/6/00 [9]). (Each of these interpretations is discussed below, although only to the extent necessary to describe the key principle(s) being incorporated as part of the administrative re-write of FMVSS No. 108.) It also reflects our notice of interpretation concerning replacement equipment published in the **Federal Register** (70 FR 65972) on November 1, 2005. The agency invites input from interested parties regarding additional interpretations that they believe should be included in the final rule for this administrative re-write, including identification of the interpretation, specific text to consider, and the applicable paragraph of the re-write where it should be added.

The Alkire interpretation addressed questions regarding modifications that may take a vehicle out of compliance and what parties are prohibited from making such modifications. It states, ''This standard [FMVSS 108] must be met when the vehicle is manufactured, and when it is sold to its first purchaser (i.e., dealer-installed equipment must not affect compliance of the vehicle with the safety standards).'' Because dealers are increasingly involved in installing equipment and accessories to vehicles before they are initially sold and those items usually raise obstruction issues, explicit language was incorporated in S6.2.2 of this proposal to address obstruction.

The Camp interpretation established that running boards are considered substantially similar to other items of equipment such as signal lamps, marker lamps, outside rearview mirrors, flexible fender extensions, mud flaps, and outside door handles, and thus should be likewise excluded from the definition of ''overall width'' that currently resides in obscurity as footnote 1 to Table IV of Standard No. 108. All definitions specific to FMVSS No. 108 are located in S4 of this proposal, including ''overall width.'' Adding running boards to that definition consolidates all exclusions and clarifies the requirement.

The Clarke interpretation responded to a request to clarify how close auxiliary lamps may be mounted to required identification lamps to avoid impairment. FMVSS No. 108 requires that the three lamps that make up the identification lamp cluster be spaced from 6 to 12 inches apart. This unique appearance serves as a signal to other drivers that the vehicle, so equipped, is a large vehicle. Therefore, our interpretation letter stated that in making an impairment determination, the agency considers how close the identification lamps are spaced to each other, as well as to the auxiliary lamps. In that letter, the agency stated that positioning auxiliary lamps at a distance that is at least twice the distance that separates each lamp in the required three-lamp cluster provides sufficient separation not to impair the effectiveness of the three lamp cluster. This language was included in S6.2.5 of this proposal. In addition, the Clarke interpretation also emphasized that auxiliary lamps must be designed to comply with the photometric output and be of the same color as required lamps to avoid impairment. This requirement is contained in S6.2.3 of this proposal to add clarity.

The Farber interpretation addressed the issue of what actions are permitted to cause the stop lamps to illuminate. The current explicit language in FMVSS No. 108 requires that stop lamps illuminate ''upon application of the service brakes.'' In this interpretation letter, NHTSA discussed the fact that any item of vehicle equipment that diminishes the speed of a vehicle beyond normally achievable coast-down deceleration creates an appearance to a following driver equivalent to that of a service brake application. Therefore, it would be permissible for the stop lamps to be illuminated when a device such as an engine retarder, transmission downshifting device, or similar item acts to slow the vehicle, because such illumination would not create any confusion in the mind of a following driver and thus would not ''impair the effectiveness'' of the required stop lamps. Accordingly, this proposal states in S6.1.5.1 (*Stop lamp activation*): ''Each stop lamp may also be activated when the vehicle is slowed by a device designed to retard the motion of the vehicle.'' This language also appears in each of the three ''Stop Lamps'' rows in the ''Device Activation'' column of Table I.

The King interpretation concerned lamp systems (such as stop lamps, turn signal lamps, and taillamps), that consist of two closely mounted lamps, one of which is mounted on the outer edge of the deck lid and the other mounted adjacent on the rear quarter panel. The photometric requirements for stop lamps, rear turn signal lamps, and taillamps must be determined based upon how many such individual lamps or individual lighted sections in a single lamp are present. In the situation described in the King interpretation, there were two discrete, physically-separate lamps each having a portion of the total stop, turn signal, and tail function for one side of the vehicle. Mr. King asked whether both functions, when considered together, must be designed to comply with the two-lighted-section photometry requirement for that function, or whether the lamp mounted on the rear quarter panel must be designed to comply with the single-lighted-compartment photometric requirement for that function. NHTSA confirmed that in the situation described, the lamp that is mounted on the rear quarter panel is the one that must be designed to comply with FMVSS No. 108 because it will be visible at all times. In contrast, the lamp

[2] *http://isearch.nhtsa.gov/files/2169y.html.*
[3] *http://isearch.nhtsa.gov/files/15309.ztv.html.*
[4] *http://isearch.nhtsa.gov/files/GF002551.3.html.*
[5] *http://isearch.nhtsa.gov/files/21341.ztv.html.*
[6] *http://isearch.nhtsa.gov/files/21605.ztv.html.*
[7] *http://isearch.nhtsa.gov/files/17690.ztv.html.*
[8] *http://isearch.nhtsa.gov/files/19548.ztv.html.*
[9] *http://isearch.nhtsa.gov/files/21406.ztv.html.*

mounted to the deck lid would be considered supplemental lighting equipment because it could be out of design position if the vehicle is operated with the lid open. In order to clarify FMVSS 108's requirements in such situations, S6.1.3 (Mounting location and height) of this proposal includes the following sentence: ''When multiple lamp arrangements of or multiple compartment rear turn signal lamps, stop lamps, or taillamps are used, with only a portion of the compartments or lamps installed on a fixed body panel of the vehicle, that portion must meet at least the photometric requirements for the appropriate single compartment lamp.''

The Parkyn interpretation responded to a request for clarification regarding photometric requirements for stop lamps installed on motor-driven cycles. Regarding such lamps, the applicable section of the current version of FMVSS No. 108 states the required photometric output ''for the group of test points specified in Figure 1 is at least one-half of the minimum values set forth in that figure.'' The process of determining the photometric requirements for parking lamps, taillamps, and motor-driven cycle stop lamps in FMVSS No. 108 is a multi-step procedure requiring a calculation based on values found in Figures 1A, 1B, and 1C. NHTSA stated the result of the proper calculation for a single lighted section motor-driven cycle stop lamp was 26 candela in Zones 1 and 5, 50 candela in Zones 2 and 4, and 190 candela in Zone 3. To simplify this requirement, this proposal has obviated the need for such calculations by eliminating the content of Figures 1A, 1B, and 1C, choosing instead to place the specific photometric values into new Table XIV for parking lamps, Table VIII for taillamps, and Table IX for stop lamps. Footnote 5 of Table IX specifically notes the portion that applies to motor-driven cycle stop lamps.

The letter of interpretation issued to Mr. Spingler on July 2, 1999 responded to a request for clarification as to whether there are any lateral limits on headlamp lower beam photometry in the area from 10°U to 90°U. Currently, FMVSS No. 108 Figures 15–1, 15–2, 17–1, 17–2, 28–1, and 28–2, which address lower beam headlamp photometry, require a maximum of 125 candela in the area of 10°U to 90°U but do not cite any lateral limits in that area. In our interpretation to Mr. Spingler, NHTSA stated, ''The Figures do not state where in space from left to right to locate the vertical line, and thus, they do not specify that a line is to be measured. It follows that the only description of a set of test points is that of the entire area from 90L to 90R and 10U to 90U, i.e., an area from the extreme left of the test point grid to the extreme right of the test point grid, with an elevation of from 10U to 90U.'' This requirement has been explicitly incorporated in Table XIX of this proposal, which specifies lateral limits of 90°L to 90°R in the area of 10°U to 90°U.

The letter of interpretation issued to Mr. Spingler on April 6, 2000 concerned the procedure for measuring the cut-off parameter in a visually/optically aimable headlamp, specifically the appropriate measurement distance and photo sensor aperture size. In that letter, we stated that the intent of the negotiated rulemaking, which culminated with the amendments to FMVSS No. 108 permitting visually-optically aimed headlamps, was to specify that the cut-off parameter should be measured and aimed at a distance of 10 meters using a photosensor with a 10 millimeter diameter. The letter also confirmed that compliance with photometric requirements is determined at 18.3 meters. NHTSA also stated its intent to include these requirements in a future amendment to FMVSS 108. This proposal fulfills that commitment by proposing to include these requirements in S14.10.1.5.

3. Structure of the Revised Standard

The agency developed the general approach for this proposal to reorganize FMVSS No. 108 through coordinated efforts between NHTSA and a lighting consultant with whom the agency contracted. The proposed structure for this administrative re-write follows that of a report submitted under this contract (which may be found in the docket for this rulemaking), beginning with the most common requirements and then proceeding to exceptions and permutations. As proposed, the standard progresses from vehicle-level requirements to device-level requirements, consolidated from a structural perspective to the extent possible. References to third-party documents have been eliminated, to the extent possible, with applicable requirements instead being included directly in the text of FMVSS No. 108.

The following provides an overview of the provisions contained in the revised standard, as proposed. As previously mentioned, paragraphs S1 through S4 are nearly identical to the existing standard. S5 makes clear that some SAE documents continue to be incorporated by reference in FMVSS No. 108 and states that a list of those SAE documents may be found in 49 CFR 571.5(j). (We note that while 49 CFR 571.5 (j) does not currently exist, a recent NPRM [10] published in the **Federal Register** proposed to establish 49 CFR 571.5 as a centralized repository of all third-party documents incorporated by reference in our FMVSSs.)

As proposed, we have reorganized S6 to include the vehicle-level requirements for motor vehicle lighting equipment. The basic parameters for such equipment, including quantity required, color, mounting, and activation, are addressed. Supplementing S6 is Table I. Table I specifies requirements for the above parameters for each lamp and reflective device. In terms of hierarchy, Table I is organized by starting with equipment required on all vehicles (except trailers and motorcycles), and then listing other required or optional devices that are necessary depending on the specific width, length, weight, construction, or purpose of a vehicle. This process is subsequently repeated for trailers and motorcycles.

Proposed Table I also incorporates the content from Tables I, II, III, and IV of current FMVSS No. 108, as well as activation requirements from the text of the current standard. The term ''activation'' is given the same meaning in both the proposed re-write and the current version of FMVSS No. 108; that term refers to how the light sources for specific lighting functions are energized. Some of these requirements are currently identified as ''wiring'' requirements under FMVSS No. 108, but because of problems associated with imprecise usage of that term, we have decided not to use it to describe energizing light sources in the re-write.

S6 also describes additional equipment that may be installed under the standard, such as Daytime Running Lamps (DRLs) and additional quantities of required devices above those needed to make a vehicle compliant with the standard. A recent letter of interpretation (the previously discussed letter of interpretation to Mr. Clarke) concerning the installation of auxiliary identification lamps is reflected in this section. The requirement that additional equipment cannot impair the effectiveness of required equipment is also included under S6, along with requirements that arise when a lamp or reflective device is obscured by another item of equipment. Permitted and prohibited combinations of lamps and reflective devices are included in S6.3,

[10] 70 FR 36094 (June 22, 2005). This NPRM primarily addressed the definition of ''designated seating position'' (*see* Docket No. NHTSA–2005–21600–1).

and S6.4 deals with the requirements of effective projected luminous lens area and visibility. Specific effective projected luminous lens area and visibility requirements for all lamps are listed in Tables IV and V.

The use of ''DOT'' and ''DRL'' markings is explained in S6.5. We note that although we considered consolidating all marking requirements into one section, such an approach proved to be unattainable because of the organizational structure chosen for the re-write. Because the ''DOT'' marking is the one that has the widest applicability for items of equipment regulated under FMVSS No. 108 items and in light of the prominent position of S6.5, we do not believe that it would be overlooked by future users.

S6.6 lists the various items of associated equipment required on regulated vehicles. It also includes requirements for a license plate holder previously referenced in SAE J587 (OCT 1981). Another important provision is S6.7, which covers replacement lighting equipment. The proposed language in the re-write states that such equipment must conform to all requirements except photometry, and it must be designed to conform to photometry requirements, either of the current version of FMVSS No. 108 or the version in effect at the time of manufacture of the original equipment being replaced. This text provides the distinction for older lamp replacements contained in paragraphs S5.8.3 to S5.8.9 of the current standard.

Performance requirements based upon physical tests (*e.g.*, corrosion test, vibration test, dust test) begin at S6.8. Most of the detailed test procedures and performance requirements have been placed in Table XXI for associated equipment, Table XXII for signal lamps, motorcycle headlamps, and reflective devices, and Table XXIII for headlamps. Tests for color and plastic optical materials placed in Table XXII also may apply to headlamps.

S6.8 also includes detailed procedures for photometric testing. For example, one specific test procedure applies to all lamps, except license plate lamps, headlamps, and DRLs. Another test procedure is specifically for license plate lamps, while yet another applies only to DRLs. Headlamps have their own test procedure, as do reflex reflectors and retroreflective sheeting. A major distinction between these different photometry test procedures is the minimum distance required between the sample lamp or reflective device and the photo detector.

Requirements for specific lamps, reflective devices, and items of associated equipment are contained in S7. There is a provision for each individual type of lamp or reflective device, under which design requirements, if any, are listed, and physical test requirements for that item are contained in Table XXII. In addition, the photometric test requirements specific to each signal lamp or reflective device are included in Tables VII through XVII. These tables, along with their footnotes, provide complete photometric requirements for the lamps and reflective devices installed on all regulated vehicles covered under the standard. Photometry requirements generally include minimum and maximum luminous intensities at specific test points or groups of test points, intensities for arrays of multiple lamps or multiple compartment lamps, intensity ratios between the separate functions of optically combined lamps, as well as differing intensities for lamps that perform the same function but are of different colors.

Requirements for conspicuity systems on truck tractors and some trailers are also a part of S7. The text of S7 sets forth presence, performance, and marking requirements, while the application requirements for covered vehicles are contained in Table III. Figures 11, 12–1, 12–2, and 13 visually supplement the narrative explanation in Table III concerning the placement of conspicuity material on these vehicles. Table XVI includes photometry requirements for reflex reflectors, conspicuity reflex reflectors, and retroreflective sheeting. Specific requirements for items of associated equipment are contained in S7.14, while the applicable test requirements are specified in Table XXI.

S8 contains the requirements for headlighting systems and cites Table II, which specifically addresses the four categories of headlamps that are permitted to be installed on vehicles. Each of these categories (sealed beam, integral beam, replaceable bulb, and combination headlighting systems) has specific photometric requirements. The requirements are also dependent upon whether the system is a two-lamp or four-lamp design and whether the headlamps are mechanically or visually aimed. All upper beam photometric requirements are contained in Table XVIII, and all lower beam photometric requirements are contained in Table XIX. S8 also describes how upper beam and lower beam headlamps must be arranged on the vehicle.

Under proposed S9, the standard provides more detailed requirements for sealed beam headlamps, including a statement explaining that basic design information may be found in Appendix C of Part 564. In addition, S9 specifies requirements for a sealed beam headlighting system in which the upper and lower beams are aimed simultaneously. The text also directs the reader to the applicable photometric and physical test requirements for that type of headlighting system.

Similar to the provisions in S9, paragraph S10 contains analogous provisions for integral beam headlamps, and paragraph S11 contains those same type of provisions for replaceable bulb headlamps. S12 contains requirements for combination headlamps. A combination headlamp system, being composed of a combination of specific sealed beam headlamps, integral beam headlamps, or replaceable bulb headlamps, does not have specific performance requirements. Rather, its component parts are required to meet the performance associated with their particular category.

Paragraph S13 contains requirements for motorcycle headlamps. Generally, motorcycles may use one half of any listed headlamp system or a headlighting system exclusive to motorcycles. The standard includes design requirements for the motorcycle-exclusive system in S13 and associated photometry requirements in Table XX. Requirements for motorcycle headlamp modulation systems are also contained in S13.

Paragraph S14 addresses headlamp adjustment and aiming. Headlamps may either be mechanically aimed by an external aiming device that attaches to the lens face, mechanically aimed by using an integral aiming device called a Vehicle Headlamp Aiming Device (VHAD), or be visually-optically aimed. S14 includes specific requirements for each of these aiming systems, and Table XXIII contains physical test requirements for the VHAD system. Requirements for marking the optical axis of a headlamp are also contained in this section.

Paragraph S15, dealing with replaceable light sources, is almost identical to the corresponding section currently in FMVSS No. 108; however, some test procedures and performance requirements have been incorporated into Table XXIII. Paragraph S16, addressing headlamp concealment devices, has been adopted verbatim from the current FMVSS No. 108. Paragraph S17 consolidates marking requirements that apply only to headlamps and lists for reference the other sections of the FMVSS No. 108 re-write where marking requirements reside. Paragraph S18 contains requirements for headlamps with replaceable lenses.

4. Incorporations by Reference

FMVSS No. 108 currently incorporates approximately three dozen SAE standards by reference. Under the proposed reorganization of the re-write, the number of SAE standards that would continue to be incorporated by reference is reduced to eight. This reduction would be achieved by including performance requirements and test procedures currently contained in SAE standards into the tables and text of FMVSS No. 108. We believe that this modification would greatly increase the utility of the document and that most interested parties would infrequently, if ever, need to use the SAE standards that continue to be incorporated by reference.

Under the proposed re-write, FMVSS No. 108 would still incorporate the requirements of the following SAE Standards by reference: (1) SAE J588e, *Turn Signal Lamps* (September 1970), (2) SAE J573d, *Lamp Bulbs and Sealed Units* (December 1968), (3) SAE J577, *Vibration Test Machine* (April 1964), (4) SAE J823b, *Flasher Test Equipment* (April 1968), (5) SAE J602, *Headlamp Aiming Device for Mechanically Aimable Sealed Beam Headlamp Units* (August 1963), (6) SAE J602, *Headlamp Aiming Device for Mechanically Aimable Sealed Beam Headlamp Units* (October 1980), (7) SAE J2009, *Discharge Forward Lighting Systems* (February 1993), and (8) SAE J1050, *Describing and Measuring the Driver's Field of View.*

C. Effective Date

As previously discussed, the proposed amendments set forth in this notice would not make substantive changes to the existing standard. Instead, we are proposing to amend and reorganize the regulatory text of FMVSS No. 108 so that it simplifies the presentation of the standard's requirements for lamps, reflective devices, and associated equipment and reflects the agency's interpretation of the existing requirements. We believe vehicle manufacturers and lighting manufacturers would not have to make any changes to their respective products or production processes if this proposal were made final; instead, the proposed amendments should reduce the burden of certifying to Standard No. 108 for regulated parties. Accordingly, we are proposing to make the proposed revisions effective 180 days after publication of the final rule. Voluntary early compliance with the reorganized standard would be permitted immediately, although the substantive requirements are identical under both versions.

IV. Benefits and Costs

Because this proposal only reorganizes the existing requirements of the standard, we do not anticipate that there would be any costs or benefits associated with this rulemaking action to implement an administrative re-write of FMVSS No. 108, other than the benefits associated with a clearer, easier-to-read standard. Accordingly, the agency did not conduct a separate economic analysis for this rulemaking.

V. Public Participation

How Can I Influence NHTSA's Thinking on This Notice?

In developing this notice, NHTSA has sought to address the concerns of all stakeholders. Your comments will help us determine the final form for the standard, pursuant to the FMVSS No. 108 re-write. We invite you to provide different views about the issues presented, specific interpretations that have not been included in the re-write that you think should be (including applicable proposed regulatory text), how this notice may affect you, or other relevant information. We welcome your views on all aspects of this notice. Your comments will be most effective if you follow the suggestions below:

- Explain your views and reasoning as clearly as possible.
- Provide empirical evidence, wherever possible, to support your views.
- If you estimate potential costs, explain how you arrived at that estimate.
- Provide specific examples to illustrate your concerns.
- Offer specific alternatives, including proposed regulatory text.
- Reference specific sections of the notice in your comments, such as the units or page numbers of the preamble, or the regulatory sections.
- Be sure to include the name, date, and docket number of the proceeding as part of your comments.

How Do I Prepare and Submit Comments?

Your comments must be written and in English. To ensure that your comments are correctly filed in the Docket, please include the docket number of this document in your comments.

Your comments must not be more than 15 pages long. (49 CFR 553.21) We established this limit to encourage you to write your primary comments in a concise fashion. However, you may attach necessary additional documents to your comments. There is no limit on the length of the attachments.

Please submit two copies of your comments, including the attachments, to Docket Management at the address given above under **ADDRESSES.**

You may also submit your comments to the docket electronically by logging onto the Dockets Management System Web site at *http://dms.dot.gov.* Click on ''Help & Information'' or ''Help/Info'' to obtain instructions for filing your document electronically.

How Can I Be Sure That My Comments Were Received?

If you wish Docket Management to notify you upon its receipt of your comments, enclose a self-addressed, stamped postcard in the envelope containing your comments. Upon receiving your comments, Docket Management will return the postcard by mail. Each electronic filer will receive electronic confirmation that his or her submission has been received.

How Do I Submit Confidential Business Information?

If you wish to submit any information under a claim of confidentiality, you should submit three copies of your complete submission, including the information you claim to be confidential business information, to the Chief Counsel, NHTSA, at the address given above under **FOR FURTHER INFORMATION CONTACT**. In addition, you should submit two copies, from which you have deleted the claimed confidential business information, to Docket Management at the address given above under **ADDRESSES.** When you send a comment containing information claimed to be confidential business information, you should include a cover letter delineating that information, as specified in our confidential business information regulation. (49 CFR Part 512.)

Will the Agency Consider Late Comments?

We will consider all comments that Docket Management receives before the close of business on the comment closing date indicated above under **DATES**. To the extent possible, we will also consider comments that Docket Management receives after that date. If Docket Management receives a comment too late for us to consider it in developing a final rule (assuming that one is issued), we will consider that comment as an informal suggestion for future rulemaking action.

How Can I Read the Comments Submitted by Other People?

You may read the comments received by Docket Management at the address given above under **ADDRESSES.** The hours of the Docket are indicated above in the same location.

You may also review filed public comments on the Internet. To read the comments on the Internet, take the following steps:

1. Go to the Docket Management System (DMS) Web page of the Department of Transportation (*http://dms.dot.gov/*).
2. On that page, click on ''search.''
3. On the next page (*http://dms.dot.gov/search/*), type in the four-digit docket number shown at the beginning of this document. (Example: If the docket number were ''NHTSA–1998–1234,'' you would type ''1234.'') After typing the docket number, click on ''search.''
4. On the next page, which contains docket summary information for the docket you selected, click on the desired comments. You may download the comments. Although the comments are imaged documents, instead of word processing documents, the ''pdf'' versions of the documents are word searchable.

Please note that even after the comment closing date, we will continue to file relevant information in the Docket as it becomes available. Further, some people may submit late comments. Accordingly, we recommend that you periodically check the Docket for new material.

Data Quality Act Statement

Pursuant to the Data Quality Act, in order for substantive data submitted by third parties to be relied upon and used by the agency, it must also meet the information quality standards set forth in the DOT Data Quality Act guidelines. Accordingly, members of the public should consult the guidelines in preparing information submissions to the agency. DOT's guidelines may be accessed at *http://dmses.dot.gov/submit/DataQualityGuidelines.pdf*.

VI. Rulemaking Analyses and Notices

A. Vehicle Safety Act

Under 49 U.S.C. Chapter 301, *Motor Vehicle Safety* (49 U.S.C. 30101 *et seq.*), the Secretary of Transportation is responsible for prescribing motor vehicle safety standards that are practicable, meet the need for motor vehicle safety, and are stated in objective terms.[11] These motor vehicle safety standards set a minimum standard for motor vehicle or motor vehicle equipment performance.[12] When prescribing such standards, the Secretary must consider all relevant, available motor vehicle safety information.[13] The Secretary also must consider whether a proposed standard is reasonable, practicable, and appropriate for the type of motor vehicle or motor vehicle equipment for which it is prescribed and the extent to which the standard will further the statutory purpose of reducing traffic accidents and associated deaths.[14] The responsibility for promulgation of Federal motor vehicle safety standards has been delegated to NHTSA.[15]

FMVSS No. 108, *Lamps, Reflective Devices, and Associated Equipment*, was originally established in a final rule published in the **Federal Register** on February 3, 1967 (32 FR 2408). The purpose of the standard is to reduce traffic accidents and deaths and injuries resulting from traffic accidents, by providing adequate illumination of the roadway, and by enhancing the conspicuity of motor vehicles on the public roads so that their presence is perceived and their signals understood, both in daylight and in darkness or other conditions of reduced visibility. Since the time of the standard's initial promulgation, the agency has undertaken numerous rulemakings and interpretations related to Standard No. 108, in many cases to deal with the emergence of new lighting technologies. In recent years, concerns have been raised that after nearly four decades of amendment, navigating the requirements of the standard has become increasingly difficult. Therefore, the agency is proposing an administrative re-write of Standard No. 108 in order to improve its structure and clarity, without changing any of its existing substantive requirements. In preparing this proposed rule, the agency carefully considered the statutory requirements of 49 U.S.C. Chapter 301.

First, this proposal reflects the agency's careful consideration and analysis of all existing regulatory provision of FMVSS No. 108, as well as salient letters of interpretation related to that standard. In developing the substantive provisions of the standard over the years, the agency considered all relevant, available motor vehicle safety information, including available research, testing results, and other information related to various technologies. This proposed administrative re-write does not change any of these existing provisions or the basis therefore.

Second, to ensure that the requirements of FMVSS No. 108 are practicable (as well as consistent with our safety objectives), the agency evaluated the cost, availability, and suitability of the standard's provisions, both when initially adopted and during subsequent amendments. As noted above, the changes resulting from this proposal are administrative in nature and would not impact the costs and benefits of the standard. In sum, we believe that this proposal is practicable and would maintain the benefits of Standard No. 108.

Third, the proposed regulatory text following this preamble is stated in objective terms in order to specify precisely what performance is required and how performance will be tested to ensure compliance with the standard. In certain cases, the proposal would modify the language of the standard to improve clarity or to incorporate existing interpretations, again without changing the substance of the existing requirements.

Fourth, we believe that this proposed rule would meet the need for motor vehicle safety by clarifying the safety standard, thereby making it easier for regulated parties to comply with all applicable requirements.

Finally, we believe that this proposal is reasonable and appropriate for motor vehicles subject to the applicable requirements. As discussed elsewhere in this notice, the modifications to the standard resulting from this proposal would be administrative in nature. It does not affect the substance of the requirements or the bases for those requirements, as articulated in earlier rulemakings. Accordingly, we believe that this proposal would be appropriate for covered vehicles that are or would become subject to these provisions of FMVSS No. 108 because it furthers the agency's objective of preventing crash-related deaths and serious injuries by ensuring adequate illumination of roadways and enhanced conspicuity of motor vehicles.

B. Executive Order 12866 and DOT Regulatory Policies and Procedures

Executive Order 12866, ''Regulatory Planning and Review'' (58 FR 51735, October 4, 1993), provides for making determinations whether a regulatory action is ''significant'' and therefore subject to OMB review and to the requirements of the Executive Order. The Order defines a ''significant

[11] 49 U.S.C. 30111(a).

[12] 49 U.S.C. 30102(a)(9).

[13] 49 U.S.C. 30111(b).

[14] *Id.*

[15] 49 U.S.C. 105 and 322; delegation of authority at 49 CFR 1.50.

regulatory action'' as one that is likely to result in a rule that may:

(1) Have an annual effect on the economy of $100 million or more or adversely affect in a material way the economy, a sector of the economy, productivity, competition, jobs, the environment, public health or safety, or State, local, or Tribal governments or communities;

(2) Create a serious inconsistency or otherwise interfere with an action taken or planned by another agency;

(3) Materially alter the budgetary impact of entitlements, grants, user fees, or loan programs or the rights and obligations of recipients thereof; or

(4) Raise novel legal or policy issues arising out of legal mandates, the President's priorities, or the principles set forth in the Executive Order.

This rulemaking document was not reviewed by the Office of Management and Budget under Executive Order 12866. The rule is not considered to be significant within the meaning of E.O. 12866 or the Department of Transportation's Regulatory Policies and Procedures (44 FR 11034 (Feb. 26, 1979)). As stated above in Section IV, *Benefits and Costs,* this proposal is not expected to require parties subject to the requirements of the safety standard to alter their existing practices for certifying compliance with Standard No. 108 or to increase costs of compliance, because the proposal would only reorganize and clarify existing requirements. Accordingly, the agency has not prepared any supplemental economic analysis to accompany this rulemaking document.

C. Regulatory Flexibility Act

Pursuant to the Regulatory Flexibility Act (5 U.S.C. 601 *et seq.*, as amended by the Small Business Regulatory Enforcement Fairness Act (SBREFA) of 1996), whenever an agency is required to publish a notice of rulemaking for any proposed or final rule, it must prepare and make available for public comment a regulatory flexibility analysis that describes the effect of the rule on small entities (*i.e.*, small businesses, small organizations, and small governmental jurisdictions). The Small Business Administration's regulations at 13 CFR Part 121 define a small business, in part, as a business entity ''which operates primarily within the United States.'' (13 CFR 121.105(a)). No regulatory flexibility analysis is required if the head of an agency certifies the rule will not have a significant economic impact on a substantial number of small entities. SBREFA amended the Regulatory Flexibility Act to require Federal agencies to provide a statement of the factual basis for certifying that a rule will not have a significant economic impact on a substantial number of small entities.

NHTSA has considered the effects of this proposed rule under the Regulatory Flexibility Act. I certify that this proposed rule would not have a significant economic impact on a substantial number of small entities. The rationale for this certification is that the present proposal does not make any substantive changes to this safety standard, so affected parties would be able to continue current practices without change. Accordingly, we do not anticipate that this proposal would have a significant economic impact on a substantial number of small entities.

D. Executive Order 13132 (Federalism)

Executive Order 13132, ''Federalism'' (64 FR 43255, August 10, 1999), requires NHTSA to develop an accountable process to ensure ''meaningful and timely input by State and local officials in the development of regulatory policies that have federalism implications.'' ''Policies that have federalism implications'' are defined in the Executive Order to include regulations that have ''substantial direct effects on the States, on the relationship between the national government and the States, or on the distribution of power and responsibilities among the various levels of government.'' Under Executive Order 13132, the agency may not issue a regulation with Federalism implications, that imposes substantial direct compliance costs, and that is not required by statute, unless the Federal government provides the funds necessary to pay the direct compliance costs incurred by State and local governments, the agency consults with State and local governments, or the agency consults with State and local officials early in the process of developing the proposed regulation. NHTSA also may not issue a regulation with Federalism implications and that preempts a State law unless the agency consults with State and local officials early in the process of developing the regulation.

NHTSA has analyzed this proposed rule in accordance with the principles and criteria set forth in Executive Order 13132, and the agency determined that the rule would not have sufficient Federalism implications to warrant consultations with State and local officials or the preparation of a Federalism summary impact statement. This proposed rule is not expected to have any substantial effects on the States, or on the current distribution of power and responsibilities among the various local officials.

E. Executive Order 12988 (Civil Justice Reform)

Pursuant to Executive Order 12988, ''Civil Justice Reform'' (61 FR 4729, February 7, 1996), the agency has considered whether this rulemaking would have any retroactive effect. This proposed rule would not have any retroactive effect. Under 49 U.S.C. 30103, whenever a Federal motor vehicle safety standard is in effect, a State may not adopt or maintain a safety standard applicable to the same aspect of performance which is not identical to the Federal standard, except to the extent that the State requirement imposes a higher level of performance and applies only to vehicles procured for the State's use. 49 U.S.C. 30161 sets forth a procedure for judicial review of final rules establishing, amending, or revoking Federal motor vehicle safety standards. That section does not require submission of a petition for reconsideration or other administrative proceedings before parties may file a suit in court.

F. Executive Order 13045 (Protection of Children from Environmental Health and Safety Risks)

Executive Order 13045, ''Protection of Children from Environmental Health and Safety Risks'' (62 FR 19855, April 23, 1997), applies to any rule that: (1) Is determined to be ''economically significant'' as defined under Executive Order 12866, and (2) concerns an environmental, health, or safety risk that the agency has reason to believe may have a disproportionate effect on children. If the regulatory action meets both criteria, the agency must evaluate the environmental health or safety effects of the planned rule on children, and explain why the planned regulation is preferable to other potentially effective and reasonably feasible alternatives considered by the agency.

This proposed rule is not subject to E.O. 13045 because it is not an economically significant regulatory action under Executive Order 12866, and because it does not involve decisions based upon health and safety risks that disproportionately affect children.

G. Paperwork Reduction Act

Under the Paperwork Reduction Act of 1995 (PRA), a person is not required to respond to a collection of information by a Federal agency unless the collection displays a valid OMB control number. This proposed rule does not contain any collection of information

requirements requiring review under the PRA.

H. National Technology Transfer and Advancement Act

Section 12(d) of the National Technology Transfer and Advancement Act of 1995 (NTTAA), Public Law 104–113, (15 U.S.C. 272) directs the agency to evaluate and use voluntary consensus standards in its regulatory activities unless doing so would be inconsistent with applicable law or is otherwise impractical. Voluntary consensus standards are technical standards (*e.g.*, materials specifications, test methods, sampling procedures, and business practices) that are developed or adopted by voluntary consensus standards bodies, such as the Society of Automotive Engineers. The NTTAA directs us to provide Congress (through OMB) with explanations when we decide not to use available and applicable voluntary consensus standards. The NTTAA does not apply to symbols.

This proposal would not adopt or reference any new industry or consensus standards that were not already present in Standard No. 108. The agency's statements regarding the rationale for the use (or non-use) of third-party standards, as presented in prior rulemakings, remain unchanged.

I. Unfunded Mandates Reform Act

Section 202 of the Unfunded Mandates Reform Act of 1995 (UMRA) requires federal agencies to prepare a written assessment of the costs, benefits, and other effects of proposed or final rules that include a Federal mandate likely to result in the expenditure by State, local, or tribal governments, in the aggregate, or by the private sector, of more than $100 million annually (adjusted for inflation with base year of 1995 (so currently about $112 million in 2001 dollars)). Before promulgating a NHTSA rule for which a written statement is needed, section 205 of the UMRA generally requires the agency to identify and consider a reasonable number of regulatory alternatives and adopt the least costly, most cost-effective, or least burdensome alternative that achieves the objectives of the rule. The provisions of section 205 do not apply when they are inconsistent with applicable law. Moreover, section 205 allows the agency to adopt an alternative other than the least costly, most cost-effective, or least burdensome alternative if the agency publishes with the final rule an explanation of why that alternative was not adopted.

This proposed rule is not anticipated to result in the expenditure by State, local, or tribal governments, in the aggregate, or by the private sector in excess of $112 million annually. Instead, the cost impact of this administrative re-write of Standard No. 108 is expected to be $0. Therefore, the agency has not prepared an economic assessment pursuant to the Unfunded Mandates Reform Act.

J. National Environmental Policy Act

NHTSA has analyzed this rulemaking action for the purposes of the National Environmental Policy Act. The agency has determined that implementation of this action would not have any significant impact on the quality of the human environment.

K. Regulatory Identifier Number (RIN)

The Department of Transportation assigns a regulation identifier number (RIN) to each regulatory action listed in the Unified Agenda of Federal Regulations. The Regulatory Information Service Center publishes the Unified Agenda in April and October of each year. You may use the RIN contained in the heading at the beginning of this document to find this action in the Unified Agenda.

L. Privacy Act

Please note that anyone is able to search the electronic form of all comments received into any of our dockets by the name of the individual submitting the comment (or signing the comment, if submitted on behalf of an association, business, labor union, etc.). You may review DOT's complete Privacy Act Statement in the **Federal Register** published on April 11, 2000 (Volume 65, Number 70; Pages 19477–78), or you may visit *http://dms.dot.gov*.

List of Subjects in 49 CFR Part 571

Motor vehicle safety, Reporting and recordkeeping requirements, Tires.

In consideration of the foregoing, Part 571 is proposed to be amended as follows:

PART 571—FEDERAL MOTOR VEHICLE SAFETY STANDARDS

1. The authority citation for part 571 continues to read as follows:

Authority: 49 U.S.C. 322, 30111, 30115, 30117, and 30166; delegation of authority at 49 CFR 1.50.

2. Section 571.108 is revised to read as follows:

§ 571.108 Standard No. 108; Lamps, reflective devices, and associated equipment.

S1 *Scope*. This standard specifies requirements for original and replacement lamps, reflective devices, and associated equipment.

S2 *Purpose*. The purpose of this standard is to reduce traffic accidents and deaths and injuries resulting from traffic accidents, by providing adequate illumination of the roadway, and by enhancing the conspicuity of motor vehicles on the public roads so that their presence is perceived and their signals understood, both in daylight and in darkness or other conditions of reduced visibility.

S3 *Application*. This standard applies to:

S3.1 Passenger cars, multipurpose passenger vehicles, trucks, buses, trailers (except pole trailers and trailer converter dollies), and motorcycles;

S3.2 Retroreflective sheeting and reflex reflectors manufactured to conform to S7.12 of this standard; and

S3.3 Lamps, reflective devices, and associated equipment for replacement of like equipment on vehicles to which this standard applies.

S4 *Definitions*. Definitions of additional terms used in this standard may be found at 49 CFR 571.3.

Aiming plane means a plane defined by the surface of the three aiming pads on the lens.

Aiming reference plane means a plane which is perpendicular to the longitudinal axis of the vehicle and tangent to the forwardmost aiming pad on the headlamp.

Aiming screws are the horizontal and vertical adjusting screws with self-locking features used to aim and retain a headlamp unit in the proper position.

Axis of reference means the characteristic axis of the lamp for use as the direction of reference (H = 0°, V = 0°) for angles of field for photometric measurements and for installing the lamp on the vehicle.

Backup lamp means a lamp or lamps which illuminate the road to the rear of a vehicle and provide a warning signal to pedestrians and other drivers when the vehicle is backing up or is about to back up.

Beam contributor means an indivisible optical assembly including a lens, reflector, and light source, that is part of an integral beam headlighting system and contributes only a portion of a headlamp beam.

Cargo lamp is a lamp that is mounted on a multipurpose passenger vehicle, truck, or bus for the purpose of providing illumination to load or unload cargo.

Clearance lamps are lamps which show to the front or rear of the vehicle, mounted on the permanent structure of the vehicle as near as practicable to the upper left and right extreme edges to indicate the overall width and height of the vehicle.

Coated materials means a material which has a coating applied to the surface of the finished sample to impart some protective properties. Coating identification means a mark of the manufacturer's name, formulation designation number, and recommendations for application.

Color. Fundamental definitions of color are expressed by Chromaticity Coordinates according to the International Commission on Illumination (C.I.E.) 1931 Standard Colorimetric System.

Color bleeding means the migration of color out of a plastic part onto the surrounding surface.

Combination clearance and side marker lamps are single lamps which simultaneously fulfill the requirements of clearance and side marker lamps.

Cracking means a separation of adjacent sections of a plastic material with penetration into the specimen.

Crazing means a network of apparent fine cracks on or beneath the surface of materials.

Cutoff means a generally horizontal, visual/optical aiming cue in the lower beam that marks a separation between areas of higher and lower luminance.

Daytime running lamps (DRL's) are steady burning lamps that are used to improve the conspicuity of a vehicle from the front and front sides when the regular headlamps are not required for driving.

Delamination means a separation of the layers of a material including coatings.

Design voltage means the voltage used for design purposes.

Direct reading indicator means a device that is mounted in its entirety on a headlamp or headlamp aiming or headlamp mounting equipment, is part of a VHAD, and provides information about headlamp aim in an analog or digital format.

Effective light-emitting surface means that portion of a lamp that directs light to the photometric test pattern, and does not include transparent lenses, mounting hole bosses, reflex reflector area, beads or rims that may glow or produce small areas of increased intensity as a result of uncontrolled light from an area of ½° radius around a test point.

Effective projected luminous lens area means the area of the orthogonal projection of the effective light-emitting surface of a lamp on a plane perpendicular to a defined direction relative to the axis of reference. Unless otherwise specified, the direction is coincident with the axis of reference. The term *functional lighted lens area* in any SAE Standard or Recommended Practice incorporated by reference or by subreference in this standard, has the same meaning as *effective projected luminous lens area*.

Exposed means material used in lenses or optical devices exposed to direct sunlight as installed on the vehicle.

Filament means that part of the light source or light emitting element(s), such as a resistive element, the excited portion of a specific mixture of gases under pressure, or any part of other energy conversion sources, that generates radiant energy which can be seen.

Flash means a cycle of activation and deactivation of a lamp by automatic means continuing until stopped either automatically or manually.

Fully opened means the position of the headlamp concealment device in which the headlamp is in the design open operating position.

H–V axis means the line from the center of the principal filament of a lamp to the intersection of the horizontal (H) and vertical (V) lines of a photometric test screen.

Haze means the cloudy or turbid appearance of an otherwise transparent specimen caused by light scattered from within the specimen or from its surface.

Headlamp means a lighting device providing an upper and/or a lower beam used for providing illumination forward of the vehicle.

Headlamp concealment device means a device, with its operating system and components, that provides concealment of the headlamp when it is not in use, including a movable headlamp cover and a headlamp that displaces for concealment purposes.

Headlamp mechanical axis means the line formed by the intersection of a horizontal and a vertical plane through the light source parallel to the longitudinal axis of the vehicle. If the mechanical axis of the headlamp is not at the geometric center of the lens, then the location will be indicated by the manufacturer on the headlamp.

Headlamp test fixture means a device designed to support a headlamp or headlamp assembly in the test position specified in the laboratory tests and whose mounting hardware and components are those necessary to operate the headlamp as installed in a motor vehicle.

High-mounted stop lamp means a lamp mounted high and possibly forward of the tail, stop, and rear turn signal lamps intended to give a steady stop warning through intervening vehicles to operators of following vehicles.

Identification lamps are lamps used in groups of three, in a horizontal row, which show to the front or rear or both, having lamp centers spaced not less than [6 in.] 15.2 mm. nor more than [12 in.] 30.4 mm. apart, mounted on the permanent structure as near as practicable to the vertical centerline and the top of the vehicle to identify certain types of vehicles.

Integral beam headlamp means a headlamp (other than a standardized sealed beam headlamp designed to conform to paragraph S9 or a replaceable bulb headlamp designed to conform to paragraph S11) comprising an integral and indivisible optical assembly including lens, reflector, and light source, except that a headlamp conforming to paragraph S14.9 or paragraph S14.10 may have a lens designed to be replaceable.

License plate lamp means a lamp used to illuminate the license plate on the rear of a vehicle.

Lower beam means a beam intended to illuminate the road and its environs ahead of the vehicle when meeting or closely following another vehicle.

Mechanically aimable headlamp means a headlamp having three pads on the lens, forming an aiming plane used for laboratory photometric testing and for adjusting and inspecting the aim of the headlamp when installed on the vehicle.

Material means the type and grade of plastics, composition, and manufacturer's designation number and color.

Motor driven cycle means every motorcycle, including every motor scooter, with a motor which produces not more than 5 horsepower, and every bicycle with motor attached.

Motorcycle or motor driven cycle headlamp means a major lighting device used to produce general illumination ahead of the vehicle.

Mounting ring means the adjustable ring upon which a sealed beam unit is mounted.

Mounting ring (type F sealed beam) means the adjustable ring upon which a sealed beam unit is mounted and which forces the sealed beam unit to seat against the aiming ring when assembled into a sealed beam assembly.

Multiple compartment lamp means a device which gives its indication by two or more separately lighted areas which

are joined by one or more common parts, such as a housing or lens.

Multiple lamp arrangement means an array of two or more separate lamps on each side of the vehicle which operate together to give a signal.

Optically combined means a lamp having a single or two-filament light source or two or more separate light sources that operate in different ways, and has its optically functional lens area wholly or partially common to two or more lamp functions.

Overall width means the nominal design dimension of the widest part of the vehicle, exclusive of signal lamps, marker lamps, outside rearview mirrors, flexible fender extensions, mud flaps, and outside door handles determined with doors and windows closed, and the wheels in the straight-ahead position. Running boards may also be excluded from the determination of overall width if they do not extend beyond the width as determined by the other items excluded by this definition.

Parking lamps are lamps on both the left and right of the vehicle which show to the front and are intended to mark the vehicle when parked or serve as a reserve front position indicating system in the event of headlamp failure.

Protected means material used in inner lenses for optical devices where such lenses are protected from exposure to the sun by an outer lens made of materials meeting the requirements for exposed plastics.

Rated voltage means the nominal circuit or vehicle electrical system voltage classification.

Reflex reflectors are devices used on vehicles to give an indication to approaching drivers using reflected light from the lamps of the approaching vehicle.

Remote reading indicator means a device that is not mounted in its entirety on a headlamp or headlamp aiming or headlamp mounting equipment, but otherwise meets the definition of a direct reading indicator.

Replaceable bulb headlamp means a headlamp comprising a bonded lens and reflector assembly and one or two headlamp replaceable light sources, except that a headlamp conforming to paragraph S14.9 or paragraph S14.10 may have a lens designed to be replaceable.

Replaceable light source means an assembly of a capsule, base, and terminals manufactured as a light source for an upper and/or lower beam of a replaceable bulb headlamp that is designed to conform to the requirements of appendix A or appendix B of 49 CFR part 564, *Replaceable Light Source Information.*

Retaining ring means the clamping ring that holds a sealed beam unit against a mounting ring.

Retaining ring (type F sealed beam) means the clamping ring that holds a sealed beam unit against a mounting ring, and that provides an interface between the unit's aiming/seating pads and the headlamp aimer adapter (locating plate).

School bus signal lamps are alternately flashing lamps mounted horizontally both front and rear, intended to identify a vehicle as a school bus and to inform other users of the highway that such vehicle is stopped on the highway to take on or discharge school children.

Sealed beam headlamp means an integral and indivisible optical assembly including the light source with ''SEALED BEAM'' molded in the lens.

Sealed beam headlamp assembly means a major lighting assembly which includes one or more sealed beam units used to provide general illumination ahead of the vehicle.

Seasoning means the process of energizing the filament of a headlamp at design voltage for a period of time equal to 1% of design life, or other equivalent method.

Semiautomatic headlamp beam switching device is one which provides either automatic or manual control of beam switching at the option of the driver. When the control is automatic the headlamps switch from the upper beam to the lower beam when illuminated by the headlamps on an approaching vehicle and switch back to the upper beam when the road ahead is dark. When the control is manual, the driver may obtain either beam manually regardless of the conditions ahead of the vehicle.

Side marker lamps are lamps which show to the side of the vehicle, mounted on the permanent structure of the vehicle as near as practicable to the front and rear edges to indicate the overall length of the vehicle. Additional lamps may also be mounted at intermediate locations on the sides of the vehicle.

Stop lamps are lamps giving a steady light to the rear of a vehicle to indicate a vehicle is stopping or diminishing speed by braking.

Taillamps are steady burning low intensity lamps used to designate the rear of a vehicle.

Test voltage means the specified voltage and tolerance to be used when conducting a test.

Turn signal flasher means a device which causes a turn signal lamp to flash as long as it is turned on.

Turn signal lamps are the signaling element of a turn signal system which indicates the intention to turn or change direction by giving a flashing light on the side toward which the turn will be made.

Turn signal operating unit means an operating unit that is part of a turn signal system by which the operator of a vehicle causes the signal units to function.

Upper beam means a beam intended primarily for distance illumination and for use when not meeting or closely following other vehicles.

Vehicle headlamp aiming device or VHAD means motor vehicle equipment, installed either on a vehicle or headlamp, which is used for determining the horizontal or vertical aim, or both the vertical and horizontal aim of the headlamp.

Vehicular hazard warning signal flasher means a device which, as long as it is turned on, causes all the required hazard warning lamps to flash.

Vehicular hazard warning signal operating unit means a driver controlled device which causes all turn signal lamps, or other hazard warning lamps, to flash simultaneously to indicate to approaching drivers the presence of a vehicular hazard.

Visually/optically aimable headlamp means a headlamp which is designed to be visually/optically aimable in accordance with the requirements of paragraph S14.10 of this standard.

S5 *References to SAE publications.*

S5.1 Each lamp, reflective device, and item of associated equipment must be designed to conform to the requirements of applicable SAE publications as referenced and subreferenced in this standard. The words ''it is recommended that,'' ''recommendations,'' or ''should be'' appearing in any SAE publication referenced or subreferenced in this standard must be read as setting forth mandatory requirements.

S5.2 A complete list of all SAE publications incorporated by reference in this standard are indexed at 49 CFR 571.5(j).

S6 *Vehicle requirements.*

S6.1 *Required lamps, reflective devices, and associated equipment by vehicle type.*

S6.1.1 *Quantity.* Except as provided in succeeding paragraphs of this standard, each vehicle must be equipped with not less than the number of lamps, reflective devices, and items of associated equipment specified for that vehicle type and size in Table I and Section 6.6, conforming to the requirements of this standard. Multiple license plate lamps and backup lamps

may be used to fulfill photometric requirements for those functions.

S6.1.1.1 *Conspicuity systems.* Each trailer of 2032 mm. or more in overall width, and with a GVWR over 10,000 lbs., except a trailer designed exclusively for living or office use, and each truck tractor must be equipped with retroreflective sheeting, reflex reflectors, or a combination of retroreflective sheeting and reflex reflectors as specified in S7.12 and Table III.

S6.1.1.1.1 A trailer equipped with a conspicuity treatment in conformance with S7.12 need not be equipped with the reflex reflectors required by Table I if the conspicuity material is placed at the locations of the reflex reflectors required by Table I.

S6.1.1.2 *High-mounted stop lamps.* Each multipurpose passenger vehicle, truck, and bus required by this standard to be equipped with a high-mounted stop lamp, whose vertical centerline, when the vehicle is viewed from the rear, is not located on a fixed body panel but separates one or two moveable body sections, such as doors, which lacks sufficient space to install a single high-mounted stop lamp on the centerline above such body sections, must have two high-mounted stop lamps identical in size and shape. The two lamps must be located at the same height, with one vertical edge of each lamp on the vertical edge of the body section nearest the vehicle centerline.

S6.1.1.3 *Truck tractor rear turn signal lamps.* A truck tractor need not be equipped with turn signal lamps mounted on the rear if the turn signal lamps installed at or near the front are of double face construction and are so located so that they meet the requirements for double faced turn signal lamps specified in SAE J588e, Turn Signal Lamps, September 1970.

S6.1.1.4 *Hazard warning lamps.* In all passenger cars, multipurpose passenger vehicles, trucks, and buses, the activation of the vehicular hazard warning signal operating unit must cause to flash simultaneously sufficient turn signal lamps to meet, as a minimum, the turn signal photometric requirements of this standard.

S6.1.2 *Color.* The color in all lamps and reflective devices must be as specified in Table I. The color identified as amber is identical to the color identified as yellow.

S6.1.3 *Mounting location and height.* Each lamp, reflective device, and item of associated equipment must be securely mounted on a fixed body panel of the vehicle, other than glazing, that is not designed to be removed except for repair, within the height limits as specified in Table I, and in a location where it complies with all applicable photometric requirements, effective projected luminous lens area requirements, and visibility requirements with all obstructions considered. When multiple lamp arrangements or multiple compartment rear turn signal lamps, stop lamps, or taillamps are used, with only a portion of the compartments or lamps installed on a rigid part of the vehicle, that portion must meet at least the photometric requirements for the appropriate single compartment lamp.

S6.1.3.1 *Mounting height.* The mounting height of each lamp and reflective device must be measured from the center of the item, as mounted on the vehicle at curb weight, to the road surface.

S6.1.3.2 *High-mounted stop lamp.*

S6.1.3.2.1 A high-mounted stop lamp mounted below the rear window must have no lens portion lower than 153 mm. [6 in.] below the lower edge of the rear window on convertibles, or 77 mm. [3 in.] on other passenger cars.

S6.1.3.2.2 A high-mounted stop lamp mounted inside the vehicle must have means provided to minimize reflections from the light of the lamp upon the rear window glazing that might be visible to the driver when viewed directly, or indirectly in the rearview mirror.

S6.1.4 *License plate lamp.* The license plate lamp or lamps installed on vehicles other than motorcycles and motor driven cycles must be mounted so as to illuminate the license plate without obstruction from any designed feature unless the lamp or lamps is (are) designed to comply with all the photometric requirements with these obstructions considered.

S6.1.5 *Activation.* Each lamp must be activated as specified, in the combinations specified, and in response to the inputs specified in Table I and Table II.

S6.1.5.1 *Stop lamp activation.* Each stop lamp may also be activated when the vehicle is slowed by a device designed to retard the motion of the vehicle.

S6.2 *Impairment.*

S6.2.1 No additional lamp, reflective device, or other motor vehicle equipment is permitted to be installed that impairs the effectiveness of lighting equipment required by this standard.

S6.2.2 If any required lamp or reflective device is obstructed by motor vehicle equipment (e.g., mirrors, snow plows, wrecker booms, backhoes, winches, etc.) including dealer installed equipment, and cannot meet the applicable photometry and visibility requirements, the vehicle must be equipped with an additional lamp or device of the same type which meet all applicable requirements of this standard, including photometry and visibility.

S6.2.3 Each auxiliary lamp that performs the function of a required lamp must meet the color, maximum photometric intensity, and activation requirements of the required lamp.

S6.2.4 *Daytime running lamps.* A passenger car, multipurpose passenger vehicle, truck, or bus may be equipped with a pair of daytime running lamps (DRL) as specified in Table I and S7.11 of this standard. DRLs may be combined with any lamps required by this standard except parking lamps and any lamps not required by this standard except fog lamps.

S6.2.5 *Auxiliary identification lamps.* Each auxiliary identification lamp must be located at least twice the distance from any required identification lamp as the distance between two adjacent required identification lamps.

S6.3 *Equipment combinations.* Two or more lamps, reflective devices, or items of associated equipment may be combined if the requirements for each lamp, reflective device, and item of associated equipment are met with the following exceptions.

S6.3.1 No high-mounted stop lamp is permitted to be combined with any other lamp or reflective device, other than with a cargo lamp.

S6.3.2 No high-mounted stop lamp is permitted to be combined optically with any cargo lamp.

S6.3.3 No clearance lamp is permitted to be optically combined with any taillamp.

S6.4 *Visibility and aiming.*

S6.4.1 *Effective projected luminous lens area requirements.* Each turn signal lamp, stop lamp, high-mounted stop lamp, and school bus signal lamp must meet the appropriate effective projected luminous lens area requirement specified in Table IV.

S6.4.2 *Visibility.* Each backup lamp, single or combination of dual high-mounted stop lamp(s), and school bus signal lamp must meet the appropriate visibility requirement specified in Table V.

S6.4.3 *Visibility options.* A manufacturer must certify compliance of each lamp to one of the following visibility requirement options, and it may not thereafter choose a different option for that vehicle.

(a) *Lens area option.* When a vehicle is equipped with any lamp listed in Table V, each such lamp must provide not less than 1250 sq. mm. of unobstructed effective projected luminous lens area in any direction

throughout the pattern defined by the corner points specified in Table V for each such lamp; or

(b) *Luminous intensity option.* When a vehicle is equipped with any lamp listed in Table V, each such lamp must provide a luminous intensity of not less than that specified in Table V in any direction throughout the pattern defined by the corner points specified in Table V for each such lamp when measured in accordance with the photometry test requirements of this standard.

S6.4.4 *SAE visibility alternative.* As an alternative to S6.4.3 , each passenger car and motorcycle, and each multipurpose passenger vehicle, truck, trailer, and bus that is of less than 2032 mm. overall width, that are manufactured on or before September 1, 2011, and each multipurpose passenger vehicle, truck, trailer, and bus that is of 2032 mm. or more overall width, that are manufactured on or before September 1, 2014, must have each lamp located so that it meets the visibility requirements specified in Table V.

S6.4.5 *Low-mounted lamps.* For signal lamps and reflective devices mounted less than 750 mm. above the road surface, as measured to the lamp axis of reference, the vertical test point angles located below the horizontal plane subject to photometric and visibility requirements of this standard may be reduced to 5° down.

S6.4.6 *School bus signal lamp aiming.* Each school bus signal lamp must be mounted on the vehicle with their aiming plane vertical and normal to the vehicle longitudinal axis. Aim tolerance must be no more than 5 in. vertically and 10 in. horizontally at 25 ft. from the lamp. If the lamps are aimed or inspected by use of the SAE J602, *Headlamp Aiming Device for Mechanically Aimable Sealed Beam Headlamp Units* (August 1963), aimer the graduation settings for aim must be 2° D and 0° sideways for aiming and the limits must be 3° U to 7° D and from 10° R to 10° L for inspection.

S6.5 *Marking.*

S6.5.1 *DOT marking.* The lens of each original equipment and replacement headlamp, and of each original equipment and replacement beam contributor, and each replacement headlamp lens for an integral beam or replaceable bulb headlamp, must be marked with the symbol ''DOT'' either horizontally or vertically to indicate certification under the standard.

S6.5.1.1 DOT marking requirements for conspicuity materials are specified in S7.12 of this standard.

S6.5.1.2 Each original equipment or replacement lamp or reflective device specified in Table I, except for a headlamp, or item of associated equipment specified in Section 6.6 may be marked with the symbol ''DOT'' which constitutes a certification that it conforms to the requirements of this standard.

S6.5.2 *DRL marking.* Each original equipment and replacement lamp used as a daytime running lamp (DRL), unless optically combined with a headlamp, must be permanently marked ''DRL'' in letters not less than 3 mm. high.

S6.6 *Associated equipment.* All vehicles covered by this standard (except trailers) must be equipped with a turn signal operating unit, a turn signal flasher, a turn signal pilot indicator, a headlamp beam switching device, and an upper beam headlamp indicator meeting the requirements of this section and as specified in Table III. All vehicles covered by this standard (except trailers and motorcycles) must be equipped with a vehicular hazard warning operating unit, a vehicular hazard warning signal flasher, and a vehicular hazard warning signal pilot indicator meeting the requirements of this section and as specified in Table III.

S6.6.1 *License plate holder.* Each license plate holder must be designed and constructed to provide a substantial plane surface on which to mount the plate. The plane of the license plate mounting surface and the plane on which the vehicle stands must be perpendicular within ± 15°.

S6.7 *Replacement equipment.*

S6.7.1 *General requirements.*

S6.7.1.1 Each replacement lamp, reflective device, or item of associated equipment, including a combination lamp, must:

(a) Be designed to conform to meet all requirements specified in this standard for that type of lamp, reflective device, or other item of equipment (in the case of a combination lamp, it must meet these requirements for each function); and

(b) Include all of the functions of the lamp, reflective device, or item of associated equipment, including a combination lamp, it is designed to replace or is capable of replacing (other than functions not required by this standard).

S6.7.1.2 Each replacement lamp, reflective device, or item of associated equipment, including a combination lamp, which is designed or recommended for particular vehicle models must be designed so that it does not to take the vehicle out of compliance with this standard when the individual device is installed on the vehicle. Except as provided in S6.7.1.3, the determination of whether a vehicle would be taken out of compliance with this standard when an individual device is installed on the vehicle is made without regard to whether additional devices, including separate lamps or reflective devices sold together with the device, would also be installed.

S6.7.1.3 In the case of a lamp or other device that is used on each side of the vehicle in pairs, the determination (for purposes of S6.7.1.2) of whether a vehicle would be taken out of compliance with this standard when an individual device is installed on the vehicle is made assuming that the other matched paired device would be installed on the other side of the vehicle, whether or not the matched paired devices are sold together. This provision does not limit the responsibilities of manufacturers, distributors, dealers or motor vehicle repair businesses under 49 U.S.C. 30122, *Making safety devices and elements inoperative.*

S6.7.2 *Version of this standard.* The requirements of S6.7.1 must be met, at the option of the manufacturer, using either the current version of this standard or the standard in effect at the time of manufacture of the original equipment being replaced.

S6.8 *Physical tests.*

S.6.8.1 Each lamp, reflective device, and item of conspicuity treatment required or allowed by this standard must meet all applicable physical test requirements specified in Table XXII. Each headlamp must meet all applicable physical test requirements specified in Table XXIII. Each item of associated equipment required by this standard must meet all applicable physical test requirements specified in Table III.

S6.8.2 *Samples for test.* Samples submitted for laboratory test must be new, unused, manufactured from production tooling and assembled by production processes, and representative of the devices as regularly manufactured and marketed. Each must include not only the device but also accessory equipment necessary to operate in its intended manner. Where necessary, a mounting bracket should be provided so that the device may be rigidly bolted in its operating position on the various test equipment. A mounting bracket with a sample headlamp installed must not have a resonant frequency in the 10–55 Hz. range. Dust and photometric tests may be made on a second set of mounted samples to expedite completion of the tests. Color test samples for materials used for reflex reflectors may be either the actual reflector or a disc of the same material, technique of fabrication, and dye formulation as the reflex reflector

having a thickness of twice the distance from the face of the reflector lens to the apexes of the reflecting elements.

S6.8.3 *Laboratory facilities.* The laboratory must be equipped to test the sample in accordance with the requirements of the specific device.

S6.8.4 *Plastic optical materials.* All plastic materials used for optical parts such as lenses and reflectors on lamps or reflective devices required or allowed by this standard must conform to the material test requirements of Table XXII.

S6.8.4.1 All coatings used on optical materials must have added to their formulations an optical brightener, whose presence is detectable by ultraviolet light, to aid in testing for their presence. Other equivalent industry accepted methods may be used as an alternative.

S6.8.5 *Photometric tests.* Each lamp and reflective device required or allowed by this standard must be designed to conform to the stated photometric requirements.

S6.8.5.1 *Photometry measurements for all lamps except license lamps, headlamps, and DRLs.* Photometry measurements are made with the sample lamp mounted in its normal operating position. A school bus signal lamp must be aimed with its aiming plane normal to the photometer axis and may be reaimed for photometry by ±½ ° vertically and ±1 ° horizontally. Photometric measurements are made at a distance between the light source and the point of measurement of at least 1.2 m. for sidemarker lamps, clearance lamps, identification lamps, and parking lamps, and at least 3 m. for all other lamps except license plate lamps and headlamps. When making photometric measurements at specific test points, the luminous intensity values between test points must not be less than the lower of the specified value of the two closest adjacent test points, on a horizontal or vertical line, for minimum values.

S6.8.5.1.1 *Location of test points.* Test point location must comply with the following nomenclature: The line formed by the intersection of a vertical plane through the light source of the lamp and normal to the test screen is designated ''V''. The line formed by the intersection of a horizontal plane through the light source and normal to the test screen is designated ''H''. The point of intersection of these two lines is designated ''H–V''. Other test points on the test screen are measured in terms of angles from the H and V lines. Angles to the right (R) and to the left (L) are regarded as being to the right and left of the V line when the observer stands behind the lamp and looks in the direction of its light beam when it is properly aimed for photometry. Similarly, the upward angles designated as U and the downward angles designated as D, refer to light directed at angles above and below the H line, respectively.

S6.8.5.1.2 *Multiple compartment and multiple lamp photometry.* When compartments of lamps or arrangements of multiple lamps are photometered together, the H–V axis intersects the midpoint between the optical axes. Luminous intensity measurements of multiple compartment lamp or multiple lamp arrangements are made either by;

S6.8.5.1.2.1 Measuring all compartments together, provided that a line from the optical axis of each compartment or lamp to the center of the photometer sensing device does not make an angle more than 0.6 ° with the H–V axis, or

S6.8.5.1.2.2 Measuring each compartment or lamp separately by aligning its optical axis with the photometer and adding the value at each test point.

S6.8.5.1.2.3 Multiple compartment or multiple lamp arrangements installed on multipurpose passenger vehicles, trucks, trailers, or buses 2032 mm or more in overall width must use the method of S6.8.5.1.2.2 only.

S6.8.5.2 *Bulbs.* Except for a lamp having a sealed-in bulb, a lamp must meet the applicable requirements of this standard when tested with a bulb whose filament is positioned within ±.010 in. of the nominal design position specified in SAE J573d, *Lamp Bulbs and Sealed Units,* December 1968, or specified by the bulb manufacturer and operated at the bulb's rated mean spherical candela.

S6.8.5.2.1 Each lamp designed to use a type of bulb that has not been assigned a mean spherical candela rating by its manufacturer and is not listed in SAE J573d, *Lamp Bulbs and Sealed Units,* December 1968, must meet the applicable requirements of this standard when used with any bulb of the type specified by the lamp manufacturer, operated at the bulb's design voltage. A lamp that contains a sealed-in bulb must meet these requirements with the bulb operated at the bulb's design voltage.

S6.8.5.3 *License plate lamp photometry.* Photometry compliance of license plate lamps is determined by measurement of the illumination falling upon test stations located on a test plate.

S6.8.5.3.1 *Illumination surface.* All illumination measurements are made on a rectangular test plate of clean, white blotting paper mounted on the license plate holder in the position normally taken by the license plate. The face of the test plate must be 1.5mm from the face of the license plate holder.

S6.8.5.3.2 *Test stations.* For lamps used on vehicles other than motorcycles and motor driven cycles, the test stations must be located on the face of the test plate as shown in Table XIII for those types of lamps. For lamps used on motorcycles and motor driven cycles, the test stations must be located on the face of the test plate as shown in Table XIII for those types of lamps.

S6.8.5.4 *Reflex reflector photometry.* Each reflex reflector is mounted for photometry with the center of the reflex area at the center of goniometer rotation and at the same horizontal level as the source of illumination. The source of illumination is a lamp with a 50mm. effective diameter and with a filament operating at 2856 °K. The test distance is 30.5 m. [100ft.]. The observation point is located directly above the source of illumination. The H–V axis of reflex reflectors is taken as parallel to the longitudinal axis of the vehicle for rear reflectors and perpendicular to a vertical plane passing through the longitudinal axis of the vehicle for side reflectors. The photodetector has an opening of not more than 13 mm. vertically and 25 mm. horizontally. Reflex reflectors may have any linear or area dimensions but must have no more than 7740 mm. projected area contained within a 254 mm. diameter circle exposed for photometry.

S6.8.5.4.1 *Reflex reflector and retroreflective sheeting photometry measurements.* Photometric measurements of reflex reflectors and retroreflective sheeting must be made at various observation and entrance angles as shown in Table XVI. The observation angle is the angle formed by a line from the observation point to the center of the reflector and a second line from the center of the reflector to the source of illumination. The entrance angle is the angle between the axis of the reflex reflector and a line from the center of the reflector to the source of illumination. The entrance angle is designated left, right, up, and down in accordance with the position of the source of illumination with respect to the axis of the reflex reflector as viewed from behind the reflector. Measurements are made of the luminous intensity which the reflex reflector is projecting toward the observation point and the illumination on the reflex reflector from the source of illumination. The required measurement at each test point as shown in Table XVI is the quotient of the projected luminous intensity divided by the illumination expressed as millicandela per lux or candela per footcandle. The required measurement

for retroreflective sheeting is candela per lux per square meter of area.

S6.8.5.4.1.1 *Reflex reflector photometry measurement adjustments.* Reflex reflectors, which do not have a fixed rotational position on the vehicle, are rotated about their axis through 360° to find the minimum photometric value which must be reported for each test point. If the output falls below the minimum requirement at any test point, the reflector is rotated ±5° about its axis from the angle where the minimum output occurred, and the maximum value within this angle is reported as a tolerance value. Reflex reflectors, which by their design or construction, permit mounting on a vehicle in a fixed rotational position, are tested in this position. A visual locator, such as the word TOP is not considered adequate to establish a fixed rotational position on the vehicle. If uncolored reflections from the front surface interfere with photometric readings at any test point, additional readings are taken 1° above, below, right, and left of the test point, and the lowest of these readings and its location is reported provided the minimum test point requirement for the test point is met.

S6.8.5.5 *Daytime running lamp (DRL) photometry measurements.* Each DRL is tested to the procedure of S6.8.5.6 when a test voltage of 12.8 v. ± 20 mv. is applied to the input terminals of the lamp switch module or voltage-reducing equipment, whichever is closer to the electrical source on the vehicle. The test distance from the lamp to the photometer is not less than 18.3 m. if the lamp is optically combined with a headlamp, or is a separate lamp, and not less than 3 m. if the lamp is optically combined with a lamp, other than a headlamp, that is required by this standard.

S6.8.5.6 *Headlamp photometry measurements.* Photometry measurements at the appropriate test points are made with the sample headlamp mounted in its normal operating position. Photometric measurements are made at a distance between the light source and the photometer sensor of at least 18.3 m.

S6.8.5.6.1 *Seasoning and test voltage.* All sealed beam headlamps, integral beam headlamps, beam contributors, and replaceable light sources are seasoned at design voltage for 1% of its average design life or 10 hours, whichever is less, prior to a photometry test. A headlamp is tested at 12.8 v. ± 20 mv. D.C. as measured at the terminals of the lamp.

S6.8.5.6.2 *Aiming.* Each headlamp is aimed prior to a photometry test in accordance with the procedure appropriate to its aiming system. A ¼° reaim is permitted in any direction at any test point to allow for variations in readings between laboratories for all headlamps except a Type F upper beam unit not equipped with a VHAD.

(a) *Mechanically aimable headlamps using an external aimer.* The headlamp is aimed mechanically with the aiming plane at the design angle(s) to the photometer axis and the mechanical axis of the headlamp on the photometer axis.

(b) *Mechanically aimable headlamps equipped with a VHAD.* The headlamp is aimed mechanically using the VHAD in accordance with the manufacturer's instructions as provided with the vehicle on which the headlamp is intended to be used.

(c) *Visually aimable lower beam headlamps—vertical aim.* A VOL cutoff headlamp must have the location of the cutoff maximum gradient, as determined by the method of this Standard, positioned at 0.4° down from the H–H line. A VOR cutoff headlamp must have the location of the cutoff maximum gradient, as determined by the method of this Standard, positioned at the H–H axis.

(d) *Visually aimable lower beam headlamps—horizontal aim.* There must be no adjustment of horizontal aim unless the headlamp is equipped with a horizontal VHAD. If the headlamp has a VHAD, it must be set to zero.

(e) *Visually aimable upper beam headlamps—vertical aim.* A headlamp whose upper beam is combined with a lower beam must not have its vertical aim changed from that set for the lower beam. A headlamp whose upper beam is not combined with a lower beam must have its maximum beam intensity positioned on the H–H axis.

(f) *Visually aimable upper beam headlamps—horizontal aim.* A headlamp whose upper beam is combined with a lower beam must not have its horizontal aim changed from that set for the lower beam. A headlamp whose upper beam is not combined with a lower beam and has a fixed horizontal aim or has a horizontal VHAD must be mounted in its normal operating position on a goniometer such that the mounting fixture alignment axes are coincident with the goniometer axes and must be energized at 12.8 v. ± 20 mv. There must be no adjustment, shimming, or modification of the horizontal axis of the headlamp or test fixture, unless the headlamp is equipped with a VHAD, in which case the VHAD must be adjusted to zero. A headlamp whose upper beam is not combined with a lower beam and is not equipped with a horizontal VHAD, the horizontal aim must be adjusted so that the maximum beam intensity is positioned on the V–V axis.

(g) *Simultaneous aim Type F sealed beam headlamps and beam contributor integral beam headlamps.* A headlamp system allowed to use simultaneous aim of lower beams and upper beams must be aimed mechanically for lower beam photometry by centering the lower beam unit or the geometric center of all lower beam contributors on the photometer axis and aligning the aiming plane, aiming reference plane, or other appropriate vertical plane defined by the manufacturer perpendicular to the photometer axis. It must be aimed for upper beam photometry by moving the assembly in a plane parallel to the established lower beam aiming plane until the upper beam unit or the geometric center of all upper beam contributors is centered in the photometric axis.

(h) *Moveable reflector aimed headlamps.* A headlamp aimed by moving the reflector relative to the lens and headlamp housing, or vice versa, must conform to the photometrics applicable to it with the lens at any specified position relative to the reflector. These positions include not less than ±2.5° from the nominal horizontal aim position for the vehicle on which the headlamp is installed, and not less than the full range of vertical pitch of the vehicle on which the headlamp is installed.

(i) *Motorcycle headlamp-upper beam headlamps designed to comply with Table XX.* The upper beam of a multiple beam headlamp designed to comply with the requirements of Table XX must be aimed photoelectrically so that the center of the zone of highest intensity falls 0.4° vertically below the lamp axis and is centered laterally. The center of the zone of highest intensity must be established by the intersection of a horizontal plane passing through the point of maximum intensity, and the vertical plane established by balancing the photometric values at 3°L and 3°R.

(j) *Motorcycle headlamp-lower beam headlamps designed to comply with Table XX.* The beam from a single beam headlamp designed to comply with the requirements of Table XX must be aimed straight ahead with the top of the beam aimed vertically to obtain 2000 cd at H–V.

S6.8.5.6.3 *Positioner.* The goniometer configuration, used to position the sample headlamp when making photometric measurements at specific angular test points, is horizontal rotation over elevation. The vertical axis of the goniometer must correspond to the design position vertical axis of the

sample headlamp which is vertical and perpendicular to the longitudinal axis of the vehicle.

S6.8.5.6.4 *Photometer.* The photometer must be capable of measuring the luminous intensity of the sample headlamp throughout its illumination range. The maximum effective area of the photometric sensor must fit within a circle whose diameter is equal to 0.009 times the actual test distance from the light source of the sample headlamp to the sensor. The sensor effective area is defined as the actual area of intercepted light striking the detector surface of the photometer. Sensor systems incorporating lens(es) that change the diameter of the intercepted light beam before it reaches the actual detector surface, the maximum size requirements must apply to the total area of the light actually intercepted by the lens surface. The sensor must be capable of intercepting all direct illumination from the largest illuminated dimension of the sample lamp at the test distance. The color response of the photometer must be corrected to that of the 1931 International Commission on Illumination (C.I.E.) Standard Observer (2°) Photopic Response Curve.

S6.8.5.6.5 *Location of test points.* Test point positions are defined by the positioner. The following nomenclature applies: The letters ''V'' and ''H'' designate the vertical and horizontal planes intersecting both the headlamp light source and the photometer axis. ''H)–V'' designates the zero test point angle at the intersection of the H and V planes. This intersection is parallel to the longitudinal axis of the vehicle. The letters ''U'', ''D'', ''L'', and ''R'', indicating up, down, left and right respectively, designate the angular position from the H and V planes to the photometer as viewed from the headlamp. Horizontal angles designated L and R are defined as the plan view angle between the vertical plane and the projection of the light ray from the headlamp onto the horizontal plane. Vertical angles designated U and D are defined as the true angle between the horizontal plane and the light ray from the headlamp. Test points in the area from 10° U to 90° U must be measured from the normally exposed surface of the lens face.

S6.8.5.6.6 *Beam contributor photometry.* In a headlighting system where there is more than one beam contributor providing a lower beam, and/or more than one beam contributor providing an upper beam, each beam contributor must be designed to meet only the applicable photometric performance requirements based upon the following mathematical expression: conforming test point value=2 (test point value)/total number of lower or upper beam contributors for the vehicle, as appropriate.

S7 *Signal lamps, reflective devices, and associated equipment requirements.*

S7.1 *Turn signal lamps.*

S7.1.1 *Front turn signal lamps.*

S7.1.1.1 *Photometry.* Each front turn signal lamp, except for one installed on a motorcycle, must be designed to conform to the base photometry requirements of Table VI, when tested according to the procedure of S6.8.5.1., for the number of lamp compartments or individual lamps and the type of vehicle it is installed on. A front turn signal lamp installed on a motorcycle must be designed to conform to ½ the base photometry requirements otherwise specified in Table VI.

S7.1.1.2 *Spacing to other lamps.* Each front turn signal lamp must also be designed to comply to any additional photometry requirements based on its installed spacing to other lamps as specified by this section. Where more than one spacing relationship exists for a turn signal lamp the requirement must be the one that specifies the highest luminous intensity multiplier of Table VI.

S7.1.1.2.1 *Spacing measurement for non-reflector lamps.* For any front turn signal lamp that does not employ a reflector to meet photometric requirements, the spacing must be measured from the light source of the turn signal lamp to the lighted edge of any low beam headlamp, or any lamp such as an auxiliary low beam headlamp or fog lamp used to supplement the low beam headlamp.

S7.1.1.2.2 *Spacing measurement for lamps with reflectors.* For any front turn signal lamp which employs a reflector, such as a parabolic reflector, to meet photometric requirements, the spacing must be measured from the geometric centroid of the turn signal lamp functional lighted area to the lighted edge of any low beam headlamp, or any lamp such as an auxiliary low beam headlamp or fog lamp used to supplement the low beam headlamp.

S7.1.1.2.3 *Spacing based photometric multipliers.* Where the spacing measurement of S7.1.1.2.1 or S7.1.1.2.2 between a turn signal lamp and the lighted edge of any lamp such as an auxiliary low beam headlamp or fog lamp used to supplement the low beam headlamp is at least 75 mm. but less than 100 mm. the photometric multiplier of Table VI must be 1.5.; where the spacing measurement is at least 60 mm. but less than 75 mm. the photometric multiplier must be 2.0.; where the spacing measurement is less than 60 mm. the photometric multiplier must be 2.5. Where the spacing measurement of S7.1.1.2.1 or S7.1.1.2.2 between a turn signal lamp and the lighted edge of any lower beam headlamp is less than 100 mm. the photometric multiplier must be 2.5.

S7.1.1.3 *Multiple compartments and multiple lamps.* A multiple compartment lamp or multiple lamps may be used to meet the photometric requirements of a front turn signal lamp. If a multiple compartment lamp or multiple lamps are used on a passenger car or on a multipurpose passenger vehicle, truck, bus, or trailer of less than 2032 mm. in overall width, and the distance between adjacent light sources does not exceed 560 mm. for two compartment or lamp arrangements and does not exceed 410 mm. for three compartments or lamp arrangements, then the combination of the compartments or lamps must be used to meet the photometric requirements for the corresponding number of lighted sections specified in Table VI. If the distance between adjacent light sources exceeds the previously stated dimensions, each compartment or lamp must comply with the photometric requirements for one lighted section specified in Table VI.

S7.1.1.3.1 *Lamps installed on vehicles 2032 mm. or more in overall width.* Multiple compartment front turn signal lamps installed on multipurpose passenger vehicles, trucks, and buses 2032 mm. or more in overall width must meet the photometric requirements specified for a single section and not for individual compartments.

S7.1.1.3.2 *Ratio to parking lamps and clearance lamps.* When a parking lamp, or a clearance lamp on a multipurpose passenger vehicle, truck, trailer, or bus of 2032 mm. or more in overall width, is combined with a turn signal lamp, the luminous intensity of the turn signal lamp at each identified test point must not be less than the luminous intensity of the parking lamp or clearance lamp at that same test point times the multiplier shown for that test point in Table VI. If a multiple compartment or multiple lamp arrangement is used on a passenger car or on a multipurpose passenger vehicle, truck, bus, or trailer of less than 2032 mm. in overall width, and the distance between the optical axes for both the parking lamp and turn signal lamp is within 560 mm. for two compartment or lamp arrangements or 410 mm. for three compartments or lamp arrangements, then the ratio must be computed with all compartments or lamps lighted. If a multiple compartment or multiple lamp

arrangement is used and the distance between optical axes for one of the functions exceeds 560 mm. for two compartment or lamp arrangements or 410 mm. for three compartments or lamp arrangements, then the ratio must be computed for only those compartments or lamps where the parking lamp and turn signal lamp are optically combined. Where the clearance lamp is combined with the turn signal lamp, and the maximum luminous intensity of the clearance lamp is located below horizontal and within an area generated by a 1.0° radius around a test point, the ratio for the test point may be computed using the lowest value of the clearance lamp luminous intensity within the generated area.

S7.1.2 *Rear turn signal lamps.*

S7.1.2.1 *Photometry.* Each rear turn signal lamp must be designed to conform to the photometry requirements of Table VII, when tested according to the procedure of S6.8.5.1, for the number of lamp compartments or individual lamps, the type of vehicle it is installed on, and the lamp color as specified by this section. A rear turn signal lamp installed on a motorcycle must be designed to conform to ½ the photometry requirements otherwise specified in Table VII.

S7.1.2.2 *Multiple compartments and multiple lamps.* A multiple compartment lamp or multiple lamps may be used to meet the photometric requirements of a rear turn signal lamp. If a multiple compartment lamp or multiple lamps are used on a passenger car or on a multipurpose passenger vehicle, truck, bus, or trailer of less than 2032 mm. in overall width, and the distance between adjacent light sources does not exceed 560 mm. for two compartment or lamp arrangements and does not exceed 410 mm. for three compartments or lamp arrangements, then the combination of the compartments or lamps must be used to meet the photometric requirements for the corresponding number of lighted sections specified in Table VII. If the distance between adjacent light sources exceeds the previously stated dimensions, each compartment or lamp must comply with the photometric requirements for one lighted section specified in Table VII.

S7.1.2.2.1 *Lamps installed on vehicles 2032 mm. or more in overall width.* Multiple compartment rear turn signal lamps installed on multipurpose passenger vehicles, trucks, and buses 2032 mm. or more in overall width must meet the photometric requirements specified for a single section and not for individual compartments.

S7.1.2.3 *Ratio to taillamps and clearance lamps.* When a taillamp, or a clearance lamp on a multipurpose passenger vehicle, truck, trailer, or bus of 2032 mm. or more in overall width, is combined with a turn signal lamp, the luminous intensity of the turn signal lamp at each identified test point must not be less than the luminous intensity of the taillamp or clearance lamp at that same test point times the multiplier shown for that test point in Table VII. If a multiple compartment or multiple lamp arrangement is used on a passenger car or on a multipurpose passenger vehicle, truck, bus, or trailer of less than 2032 mm. in overall width, and the distance between the optical axes for both the taillamp and turn signal lamp is within 560 mm. for two compartment or lamp arrangements or 410 mm. for three compartments or lamp arrangements, then the ratio must be computed with all compartments or lamps lighted. If a multiple compartment or multiple lamp arrangement is used and the distance between optical axes for one of the functions exceeds 560 mm. for two compartment or lamp arrangements or 410 mm. for three compartments or lamp arrangements, then the ratio must be computed for only those compartments or lamps where the taillamp and turn signal lamp are optically combined. Where the taillamp or clearance lamp is combined with the turn signal lamp, and the maximum luminous intensity of the taillamp or clearance lamp is located below horizontal and within an area generated by a 0.5° radius around a test point for a taillamp on a passenger car or on a multipurpose passenger vehicle, truck, bus, or trailer of less than 2032 mm. in overall width, or by a 1.0° radius around a test point for a taillamp or clearance lamp on a vehicle 2032 mm. or more in overall width, the ratio for the test point may be computed using the lowest value of the taillamp or clearance lamp luminous intensity within the generated area.

S7.1.3 *Physical tests.* Each turn signal lamp must be designed to conform to the performance requirements associated with the vibration test, moisture test, dust test, corrosion test, color test, and plastic optical material test of Table XXII.

S7.1.4 *Combined lamp bulb indexing.* Each turn signal lamp optically combined with a taillamp, or a parking lamp or clearance lamp where installed on a vehicle 2032 mm. or more in overall width, where a two-filament bulb is used must have a bulb with an indexing base and a socket designed so that bulbs with non-indexing bases cannot be used. Removable sockets must have an indexing feature so that they cannot be re-inserted into lamp housings in random positions, unless the lamp will perform its intended function with random light source orientation.

S7.2 *Taillamps.*

S7.2.1 *Photometry.* Each taillamp must be designed to conform to the photometry requirements of Table VIII, when tested according to the procedure of S6.8.5.1, for the number of lamp compartments or individual lamps and the type of vehicle it is installed on.

S7.2.1.1 *Multiple compartments and multiple lamps.* A multiple compartment lamp or multiple lamps may be used to meet the photometric requirements of a taillamp. If a multiple compartment lamp or multiple lamps are used and the distance between the optical axes does not exceed 560 mm. for two compartment or lamp arrangements and does not exceed 410 mm. for three compartments or lamp arrangements, then the combination of the compartments or lamps must be used to meet the photometric requirements for the corresponding number of lighted sections specified in Table VIII. If the distance between optical axes exceeds the previously stated dimensions, each compartment or lamp must comply with the photometric requirements for one lighted section specified in Table VII.

S7.2.1.1.1 *Taillamps installed on vehicles 2032 mm. or more in overall width.* A maximum of two taillamps and/or two compartments per side may be mounted closer together than 560 mm. providing that each compartment and/or lamp meets the single lighted section photometric requirements specified in Table VII. Each lamp and/or compartment utilized in this manner must meet the single lighted section requirements for all functions for which it is designed.

S7.2.2 *Physical tests.* Each taillamp must be designed to conform to the performance requirements associated with the vibration test, moisture test, dust test, corrosion test, color test, and plastic optical material test of Table XXII.

S7.3 *Stop lamps.*

S7.3.1 *Photometry.* Each stop lamp must be designed to conform to the photometry requirements of Table IX, when tested according to the procedure of S6.8.5.1, for the number of lamp compartments or individual lamps and the type of vehicle it is installed on.

S7.3.1.1 *Multiple compartments and multiple lamps.* A multiple compartment lamp or multiple lamps may be used to meet the photometric

requirements of a stop lamp. If a multiple compartment lamp or multiple lamps are used on a passenger car or on a multipurpose passenger vehicle, truck, bus, or trailer of less than 2032 mm. in overall width, and the distance between adjacent light sources does not exceed 560 mm. for two compartment or lamp arrangements and does not exceed 410 mm. for three compartments or lamp arrangements, then the combination of the compartments or lamps must be used to meet the photometric requirements for the corresponding number of lighted sections specified in Table IX. If the distance between adjacent light sources exceeds the previously stated dimensions, each compartment or lamp must comply with the photometric requirements for one lighted section specified in Table IX.

S7.3.1.1.1 *Lamps installed on vehicles 2032 mm. or more in overall width.* Multiple compartment stop lamps installed on multipurpose passenger vehicles, trucks, and buses 2032 mm. or more in overall width must meet the photometric requirements specified for a single section and not for individual compartments.

S7.3.1.2 *Ratio to taillamps.* When a taillamp is combined with a stop lamp, the luminous intensity of the stop lamp at each identified test point must not be less than the luminous intensity of the taillamp at that same test point times the multiplier shown for that test point in Table IX. If a multiple compartment or multiple lamp arrangement is used on a passenger car or on a multipurpose passenger vehicle, truck, bus, or trailer of less than 2032 mm. in overall width, and the distance between the optical axes for both the taillamp and stop lamp is within 560 mm. for two compartment or lamp arrangements or 410 mm. for three compartments or lamp arrangements, then the ratio must be computed with all compartments or lamps lighted. If a multiple compartment or multiple lamp arrangement is used and the distance between optical axes for one of the functions exceeds 560 mm. for two compartment or lamp arrangements or 410 mm. for three compartments or lamp arrangements, then the ratio must be computed for only those compartments or lamps where the taillamp and stop lamp are optically combined. Where the taillamp is combined with the stop lamp, and the maximum luminous intensity is located below horizontal and within an area generated by a 0.5° radius around a test point for a taillamp on a passenger car or on a multipurpose passenger vehicle, truck, bus, or trailer of less than 2032 mm. in overall width, or by a 1.0° radius around a test point for a taillamp on a vehicle 2032 mm. or more in overall width, the ratio for the test point may be computed using the lowest value of the taillamp luminous intensity within the generated area.

S7.3.2 *Physical tests.* Each stop lamp must be designed to conform to the performance requirements associated with the vibration test, moisture test, dust test, corrosion test, color test, and plastic optical material test of Table XXII.

S7.3.3 *Combined lamp bulb indexing.* Each stop lamp optically combined with a taillamp where a two-filament bulb is used must have a bulb with an indexing base and a socket designed so that bulbs with non-indexing bases cannot be used. Removable sockets must have an indexing feature so that they cannot be re-inserted into lamp housings in random positions, unless the lamp will perform its intended function with random light source orientation.

S7.4 *Side marker lamps.*

S7.4.1 *Photometry.* Each side marker lamp must be designed to conform to the photometry requirements of Table X, when tested according to the procedure of S6.8.5.1, for the lamp color as specified by this section.

S7.4.1.1 *Inboard photometry.* For each motor vehicle less than 30 feet in overall length and less than 2032 mm. in overall width, the minimum photometric intensity requirements for a side marker lamp may be met for all inboard test points at a distance of 15 feet from the vehicle and on a vertical plane that is perpendicular to the longitudinal axis of the vehicle and located midway between the front and rear side marker lamps.

S7.4.2 *Physical tests.* Each side marker lamp must be designed to conform to the performance requirements associated with the vibration test, moisture test, dust test, corrosion test, color test, and plastic optical material test of Table XXII.

S7.5 *Clearance and identification lamps.*

S7.5.1 *Photometry.* Each clearance or identification lamp must be designed to conform to the photometry requirements of Table XI, for the applicable lamp color, when tested according to the procedure of S6.8.5.1.

S7.5.2 *Physical tests.* Each clearance or identification lamp must be designed to conform to the performance requirements associated with the vibration test, moisture test, dust test, corrosion test, color test, and plastic optical material test of Table XXII.

S7.6 *Backup lamps.*

S7.6.1 *Photometry.* Each backup lamp must be designed to conform to the photometry requirements of Table XII, when tested according to the procedure of S6.8.5.1, as specified by this section.

S7.6.2 *Color.* A backup lamp may project incidental red, yellow, or white light through reflectors or lenses that are adjacent, close to, or a part of the lamp assembly.

S7.6.3 *Physical tests.* Each backup lamp must be designed to conform to the performance requirements associated with the vibration test, moisture test, dust test, corrosion test, color test, and plastic optical material test of Table XXII.

S7.7 *License plate lamps.*

S7.7.1 *Installation.*

Each license plate lamp installed on a vehicle other than a motorcycle or motor driven cycle must be of such size and design as to provide illumination on all parts of a 150 mm. by 300 mm. test plate. Each license plate lamp installed on a motorcycle or motor driven cycle must be of such size and design as to provide illumination on all parts of a 100 mm. by 175 mm. test plate. The light rays must reach all portions of an imaginary plate of the same size at least 25 mm. ahead of the actual plate measured perpendicular to the plane of the plate.

S7.7.1.1 *Incident light from single lamp.* When a single lamp is used to illuminate the license plate, the lamp and license plate holder must bear such relation to each other that at no point on the plate must the incident light make an angle of less than 8° to the plane of the plate, this angle being measured from the edge of the light emitting surface of the lamp farthest from the surface of the plate.

S7.7.1.2 *Incident light from multiple lamps.* When two or more lamps are used to illuminate the license plate, the minimum 8° incident light angle must apply only to that portion of the plate which the particular lamp is designed to illuminate. The angle must be measured in the same manner as S7.7.1.1.

S7.7.2 *Photometry requirements.* Each license plate lamp must be designed to conform to the photometry requirements of this section when tested according to the procedure of S6.8.5.3. An illumination value of no less than 8 lx [0.75 fc.] must be met at each test station target location shown in Table XIII. The ratio of the average of the two highest illumination values divided by the average of the two lowest illumination values must not exceed 20:1 for vehicles other than motorcycles and motor driven cycles. The ratio of the highest illumination value divided by the average of the two lowest illumination values must not exceed 15:1 for motorcycles and motor driven cycles.

S7.7.3 *Physical tests.* Each license plate lamp must be designed to conform to the performance requirements associated with the vibration test, moisture test, dust test, corrosion test, color test, and plastic optical material test of Table XXII.

S7.8 *Parking lamps.*

S7.8.1 *Photometry.* Each parking lamp must be designed to conform to the photometry requirements of Table XIV, when tested according to the procedure of S6.8.5.1, as specified by this section.

S7.8.2 *Physical tests.* Each parking lamp must be designed to conform to the performance requirements associated with the vibration test, moisture test, dust test, corrosion test, color test, and plastic optical material test of Table XXII.

S7.9 *High-mounted stop lamps.*

S7.9.1 *Accessibility.* Each high-mounted stop lamp must provide access for convenient replacement of bulbs without special tools.

S7.9.2 *Interior mounting.* When any high-mounted stop lamp is mounted inside the vehicle, means must be provided to minimize reflections from the light of the lamp upon the rear window glazing that might be visible to the driver when viewed directly, or indirectly in the rearview mirror.

S7.9.3 *Photometry.* Each high-mounted stop lamp must be designed to conform to the photometry requirements of Table XV, when tested according to the procedure of S6.8.5.1, as specified by this section.

S7.9.4 *Physical tests.* Each high-mounted stop lamp must be designed to conform to the performance requirements associated with the vibration test, moisture test, dust test, corrosion test, color test, and plastic optical material test of Table XXII, except that any high-mounted stop lamp mounted inside the vehicle is not required to meet the requirements of the moisture test, dust test, and corrosion test.

S7.10 *Reflex reflectors.*

S7.10.1 *Photometry.* Each reflex reflector must be designed to conform to the photometry requirements of Table XVI when tested according to the procedure of S6.8.5.4.1. for the lamp color as specified by this section.

S7.10.1.1 *Alternative side reflex reflector.* Reflective material conforming to Federal Specification L–S–300, *Sheeting and Tape, Reflective; Non-exposed Lens, Adhesive Backing* (September 7, 1965), may be used for side reflex reflectors if this material as used on the vehicle, meets the performance requirements of Table XVI.

S7.10.2 *Physical tests.* Each reflex reflector must be designed to conform to the performance requirements associated with the vibration test, moisture test, dust test, corrosion test, color test, and plastic optical material test of Table XXII.

S7.11 *Daytime running lamps (DRLs).*

S7.11.1 *Photometry.* Each DRL must have a luminous intensity not less than 500 cd. at test point H-V, nor more than 3,000 cd. at any location in the beam when tested according to the procedure of S6.8.5.5 as specified by this section, unless it is:

(a) A lower beam headlamp intended to operate as a DRL at full voltage, or a voltage lower than used to operate it as a lower beam; or

(b) An upper beam headlamp intended to operate as a DRL, whose luminous intensity at test point H-V is not more than 7,000 cd., and whose mounting height is not higher than 864 mm.

S7.11.2 *Spacing to turn signal lamps.*

S7.11.2.1 Each DRL optically combined with a turn signal lamp must be automatically deactivated as a DRL when the turn signal lamp or hazard warning lamp is activated, and automatically reactivated as a DRL when the turn signal lamp or hazard warning lamp is deactivated.

S7.11.2.2 Each DRL not optically combined with a turn signal lamp must be located on the vehicle so that the distance from its lighted edge to the optical center of the nearest turn signal lamp is not less than 100 mm. unless:

(a) The luminous intensity of the DRL is not more than 2,600 cd. at any location in the beam and the turn signal lamp meets 2.5 times the base front turn signal photometric requirements: or,

(b) The DRL is optically combined with a lower beam headlamp and the turn signal lamp meets 2.5 times the base front turn signal photometric requirements: or,

(c) The DRL is deactivated when the turn signal or hazard warning signal lamp is activated.

S7.11.3 *Physical tests.* Each DRL must be designed to conform to the performance requirements associated with the color test and plastic optical material test requirements of Table XXII.

S7.12 *Conspicuity systems.* The requirement for conspicuity systems may be met with retroreflective sheeting, conspicuity reflex reflectors, or a combination of retroreflective sheeting and conspicuity reflex reflectors.

S7.12.1 *Retroreflective sheeting.* Retroreflective sheeting must consist of a smooth, flat, transparent exterior film with retroreflective elements embedded or suspended beneath the film so as to form a non-exposed retroreflective optical system. Retroreflective sheeting must meet the requirements, except photometry, of ASTM D 4956–90, *Standard for Retroreflective Sheeting for Traffic Control,* for Type V Sheeting. Sheeting of Grade DOT–C2 of no less than 50 mm. wide, Grade DOT–C3 of no less than 75 mm. wide, or Grade DOT–C4 of no less than 100 mm. wide may be used.

S7.12.1.1 *Certification marking.* The letters DOT–C2, DOT–C3, or DOT–C4, as appropriate, constituting a certification that the retroflective sheeting conforms to the requirements of this standard, must appear at least once on the exposed surface of each white or red segment of retroreflective sheeting, and at least once every 300 mm. on retroreflective sheeting that is white only. The characters must be not less than 3 mm. high, and must be permanently stamped, etched, molded, or printed in indelible ink.

S7.12.1.2 *Photometry.* Each retroreflective sheeting must be designed to conform to the photometry requirements of Table XVI when tested according to the procedure of S6.8.5.4.1 for the color and grade as specified by this section.

S7.12.2 *Conspicuity reflex reflectors.*

S7.12.2.1 *Certification marking.* The exposed surface of each reflex reflector must be marked with the letters DOT-C which constitutes a certification that the reflector conforms to the requirements of this standard. The certification must be not less than 3 mm. high, and must be permanently stamped, etched, molded, or printed in indelible ink.

S7.12.2.2 *Photometry.* Each red conspicuity reflex reflector must be designed to conform to the photometry requirements of Table XVI for a red reflex reflector and for a red conspicuity reflex reflector when tested according to the procedure of S6.8.5.4.1 as specified by this section. Each white conspicuity reflex reflector installed in only a horizontal orientation must be designed to conform to the photometry requirements of Table XVI for a white reflex reflector and for a white horizontal conspicuity reflex reflector when tested according to the procedure of S6.8.5.4.1 as specified by this section. Each white conspicuity reflex reflector installed in a vertical orientation must be designed to conform to the photometry requirements of Table XVI for a white reflex reflector, for a white horizontal conspicuity reflex reflector, and a white vertical conspicuity reflex reflector when tested according to the procedure of S6.8.5.4.1 as specified by this section.

S7.13 *School bus signal lamps.*

S7.13.1 *Photometry.* Each school bus signal lamp must be designed to conform to the photometry requirements of Table XVII, when tested according to the procedure of S6.8.5.1, for the lamp color as specified by this section.

S7.13.2 *Physical test requirements.* Each school bus signal lamp must be designed to conform to the performance requirements associated with the vibration test, moisture test, dust test, corrosion test, color test, and plastic optical material test requirements of Table XXII.

S7.14 *Associated equipment.*

S7.14.1 *Turn signal operating unit.* The turn signal operating unit is that part of the turn signal system by which the operator of a vehicle causes the turn signal lamps to function. The turn signal operating unit installed on passenger cars, multipurpose passenger vehicles, trucks, and buses less than 2032 mm. in overall width must be self-canceling by steering wheel rotation and capable of cancellation by a manually operated control.

S7.14.2 *Turn signal flasher.* The turn signal flasher is that part of the turn signal system which causes the turn signal lamps to flash as long as it is energized. The means of producing the turn signal pilot indicator signal may be incorporated in the flasher. A means of producing an audible signal may be incorporated in the flasher.

S7.14.3 *Turn signal pilot indicator.* Each vehicle equipped with a turn signal operating unit must also have an illuminated pilot indicator to provide a clear and unmistakable indication that the turn signal system is activated. The indicator must consist of one or more lights flashing at the same frequency as the turn signal lamps. The indicator must function satisfactorily under all test conditions imposed on the turn signal flasher in Table III.

S7.14.3.1 *Indicator size and color.* If the indicator is located inside the vehicle, it should emit a green light and have a minimum area of 18 sq. mm. If the indicator is located outside of the vehicle it should emit a yellow light and have a minimum area of 60 sq. mm. The minimum required illuminated area of the indicator must be visible according to the procedures described in SAE J1050, *Describing and Measuring the Driver's Field of View,* with the steering wheel turned to a straight ahead driving position and in the design location for an adjustable wheel and column.

S7.14.3.2 *Turn signal lamp failure.* Failure of one or more turn signal lamps such that the minimum photometric performance specified in Tables VI or VII is not being met must be indicated by the turn signal pilot indicator, except when a variable-load turn signal flasher is used on a multipurpose passenger vehicle, truck, or bus 2032 mm. or more in overall width, on a truck that is capable of accommodating a slide in camper, or on any vehicle equipped to tow trailers.

S7.14.4 *Headlamp beam switching device.* Each vehicle must have a means of switching between lower and upper beams designed and located so that it may be operated conveniently by a simple movement of the driver's hand or foot. The switch should have no dead point and, except as provided by S8.2, the lower and upper beams must not be energized simultaneously except momentarily for temporary signaling purposes or during switching between beams.

S7.14.4.1 *Semi-automatic headlamp beam switching device.* As an alternative to S7.14.4. a vehicle may be equipped with a semi-automatic means of switching between lower and upper beams as specified by this standard and as specified in Table III.

S7.14.4.1.1 *Operating instructions.* Each semi-automatic headlamp switching device must include operating instructions to permit a driver to operate the device correctly including; how to turn the automatic control on and off, how to adjust the provided sensitivity control, and any other specific instructions applicable to the particular device.

S7.14.4.1.2 *Manual override.* The device must include a means convenient to the driver for switching to the opposite beam from the one provided.

S7.14.4.1.3 *Fail-safe operation.* A failure of the automatic control portion of the device must not result in the loss of manual operation of both upper and lower beams.

S7.14.4.1.4 *Automatic dimming indicator.* There must be a convenient means of informing the driver when the device is controlling the headlamps automatically.

S7.14.4.1.5 *Lens accessibility.* The device lens must be accessible for cleaning when the device is installed on a vehicle.

S7.14.4.1.6 *Mounting height.* The center of the device lens must be mounted no less than 24 in. above the road surface.

S7.14.5 *Upper beam headlamp indicator.* Each vehicle must have a means for indicating to the driver when the upper beams of the headlighting system are on.

S7.14.5.1 *Indicator size, location, and color.* The upper beam headlamp indicator must have a minimum area equivalent to that of a 3/16 in. diameter circle, and be plainly visible to drivers of all heights under normal driving conditions when headlamps are required. The indicator color need not be red.

S7.14.6 *Vehicular hazard warning signal operating unit.* The vehicular hazard warning signal operating unit is a driver-controlled device which causes turn signal lamps to flash simultaneously to indicate to approaching drivers the presence of a vehicular hazard. The unit may be an independent device or it may be combined with the turn signal operating unit. If combined with the turn signal operating unit, the actuating motion of the hazard function must differ from the actuating motion of the turn signal function.

S7.14.6.1 *Operating unit switch.* The unit must operate independently of the ignition or equivalent switch. If the actuation of the hazard function requires the operation of more than one switch, a means must be provided for actuating all switches simultaneously by a single driver action.

S7.14.7 *Vehicular hazard warning signal flasher.* The vehicular hazard warning signal flasher is the device which causes the turn signal lamps designated as hazard warning lamps to simultaneously flash as long as it is energized. The means of producing the hazard warning signal pilot indicator signal may be incorporated in the flasher. A means of producing an audible signal may be incorporated in the flasher.

S7.14.8 *Vehicular hazard warning signal pilot indicator.* In vehicles equipped with right hand and left hand turn signal pilot indicators, both pilot indicators and/or a separate pilot indicator must flash simultaneously while the vehicle hazard warning signal operating unit is turned on. In vehicles equipped with a single turn signal pilot indicator, a separate vehicular hazard warning signal pilot indicator must flash and the turn signal pilot indicator may flash while the vehicle hazard warning signal operating unit is turned on. The indicator must function satisfactorily under all test conditions imposed on the hazard warning signal flasher in Table III.

S7.14.8.1 *Indicator size and color.* If a separate vehicular hazard warning pilot indicator is used, it must emit a red color and have a minimum area equivalent to a 0.5 in. diameter circle.

S8 *Headlighting system requirements.*

S8.1 *Headlighting systems.* Each passenger car, multipurpose passenger vehicle, truck and bus must be equipped with a headlighting system conforming to the requirements of Table II and this

standard. Each motorcycle must be equipped with a headlighting system conforming to S13 of this standard or one half of any headlighting system of Table II which provides both a full upper beam and full lower beam.

S8.1.1 *Headlighting system type.* The headlighting system installed on any vehicle covered by this section must be of the two lamp type or the four lamp type.

S8.1.2 *Headlamp category.* The headlighting system installed on any vehicle covered by this section must be of one of the categories listed in Table II.

S8.1.3 *Vertical headlamp arrangement.* Where multiple headlamps with single light sources are installed in a vertical orientation the lower beam must be provided by the uppermost headlamp. Where headlamps with two vertically oriented light sources are installed the lower beam must be provided by the uppermost light source or by all light sources. Where more than one lamp must be used for a motorcycle headlighting system, the lamps must be mounted vertically, with the lower beam as high as practicable.

S8.1.4 *Horizontal headlamp arrangement.* Where multiple headlamps with single light sources are installed in a horizontal orientation the lower beam must be provided by the most outboard headlamp. Where headlamps with two horizontally oriented light sources are installed the lower beam must be provided by the outboard light source or by all light sources.

S8.1.5 *Headlamp adjustments.* The axis of the light beams must be adjustable to the left, right, up, or down from the designed setting, the amount of adjustability to be determined by practical operating conditions and the type of equipment. The adjustments must be conveniently made by one person with tools ordinarily available. When the headlamps are secured, the aim will not be disturbed under ordinary conditions of service.

S8.2 *Simultaneous beam activation.* On any vehicle covered by this section where the headlighting system is designed to conform to the photometric requirements of UB1 of Table XVIII and LB1M or LB1V of Table XIX, the lamps marked ''L'' or ''LF'' may remain permanently activated when the lamps marked ''U'' or ''UF'' are activated. On any vehicle covered by this section where an integral beam headlighting system is designed to conform to the photometric requirements of UB1 of Table XVIII and LB5M or LB4V of Table XIX, the lower beam headlamps must remain permanently activated when the upper beam headlamps are activated. On any vehicle covered by this section where the headlighting system is designed to conform to the photometric requirements of UB2 of Table XVIII and LB2M or LB2V of Table XIX, a lower beam light source may remain permanently activated when an upper beam light source is activated if the lower beam light source contributes to the upper beam compliance of the headlighting system.

S9 *Sealed beam headlamp requirements.* All sealed beam headlamps must be of a type designated in Table II-a. Each sealed beam headlamp must conform to the dimensions and electrical specifications furnished with respect to it pursuant to Appendix C of part 564 of this chapter and Table II-a of this standard. The dimensions applicable to the design of a specific type are those identified with an ''I'' for interchangeability shown on the applicable drawing(s) filed in Docket No. NHTSA 98–3397.

S9.1 *Installation.* A sealed beam headlighting system must consist of the correct number of designated headlamp units shown for the specific system in Table II-a. The units must have their beams activated as shown in Table II-a.

S9.2 *Simultaneous aim.* Type F sealed beam headlamps may be mounted on common or parallel seating and aiming planes to permit simultaneous aiming of both headlamps provided that there must be no provision for adjustment between the common or parallel aiming and seating planes of the two lamps, and when tested with any conforming Type UF and LF headlamps in accordance with S6.8.5.6 the assembly (consisting of the Type UF and LF headlamps, mounting rings, the aiming/seating rings, and aim adjustment mechanism) must be designed to conform to the appropriate photometric requirements.

S9.3 *Photometry.* Each sealed beam headlamp must be designed to conform to the photometry requirements of Table XVIII for upper beam and Table XIX for lower beam as specified in Table II for the specific headlamp unit and aiming method, when tested according to the procedure of S6.8.5.6.

S9.4 *Physical tests.* Each sealed beam headlamp must be designed to conform to the performance requirements associated with Table XXIII and the performance requirements associated with the color test and the plastic optical materials test, if applicable, of Table XXII.

S10 *Integral beam headlamp requirements.* All integral beam headlamps must be of a type designated in Table II-c.

S10.1 *Installation.* An integral beam headlighting system must consist of the correct number of designated headlamp units shown for the specific system in Table II-c. The units must have their beams mechanized as shown in Table II-c. A system must provide in total not more than two upper beams and two lower beams.

S10.2 *Aimability.* An integral beam headlighting system must be aimable in accordance with the requirements of S14. A system that incorporates any headlamp or beam contributor that does not have a VHAD as an integral and indivisible part of the headlamp or beam contributor must be designed so that the appropriate photometric requirements are met when any correctly aimed and photometrically conforming headlamp or beam contributor is removed from its mounting and aiming mechanism, and is replaced without reaim by any conforming headlamp or beam contributor of the same type.

S10.3 *Simultaneous aim.* An integral beam headlighting system consisting of four individual headlamps or beam contributors may have the headlamp units mounted in an assembly to permit simultaneous aiming of the beam(s) contributors, providing that with any complying contributor the assembly complete with all lamps meets the appropriate photometric requirements when tested in accordance with S6.8.5.6.

S10.4 *Markings.* An integral beam headlamp with a single light source providing lower beam must have its lens permanently marked with ''L''. An integral beam headlamp with a single light source providing upper beam must have its lens permanently marked with ''U''.

S10.5 *Additional light sources.* An integral beam headlamp may incorporate replaceable light sources that are used for purposes other than headlighting.

S10.6 *Photometry.* Each integral beam headlamp must be designed to conform to the photometry requirements of Table XVIII for upper beam and Table XIX for lower beam as specified in Table II for the specific headlamp unit and aiming method, when tested according to the procedure of S6.8.5.6.

S10.7 *Physical tests.* Each integral beam headlamp must be designed to conform to the performance requirements associated with Table XXIII and the performance requirements associated with the color test and the plastic optical materials test, if applicable, of Table XXII.

S11 *Replaceable bulb headlamp requirements.* All replaceable bulb headlamps must be of a type designated in Table II-d.

S11.1 *Installation.* A replaceable bulb headlighting system must consist of the correct number of designated headlamp units shown for the specific system in Table II-d. The units must have their beams activated as shown in Table II-d. A system must provide in total not more than two upper beams and two lower beams and must incorporate not more than two replaceable light sources in each headlamp.

S11.2 *Aiming restrictions.* Each replaceable bulb headlamp conforming to the external mechanical aim requirements of S14.8 must have no mechanism that allows adjustment of an individual light source, or if there are two light sources, independent adjustments of each reflector.

S11.3 *Additional light sources.* A replaceable bulb headlamp may incorporate replaceable light sources that are used for purposes other than headlighting.

S11.4 *Replacement equipment.* Each lens reflector unit manufactured as replacement equipment must conform to applicable photometry requirements when any replaceable light source appropriate for such unit is inserted in it.

S11.5 *Markings.* A replaceable bulb headlamp in a four headlamp system providing lower beam must have its lens permanently marked with ''L''. A replaceable bulb headlamp in a four headlamp system providing upper beam must have its lens permanently marked with ''U''.

S11.6 *Photometry.* Each replaceable bulb headlamp must be designed to conform to the photometry requirements of Table XVIII for upper beam and Table XIX for lower beam as specified in Table II-d for the specific headlamp unit and aiming method, when tested according to the procedure of S6.8.5.6 using any replaceable light source intended for use in the system under test.

S11.7 *Physical tests.* Each replaceable bulb headlamp must be designed to conform to the performance requirements associated with Table XXIII and the performance requirements associated with the color test and the plastic optical materials test, if applicable, of Table XXII.

S12 *Combination headlamps.* All combination headlamps must be of a type designated in Table II-b.

S12.1 *Installation.* A combination headlighting system must consist of the number of designated headlamp units shown for the specific system in Table II-b. The units must have their beams mechanized as shown in Table II-b. A system must provide in total not more than two upper beams and two lower beams. When installed on a motor vehicle, the headlamps (or parts thereof) that provide the lower beam must be of the same type, and provide a symmetrical effective projected luminous lens area when illuminated.

S12.2 *Photometry.* Each combination headlamp must be designed to conform to the photometry requirements of Table XVIII for upper beam and Table XIX for lower beam as specified in Table II-b for the specific headlamp unit and aiming method, when tested according to the procedure of S6.8.5.6.

S12.3 *Physical tests.* The component headlamps of any combination headlamp must be designed to conform to the performance requirements associated with Table XXIII and the performance requirements associated with the color test and the plastic optical materials test, if applicable, of Table XXII.

S13 *Motorcycle headlamp requirements.* A motorcycle headlighting system may consist of:

(a) One half of any headlighting system of Table II which provides both a full upper beam and full lower beam, and conforms to the requirements for that headlamp type. Where more than one lamp must be used, the lamps shall be mounted vertically, with the lower beam as high as practicable, or

(b) A headlighting system conforming to the requirements of this section.

S13.1 *Installation.* The headlamp system installed on a motorcycle must be located on the front.

S13.1.1 *Single headlamp.* If the system consists of a single headlamp, it must be mounted on the vertical centerline of the motorcycle. If the headlamp contains more than one light source, each light source must be mounted on the vertical centerline with the upper beam no higher than the lower beam, or horizontally disposed about the vertical centerline and mounted at the same height. If the light sources are horizontally disposed about the vertical centerline, the distance between the closest edges of the effective projected luminous lens area in front of the light sources must not be greater than 200 mm.

S13.1.2 *Two headlamps with both beams.* If the system consists of two headlamps, each of which provides both an upper and lower beam, the headlamps must be mounted either at the same height and symmetrically disposed about the vertical centerline or mounted on the vertical centerline. If the headlamps are horizontally disposed about the vertical centerline, the distance between the closest edges of their effective projected luminous lens areas must not be greater than 200 mm.

S13.1.3 *Two headlamps, upper beam and lower beam.* If the system consists of two headlamps, one of which provides an upper beam and one of which provides the lower beam, the headlamps must be located on the vertical centerline with the upper beam no higher than the lower beam, or horizontally disposed about the vertical centerline and mounted at the same height. If the headlamps are horizontally disposed about the vertical centerline, the distance between the closest edges of their effective projected luminous lens areas must not be greater than 200 mm.

S13.2 *Photometry.* Each motorcycle headlamp that is not one half of a headlighting system listed in Table II, must be designed to conform to the photometry requirements of Table XX when tested according to the procedure of S6.8.5.6.

S13.3 *Physical tests.* Each motorcycle headlamp that is not one half of a headlighting system listed in Table II, must be designed to conform to the performance requirements associated with the vibration test, moisture test, dust test, corrosion test, out of focus test, color test, and plastic optical material test requirements of Table XXII.

S13.4 *Motorcycle replaceable bulb headlamp marking.* Each replaceable bulb headlamp conforming to requirements for motorcycle use and that is equipped with a light source other than a replaceable light source meeting the requirements of S15, must have the word 'motorcycle' permanently marked on the lens in characters not less than 3 mm in height.

S13.5 *Motorcycle headlamp modulation system.* A headlamp on a motorcycle may be activated to modulate either the upper beam or the lower beam from its maximum intensity to a lesser intensity, provided that;

S13.5.1. *Modulation.*

(a) The rate of modulation must be 240 ±40 cycles per minute.

(b) The headlamp must be operated at maximum power for 50 to 70 percent of each cycle.

(c) The lowest intensity at any test point must be not less than 17 percent of the maximum intensity measured at the same point.

(d) The modulator switch must be wired in the power lead of the beam filament being modulated and not in the ground side of the circuit.

(e) Means must be provided so that both the lower beam and upper beam remain operable in the event of a modulator failure.

(f) The system must include a sensor mounted with the axis of its sensing element perpendicular to a horizontal plane. Headlamp modulation must cease whenever the level of light emitted by a tungsten filament light operating at 3000° Kelvin is either less than 270 lux of direct light for upward pointing sensors or less than 60 lux of reflected light for downward pointing sensors. The light is measured by a silicon cell type light meter that is located at the sensor and pointing in the same direction as the sensor. A Kodak Gray Card (Kodak R–27) is placed at ground level to simulate the road surface in testing downward pointing sensors.

(g) When tested in accordance with the test profile shown in Figure 9, the voltage drop across the modulator when the lamp is on at all test conditions for 12 volt systems and 6 volt systems must not be greater than 0.45 volt. The modulator must meet all the provisions of the standard after completion of the test profile shown in Figure 9.

(h) Means must be provided so that both the lower and upper beam function at design voltage when the headlamp control switch is in either the lower or upper beam position when the modulator is off.

S13.5.2 *Replacement modulators.* Each motorcycle headlamp modulator not intended as original equipment, or its container, must be labeled with the maximum wattage, and the minimum wattage appropriate for its use.

S13.5.2.1 *Replacement performance.* Each modulator, not intended as original equipment, must comply with S13.5.1 (a) through (g) when connected to a headlamp of the maximum rated power and a headlamp of the minimum rated power, and must provide means so that the modulated beam functions at design voltage when the modulator is off.

S13.5.2.2 *Replacement instructions.* Instructions, with a diagram, must be provided for mounting the light sensor, including location on the motorcycle, distance above the road surface, and orientation with respect to the light.

S14 *Headlamp aimability performance requirements.*

S14.1 *Headlamp mounting and aiming.* Except as provided in this paragraph, each headlamp must be installed on a motor vehicle with a mounting and aiming mechanism that allows aim inspection and adjustment of both vertical and horizontal aim, and is accessible for those purposes without removal of any vehicle parts, except for protective covers removable without the use of tools.

S14.2 *Headlamp obstructions.* When activated in a steady burning state, headlamps must not have any styling ornament or other feature, such as a translucent cover or grill, in front of the lens. Headlamp wipers may be used in front of the lens provided that the headlamp system is designed to conform with all applicable photometric requirements with the wiper stopped in any position in front of the lens.

S14.3. *Headlamp aiming systems.* When a headlamp system is installed on a motor vehicle, it must be aimable with at least one of the following: an externally applied aiming device, as specified in S14.8; an on-vehicle headlamp aiming device installed by the vehicle or lamp manufacturer, as specified in S14.9; or by visual/optical means, as specified in S14.10.

S14.4 *Aim adjustment interaction.* When installed on the vehicle, adjustment of one aim axis through its full on-vehicle range must not cause the aim of the other axis to deviate more than ±0.76°. If the performance specified is not achievable, the requirements of S14.4.1 apply, except that if the aiming mechanism is not a VHAD, the requirements specific to VHADs are not applicable, and the instruction must be specific to the aiming mechanism installed.

S14.4.1 Should the mechanism not meet the requirements above, a cautionary label must be placed adjacent to the mechanism stating the caution and including either the reason for the caution or the corrective action necessary. Each such label must also refer the reader to the vehicle operator's manual for complete instructions. Each such vehicle must be equipped with an operator's manual containing the complete instructions appropriate for the mechanism installed.

S14.5 *Horizontal adjustment-visually aimed headlamp.* A visually/optically aimable headlamp that has a lower beam must not have a horizontal adjustment mechanism unless such mechanism meets the requirements of this standard for a VHAD.

S14.6 *Optical axis marking.*

S14.6.1 *Optical axis marking-vehicle.* Each motor vehicle must be equipped with headlamps or beam contributors which have a mark or markings that are visible from the front of the headlamp when installed on the vehicle to identify the optical axis of the headlamp to assure proper horizontal and vertical alignment of the aiming screen or optical aiming equipment. The manufacturer is free to choose the design of the mark or markings. The mark or markings may be on the interior or exterior of the lens or indicated by a mark or central structure on the interior or exterior of the headlamp.

S14.6.2 *Optical axis marking-lamp.* Each headlamp or beam contributor that is not visually/optically aimable in accordance with S14.10 of this standard must be equipped with fiducial marks, aiming pads, or similar references of sufficient detail and accuracy, for determination of an appropriate vehicle plane to be used with the photometric procedures of S6.8.5.6 for correct alignment with the photometer axis when being tested for photometric compliance, and to serve for the aiming reference when the headlamp or beam contributor is installed on a motor vehicle. The fiducial marks, aiming pads, or similar references are protrusions, bubble vials, holes, indentations, ridges, scribed lines, or other readily identifiable marks established and described by the vehicle or headlamp manufacturer.

S14.6.3 *Optical axis marking-visual aim headlamp.* There must be a mark or markings identifying the optical axis of the headlamp visible from the front of the headlamp when installed on the vehicle, to assure proper horizontal and vertical alignment of the aiming screen or optical aiming equipment with the headlamp being aimed. The manufacturer is free to choose the design of the mark or markings. The mark or markings may be on the interior or exterior of the lens or indicated by a mark or central structure on the interior or exterior of the headlamp.

S14.7 *Moveable reflectors.* Each headlamp aimed by moving the reflector relative to the lens and headlamp housing, or vice versa, must conform with the photometric requirements applicable to it when tested according to the procedure of S6.8.5.6 with the lens at any position relative to the reflector within the full range of vertical pitch on the vehicle on which the headlamp system is installed and a horizontal range of ±2.5°. Additionally, it must comply with the aiming adjustment requirements of Table XXIII.

S14.8 *External aiming.* Each headlamp system that is capable of being mechanically aimed by externally applied headlamp aiming devices must be mechanically aimable using the equipment specified in SAE J602, *Headlamp Aiming Device for Mechanically Aimable Sealed Beam Headlamp Units, October 1980,* without the removal of any ornamental trim rings, covers, wipers, or other vehicle parts.

S14.8.1 *Headlamp aiming device locating plates.* Each headlamp system which is designed to use the Headlamp Aiming Device Locating Plates with

adjustable legs for the 100x165 mm unit and the 142x200 mm unit, and which has adjustable length legs, must meet the following requirements.

S14.8.1.1 The lens must have three aiming pads which meet the requirements of Figure 4, *Dimensional Specifications for Location of Aiming Pads on Replaceable Bulb Headlamp Units.* The aiming pads need not be centered at the geometric center of the lens, or on the optical axis. Except as provided in S14.8.1.2, a whole number, which represents the distance in tenths of an inch (*i.e.* 0.3 inch=3) from the aiming reference plane to the respective aiming pads which are not in contact with that plane, must be inscribed adjacent to each respective aiming pad on the lens. The height of these numbers must be not less than .157 inch (4 mm). If there is interference between the plane and the area of the lens between the aiming pads, the whole number represents the distance to a secondary plane. The secondary plane must be located parallel to the aiming reference plane and as close to the lens as possible without causing interference.

S14.8.1.2 If the most forward aiming pad is the lower inboard aiming pad, then the dimensions may be placed anywhere on the lens. The dimension for the outboard aiming pad (Dimension F in Figure 4) must be followed by the letter ''H'' and the dimension for the center aiming pad must be followed by the letter ''V.'' The dimensions must be expressed in tenths of an inch, in the manner described in S14.8.1.1.

S14.8.2 *Nonadjustable headlamp aiming device locating plates.* Each headlamp may be designed to use the nonadjustable Headlamp Aiming Device Locating Plate for the 100x165 mm. unit, the 142x200 mm. unit, the 146 mm. diameter unit, or the 178 mm. diameter unit of SAE J602, or the 92x150 mm. Type F unit, and incorporate lens-mounted aiming pads as specified for those units in Figures a, b, c, d, or e of this standard. If so designed, no additional lens marking is necessary to designate the type of plate or dimensions.

S14.9 *On-vehicle aiming.* Each headlamp system that is capable of being aimed by equipment installed on the vehicle must include a Vehicle Headlamp Aiming Device (VHAD) that conforms to the following requirements:

S14.9.1 *Aim.* The VHAD must provide for headlamp aim inspection and adjustment in both the vertical and horizontal axes.

S14.9.1.1 *Vertical aim.* The VHAD must include the necessary references and scales relative to the horizontal plane to assure correct vertical aim for photometry and aiming purposes. An off-vehicle measurement of the angle of the plane of the ground is permitted. In addition, an equal number of graduations from the ''O'' position representing angular changes in the axis in the upward and downward directions must be provided.

S14.9.1.1.1 Each graduation must represent a change in the vertical position of the mechanical axis not larger than 0.19° (1 in. at 25 ft.) to provide for variations in aim at least 1.2° above and below the horizontal, and have an accuracy relative to the zero mark of less than 0.1°.

S14.9.1.1.2 The VHAD must be marked to indicate headlamp aim movement in the upward and downward directions.

S14.9.1.1.3 Each graduation must indicate a linear movement of the scale indicator of not less than 0.05 in. (1.27 mm) if a direct reading analog indicator is used. If a remote reading indicator is provided, it must represent the actual aim movement in a clear, understandable format.

S14.9.1.1.4 The vertical indicator must perform through a minimum range of ±1.2°.

S14.9.1.1.5 Means must be provided in the VHAD for compensating for deviations in floor slope less than 1.2° from the horizontal that would affect the correct positioning of the headlamp for vertical aim.

S14.9.1.1.6 The graduations must be legible under an illumination level not greater than 30 foot candles, measured at the top of the graduation, by an observer having 20/20 vision (Snellen), and must permit aim adjustment to within 0.19° (1 in. at 25 ft.).

S14.9.1.2 *Horizontal aim.* The VHAD must include references and scales relative to the longitudinal axis of the vehicle necessary to assure correct horizontal aim for photometry and aiming purposes. An ''O'' mark must be used to indicate alignment of the headlamps relative to the longitudinal axis of the vehicle. In addition, an equal number of graduations from the ''O'' position representing equal angular changes in the axis relative to the vehicle axis must be provided.

S14.9.1.2.1 Each graduation must represent a change in the horizontal position of the mechanical axis not greater than 0.38° (2 in. at 25 ft.) to provide for variations in aim at least 0.76° (4 in. at 25 ft.) to the left and right of the longitudinal axis of the vehicle, and must have an accuracy relative to the zero mark of less than 0.1°.

S14.9.1.2.2 The VHAD must be marked to indicate headlamp aim movement in the left and right directions.

S14.9.1.2.3 The graduations must be legible under an illumination level not greater than 30 foot candles, measured at the top of the graduation, by an observer having 20/20 vision (Snellen), and must permit aim adjustment to within 0.38° (2 in. at 25 ft.).

S14.9.1.2.4 The horizontal indicator must perform through a minimum range of ±0.76° (4 in. at 25 ft.); however, the indicator itself must be capable of recalibration over a movement of ±2.5° relative to the longitudinal axis of the vehicle to accommodate any adjustment necessary for recalibrating the indicator after vehicle repair from accident damage.

S14.9.2 *Aiming instructions.*

S14.9.2.1 The instructions for properly aiming the headlighting system using the VHAD must be provided on a label permanently affixed to the vehicle adjacent to the VHAD, or in the vehicle operator's manual. The instructions must advise that the headlighting system is properly aimed if the appropriate vertical plane (as defined by the vehicle manufacturer) is perpendicular to both the longitudinal axis of the vehicle, and a horizontal plane when the vehicle is on a horizontal surface, and the VHAD is set at ''0'' vertical and ''0'' horizontal.

S14.9.2.2 Should a remote indicator or a remote indicator and adjuster be provided, the instructions must be placed in the operator's manual, and may also be placed on a label adjacent to the VHAD.

S14.9.3 *Permanent calibration.* Each headlamp equipped with a VHAD must be manufactured with its calibration permanently fixed by its manufacturer. Calibration in this case means the process of accurately aligning the geometry of the VHAD devices with the beam pattern for the purposes of compliance with the standard.

S14.9.4 *Replacement units.* When tested according to the procedure of S6.8.5.6. with any replacement headlamp unit(s) or light sources intended for use in the system under test, the VHAD and headlamp system must be designed to conform to the photometric performance requirements appropriate for the system under test.

S14.9.5 *Physical tests.* Each VHAD must comply with all applicable performance requirements of Table XXIII.

S14.10 *Visual/optical aiming.* Each visually/optically aimable headlamp must be designed to conform to the following requirements:

S14.10.1 *Vertical aim, lower beam.* Each lower beam headlamp must have

a cutoff in the beam pattern. It may be either on the left side or the right side of the optical axis, but once chosen for a particular headlamp system's design, the side chosen for the cutoff must not be changed for any headlamps intended to be used as replacements for those system's headlamps.

S14.10.1.1 *Vertical position of the cutoff.* The headlamp must be aimed vertically so that the cutoff is on the left side, at 0.4° down from the H–H line, or on the right side, at the H–H line.

S14.10.1.2 *Vertical gradient.* The gradient of the cutoff measured at either 2.5° L or 2.0° R must be not less than 0.13 based on the procedure of S14.10.1.5.

S14.10.1.3 *Horizontal position of the cutoff.* The width must be not less than 2°, with not less than 2° of its actual width centered at either 2.5° L, or 2.0° R.

S14.10.1.4 *Maximum inclination of the cutoff.* The vertical location of the highest gradient at the ends of the minimum width must be within ±0.2° of the vertical location of the maximum gradient measured at the appropriate vertical line (at either 2.5° L for a left side cutoff, or 2.0° R for a right side cutoff).

S14.10.1.5 *Measuring the cutoff parameter.*

S14.10.1.5.1 The headlamp is mounted on a fixture which simulates its actual design location on any vehicle for which the headlamp is intended. The fixture, with the headlamp installed, is attached to the goniometer table in such a way that the fixture alignment axes are coincident with the goniometer axes. The headlamp is energized at the specified test voltage. The cutoff parameter must be measured at a distance of 10 m. from a photosensor with a 10 mm. diameter.

S14.10.1.5.2 The headlamp beam pattern is aimed with the cutoff at the H–H axis. There is no adjustment, shimming, or modification of the horizontal axis of the headlamp or test fixture, unless the headlamp is equipped with a VHAD. In this case the VHAD is adjusted to zero.

S14.10.1.5.3 A vertical scan of the beam pattern is conducted for a headlamp with a left side gradient by aligning the goniometer on a vertical line at 2.5° L and scanning from 1.5° U to 1.5° D. For a headlamp with a right side gradient, a vertical scan of the beam pattern is conducted by aligning the goniometer on a vertical line at 2.0° R and scanning from 1.5° U to 1.5° D.

S14.10.1.5.4 Determine the maximum gradient within the range of the scan by using the formula: $G = \log E(a) - \log E(a+0.1)$, where ''G'' is the gradient, ''E'' is illumination and ''a'' is vertical angular position. The maximum value of the gradient ''G'' determines the vertical angular location of the cutoff. Perform vertical scans at 1.0° L and R of the measurement point of the maximum gradient to determine the inclination.

S14.10.2 *Horizontal aim, lower beam.* There is no adjustment of horizontal aim unless the headlamp is equipped with a horizontal VHAD. If the headlamp has a VHAD, it is set to zero.

S14.10.3 *Vertical aim, upper beam.*

S14.10.3.1 If the upper beam is combined in a headlamp with a lower beam, the vertical aim of the upper beam is not changed from the aim set using the procedures of S14.10.1. and S14.10.2 used for the lower beam.

S14.10.3.2 If the upper beam is not combined in a headlamp with a lower beam, the vertical aim of the upper beam is adjusted so that the maximum beam intensity is located on the H–H axis.

S14.10.4 *Horizontal aim, upper beam.*

S14.10.4.1 If the upper beam is combined in a headlamp with a lower beam, the horizontal aim of the upper beam is not changed from the aim set using the procedures of S14.10.1 and S14.10.2 used for the lower beam.

S14.10.4.2 If the upper beam is not combined in a headlamp with the lower beam and has fixed horizontal aim or has a horizontal VHAD, then the headlamp is mounted on a fixture which simulates its actual design location on any vehicle for which the headlamp is intended. The fixture, with the headlamp installed, is attached to the goniometer table in such a way that the fixture alignment axes are coincident with the goniometer axes. The headlamp must be energized at 12.8 ± 0.20 mV. There is no adjustment, shimming, or modification of the horizontal axis of the headlamp or test fixture, unless the headlamp is equipped with a VHAD. In this case, the VHAD is adjusted to zero.

S14.10.4.3. If the upper beam is not combined in a headlamp with a lower beam, and it does not have a VHAD, the horizontal aim of the upper beam is adjusted so that the maximium beam intensity is located on the V–V axis.

S14.10.5 *Photometric measurements.* A visually/optically aimable headlamp must be designed to conform to the lower beam requirements of columns LB1V, LB2V, LB3V, or LB4V of Table XIX when tested according to the procedure of S6.8.5.6.

S14.10.6 *Visual/optical identification marking.* Each letter used in marking according to this paragraph must be not less than 3 mm. high.

S14.10.6.1 The lens of a lower beam headlamp must be marked ''VOL'' if the headlamp is intended to be visually/optically aimed using the left side of the lower beam pattern. The lens of a lower beam headlamp must be marked ''VOR'' if the headlamp is intended to be visually/optically aimed using the right side of the lower beam pattern. The lens of a headlamp that is solely an upper beam headlamp and intended to be visually/optically aimed using the upper beam must be marked ''VO''.

S14.10.6.2 The lens of each sealed beam or integral beam headlamp must be marked ''VOR'' if the headlamp is of a type that was manufactured before May 1, 1997, and if such headlamp type has been redesigned since then to be visually/optically aimable.

S15 *Replaceable light sources.* Each replaceable light source must be designed to conform to the dimensions and electrical specifications furnished with respect to it pursuant to part 564 of this chapter, and must conform to the following requirements:

S15.1 *Markings.* If other than an HB Type, the light source must be marked with the bulb marking designation specified for it in compliance with Appendix A or Appendix B of part 564 of this chapter. The base of each HB Type must be marked with its HB Type designation. Each replaceable light source must also be marked with the symbol DOT and with a name or trademark in accordance with S17.1.

S15.2 *Power and flux measurement.* The measurement of maximum power and luminous flux that is submitted in compliance with Appendix A or Appendix B of part 564 of this chapter is made in accordance with this paragraph. The filament or discharge arc is seasoned before measurement of either. Measurement is made with the direct current test voltage regulated within one quarter of one percent. The test voltage is 12.8v. The measurement of luminous flux is made in accordance with the Illuminating Engineering Society of North America, LM–45, IES *Approved Method for Electrical and Photometric Measurements of General Service Incandescent Filament Lamps* (April 1980); is made with the black cap installed on Type HB1, Type HB2, Type HB4, and Type HB5, and on any other replaceable light source so designed; and is made with the electrical conductor and light source base shrouded with an opaque white cover, except for the portion normally located within the interior of the lamp housing. The measurement of luminous flux for the Types HB3 and HB4 is made with the base covered with a white cover as shown in the drawings for Types HB3

and HB4 filed in Docket No. NHTSA 98–3397. (The white cover is used to eliminate the likelihood of incorrect lumen measurement that will occur should the reflectance of the light source base and electrical connector be low).

S15.3 *Power and flux measurement.* The measurement of maximum power and luminous flux that is submitted in compliance with section VII of Appendix A of part 564 of this chapter, or section IV of Appendix B of part 564 of this chapter, is made with the direct current test voltage regulated within one quarter of one percent. The test voltage is 12.8v. The measurement of luminous flux is made in accordance with the Illuminating Engineering Society of North America, LM 45; *IES Approved Method for Electrical and Photometric Measurements of General Service Incandescent Filament Lamps* (April 1980). The filament of a replaceable light source is seasoned before such measurement. The white covers are used to eliminate the likelihood of incorrect lumen measurement that will occur should the reflectance of the light source base and electrical connector be low.

S15.3.1 For a light source with a resistive element type filament, seasoning of the light source is made in accordance with this standard. The measurement of luminous flux is made with the black cap installed on Type HB1, Type HB2, Type HB4, and Type HB5 light sources, and on any other replaceable light source so designed, and must be made with the electrical conductor and light source base shrouded with an opaque white colored cover, except for the portion normally located within the interior of the lamp housing. The measurement of luminous flux for Type HB3 and Type HB4 must be made with the base covered with the white cover shown in the drawings for Types HB3 and HB4 filed in Docket No. NHTSA 98–3397.

S15.3.2 For a light source using excited gas mixtures as a filament or discharge arc, seasoning of the light source system, including any ballast required for its operation, is made in accordance with section 4.0 of SAE Recommended Practice J2009 FEB93, *Discharge Forward Lighting Systems.* With the test voltage applied to the ballast input terminals, the measurement of luminous flux is made with the black cap installed, if so designed, and is made with an opaque white colored cover, except for the portion normally located within the interior of the lamp housing.

S15.4 *Ballast markings.* If a ballast is required for operation, each ballast must bear the following permanent markings:

(a) Name or logo of ballast manufacturer;

(b) Ballast part number or unique identification;

(c) Part number or other unique identification of the light source for which the ballast is designed;

(d) Rated laboratory life of the light source/ballast combination, if the information for the light source has been filed in Appendix B of part 564 of this chapter;

(e) A warning that ballast output voltage presents the potential for severe electrical shock that could lead to permanent injury or death;

(f) Ballast output power in watts and output voltage in rms volts AC or DC; and

(g) The symbol 'DOT'.''

S15.5 *Gas discharge laboratory life.* For light sources that use excited gas mixtures as a filament or discharge arc, the '' rated laboratory life'' is determined in accordance with sections 4.3 and 4.9 of SAE Recommended Practice J2009 FEB93, *Forward Discharge Lighting Systems.*

S15.6 *Physical tests.* Each replaceable light source must comply with the performance requirements associated with the deflection test and pressure test of Table XXIII.

S16 *Headlamp concealment device requirements.*

S16.1 While the headlamp is illuminated, its fully opened headlamp concealment device must remain fully opened should any loss of power to or within the headlamp concealment device occur.

S16.2 Whenever any malfunction occurs in a component that controls or conducts power for the actuation of the concealment device, each closed headlamp concealment device must be capable of being fully opened by a means not requiring the use of any tools. Thereafter, the headlamp concealment device must remain fully opened until intentionally closed.

S16.3 Except for malfunctions covered by S16.2, each headlamp concealment device must be capable of being fully opened and the headlamps illuminated by actuation of a single switch, lever, or similar mechanism, including a mechanism that is automatically actuated by a change in ambient light conditions.

S16.4 Each headlamp concealment device must be installed so that the headlamp may be mounted, aimed, and adjusted without removing any component of the device, other than components of the headlamp assembly.

S16.5 Except for cases of malfunction covered by S16.2, each headlamp concealment device must, within an ambient temperature range of −20° F to +120° F, be capable of being fully opened in not more than 3 seconds after the actuation of a driver-operated control.

S16.6 As an alternative to complying with the requirements of S16.1 through S16.5, a vehicle with headlamps incorporating VHAD or visual/optical aiming in accordance with this standard may meet the requirements for *Concealable lamps* in paragraph 5.14 of the following version of the Economic Commission for Europe Regulation 48 ''Uniform Provisions Concerning the Approval of Vehicles With Regard to the Installation of Lighting and Light-Signalling Devices'': E/ECE/324–E/ECE/TRANS/505, Rev.1/Add.47/Rev.1/Corr.2, 26 February 1996 (page 17), in the English language version. A copy of paragraph 5.14 may be reviewed at the DOT Docket Management Facility, U.S. Department of Transportation, Room PL–01, 400 Seventh Street, SW., Washington, DC 20590–0001. Copies of E/ECE/324–E/ECE/TRANS/505, Rev.1/Add.47/Rev.1/Corr.2, 26 February 1996 may be obtained from the ECE Internet site: *http://www.unece.org/trans/main/wp29/wp29regs.html* or by writing to: United Nations, Conference Services Division, Distribution and Sales Section, Office C.115–1, Palais des Nations, CH–1211, Geneva 10, Switzerland.

S16.7 *Certification election.* Manufacturers of vehicles with headlamps incorporating VHAD or visual/optical aiming must elect to certify to S16.1 through S16.5 or to S16.6 prior to, or at the time of certification of the vehicle, pursuant to 49 CFR part 567. The selection is irrevocable.

S17 *Headlamp marking requirements.*

S17.1 *Trademark.* The lens of each original and replacement equipment headlamp, and of each original and replacement equipment beam contributor must be marked with the name and/or trademark registered with the U.S. Patent and Trademark Office of the manufacturer of such headlamp or beam contributor, of its importer, or any manufacturer of a vehicle equipped with such headlamp or beam contributor. Nothing in this standard authorizes the marking of any such name and/or trademark by one who is not the owner, unless the owner has consented to it.

S17.2 *Voltage and trade number.* Each original and replacement equipment headlamp, and each original and replacement equipment beam contributor must be marked with its

voltage and with its part or trade number.

S17.3 *Sealed beam headlamp markings.* Each sealed beam headlamp lens must be molded with ''SEALED BEAM'' and the appropriate designation code as shown in Table II in characters no less than 6.35 mm in size. The face of any character molded on the surface of the lens must not be raised more than 0.5 mm above the lens surface. Type 1C1, 2C1, and 2D1 headlamps must have no raised markings on the outside surface of the lens between the diameters of 40 mm and 90 mm about the lens center. Type 1A1, 2A1, 2B1, and 2E1 headlamps must have no raised markings on the outside surface of the lens within a diameter of 70 mm about the lens center. Type LF, UF, 1G1, 2G1, and 2H1 headlamps must have no raised markings on the outside surface of the lens within a diameter of 35 mm about the lens center. A Type 1C1 headlamp may be marked ''1'' rather than ''1C1''. A Type 2C1 headlamp may be marked ''2'' rather than ''2C1''. A Type 2D1 headlamp may be marked ''TOP'' or ''2'' rather than ''2D1''.

S17.4 *Replaceable bulb headlamp markings.* The lens of each replaceable bulb headlamp must bear permanent marking in front of each replaceable light source with which it is equipped that states either: The HB Type (if the light source conforms to S15 of this standard for filament light sources); or the bulb marking/designation provided in compliance with Section VIII of Appendix A of part 564 (if the light source conforms to S15 of this standard for discharge light sources).

S17.5 *Additional headlamp markings.* Additional marking requirements for headlamps are found in S6.5, S10.4, S11.5, S13.4, S14.6, S14.8, and S14.10 of this standard.

S18 *Replaceable headlamp lens requirements.* A replacement lens for a replaceable bulb headlamp or integral beam headlamp that is not required to have a bonded lens must be provided with a replacement seal in a package that includes instructions for the removal and replacement of the lens, the cleaning of the reflector, and the sealing of the replacement lens to the reflector assembly. Each replacement headlamp lens, when installed according to the lens manufacturer's instructions on an integral beam or replaceable bulb headlamp, must not cause the headlamp to fail to comply with any of the requirements of this standard. Each replacement headlamp lens must be marked with the symbol ''DOT'' either horizontally or vertically, to constitute certification. Each replacement headlamp lens must also be marked with manufacturer and the part or trade number of the headlamp for which it is intended, and with the name and/or trademark of the lens manufacturer or importer that is registered with the U.S. Patent and Trademark Office. Nothing in this standard authorizes the marking of any such name and/or trademark by one who is not the owner, unless the owner has consented to it.

BILLING CODE 4910–59–P

TABLE I: REQUIRED LAMPS AND REFLECTIVE DEVICES

ALL PASSENGER CARS, MULTIPURPOSE PASSENGER VEHICLES, TRUCKS AND BUSES

LIGHTING DEVICE	NUMBER AND COLOR	MOUNTING LOCATION	MOUNTING HEIGHT	DEVICE ACTIVATION
Lower Beam Headlamps	White, of a Type and number listed in Table II	On the front, at the same height, symmetrically about the vertical centerline, as far apart as practicable, equal to or wider than the upper beam headlamps.	Not less than 55.9 cm. nor more than 137.2 cm.	The wiring harness or connector assembly of each headlighting system must be designed so that only those light sources intended for meeting lower beam photometrics are energized when the beam selector switch is in the lower beam position, and that only those light sources intended for meeting upper beam photometrics are energized when the beam selector switch is in the upper beam position, except for certain systems listed in Table II. May be flashed for signaling purposes.
Upper Beam Headlamps	White, of a Type and number listed in Table II	On the front, at the same height, symmetrically about the vertical centerline, as far apart as practicable, equal to or narrower than the lower beam headlamps.	Not less than 55.9 cm. nor more than 137.2 cm.	
Turn Signal Lamps	2 Amber	At or near the front, at the same height, symmetrically about the vertical centerline, as far apart as practicable.	Not less than 15 inches, nor more than 83 inches.	Flashing at 60 to 120 flashes per minute when actuated by the turn signal operating unit.
	2 Amber or red Truck tractor exception, see S6.1.1.3.	On the rear, at the same height, symmetrically about the vertical centerline, as far apart as practicable.		
Taillamps	2 Red	On the rear, at the same height, symmetrically about the vertical centerline, as far apart as practicable.	Not less than 15 inches, nor more than 72 inches.	Steady burning. Must be activated when the headlamps are activated in a steady burning state or the parking lamps are activated. May be activated when the headlamps are activated at less than full intensity as Daytime Running Lamps (DRL).
Stop Lamps	2 Red	On the rear, at the same height, symmetrically about the vertical centerline, as far apart as practicable.	Not less than 15 inches, nor more than 72 inches.	Steady burning. Must be activated upon application of the service brakes. If not optically combined with a turn signal lamp, must remain activated when the turn signal lamp is flashing. May also be activated by a device designed to retard the motion of the vehicle
Side Marker Lamps	2 Amber	On each side as far to the front as practicable.	Not less than 15 inches.	Steady burning except may be flashed for signaling purposes. Must be activated when the headlamps are activated in a steady burning state or the parking lamps are activated (not a requirement for vehicles 2032 mm. or more in overall width).
	2 Red (not required on truck tractor).	On each side as far to the rear as practicable.		

TABLE I: REQUIRED LAMPS AND REFLECTIVE DEVICES				
All PASSENGER CARS, MULTIPURPOSE PASSENGER VEHICLES, TRUCKS AND BUSES				
LIGHTING DEVICE	NUMBER AND COLOR	MOUNTING LOCATION	MOUNTING HEIGHT	DEVICE ACTIVATION
Reflex Reflectors	2 Amber	On each side as far to the front as practicable.	Not less than 15 inches, nor more than 60 inches.	Not applicable
	2 Red	On each side as far to the rear as practicable.		
	2 Red	On the rear, at the same height, symmetrically about the vertical centerline, as far apart as practicable. On a truck tractor may be mounted on the back of the cab not less than 4 inches above the height of the rear tires.		
Backup Lamp	1 White Additional lamps allowed to meet requirements.	On the rear.	No requirement.	Steady burning. Must be activated when the ignition switch is energized and reverse gear is engaged. Must not be energized when the vehicle is in forward motion.
License Plate Lamp	1 White Additional lamps allowed to meet requirements.	On the rear to illuminate license plate from top or sides.	No requirement.	Steady burning. Must be activated when the headlamps are activated in a steady burning state or when the parking lamps are activated (not a requirement for vehicles 2032 mm. or more in overall width).
ADDITIONAL LAMPS REQUIRED ON ALL PASSENGER CARS, AND MULTIPURPOSE PASSENGER VEHICLES, TRUCKS, AND BUSES LESS THAN 2032 MM. IN OVERALLWIDTH				
Parking lamps	2 Amber or white	On the front, at the same height, symmetrically about the vertical centerline, as far apart as practicable.	Not less than 15 inches, nor more than 72 inches.	Steady burning. Must be activated when the headlamps are activated in a steady burning state.
ADDITIONAL LAMP(S) REQUIRED ON ALL PASSENGER CARS, AND MULTIPURPOSE PASSENGER VEHICLES, TRUCKS AND BUSES LESS THAN 2032 MM. IN OVERALL WIDTH AND WITH A GVWR OF 10,000 LBS OR LESS				
High mounted stop lamp	1 Red, or 2 red where exceptions apply See Section 6.1.1.2.	On the rear including glazing, with the lamp center on the vertical centerline as viewed from the rear.	Not less than 34 inches except for passenger cars. See Section 6.1.3.2.	Steady burning. Must only be activated upon application of the service brakes.

TABLE I: REQUIRED LAMPS AND REFLECTIVE DEVICES				
ADDITIONAL LAMPS AND REFLECTIVE DEVICES REQUIRED ON ALL PASSENGER CARS, MULTIPURPOSE PASSENGER VEHICLES, TRUCKS AND BUSES 30 FEET OR LONGER				
LIGHTING DEVICE	NUMBER AND COLOR	MOUNTING LOCATION	MOUNTING HEIGHT	DEVICE ACTIVATION
Intermediate side marker lamps	2 Amber	On each side located at or near the midpoint between the front and rear side marker lamps.	Not less than 15 inches.	Steady burning except may be flashed for signaling purposes. Must be activated when the headlamps are activated in a steady burning state or the parking lamps are activated (not a requirement for vehicles 2032 mm. or more in overall width).
Intermediate side reflex reflectors	2 Amber	On each side located at or near the midpoint between the front and rear side reflex reflectors.	Not less than 15 inches, nor more than 60 inches.	Not applicable
ADDITIONAL LAMPS REQUIRED ON ALL MULTIPURPOSE PASSENGER VEHICLES, TRUCKS AND BUSES 2032 MM. OR MORE IN OVERALL WIDTH				
Clearance lamps	2 Amber	On the front to indicate the overall width of the vehicle, or width of cab on truck tractor, at the same height, symmetrically about the vertical centerline. May be located at a location other than the front if necessary to indicate the overall width of the vehicle, or for protection from damage during normal operation of the vehicle.	As near the top as practicable.	Steady burning.
	2 Red (not required on truck tractor).	On the rear to indicate the overall width of the vehicle, at the same height, symmetrically about the vertical centerline. May be located at a location other than the rear if necessary to indicate the overall width of the vehicle, or for protection from damage during normal operation of the vehicle.	As near the top as practicable, except where the rear identification lamps are mounted at the extreme height of the vehicle.	Steady burning.
Identification lamps	3 Amber	On the front, at the same height, as close as practicable to the vertical centerline, with lamp centers equally spaced not less than 6 inches or more than 12 inches apart.	As near the top of the vehicle or top of the cab as practicable.	Steady burning.
	3 Red (not required on truck tractor).	On the rear, at the same height, as close as practicable to the vertical centerline, with lamp centers equally spaced not less than 6 inches or more than 12 inches apart.	As near the top as practicable.	Steady burning.

TABLE I: REQUIRED LAMPS AND REFLECTIVE DEVICES				
ADDITIONAL LAMPS REQUIRED ON ALL SCHOOL BUSES EXCEPT MULTIFUNCTION SCHOOL ACTIVITY BUSES				
LIGHTING DEVICE	NUMBER AND COLOR	MOUNTING LOCATION	MOUNTING HEIGHT	DEVICE ACTIVATION
Signal warning lamps	2 Red required, 2 amber optional	On the front of the cab as far apart as practicable, but in no case closer than less than 40 inches apart. Amber lamps, where installed, at the same height as and just inboard of the red lamp.	As high as practicable but at least above the windshield.	Flashing alternately between 60 to 120 cycles per minute, with an activation period sufficient to allow the lamp to reach full brightness, when actuated by a manual switch. Amber lamps, where installed, may only be activated by manual or foot operation, and must be automatically deactivated and the red lamps must be automatically activated when the bus entrance door is opened.
	2 Red required, 2 amber optional	On the rear cab as far apart as practicable, but in no case closer than less than 40 inches apart. Amber lamps, where installed, at the same height as and just inboard of the red lamp.	As high as practicable but at least above the top of any side window opening.	Flashing alternately between 60 to 120 cycles per minute, with an activation period sufficient to allow the lamp to reach full brightness, when actuated by a manual switch. Amber lamps, where installed, may only be activated by manual or foot operation, and must be automatically deactivated and the red lamps must be automatically activated when the bus entrance door is opened.
ADDITIONAL LAMPS ALLOWED BUT NOT REQUIRED ON PASSENGER CARS, MULTIPURPOSE PASSENGER VEHICLES, TRUCKS AND BUSES				
Daytime running lamp (DRL)	2 identically colored either white, white to yellow, white to selective yellow, selective yellow, or yellow	On the front, symmetrically disposed about the vertical centerline if not a pair of lamps required by this standard or if not optically combined with a pair of lamps required by this standard.	Not more than 1.067 meters above the road surface if not a pair of lamps required by this standard or if not optically combined with a pair of lamps required by this standard.	Steady burning. Automatically activated as determined by the vehicle manufacturer and automatically deactivated when the headlamp control is in any "on" position. See S7.11.2 for additional activation requirements when mounted close to, or combined with, a turn signal lamp.
ALL TRAILERS				
Turn Signal Lamps	2 Red or amber	On the rear, at the same height, symmetrically about the vertical centerline, as far apart as practicable.	Not less than 15 inches, nor more than 83 inches.	Flashing at 60 to 120 flashes per minute, actuated by the turn signal operating unit.
Taillamps	2 Red or 1 red on trailers less than 760 mm wide.	On the rear, at the same height, symmetrically about the vertical centerline, as far apart as practicable. A single lamp must be mounted at or near the vertical centerline.	Not less than 15 inches, nor more than 72 inches.	Steady burning.

TABLE I: REQUIRED LAMPS AND REFLECTIVE DEVICES

ALL TRAILERS				
LIGHTING DEVICE	**NUMBER AND COLOR**	**MOUNTING LOCATION**	**MOUNTING HEIGHT**	**DEVICE ACTIVATION**
Stop Lamps	2 Red, or 1 red on trailers less than 760 mm wide.	On the rear, at the same height, symmetrically about the vertical centerline, as far apart as practicable. A single lamp must be mounted at or near the vertical centerline.	Not less than 15 inches, nor more than 72 inches.	Steady burning. Must be activated upon application of the service brakes. If not optically combined with a turn signal lamp, must remain activated when the turn signal lamp is flashing. May also be activated by a device designed to retard the motion of the vehicle
Side Marker Lamps	2 Amber. None required on trailers less than 1829 mm [6 ft] in overall length including the trailer tongue.	On each side as far to the front as practicable exclusive of the trailer tongue.	Not less than 15 inches.	Steady burning except may be flashed for signaling purposes.
	2 Red	On each side as far to the rear as practicable.		
Reflex Reflectors	2 Amber. None required on trailers less than 1829 mm [6 ft] in overall length including the trailer tongue.	On each side as far to the front as practicable exclusive of the trailer tongue.	Not less than 15 inches, nor more than 60 inches.	Not applicable
	2 Red	On each side as far to the rear as practicable.		
	2 Red or 1 red on trailers less than 760 mm wide.	On the rear, at the same height, symmetrically about the vertical centerline, as far apart as practicable. A single reflector must be mounted at or near the vertical centerline.		
License Plate Lamp	1 White. Additional lamps allowed to meet requirements.	On the rear to illuminate license plate from top or sides.	No requirement.	Steady burning.

TABLE I: REQUIRED LAMPS AND REFLECTIVE DEVICES				
ADDITIONAL LAMPS REQUIRED ON ALL TRAILERS 2032 MM. OR MORE IN OVERALL WIDTH				
LIGHTING DEVICE	NUMBER AND COLOR	MOUNTING LOCATION	MOUNTING HEIGHT	DEVICE ACTIVATION
Clearance lamps	2 Amber	On the front to indicate the overall width of the vehicle, at the same height, symmetrically about the vertical centerline, as far apart as practicable.	No requirement.	Steady burning.
	2 Red	On the rear to indicate the overall width of the vehicle, at the same height, symmetrically about the vertical centerline, as far apart as practicable.	No requirement.	Steady burning.
	2 Amber to front and 2 Red to rear	On a boat trailer the requirement for front and rear clearance lamps may be met by installation at or near the midpoint on each side of a dual facing lamp so as to indicate the extreme width.	No requirement	Steady burning.
Identification lamps	3 Red	On the rear, at the same height, as close as practicable to the top of the vehicle, as close as practicable to the vertical centerline, with lamp centers equally spaced not less than 6 inches or more than 12 inches apart.	No Requirement	Steady burning
ADDITIONAL LAMPS AND REFLECTIVE DEVICES REQUIRED ON ALL TRAILERS 30 FEET OR LONGER				
Intermediate side marker lamps	2 Amber	On each side located at or near the midpoint between the front and rear side marker lamps.	Not less than 15 inches.	Steady burning except may be flashed for signaling purposes.
Intermediate side reflex reflectors	2 Amber	On each side located at or near the midpoint between the front and rear side reflex reflectors.	Not less than 15 inches, nor more than 60 inches.	Not applicable
ALL MOTORCYCLES				
Lower Beam Headlamps	White, of a type and number listed in S13	On the front, at the same height, symmetrically about the vertical centerline, as far apart as practicable, equal to or wider than the upper beam headlamps.	Not less than 55.9 cm. nor more than 137.2 cm.	The wiring harness or connector assembly of each headlighting system must be designed so that only those light sources intended for meeting lower beam photometrics are energized when the beam selector switch is in the lower beam position, and that only those light sources intended for meeting upper beam photometrics are energized when the beam selector switch is in the upper beam position, except for certain systems listed in Table II. May be flashed for signaling purposes. The upper beam or the lower beam, but not both, may be wired to modulate from a higher intensity to a lower intensity in accordance with S13.5
Upper Beam Headlamps	White, of a type and number listed in S13	On the front, at the same height, symmetrically about the vertical centerline, as far apart as practicable, equal to or narrower than the lower beam headlamps.	Not less than 55.9 cm. nor more than 137.2 cm.	

TABLE I: REQUIRED LAMPS AND REFLECTIVE DEVICES

ALL MOTORCYCLES				
LIGHTING DEVICE	**NUMBER AND COLOR**	**MOUNTING LOCATION**	**MOUNTING HEIGHT**	**DEVICE ACTIVATION**
Turn Signal Lamps	2 Amber. None required on a motor driven cycle whose speed attainable in 1 mile is 30 mph or less.	At or near the front, at the same height, symmetrically about the vertical centerline, and having a minimum horizontal separation distance (centerline of lamps) of 16 inches. Minimum edge-to-edge separation distance between lamp and headlamp is 4 inches.	Not less than 15 inches, nor more than 83 inches.	Flashing at 60 to 120 flashes per minute, actuated by the turn signal operating unit.
	2 Amber or red. None required on a motor driven cycle whose speed attainable in 1 mile is 30 mph or less.	At or near the rear, at the same height, symmetrically about the vertical centerline, and having a minimum horizontal separation distance (centerline to centerline of lamps) of 9 inches. Minimum edge-to-edge separation distance between lamp and tail or stop lamp is 4 inches, when a single stop and taillamp is installed on the vertical centerline and the turn signal lamps are red.		
Taillamps	1 Red	On the rear, on the vertical centerline except that if two are used, they must be symmetrically disposed about the vertical centerline.	Not less than 15 inches, nor more than 72 inches.	Steady burning. Must be activated when the headlamps are activated in a steady burning state.
Stop Lamps	1 Red	On the rear, on the vertical centerline except that if two are used, they must be symmetrically disposed about the vertical centerline.	Not less than 15 inches, nor more than 72 inches.	Steady burning. Must be activated upon application of the service brakes. If not optically combined with a turn signal lamp, must remain activated when the turn signal lamp is flashing. May also be activated by a device designed to retard the motion of the vehicle
Reflex Reflectors	2 Amber	On each side as far to the front as practicable.	Not less than 15 inches, nor more than 60 inches.	Not applicable
	2 Red	On each side as far to the rear as practicable.		
	1 Red	On the rear, on the vertical centerline except that, if two are used on the rear, they must be symmetrically disposed about the vertical centerline.		
License Plate Lamp	1 White. Additional lamps allowed to meet requirements.	On the rear to illuminate license plate.	No requirement.	Steady burning. Must be activated when the headlamps are activated in a steady burning state.

TABLE II-a. HEADLIGHTING SYSTEMS-SEALED BEAMS

SYSTEM DESIGNATION	UNIT NOMINAL SIZE	NUMBER OF HEADLAMPS	HEADLAMP DESIGNATION	BEAM COMPOSITION	PHOTOMETRY REQUIREMENTS REFERENCE			MAXIMUM FILAMENT POWER AT 12.8 V.	
					TABLE XVIII	TABLE XIX			
					UPPER BEAM MECHANICAL AND VISUAL AIM	LOWER BEAM MECH AIM	LOWER BEAM VISUAL AIM	UPPER BEAM	LOWER BEAM
TYPE A	100x165 mm	2	1A1	1 UB FILAMENT	UB4	N.A.	N.A.	55	N.A.
		2	2A1	1 UB & 1 LB FILAMENTS	UB5	LB4M	LB2V	43	65
TYPE B	142x200 mm	2	2B1	1 UB & 1 LB FILAMENTS	UB3	LB3M	LB3V	70	60
TYPE C	146 mm DIA.	2	1C1	1 UB FILAMENT	UB4	N.A.	N.A.	55	N.A.
		2	2C1	1 UB & 1 LB FILAMENTS	UB5	LB4M	LB2V	43	65
TYPE D	178 mm DIA.	2	2D1	1 UB & 1 LB FILAMENTS	UB3	LB3M	LB3V	65	55
TYPE E	100X165 mm	2	2E1	1 UB & 1 LB FILAMENTS	UB3	LB3M	LB3V	70	60
TYPE F[2]	92x150 mm	2	UF	1 UB FILAMENT	UB1	N.A.	N.A.	70	N.A.
		2	LF	1 LB FILAMENT	N.A[1]	LB1M[1]	LB1[1]	N.A.	60
TYPE G		2	1G1	1 UB FILAMENT	UB4	N.A.	N.A.	55	N.A.
		2	2G1	1 UB & 1 LB FILAMENTS	UB5	LB4M	LB2V	43	65
TYPE H		2	2H1	1 UB & 1 LB FILAMENTS	UB3	LB3M	LB3V	70	60

[1] Headlamps marked "LF" may remain activated when headlamps marked "UF" are activated.

[2] Type F headlamps may be mounted on common or parallel seating and aiming planes to permit simultaneous aiming with restrictions. See S10.3.

TABLE II-b. HEADLIGHTING SYSTEMS-COMBINATION

SYSTEM DESIGNATION	SYSTEM COMPOSITION	PHOTOMETRY REQUIREMENTS REFERENCE		
		TABLE XVIII	TABLE XIX	
		UPPER BEAM MECHANICAL AND VISUAL AIM	LOWER BEAM MECH AIM	LOWER BEAM VISUAL AIM
2 LAMP SYSTEM	A COMBINATION OF TWO DIFFERENT HEADLAMPS CHOSEN FROM ; TYPE F, AN INTEGRAL BEAM HEADLAMP, OR A REPLACEABLE BULB HEADLAMP.	UB2[3]	LB2M[3]	LB2V[3]
4 LAMP SYSTEM	ANY COMBINATION OF FOUR DIFFERENT HEADLAMPS (2 PAIRS) CHOSEN FROM ; TYPE F, AN INTEGRAL BEAM HEADLAMP, OR A REPLACEABLE BULB HEADLAMP.	UB1	LB1M[4]	LBV[4]

[3] Headlamps designed to conform to the photometry requirements of UB2 and LB2M or LB2V may allow the lower beam light source(s) to remain activated when an upper beam light source is activated if the lower beam light source(s) contribute to upper beam photometric compliance.

[4] Lower beams may remain activated when upper beams are activated.

TABLE II-c. HEADLIGHTING SYSTEMS-INTEGRAL BEAMS

SYSTEM DESIGNATION	BEAM COMPOSITION	PHOTOMETRY REQUIREMENTS REFERENCE		
		TABLE XVIII	TABLE XIX	
		UPPER BEAM MECHANICAL AND VISUAL AIM	LOWER BEAM MECH AIM	LOWER BEAM VISUAL AIM
2 LAMP SYSTEM	UPPER BEAM & LOWER BEAM	UB2[3] OR UB3	LB2M[3] OR LB3M	LB2V[3] OR LB3V
4 LAMP SYSTEM	UPPER BEAM	UB4	N.A.	N.A.
	UPPER BEAM & LOWER BEAM	UB5	LB4M	LB2V
4 LAMP SYSTEM	UPPER BEAM (U)	UB1	N.A.	N.A.
	LOWER BEAM (L)	N.A.[4]	LB1M[4]	LB1V[4]
4 LAMP SYSTEM	UPPER BEAM	UB6	N.A.	N.A.
	LOWER BEAM	N.A.[5]	LB5M[5]	LB4V[5]
BEAM CONTRIBUTOR	UPPER BEAM & LOWER BEAM	UB1[6]	LB1M[4][6]	LB1V[4][6]

[3] Headlamps designed to conform to the photometry requirements of UB2 and LB2M or LB2V may allow the lower beam light source(s) to remain activated when an upper beam light source is activated if the lower beam light source(s) contribute to upper beam photometric compliance.
[4] Lower beams may remain activated when upper beams are activated.
[5] Lower beams must remain activated when upper beams are activated.
[6] Beam contributor photometric allocation formula applies. See S6.8.5.6.6.

TABLE II-d. HEADLIGHTING SYSTEMS-REPLACEABLE BULB

SYSTEM DESIGNATION	LIGHT SOURCE COMPOSITION	PHOTOMETRY REQUIREMENTS REFERENCE		
		TABLE XVIII	TABLE XIX	
		UPPER BEAM MECHANICAL AND VISUAL AIM	LOWER BEAM MECH AIM	LOWER BEAM VISUAL AIM
2 LAMP SYSTEM	ANY DUAL FILAMENT TYPE, OTHER THAN HB2, USED ALONE OR WITH ANOTHER DUAL FILAMENT TYPE OTHER THAN HB2.	UB2[3] OR UB3	LB2M[3] OR LB3M	LB2V[3] OR LB3V
2 LAMP SYSTEM	HB2 OR ANY SINGLE FILAMENT TYPE USED ALONE OR WITH ANY OTHER SINGLE OR DUAL FILAMENT TYPE.	UB2[3]	LB2M[3]	LB2V[3]
4 LAMP SYSTEM	ANY DUAL FILAMENT TYPE, OTHER THAN HB2, USED ALONE OR WITH ANOTHER DUAL FILAMENT TYPE OTHER THAN HB2.	UB1 OR UB3	LB1M OR LB3M	LB1V OR LB3V
4 LAMP SYSTEM	HB2 OR ANY SINGLE FILAMENT TYPE USED ALONE OR WITH ANY OTHER SINGLE OR DUAL FILAMENT TYPE. (U & L)	UB1	LB1M	LB1V

[3] Headlamps designed to conform to the photometry requirements of UB2 and LB2M or LB2V may allow the lower beam light source(s) to remain activated when an upper beam light source is activated if the lower beam light source(s) contribute to upper beam photometric compliance.

TABLE III: CONSPICUITY SYSTEMS REQUIREMENTS			
		Retroreflective Sheeting	Conspicuity Reflex Reflectors
Application pattern.	Alternating red and white material	As shown in Figure 12, where alternating material is required to be installed, except for a segment that is trimmed to clear obstructions, or lengthened to provide red sheeting near red lamps, alternating material must be installed with each white and red segment having a length of 300 ±150 mm. Neither white nor red sheeting must represent more than two thirds the aggregate of any continuous strip marking the width of a trailer, or any continuous or broken strip marking its length.	Where alternating color material is required to be installed, reflex reflectors must be installed in a repetitive pattern of two or three white reflectors alternating with two or three red reflectors, with the center of each reflector not more than 100 mm. from the center of each adjacent reflector.
	White material		Where white material is required to be installed, white reflex reflectors must be installed with the center of each reflector not more than 100 mm. from the center of each adjacent reflector.
Application location.		Not permitted (as illustrated in Figure 12) to be installed to discontinuous surfaces such as outside ribs, stake post pickets on platform trailers, and external protruding beams, or to items of equipment such as door hinges and lamp bodies on trailers and body joints, stiffening beads, drip rails, and rolled surfaces on truck tractors.	
Application spacing.		As illustrated in Figure 12, the edge of any white sheeting must not be located closer than 75 mm. to the edge of the luminous lens area of any red or amber lamp that is required by this standard. The edge of any red sheeting must not be located closer than 75 mm. to the edge of the luminous lens area of any amber lamp that is required by this standard.	

TABLE III: CONSPICUITY SYSTEMS REQUIREMENTS

Vehicle	Element	Element color	Requirement
Trailer rear	Element 1	Alternating	As shown in Figure 11, a strip of sheeting or reflectors, as horizontal as practicable, across the full width of the trailer, as close to the extreme edges as practicable, and as close as practicable to not less than 375 mm. and not more than 1525 mm. above the road surface at the stripe centerline with the trailer at curb weight.
	Element 2 (Not required for container chassis or for platform trailers without bulkheads).	White	As shown in Figure 11, two pairs of strips of sheeting or reflectors, each pair consisting of strips 300 mm. long, applied horizontally and vertically to the right and left upper contours of the body, as viewed from the rear, as close to the top of the trailer and as far apart as practicable. If the perimeter of the body, as viewed from the rear, is other than rectangular, the strips may be applied along the perimeter, as close as practicable to the uppermost and outermost areas of the rear of the body on the left and right sides.
	Element 3 (Not required for trailers without underride protection devices).	Alternating	As shown in Figure11, a strip of Grade DOT-C2 sheeting no less than 38 mm. wide or reflectors applied across the full width of the horizontal member of the rear underride protection device.
Trailer side	Side	Alternating	As shown in Figure 11, a strip of sheeting or reflectors applied to each side, as horizontal as practicable, originating and terminating as close to the front and rear as practicable, as close as practicable to not less than 375 mm. and not more than 1525 mm. above the road surface at the stripe centerline at curb weight, except that at the location chosen the strip must not be obscured in whole or in part by other motor vehicle equipment or trailer cargo. The strip need not be continuous as long as not less than half the length of the trailer is covered and the spaces are distributed as evenly as practicable. If necessary to clear rivet heads or other similar obstructions, Grade DOT-C2 sheeting may be separated into two 25 mm. wide strips of the same length and color, separated by a space of not more than 25 mm. and used in place of the retroreflective sheeting that would otherwise be applied.

TABLE III: CONSPICUITY SYSTEMS REQUIREMENTS

Vehicle	Element	Element color	Requirement
Truck tractor	Element 1	Alternating	As shown in Figure 13, two strips of sheeting or reflectors, each not less than 600mm. long, located as close as practicable to the edges of the rear fenders, mudflaps, or the mudflap support brackets, to mark the width of the truck tractor. The strips must be mounted as horizontal as practicable, in a vertical plane facing the rear, on the rear fenders, on the mudflap support brackets, or on the mudflaps. Strips on mudflaps must be mounted not lower than 300 mm. below the upper horizontal edge of the mudflap. If the vehicle is certified with temporary mudflap support brackets, the strips must be mounted on the mudflaps or on plates transferable to permanent mudflap support brackets. For a truck tractor without mudflaps, the strips may be mounted outboard of the frame on brackets behind the rear axle or on brackets ahead of the rear axle and above the top of the rear tires at unladen vehicle height, or they may be mounted directly or indirectly to the back of the cab as close to the outer edges as practicable, above the top of the tires, and not more than 1525 mm. above the road surface at unladen vehicle height. If the strips are mounted on the back of the cab, no more than 25% of their cumulative area may be obscured by vehicle equipment as determined in a rear orthogonal view.
	Element 2	White	As shown in Figure 13, two pairs of strips of sheeting or reflectors, each pair consisting of strips 300 mm. long, applied horizontally and vertically as practicable to the right and left upper contours of the cab, as close to the top of the cab and as far apart as practicable. No more than 25% of their cumulative area may be obscured by vehicle equipment as determined in a rear orthogonal view. If one pair must be relocated to avoid obscuration by vehicle equipment, the other pair may be relocated in order to be mounted symmetrically. If the rear window is so large as to occupy all the practicable space, the material may be attached to the edge of the window itself.

TABLE IV. EFFECTIVE PROJECTED LUMINOUS LENS AREA REQUIREMENTS				
LIGHTING DEVICE	**PASSENGER CARS, MULTIPURPOSE PASSENGER VEHICLES, TRUCKS, TRAILERS, AND BUSES OF LESS THAN 2032 MM. IN OVERALL WIDTH** MINIMUM EFFECTIVE PROJECTED LUMINOUS LENS AREA (sq. mm.)		**MULTIPURPOSE PASSENGER VEHICLES, TRUCKS, TRAILERS, AND BUSES 2032 MM. OR MORE IN OVERALL WIDTH** MINIMUM EFFECTIVE PROJECTED LUMINOUS LENS AREA EACH LAMP (sq. mm.)	**MOTORCYCLES** MINIMUM EFFECTIVE PROJECTED LUMINOUS LENS AREA (sq. mm.)
	EACH COMPARTMENT	**TOTAL DEVICE**		
Front turn signal lamp	2200	2200	7500	2258
Rear turn signal lamp	2200	5000	7500	2258
Stop lamp	2200	5000	7500	5000[1]

[1] A motor driven cycle whose speed attainable in 1 mile is 30 mph or less may be equipped with a stop lamp whose minimum effective projected luminous lens area of not less than 2258 sq. mm.

TABLE IV. EFFECTIVE PROJECTED LUMINOUS LENS AREA REQUIREMENTS		
LIGHTING DEVICE	**PASSENGER CARS, MULTIPURPOSE PASSENGER VEHICLES, TRUCKS, AND BUSES OF LESS THAN 2032 MM. IN OVERALL WIDTH AND WITH A GVWR OF 10,000 LBS OR LESS USING A SINGLE LAMP** MINIMUM EFFECTIVE PROJECTED LUMINOUS LENS AREA (sq. mm.)	**MULTIPURPOSE PASSENGER VEHICLES, TRUCKS, AND BUSES OF LESS THAN 2032 MM. IN OVERALL WIDTH AND WITH A GVWR OF 10,000 LBS OR LESS USING DUAL LAMPS OF IDENTICAL SIZE AND SHAPE** MINIMUM EFFECTIVE PROJECTED LUMINOUS LENS AREA EACH LAMP (sq. mm.)
High-mounted stop lamp	2903	1452

TABLE IV. EFFECTIVE PROJECTED LUMINOUS LENS AREA REQUIREMENTS	
LIGHTING DEVICE	**SCHOOL BUS** MINIMUM EFFECTIVE PROJECTED LUMINOUS LENS AREA EACH LAMP (sq. mm.)
School bus signal lamp	12,258

TABLE V. VISIBILITY REQUIREMENTS OF INSTALLED LIGHTING DEVICES		
LIGHTING DEVICE	**APPLICABLE VEHICLES**	**REQUIRED VISIBILITY**
Backup lamp	All, where installed.	Lamps must be mounted so that the optical center of at least one lamp is visible from any eye point elevation from at least 1828 mm. to 610 mm. above the horizontal plane on which the vehicle is standing; and from any position in the area, rearward of a vertical plane perpendicular to the longitudinal axis of the vehicle, 914 mm. to the rear of the vehicle and extending 914 mm. beyond each side of the vehicle.
High-mounted stop lamp	All, where installed.	Signal must be visible to the rear through a horizontal angle from 45° to the left to 45° to the right of the longitudinal axis of the vehicle. (Single lamp or combination of dual lamps)
School bus signal lamp	All school buses.	Signal of front lamps to the front and rear lamps to the rear must be unobstructed within area bounded by 5° up to 10° down and 30° left to 30° right.

TABLE V. VISIBILITY REQUIREMENTS OF INSTALLED LIGHTING DEVICES (EXISTING SAE VISIBILITY ALTERNATIVE)		
LIGHTING DEVICE	**APPLICABLE VEHICLES**	**REQUIRED VISIBILITY[1]**
Turn signal lamp	All passenger cars, multipurpose passenger vehicles, trucks, buses, motorcycles, and trailers of less than 2032 mm. overall width.	Unobstructed minimum effective projected luminous lens area of 1250 sq. mm .through horizontal angle of H-V to H-45° OB.
	All multipurpose passenger vehicles, trucks, buses, and trailers of 2032 mm. or more overall width.	Unobstructed minimum effective projected luminous lens area of 1300 sq. mm. through horizontal angle of H-V to H-45° OB. Where more than one lamp or optical area is lighted on each side of the vehicle, only one such area on each side need comply.
Stop lamp	All, where installed.	Unobstructed minimum effective projected luminous lens area of 1250 sq. mm. through horizontal angle of H-45° IB to H-45° OB. Where more than one lamp or optical area is lighted on each side of the vehicle, only one such area on each side need comply.
Taillamp	All, where installed.	Unobstructed minimum effective projected luminous lens area of 1250 sq. mm. through horizontal angle of H-45° IB to H-45° OB. Where more than one lamp or optical area is lighted on each side of the vehicle, only one such area on each side need comply.

[1] IB indicates an inboard direction (toward the vehicle's longitudinal centerline) and OB indicates an outboard direction.

TABLE V. VISIBILITY REQUIREMENTS OF INSTALLED LIGHTING DEVICES - LENS AREA VISIBILITY OPTION				
LIGHTING DEVICE	APPLICABLE VEHICLES	CORNER POINTS[1][2]		REQUIRED VISIBILITY
Turn signal lamp[3]	All, where installed.	15° UP - 45° IB	15° UP - 45° OB	Unobstructed minimum effective projected luminous lens area of 1250 sq. mm. in any direction throughout the pattern defined by the specified corner points.
		15° DOWN - 45° IB	15° DOWN - 45° OB	
Stop lamp	All, where installed.	15° UP - 45° IB	15° UP - 45° OB	
		15° DOWN - 45° IB	15° DOWN - 45° OB	
Taillamp	All, where installed.	15° UP - 45° IB	15° UP - 45° OB	
		15° DOWN - 45° IB	15° DOWN - 45° OB	
Parking lamp	All, where installed.	15° UP - 45° IB	15° UP - 45° OB	
		15° DOWN - 45° IB	15° DOWN - 45° OB	

(1) IB indicates an inboard direction (toward the vehicle's longitudinal centerline) and OB indicates an outboard direction

(2) Where lamp is mounted less than 750 mm. above the road surface, as measured to the axis of reference, visibility requirements are reduced to 5° down.

(3) Where more than one lamp or optical area is lighted at the front on each side of a multipurpose passenger vehicle, truck, trailer, or bus, of 2032 mm. or more overall width, only one such area need comply.

TABLE V. VISIBILITY REQUIREMENTS OF INSTALLED LIGHTING DEVICES - LUMINOUS INTENSITY VISIBILITY OPTION				
LIGHTING DEVICE	APPLICABLE VEHICLES	CORNER POINTS[1][2]		REQUIRED VISIBILITY Minimum luminous intensity in any direction throughout the pattern defined by the specified corner points. Candela
Turn signal lamp	All, where installed.	15° UP - 45° IB	15° UP - 80° OB	0.3
		15° DOWN - 45° IB	15° DOWN - 80° OB	
Stop lamp	All, where installed.	15° UP - 45° IB	15° UP - 45° OB	0.3
		15° DOWN - 45° IB	15° DOWN - 45° OB	
Taillamp[4]	All, where installed.	15° UP - 45° IB	15° UP - 80° OB	0.05
		15° DOWN - 45° IB	15° DOWN - 80° OB	
Parking lamp	All, where installed.	15° UP - 45° IB	15° UP - 80° OB	0.05
		15° DOWN - 45° IB	15° DOWN - 80° OB	

(1) IB indicates an inboard direction (toward the vehicle's longitudinal centerline) and OB indicates an outboard direction.

(2) Where lamp is mounted less than 750 mm. above the road surface, as measured to the axis of reference, visibility requirements are reduced to 5° down.

(4) Inboard and outboard corner points are 80° for a single taillamp installed on a motorcycle.

TABLE VI: FRONT TURN SIGNAL LAMP PHOTOMETRY REQUIREMENTS

GROUP NUMBER	TEST POINT (degrees)		MINIMUM PHOTOMETRIC INTENSITY RATIO WHERE COMBINED WITH A PARKING LAMP OR CLEARANCE LAMP[4] N.R. – NO REQUIREMENT	BASE REQUIREMENTS						2.5X BASE REQUIREMENTS					
				MINIMUM PHOTOMETRIC INTENSITY[1][2] (cd)			GROUP MINIMUM PHOTOMETRIC INTENSITY (cd)			MINIMUM PHOTOMETRIC INTENSITY[1][2] (cd)			GROUP MINIMUM PHOTOMETRIC INTENSITY (cd)		
				Lighted Sections			Lighted Sections			Lighted Sections			Lighted Sections		
				1	2	3	1	2	3	1	2	3	1	2	3
1	20L	5U	3	25	30	35	130	155	180	62.5	75	87.5	325	387	450
		5D	N.R.	25	30	35				62.5	75	87.5			
	5L	10U	3	40	48	55				100	120	137.5			
		10D[3]	N.R.	40	48	55				100	120	137.5			
2	10L	5U	3	75	88	100	250	295	340	187.5	220	250	625	737	850
		H	3	100	120	140				250	300	350			
		5D	N.R.	75	88	100				187.5	220	250			
3	5U	V	5	175	205	235	950	1130	1295	437.5	512.5	587.5	2375	2825	3237
	H	5L	5	200	240	275				500	600	687.5			
		V	5	200	240	275				500	600	687.5			
		5R	5	200	240	275				500	600	687.5			
	5D	V	N.R.	175	205	235				437.5	512.5	587.5			
4	10R	5U	3	75	88	100	250	295	340	187.5	220	250	625	737	850
		H	3	100	120	140				250	300	350			
		5D	N.R.	75	88	100				187.5	220	250			
5	5R	10U	3	40	48	55	130	155	180	100	120	137.5	325	387	450
		10D[3]	N.R.	40	48	55				100	120	137.5			
	20R	5U	3	25	30	35				62.5	75	87.5			
		5D	N.R.	25	30	35				62.5	75	87.5			

[1] The measured values at each test point must not be less than 60% of the minimum value when considering overall group or zone photometry values.

[2] The photometric intensity values between test points must not be less than the lower specified minimum value of the two closest adjacent test points on a horizontal or vertical line.

[3] Where turn signal lamps are mounted with their axis of reference less than 750 mm. above the road surface photometry requirements below 5° down may be met at 5° down rather than at the required downward angle.

[4] Required only when a combined turn signal lamp and clearance lamp is installed on a vehicle 2032 mm. or more in overall width.

TABLE VI: FRONT TURN SIGNAL LAMP PHOTOMETRY REQUIREMENTS

GROUP NUMBER	TEST POINT (degrees)		MINIMUM PHOTOMETRIC INTENSITY RATIO WHERE COMBINED WITH A PARKING LAMP OR CLEARANCE LAMP[4] N.R. – NO REQUIREMENT	2 X BASE REQUIREMENTS						1.5X BASE REQUIREMENTS					
				MINIMUM PHOTOMETRIC INTENSITY[1][2] (cd)			GROUP MINIMUM PHOTOMETRIC INTENSITY (cd)			MINIMUM PHOTOMETRIC INTENSITY[1][2] (cd)			GROUP MINIMUM PHOTOMETRIC INTENSITY (cd)		
				Lighted Sections			Lighted Sections			Lighted Sections			Lighted Sections		
				1	2	3	1	2	3	1	2	3	1	2	3
1	20L	5U	3	50	60	70	260	310	360	37.5	45	52.5	195	232.5	270
		5D	N.R.	50	60	70				37.5	45	52.5			
	5L	10U	3	80	96	110				60	72	82.5			
		10D[3]	N.R.	80	96	110				60	72	82.5			
2	10L	5U	3	150	176	200	500	590	680	112.5	132	150	375	442.5	510
		H	3	200	240	280				150	180	210			
		5D	N.R.	150	176	200				112.5	132	150			
3	5U	V	5	350	410	470	1900	2260	2590	262.5	307.5	352.5	1425	1695	1942.5
	H	5L	5	400	480	550				300	360	412.5			
		V	5	400	480	550				300	360	412.5			
		5R	5	400	480	550				300	360	412.5			
	5D	V	N.R.	350	410	470				262.5	307.5	352.5			
4	10R	5U	3	150	176	200	500	590	680	112.5	132	150	375	442.5	510
		H	3	200	240	280				150	180	210			
		5D	N.R.	150	176	200				112.5	132	150			
5	5R	10U	3	80	96	110	260	310	360	60	72	82.5	195	232.5	270
		10D[3]	N.R.	80	96	110				60	72	82.5			
	20R	5U	3	50	60	70				37.5	45	52.5			
		5D	N.R.	50	60	70				37.5	45	52.5			

[1] The measured values at each test point must not be less than 60% of the minimum value when considering overall group or zone photometry values.

[2] The photometric intensity values between test points must not be less than the lower specified minimum value of the two closest adjacent test points on a horizontal or vertical line.

[3] Where turn signal lamps are mounted with their axis of reference less than 750 mm. above the road surface photometry requirements below 5° down may be met at 5° down rather than at the specified required downward angle.

[4] Required only when a combined turn signal lamp and clearance lamp is installed on a vehicle 2032 mm. or more in overall width.

TABLE VII: REAR TURN SIGNAL LAMP PHOTOMETRY REQUIREMENTS[5]

GROUP NUMBER	TEST POINT[6] (degrees)		MINIMUM PHOTOMETRIC INTENSITY RATIO WHERE COMBINED WITH A TAIL LAMP OR CLEARANCE LAMP[7][8]	MINIMUM PHOTOMETRIC INTENSITY[1][2] (cd) RED LAMPS			GROUP MINIMUM PHOTOMETRIC INTENSITY (cd) RED LAMPS			MINIMUM PHOTOMETRIC INTENSITY[1][2] (cd) AMBER LAMPS			GROUP MINIMUM PHOTOMETRIC INTENSITY (cd) AMBER LAMPS		
				Lighted Sections			Lighted Sections			Lighted Sections			Lighted Sections		
				1	2	3	1	2	3	1	2	3	1	2	3
1	20L	5U	3	10	12	15	50	60	70	15	20	25	80/84	100	120
		5D	3	10	12	15				15	20	25			
	5L	10U	3	16	19	22				26/27	30	35			
		10D[3]	3	16	19	22				26/27	30	35			
2	10L	5U	3	30	35	40	100	115	135	50	55	65	165	185	220
		H	3	40	47	55				65	75	90			
		5D	3	30	35	40				50	55	65			
3	5U	V	5	70	82	95	380	445	520	110	130	150	610/590	710	825
	H	5L	5	80	95	110				130/120	150	175			
		V	5	80	95	110				130	150	175			
		5R	5	80	95	110				130/120	150	175			
	5D	V	3	70	82	95				110	130	150			
4	10R	5U	3	30	35	40	100	115	135	50	55	65	165	185	220
		H	3	40	47	55				65	75	90			
		5D	3	30	35	40				50	55	65			
5	5R	10U	3	16	19	22	50	60	70	26/27	30	35	80/84	100	120
		10D[3]	3	16	19	22				26/27	30	35			
	20R	5U	3	10	12	15				15	20	25			
		5D	3	10	12	15				15	20	25			
MAXIMUM PHOTOMETRIC INTENSITY[4]				300	360	420				750	900	900			

(1) The measured values at each test point must not be less than 60% of the minimum value.

(2) The photometric intensity values between test points must not be less than the lower specified minimum value of the two closest adjacent test points on a horizontal or vertical line.

(3) Where turn signal lamps are mounted with their axis of reference less than 750 mm. above the road surface photometry requirements below 5° down may be met at 5° down rather than at the required downward angle.

(4) The maximum photometric intensity must not occur over any area larger than that generated by a 0.5° radius within a solid angle defined by the test point range

(5) Values preceded by a slash (/) apply only to multipurpose passenger vehicles, trucks, trailers, and buses of 2032 mm. or more in overall width.

(6) A double faced turn signal meeting the requirements of SAE J588e, *Turn Signal Lamps,* September 1970 installed on a truck tractor need only meet the photometric requirements to the left of the V-V axis for a left hand lamp and to the right of the V-V axis for a right hand lamp.

(7) Required only when combined turn signal lamp and clearance lamp is installed on a vehicle 2032 mm. or more in overall width.

(8) When a taillamp (or clearance lamp on a vehicle 2032 mm. or more in overall width) is combined with a rear turn signal lamp and the maximum luminous intensity of the taillamp (or clearance lamp) is located below horizontal and within an area generated by a 0.5° radius around a test point (1.0° radius on lamps installed on vehicle 2032 or more in overall width), the ratio for the test point may be computed by using the lowest value of the taillamp (or clearance lamp) luminous intensity within the generated area.

TABLE VIII: TAILLAMP PHOTOMETRY REQUIREMENTS

GROUP NUMBER	TEST POINT (degrees)		MINIMUM/MAXIMUM PHOTOMETRIC INTENSITY[1][2] (cd) N.R.-NO REQUIREMENT			GROUP MINIMUM PHOTOMETRIC INTENSITY[1][2] (cd)		
			Lighted Sections			Lighted Sections		
			1	2	3	1	2	3
1	20L	5U	0.3/18	0.5/20	0.7/25	1.4	2.4	3.5
		5D	0.3/N.R.	0.5/N.R.	0.7/N.R.			
	5L	10U	0.4/18	0.7/20	1.0/25			
		10D[3]	0.4/N.R.	0.7/N.R.	2.0/N.R.			
2	10L	5U	0.8/18	1.4/20	2.0/25	2.4	4.2	6.0
		H	0.8/18	1.4/20	2.0/25			
		5D	0.8/N.R.	1.4/N.R.	2.0/N.R.			
3	5U	V	1.8/18	3.1/20	4.5/25	9.6	16.8	24.0
	H	5L	2.0/18	3.5/20	5.0/25			
		V	2.0/18	3.5/20	5.0/25			
		5R	2.0/18	3.5/20	5.0/25			
	5D	V	1.8/N.R.	3.1/N.R.	4.5/N.R.			
4	10R	5U	0.8/18	1.4/20	2.0/25	2.4	4.2	6.0
		H	0.8/18	1.4/20	2.0/25			
		5D	0.8/N.R.	1.4/N.R.	2.0/N.R.			
5	5R	10U	0.4/18	0.7/20	1.0/25	1.4	2.4	3.5
		10D[3]	0.4/N.R.	0.7/N.R.	2.0/N.R.			
	20R	5U	0.3/18	0.5/20	0.7/25			
		5D	0.3/N.R.	0.5/N.R.	0.7/N.R.			

[1] The photometric intensity values between test points must not be less than the lower specified minimum value of the two closest adjacent test points on a horizontal or vertical line.

[2] If the sum of intensity values for all points in the zone is not less than the specified total value for the zone, the measured intensity value for each individual test point is not required to meet the minimum value.

[3] Where taillamps are mounted with their axis of reference less than 750 mm. above the road surface photometry requirements below 5° down may be met at 5° down rather than at the required downward angle.

TABLE IX: STOP LAMP PHOTOMETRY REQUIREMENTS

GROUP NUMBER	TEST POINT (degrees)		MINIMUM PHOTOMETRIC INTENSITY RATIO WHERE COMBINED WITH A TAIL LAMP[7]	MINIMUM PHOTOMETRIC INTENSITY[1][2] (cd)			GROUP MINIMUM PHOTOMETRIC INTENSITY (cd)			GROUP MINIMUM PHOTOMETRIC INTENSITY (cd) (Applies to motor-driven cycle only)[5]		
				Lighted Sections			Lighted Sections			Lighted Sections		
				1	2	3	1	2	3	1	2	3
1	20L	5U	3	10	12	15	50	60	70	26	31	36
		5D	3	10	12	15						
	5L	10U	3	16	19	22						
		10D[4]	3	16	19	22						
2	10L	5U	3	30	35	40	100	115	135	50	59	69
		H	3	40	47	55						
		5D	3	30	35	40						
3	5U	V	5	70	82	95	380	445	445	190	226	261
	H	5L	3/5[6]	80	95	110						
		V	5	80	95	110						
		5R	5	80	95	110						
	5D	V	3	70	82	95						
4	10R	5U	3	30	35	40	100	115	135	50	59	69
		H	3	40	47	55						
		5D	3	30	35	40						
5	5R	10U	3	16	19	22	50	60	70	26	31	36
		10D[4]	3	16	19	22						
	20R	5U	3	10	12	15						
		5D	3	10	12	15						
MAXIMUM PHOTOMETRIC INTENSITY[3]				300	360	420						

[1] The measured values at each test point must not be less than 60% of the minimum value.

[2] The photometric intensity values between test points must not be less than the lower specified minimum value of the two closest adjacent test points on a horizontal or vertical line.

[3] The maximum photometric intensity must not occur over any area larger than that generated by a 0.5° radius within a solid angle defined by the test point range

[4] Where stop lamps are mounted with their axis of reference less than 750 mm. above the road surface photometry requirements below 5° down may be met at 5° down rather than at the required downward angle.

[5] Stop lamp group minimum photometry requirements for a motor-driven cycle whose speed attainable in 1 mile is 30 mph or less.

[6] Values preceded by a slash (/) apply only to lamps installed on multipurpose passenger vehicles, trucks, trailers, and buses of 2032 mm. or more in overall width.

[7] When a taillamp is combined with a stop lamp and the maximum luminous intensity of the taillamp is located below horizontal and within an area generated by a 0.5° radius around a test point (1.0° radius on lamps installed on vehicle 2032 or more in overall width), the ratio for the test point may be computed by using the lowest value of the taillamp luminous intensity within the generated area.

TABLE X: SIDE MARKER LAMP PHOTOMETRY REQUIREMENTS			
TEST POINT (degrees)		MINIMUM PHOTOMETRIC INTENSITY (cd)[2] RED LAMPS	MINIMUM PHOTOMETRIC INTENSITY (cd)[2] AMBER LAMPS
10U	45L[1]	0.25	0.62
	V	0.25	0.62
	45R[1]	0.25	0.62
H	45L[1]	0.25	0.62
	V	0.25	0.62
	45R[1]	0.25	0.62
10D[3]	45L[1]	0.25	0.62
	V	0.25	0.62
	45R[1]	0.25	0.62

[1] Where a side marker lamp installed on a motor vehicle less than 30 feet in overall length has the lateral angle nearest the other required side marker lamp on the same side of the vehicle reduced from 45° by design as specified by S7.4.1.1, the photometric intensity measurement may be met at the lesser angle.

[2] The photometric intensity values between test points must not be less than the lower specified minimum value of the two closest adjacent test points on a horizontal or vertical line.

[3] Where side marker lamps are mounted with their axis of reference less than 750 mm. above the road surface, photometry requirements below 5° down may be met at 5° down rather than at the specified required downward angle.

TABLE XI: CLEARANCE AND IDENTIFICATION LAMPS PHOTOMETRY REQUIREMENTS

TEST POINT (degrees)		MINIMUM PHOTOMETRIC INTENSITY (cd)[2] RED LAMPS	MINIMUM PHOTOMETRIC INTENSITY (cd)[2] AMBER LAMPS
10U	45L[4]	0.25	0.62
	V	0.25	0.62
	45R[4]	0.25	0.62
H	45L[4]	0.25	0.62
	V	0.25	0.62
	45R[4]	0.25	0.62
10D[1]	45L[4]	0.25	0.62
	V	0.25	0.62
	45R[4]	0.25	0.62
MAXIMUM PHOTOMETRIC INTENSITY[3] (cd) RED LAMPS		15	

[1] Where clearance lamps or identification lamps are mounted with their axis of reference less than 750mm. above the road surface, photometry requirements below 5° down may be met at 5° down rather than at the specified required downward angle.

[2] The photometric intensity values between test points must not be less than the lower specified minimum value of the two closest adjacent test points on a horizontal or vertical line.

[3] When optically combined with a stop lamp, this maximum applies on or above the horizontal.

[4] Where clearance lamps are installed at locations other than on the front and rear due to the necessity to indicate the overall width of the vehicle, or for protection from damage during normal operation of the vehicle, they need not meet the photometric intensity requirement at any test point that is 45° inboard.

TABLE XII: BACKUP LAMP PHOTOMETRY REQUIREMENTS

GROUP NUMBER	TEST POINT (degrees)		MAXIMUM PHOTOMETRIC INTENSITY (cd) ANY SINGLE LAMP N.R. – No requirement	TWO LAMP SYSTEMS[2][3]		SINGLE LAMP SYSTEM	
				MINIMUM PHOTOMETRIC INTENSITY (cd)[1][4]	GROUP MINIMUM PHOTOMETRIC INTENSITY (cd)	MINIMUM PHOTOMETRIC INTENSITY (cd)[1][4]	GROUP MINIMUM PHOTOMETRIC INTENSITY (cd)
1	45L	5U	300	15	45	30	90
		H	300	15		30	
		5D	N.R.	15		30	
2	30L	H	300	25	50	50	100
		5D	N.R.	25		50	
3	10L	10U	300	10	100	20	200
		5U	300	20		40	
	V	10U	300	15		30	
		5U	300	25		50	
	10R	10U	300	10		20	
		5U	300	20		40	
4	10L	H	300	50	360	100	720
		5D	N.R.	50		100	
	V	H	300	80		160	
		5D	N.R.	80		160	
	10R	H	300	50		100	
		5D	N.R.	50		100	
5	30R	H	300	25	50	50	100
		5D	N.R.	25		50	
6	45R	5U	300	15	45	30	90
		H	300	15		30	
		5D	N.R.	15		30	

(1) The photometric intensity values between test points must not be less than the lower specified minimum value of the two closest adjacent test points on a horizontal or vertical line.

(2) When two lamps of the same or symmetrically opposite design are used, the tested photometric values along the vertical axis and the averages of the tested photometric values for the same horizontal test point left and right of vertical for one lamp must be used to determine compliance with the requirements.

(3) When two lamps of differing designs are used, they must be tested individually and the tested photometric values added to determine the combined units compliance with twice the stated requirements.

(4) If the sum of intensity values for all points in the zone is not less than the specified total value for the zone, the measured intensity value for each individual test point is not required to meet the minimum value.

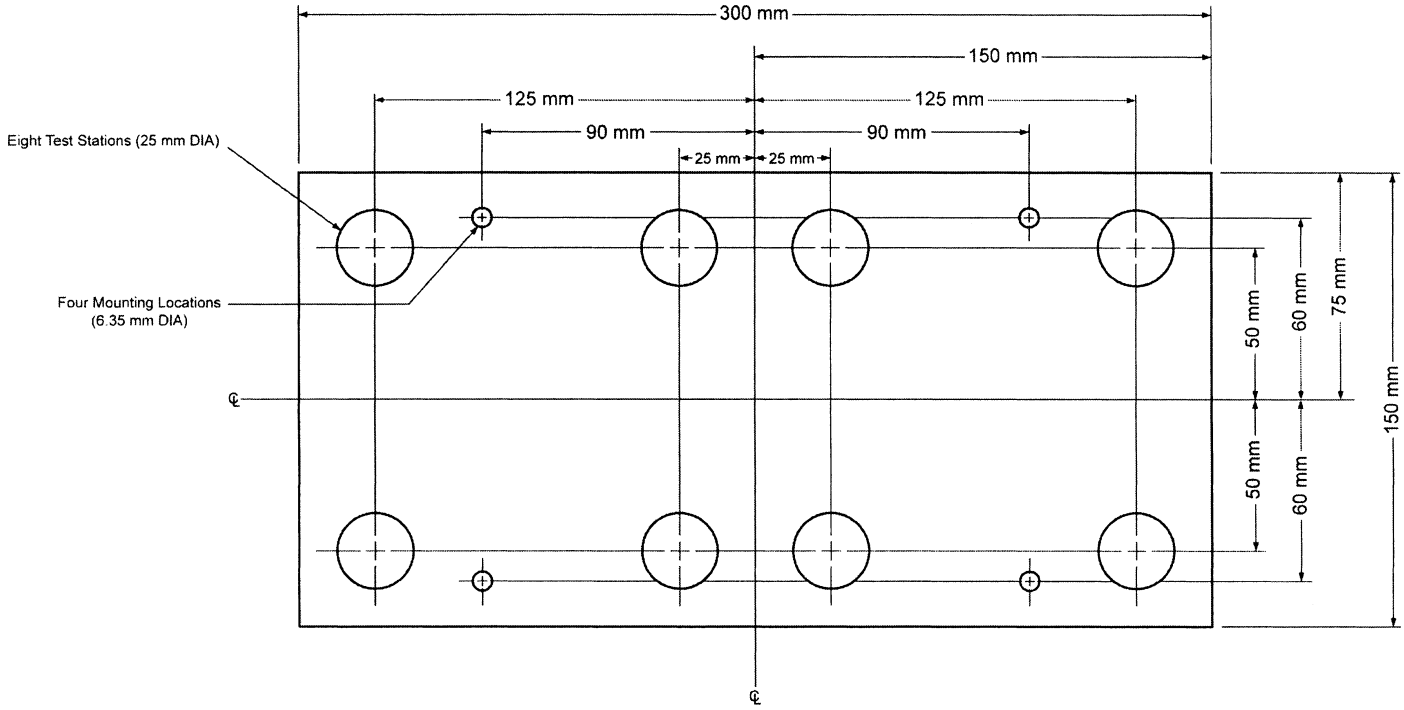

Test Plate for Vehicles other than Motorcycles and Motor Driven Cycles

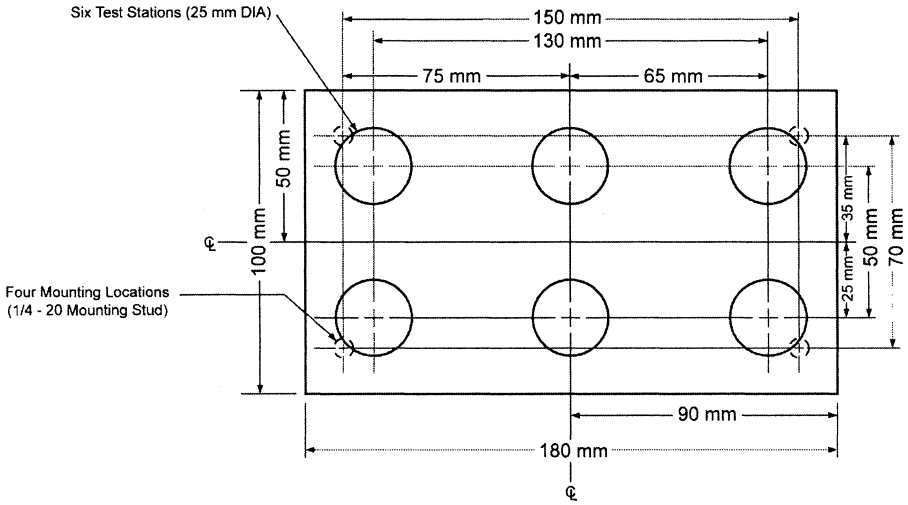

Test Plate for Motorcycles and Motor Driven Cycles

LICENSE PLATE LAMP TARGET LOCATIONS

TABLE XIII

TABLE XIV: PARKING LAMP PHOTOMETRY REQUIREMENTS

GROUP NUMBER	TEST POINT (degrees)		MINIMUM PHOTOMETRIC INTENSITY[1][2] (cd)	MAXIMUM PHOTOMETRIC INTENSITY (cd)	GROUP MINIMUM PHOTOMETRIC INTENSITY (cd)
1	20L	5U	0.4	125	2.4
		5D	0.4	250	
	5L	10U	0.8	125	
		10D[3]	0.8	250	
2	10L	5U	0.8	125	3.0
		H	1.4	125	
		5D	0.8	250	
3	5U	V	2.8	125	16.8
	H	5L	3.6	125	
		V	4.0	125	
		5R	3.6	125	
	5D	V	2.8	250	
4	10R	5U	0.8	125	3.0
		H	1.4	125	
		5D	0.8	250	
5	5R	10U	0.8	125	2.4
		10D[3]	0.8	250	
	20R	5U	0.4	125	
		5D	0.4	250	

[1] The photometric intensity values between test points must not be less than the lower specified minimum value of the two closest adjacent test points on a horizontal or vertical line.

[2] If the sum of intensity values for all points in the zone is not less than the specified total value for the zone, the measured intensity value for each individual test point is not required to meet the minimum value.

[3] Where parking lamps are mounted with their axis of reference less than 750 mm. above the road surface photometry requirements below 5° down may be met at 5° down rather than at the required downward angle.

TABLE XV: HIGH-MOUNTED STOP LAMP PHOTOMETRY REQUIREMENTS

GROUP NUMBER	TEST POINT (degrees)		MINIMUM PHOTOMETRIC INTENSITY[1][2][3] (cd)	GROUP MINIMUM PHOTOMETRIC INTENSITY[3] (cd)
1	5U	V	25	125
	H	5L	25	
	H	V	25	
	H	5R	25	
	5D	V	25	
2	5U	5R	25	98
	5U	10R	16	
	H	10R	16	
	5D	10R	16	
	5D	5R	25	
3	5U	5L	25	98
	5U	10L	16	
	H	10L	16	
	5D	10L	16	
	5D	5L	25	
4	10U	10L	8	32
	10U	V	16	
	10U	10R	8	
MAXIMUM PHOTOMETRIC INTENSITY[4]			160	

[1] The photometric intensity values between test points must not be less than the lower specified minimum value of the two closest adjacent test points on a horizontal or vertical line.

[2] The photometric intensity at each test point must not be less than 60% of the specified minimum value when considering overall group or zone photometry values.

[3] Where a pair of lamps identical in size and shape are used due to vehicle construction, they together must meet photometric requirements.

[4] The maximum photometric intensity must not occur over any area larger than that generated by a 0.25° radius within a solid cone angle within the rectangle bounded by test points 10U-10L, 10U-10R, 5D-10L, and 5D-10R.

TABLE XVI: REFLEX REFLECTOR PHOTOMETRY REQUIREMENTS

OBSERVATION ANGLE (degrees)	ENTRANCE ANGLE (degrees)	MINIMUM PERFORMANCE					
		RED REFLECTORS		AMBER REFLECTORS		WHITE REFLECTORS	
		(cd/incident ft-c)	(mcd/lux)	(cd/incident ft-c)	(mcd/lux)	(cd/incident ft-c)	(mcd/lux)
0.2	0	4.5	420	11.25	1050	18	1680
	10U	3.0	280	7.5	700	12	1120
	10D(1)	3.0	280	7.5	700	12	1120
	20L	1.5	140	3.75	350	6	560
	20R	1.5	140	3.75	350	6	560
1.5	0	0.07	6	0.175	15	0.28	24
	10U	0.05	5	0.125	12.5	0.2	20
	10D(1)	0.05	5	0.125	12.5	0.2	20
	20L	0.03	3	0.075	7.5	0.12	12
	20R	0.03	3	0.075	7.5	0.12	12

(1) Where reflex reflectors are mounted with their axis of reference less than 750 mm. above the road surface, photometry requirements below 5° down may be met at 5° down rather than at the required specified downward angle.

TABLE XVI: ADDITIONAL PHOTOMETRY REQUIREMENTS FOR CONSPICUITY REFLEX REFLECTORS

OBSERVATION ANGLE (degrees)	ENTRANCE ANGLE (degrees)	MINIMUM PERFORMANCE		
		RED (mcd/lux)	WHITE HORIZONTAL ORIENTATION (mcd/lux)	WHITE VERTICAL ORIENTATION (mcd/lux)
0.2	0	300	1250	1680
	20L TO 20 R			560
	30L TO 30 R	300	1250	
	45L TO 45R	75	300	
	10U TO 10D			1120

TABLE XVI: RETROREFLECTIVE SHEETING PHOTOMETRY REQUIREMENTS

OBSERVATION ANGLE (degrees)	ENTRANCE ANGLE (degrees)	MINIMUM PERFORMANCE					
		GRADE DOT-C2		GRADE DOT-C3		GRADE DOT-C4	
		WHITE	RED	WHITE	RED	WHITE	RED
		(cd/lux/sq.m.)	(cd/lux/sq.m.)	(cd/lux/sq.m.)	(cd/lux/sq.m.)	(cd/lux/sq.m.)	(cd/lux/sq.m.)
0.2	-4	250	60	165	40	125	30
	30	250	60	165	40	125	30
	45	60	15	40	10	30	8
0.5	-4	65	15	43	10	33	8
	30	65	15	43	10	33	8
	45	15	4	10	3	8	2

TABLE XVII: SCHOOL BUS SIGNAL LAMP PHOTOMETRY REQUIREMENTS

TEST POINT (degrees)		MINIMUM PHOTOMETRIC INTENSITY (cd)[2] RED LAMPS	MINIMUM PHOTOMETRIC INTENSITY (cd) AMBER LAMPS
5U	20L	150	375
	10L	300	750
	5L	300	750
	V	300	750
	5R	300	750
	10R	300	750
	20R	150	375
H	30L	30	75
	20L	180	450
	10L	400	1000
	5L	500	1250
	V	600	1500
	5R	500	1250
	10R	400	1000
	20R	180	450
	30R	30	75
5D	30L	30	75
	20L	200	500
	10L	300	750
	5L	450	1125
	V	450	1125
	5R	450	1125
	10R	300	750
	20R	200	500
	30R	30	75
10D[1]	5L	40	100
	V	40	100
	5R	40	100

[1] Where school bus signal lamps are mounted with their axis of reference less than 750 mm. above the road surface, photometry requirements below 5° down may be met at 5° down rather than at the specified required downward angle.

[2] The photometric intensity values between test points must not be less than the lower specified minimum value of the two closest adjacent test points on a horizontal or vertical line.

TABLE XVIII. HEADLAMP UPPER BEAM PHOTOMETRY REQUIREMENTS

TEST POINT (degrees)		UPPER BEAM #1 (UB1)		UPPER BEAM #2 (UB2)		UPPER BEAM #3 (UB3)	
		MAXIMUM PHOTOMETRIC INTENSITY (cd)	MINIMUM PHOTOMETRIC INTENSITY (cd)	MAXIMUM PHOTOMETRIC INTENSITY (cd)	MINIMUM PHOTOMETRIC INTENSITY (cd)	MAXIMUM PHOTOMETRIC INTENSITY (cd)	MINIMUM PHOTOMETRIC INTENSITY (cd)
2U	V		1,500		1,500		1,000
1U	3L &3R		5,000		5,000		2,000
H	V	70,000	40,000	75,000	40,000	75,000	20,000
H	3L & 3R		15,000		15,000		10,000
H	6L & 6R		5,000		5,000		3,250
H	9L & 9R		3,000		3,000		1,500
H	12L & 12R		1,500		1,500		750
1.5D	V		5,000		5,000		5,000
1.5D	9L & 9R		2,000		2,000		1,500
2.5D	V		2,500		2,500		2,500
2.5D	12L & 12R		1,000		1,000		750
4D	V	5,000		12,000		5,000	
		UPPER BEAM #4 (UB4)		UPPER BEAM #5 (UB5)		UPPER BEAM #6 (UB6)	
2U	V		750		750		1,500
1U	3L &3R		3,000		2,000		5,000
H	V	60,000	18,000	15,000	7,000	70,000	40,000
H	3L & 3R		12,000		3,000		15,000
H	6L & 6R		3,000		2,000		5,000
H	9L & 9R		2,000		1,000		3,000
H	12L & 12R		750		750		1,500
1.5D	V		3,000		2,000		5,000
1.5D	9L & 9R		1,250		750		1,000
2.5D	V		1,500		1,000		
2.5D	12L & 12R		600		400		
4D	V	5,000		2,500		5,000	

TABLE XIX. HEADLAMP LOWER BEAM PHOTOMETRY REQUIREMENTS

TEST POINT (degrees)		LOWER BEAM # 1M (LB1M)		LOWER BEAM # 1V (LB1V)		LOWER BEAM # 2M (LB2M)		LOWER BEAM # 2V (LB2V)	
		MAXIMUM PHOTOMETRIC INTENSITY (cd)	MINIMUM PHOTOMETRIC INTENSITY (cd)	MAXIMUM PHOTOMETRIC INTENSITY (cd)	MINIMUM PHOTOMETRIC INTENSITY (cd)	MAXIMUM PHOTOMETRIC INTENSITY (cd)	MINIMUM PHOTOMETRIC INTENSITY (cd)	MAXIMUM PHOTOMETRIC INTENSITY (cd)	MINIMUM PHOTOMETRIC INTENSITY (cd)
(1) 10U to 90U	(1) 90L to 90R	125		125		125		125	
4U	8L & 8R		64		64		64		64
2U	4L		135		135		135		135
1.5U	1R to 3R		200		200		200		200
1.5U	1R to R	1,400		1,400		1,400		1,400	
1U	1.5L to L	700		700		700		700	
0.5U	1.5L to L	1,000		1,000		1,000		1,000	
0.5U	1R to 3R	2,700	500	2,700	500	2,700	500	2,700	500
H	V	5,000		5,000					
H	4L		135		135		135		135
H	8L		64		64		64		64
0.5D	1.5L to L	3,000				3,000			
0.5D	1.5R	20,000	10,000			20,000	10,000		
0.6D	1.3R				10,000				10,000
0.86D	V				4,500				4,500
0.86D	3.5L			12,000	1,800			12,000	1,800
1D	6L		1,000				1,000		
1.5D	2R		15,000		15,000		15,000		15,000
1.5D	9L & 9R		1,000				1,000		
2D	9L & 9R				1,250				1,250
2D	15L & 15R		850		1,000		850		1,000
2.5D	V								
2.5D	12L & 12R								
4D	V	7,000		10,000					
4D	4R	12,500		12,500		12,500		12,500	
4D	20L & 20R				300				300

(1) These test points are boundaries, all test points that fall into the area defined by these points must meet the listed photometry requirement.

TABLE XIX. HEADLAMP LOWER BEAM PHOTOMETRY REQUIREMENTS

TEST POINT (degrees)		LOWER BEAM #3 M (LB3M)		LOWER BEAM # 3V (LB3V)		LOWER BEAM # 4M (LB4M)		LOWER BEAM # 5M (LB5M)	
		MAXIMUM PHOTOMETRIC INTENSITY (cd)	MINIMUM PHOTOMETRIC INTENSITY (cd)	MAXIMUM PHOTOMETRIC INTENSITY (cd)	MINIMUM PHOTOMETRIC INTENSITY (cd)	MAXIMUM PHOTOMETRIC INTENSITY (cd)	MINIMUM PHOTOMETRIC INTENSITY (cd)	MAXIMUM PHOTOMETRIC INTENSITY (cd)	MINIMUM PHOTOMETRIC INTENSITY (cd)
(1) 10U to 90U	(1) 90L to 90R	125		125		125		125	
4U	8L & 8R		64		64		64		64
2U	4L		135		135		135		135
1.5U	1R to 3R		200		200		200		200
1.5U	1R to R	1,400		1,400		1,400		1,400	
1U	1.5L to L	700		700		700		700	
0.5U	1.5L to L	1,000		1,000		1,000		1,000	
0.5U	1R to 3R	2,700	500	2,700	500	2,700	500	2,700	500
H	V							5,000	
H	4L		135		135		135		135
H	8L		64		64		64		64
0.5D	1.5L to L	2,500						3,000	
0.5D	1.5R	20,000	8,000			20,000	8,000	20,000	10,000
0.6D	1.3R				10,000				
0.86D	V				4,500				
0.86D	3.5L			12,000	1,800				
1D	6L		750				750		1,000
1.5D	2R		15,000		15,000		15,000		15,000
1.5D	9L & 9R		750				750		1,000
2D	9L & 9R				1,250				
2D	15L & 15R		700		1,000		700		850
2.5D	V								2,500
2.5D	12L & 12R								1,000
4D	V							7,000	
4D	4R	12,500		12,500		12,500		12,500	
4D	20L & 20R				300				

(1) These test points are boundaries, all test points that fall into the area defined by these points must meet the listed photometry requirement.

TABLE XIX. HEADLAMP LOWER BEAM PHOTOMETRY REQUIREMENTS			
TEST POINT (degrees)		LOWER BEAM # 4 V (LB4V)	
		MAXIMUM PHOTOMETRIC INTENSITY (cd)	MINIMUM PHOTOMETRIC INTENSITY (cd)
(1) 10U to 90U	(1) 90L to 90R	125	
4U	8L & 8R		64
2U	4L		135
1.5U	1R to 3R		200
1.5U	1R to R	1,400	
1U	1.5L to L	700	
0.5U	1.5L to L	1,000	
0.5U	1R to 3R	2,700	500
H	V	5,000	
H	4L		135
H	8L		64
0.5D	1.5L to L		
0.5D	1.5R		
0.6D	1.3R		10,000
0.86D	V		4,500
0.86D	3.5L	12,000	1,800
1D	6L		
1.5D	2R		15,000
1.5D	9L & 9R		
2D	9L & 9R		1,250
2D	15L & 15R		1,000
2.5D	V		2,500
2.5D	12L & 12R		1,000
4D	V	10,000	
4D	4R	12,500	
4D	20L & 20R		300

(1) These test points are boundaries, all test points that fall into the area defined by these points must meet the listed photometry requirement.

TABLE XX. MOTORCYCLE AND MOTOR DRIVEN CYCLE HEADLAMP PHOTOMETRY REQUIREMENTS

TEST POINT (degrees)		MOTORCYCLE		MOTOR DRIVEN CYCLE		MOTOR DRIVEN CYCLE with Single Lamp System	
		MAXIMUM PHOTOMETRIC INTENSITY (cd)	MINIMUM PHOTOMETRIC INTENSITY (cd)	MAXIMUM PHOTOMETRIC INTENSITY (cd)	MINIMUM PHOTOMETRIC INTENSITY (cd)	MAXIMUM PHOTOMETRIC INTENSITY (cd)	MINIMUM PHOTOMETRIC INTENSITY (cd)
LOWER BEAM							
1.5U	1R to R	1,400		1,400			
1.5U	1R to 3R					1,400	
1U	1.5L to L	700		700		700	
0.5U	1.5L to L	1,000		1,000		1,000	
0.5U	1R to 3R	2,700		2,700		2,700	
1.5D	9L and 9R		700				
2D	V		7,000		5,000		4,000
2D	3L and 3R		4,000		3,000		3,000
2D	6L and 6R		1,500		1,500		1,500
2D	12L and 12R		700				
3D	6L and 6R		800		800		
4D	V		2,000		2,000		1,000
4D	4R	12,500		12,500			12,500
UPPER BEAM							
2U	V		1,000				
1U	3L and 3R		2,000		2,000		
H	V		12,500		10,000		
0.5D	V		20,000		20,000		
0.5D	3L and 3R		10,000		5,000		
0.5D	6L and 6R		3,300		2,000		
0.5D	9L and 9R		1,500				
0.5D	12L and 12R		800				
1D	V		17,500		15,000		
2D	V		5,000		5,000		
3D	V		2,500		2,500		
3D	6L and 6R				800		
3D	9L and 9R		1,500				
3D	12L and 12R		300				
4D	V		1,500				
4D	V	7,500		7,500			
ANYWHERE IN BEAM		75,000		75,000			

TABLE XXI. ASSOCIATED EQUIPMENT PHYSICAL TEST REQUIREMENTS

APPLICABLE ITEM	TEST	PROCEDURE	PERFORMANCE REQUIREMENTS
Turn signal operating unit (If stop signals also operate through the turn signal operating unit, the voltage drop of any additional switch contacts must meet the same requirements as the turn signal contacts)	Durability test	The sample unit is operated with the maximum bulb load it will experience on the vehicle on which it will be installed. Bulbs that fail during the test are replaced. The turn signal flasher is not to be included in the test circuit. When the unit includes a self-canceling means, the test equipment is arranged so that the unit will be turned "off" in its normal operating manner. The test is conducted at a rate not to exceed 15 complete cycles per minute. One complete cycle consists of the following sequence: off, left turn, off, right turn, and return to off. During the test the unit is operated at 12.8 volts from a power supply meeting the following requirements: an output current that is at least 10 times the load current, voltage regulation that allows a voltage change of less than 5%, ripple voltage of less than 5%, a response time of not more than 25 milliseconds rise time from 0 to rated current at rated voltage in a pure resistance circuit, and an output impedance of not more than 0.005 ohms dc. The voltage drop from the input terminal of the device to each lamp output terminal, including 3 in. of 16 or 18 gage wire, is measured at the start of the test, at intervals of not more than 25,000 cycles during the test, and at the completion of the test.	A turn signal operating unit is considered to have met the requirements of the durability test if it remains operational after completing at least 100,000 cycles (175,000 cycles for a unit installed on a multipurpose passenger vehicle, truck, or bus 2032 mm. or more in overall width) and the voltage drop between the input contact and any output contact, including required length of wire, does not exceed 0.25 volts.
Vehicular hazard warning signal operating unit	Durability test	The sample unit is operated at its rated voltage with the maximum bulb load it will experience on the vehicle on which it will be installed. Bulbs that fail during the test are replaced. The hazard warning signal flasher is not to be included in the test circuit. The unit is turned "on" and "off" in its normal operating manner at a rate not to exceed 15 complete cycles per minute. One complete cycle consists of the sequence: off, on, and return to off. The voltage drop from the input terminal of the device to each lamp output terminal, including 3 in. of 16 or 18 gage wire, is measured at the start of the test and at the completion of the test. The test consists of 10,000 cycles at an ambient temperature of 75°±10° F followed by 1 hour constant "on" at the same temperature.	A hazard warning signal operating unit is considered to have met the requirements of the durability test if it remains operational after completing 10,000 cycles and the 1 hour constant "on" and the voltage drop between the input contact and any output contact, including required length of wire, does not exceed 0.3 volts both at the start and completion of the test.

TABLE XXI. ASSOCIATED EQUIPMENT PHYSICAL TEST REQUIREMENTS

APPLICABLE ITEM	TEST	PROCEDURE	PERFORMANCE REQUIREMENTS
Turn signal flasher (The standardized test circuit of SAE J823b, *Flasher Test Equipment,* April 1968 is used for turn signal flasher tests)	Starting time test (Variable load flashers are tested with their minimum and their maximum design load connected.)	Twenty sample flashers chosen from random from fifty representative samples are subjected to a starting time test using the standardized test circuit. The test is conducted in an ambient temperature of 75°±10° F with the design load connected and the power source for the test circuit adjusted to apply design voltage at the bulbs. The time measurement starts when the voltage is initially applied. Compliance is based on an average of three starts for each sample separated by a cooling interval of 5 minutes.	The requirements of the starting time test are considered to have been met if 17 of 20 samples comply with the following: A flasher having normally closed contacts must open (turn off) within 1.0 sec. for a device designed to operate two signal lamps, or within 1.25 sec. for a device designed to operate more than two lamps. A flasher having normally open contacts must complete the first cycle (close the contacts and then open the contacts) within 1.5 sec.
	Voltage drop test	The same twenty sample flashers used in the starting time test are subjected to a voltage drop test using the standardized test circuit. The test is conducted at an ambient temperature of 75°±10° F with the maximum design load connected and the power source for the test circuit adjusted to apply 12.8 volts at the bulb. The voltage drop is measured between the input and load terminals of the flasher during the "on" period after the flashers have completed at least five consecutive cycles.	The requirements of the voltage drop test are considered to have been met if 17 of 20 samples comply with the following: The lowest voltage drop across any flasher must not exceed 0.80 volt.

TABLE XXI. ASSOCIATED EQUIPMENT PHYSICAL TEST REQUIREMENTS

APPLICABLE ITEM	TEST	PROCEDURE	PERFORMANCE REQUIREMENTS
Turn signal flasher (The standardized test circuit of SAE J823b, *Flasher Test Equipment,* April 1968 is used for turn signal flasher tests)	Flash rate and percent current "on" time test (Variable load flashers are tested with their minimum and their maximum design load connected.)	The same twenty sample flashers used in the voltage drop test are subjected to a flash rate and percent of current "on" time test using the standardized test circuit with the design load connected and design voltage applied to the bulbs. Compliance is determined using the following combinations of ambient temperature and bulb voltage: 12.8 volts and 75°±10° F 12.0 volts and 0°±5° F 15.0 volts and 0°±5° F 11.0 volts and 125°±5° F 14.0 volts and 125°±5° F Flash rate and percent current "on" time are measured after the flashers have completed five consecutive cycles and are determined by an average of at least three consecutive cycles.	The requirements of the flash rate and percent current "on" time test are considered to have been met if 17 of 20 samples comply with the following: The performance of a normally closed type flasher must be within the unshaded portion of the polygon shown in Figure 2. The performance of a normally open type flasher must be within the entire rectangle including the shaded areas shown in Figure 2.
	Durability test	Twenty sample flashers chosen from random from the thirty samples not used in the previous tests are subjected to a durability test using the standardized test circuit. Conformance of the samples to the starting time, voltage drop, and flash rate and percent of current "on" time tests (limited to the 12.8 volts and 75°±10° F test condition only) is established. The test is conducted on each sample with the maximum design load connected and 14 volts applied to the input terminals of the standardized test circuit. The test cycle consists of 15 sec. on followed by 15 sec. off for a total time of 200 hours in an ambient temperature of 75°±10° F.	The requirements of the durability test are considered to have been met if after completion 17 of 20 samples comply with the performance requirements of the starting time, voltage drop, and flash rate and percent of current "on" time tests (limited to the 12.8 volts and 75°±10° F test condition only) when tested in the standard test circuit with design load and 12.8 volts applied to the bulbs.

TABLE XXI. ASSOCIATED EQUIPMENT PHYSICAL TEST REQUIREMENTS

APPLICABLE ITEM	TEST	PROCEDURE	PERFORMANCE REQUIREMENTS
Vehicular hazard warning signal flasher (The standardized test circuit of SAE J823b, *Flasher Test Equipment,* April 1968 is used for hazard warning signal flasher tests)	Starting time test	Twenty sample flashers chosen from random from fifty representative samples are subjected to a starting time test using the standardized test circuit. The test is conducted at an ambient temperature of 75°+/-10° F with the minimum and maximum load connected and the power source for the test circuit adjusted to apply design voltage at the bulbs. The time measurement starts when the voltage is initially applied.	The requirements of the starting time test are considered to have been met if 17 of 20 samples comply with the following: A flasher having normally closed contacts must open (turn off) within 1.5 sec. after the voltage is applied. A flasher having normally open contacts must complete the first cycle (close the contacts and then open the contacts) within 1.5 sec. after the voltage is applied.
	Voltage drop test	The same twenty sample flashers used in the starting time test are subjected to a voltage drop test using the standardized test circuit. The test is conducted at an ambient temperature of 75°±10° F with the maximum design load connected and the power source for the test circuit adjusted to apply design voltage at the bulbs. The voltage drop is measured between the input and load terminals of the flasher during the "on" period after the flashers have completed at least five consecutive cycles.	The requirements of the voltage drop test are considered to have been met if 17 of 20 samples comply with the following: The lowest voltage drop across any flasher must not exceed 0.8 volt.
	Flash rate and percent current "on" time test	The same twenty sample flashers used in the voltage drop test are subjected to a flash rate and percent of current "on" time test using the standardized test circuit and applying loads of from two signal lamps to the maximum design loading including pilot indicator. Compliance is determined using the following combinations of ambient temperature and bulb voltage: 12.8 volts and 75°±10° F 11.0 volts and 0°±5° F 13.0 volts and 0°±5° F 11.0 volts and 125°±5° F 13.0 volts and 125°±5° F Flash rate and percent current "on" time are measured after the flashers have completed five consecutive cycles and are determined by an average of at least three consecutive cycles.	The requirements of the flash rate and percent current "on" time test are considered to have been met if 17 of 20 samples comply with the following: The performance of a normally closed type flasher must be within the unshaded portion of the polygon shown in Figure 2. The performance of a normally open type flasher must be within the entire rectangle including the shaded areas shown in Figure 2.

TABLE XXI. ASSOCIATED EQUIPMENT PHYSICAL TEST REQUIREMENTS

APPLICABLE ITEM	TEST	PROCEDURE	PERFORMANCE REQUIREMENTS
Vehicular hazard warning signal flasher (The standardized test circuit of SAE J823b, *Flasher Test Equipment,* April 1968 is used for hazard warning signal flasher tests)	Durability test	Twenty sample flashers chosen from random from the thirty samples not used in the previous tests are subjected to a durability test using the standardized test circuit. Conformance of the samples to the starting time, voltage drop, and flash rate and percent of current "on" time tests (limited to the 12.8 volts and 75°±10° F test condition only) is established. The test is conducted on each sample with the maximum design load connected and 13.0 volts applied to the input terminals of the standardized test circuit. The flasher is subjected to continuous flashing for a total time of 36 hours at an ambient temperature of 75°±10° F.	The requirements of the durability test are considered to have been met if, after completion, 17 of 20 samples comply with the performance requirements of the starting time, voltage drop, and flash rate and percent of current "on" time tests (limited to the 12.8 volts and 75°±10° F test condition only) when tested in the standard test circuit with the power source adjusted to provide design voltage to the bulbs and with a minimum load of two signal lamp bulbs and the maximum design load at an ambient temperature of 75°±10° F.
Semiautomatic headlamp beam switching device (all tests are conducted with 13 volts input to the device unless otherwise specified)	Sensitivity test	The sample device is mounted in and operated in the laboratory in the same environment as that encountered on the vehicle, that is tinted glass, grille work, etc. and adjusted for sensitivity in accordance with the manufacturer's instructions. It is exposed to a light source capable of providing a variable intensity of at least 1.5 cd. to 150 cd. at 100 feet from the sample device. The device is switched to the lower beam mode in accordance with the "Dim" limits specified and switched back to the upper beam mode in accordance with the "Hold" limits specified for the specified test positions. To provide more complete information on sensitivity throughout the required vertical and horizontal angles, a set of constant footcandle curves is made at "dim" sensitivities of 17, 25, and 100 cd. at 100 ft.	Operating Limits

Test position (degrees)	Dim (cd. at 100 ft.)	Hold (cd. at 100 ft.)	Test position (degrees)
H	V	Adjust to 15	H
H	2L	25 max.	H
H	4L	40 max.	H
H	6L	75 max.	H
H	2R	25 max.	H
H	5R	100 max. to 40 min.	H
1D	V	30 max.	1D
1U	V	30 max.	1U

There must be no sensitivity voids shown in the constant footcandle curves within the area limited by the test positions

TABLE XXI. ASSOCIATED EQUIPMENT PHYSICAL TEST REQUIREMENTS

APPLICABLE ITEM	TEST	PROCEDURE	PERFORMANCE REQUIREMENTS
Semiautomatic headlamp beam switching device (all tests are conducted with 13 volts input to the device unless otherwise specified)	Voltage regulation test	The sensitivity of the sample device is adjusted so that it complies with the sensitivity test. The "hold" sensitivity is measured at the H-V test position at 11 volts input to the device and at 15 volts input to the device.	The device must switch to the upper beam mode at between 8 (cd. At 100 ft.) and 25 (cd. At 100 ft.) with the input voltage at 11 volts and at 15 volts.
	Manual override test	The sensitivity of the sample device is adjusted so that it complies with the sensitivity test. The device is exposed to a test light that causes it to switch to the lower beam mode. The manufacturer's instructions are followed to cause the device to override the test light and switch to upper beam. In a similar manner, the test light is extinguished to cause the device to switch to the upper beam mode. Again the manufacturer's instructions are followed to cause the device to switch to lower beam.	The device, when operated in accordance with the manufacturer's instructions, must switch to the opposite beam with the test light energized and with the test light extinguished.
	Warmup test	The sensitivity of the sample device is adjusted so that it complies with the sensitivity test and the test lamp extinguished. The test lamp will then be energized at a level of 25 (cd. at 100 ft.) at the H-V position of the device and the time for the device to switch to lower beam is measured.	The period from the time of test lamp energization to the time the device switches to lower beam must not exceed 10 sec.
	Temperature test	The sample device is exposed for 1 hour in a temperature corresponding to that at the device mounting location. For a device mounted in the passenger compartment or the engine compartment, this temperature is 210°F; mounted elsewhere, the temperature is 150°F. After this exposure, the H-V "dim" sensitivity of the sample device is measured over the temperature range of -30°F to +100°F.	The device must switch to the lower beam mode between 8 (cd. at 100 ft.) and 25 (cd. at 100 ft.) over the temperature range of -30°F to +100°F.
	Dust test	The sensitivity of the sample device is adjusted so that it complies with the sensitivity test. The device is then subjected to the dust test of Table XXII. At the conclusion of the dust exposure, the lens of the device is wiped clean and the H-V "dim" sensitivity of the sample device is measured.	The device must switch to the lower beam mode between 8 (cd. at 100 ft.) and 25 (cd. at 100 ft.).

TABLE XXI. ASSOCIATED EQUIPMENT PHYSICAL TEST REQUIREMENTS

APPLICABLE ITEM	TEST	PROCEDURE	PERFORMANCE REQUIREMENTS
Semiautomatic headlamp beam switching device (all tests are conducted with 13 volts input to the device unless otherwise specified)	Corrosion test	The sensitivity of the device is adjusted so that it complies with the sensitivity test. All system components located outside the passenger compartment are subjected to the corrosion test of Table XXII with the device not operating. Water is not be allowed to accumulate on any connector socket. At the conclusion of the test, the H-V "dim" sensitivity of the sample device is measured.	The device must switch to the lower beam mode between 8 (cd. at 100 ft.) and 25 (cd. at 100 ft.).
	Vibration test	The sensitivity of the device is adjusted so that it complies with the sensitivity test and the mechanical aim of the photounit determined. The device is mounted in proper vehicle position and subjected to vibration of 5g constant acceleration for ½ hour in each of three directions; vertical, horizontal and parallel to the vehicle longitudinal axis, and horizontal and normal to the vehicle longitudinal axis. The vibration frequency is varied from 30 to 200 and back to 30 cycles per second over a period of 1 minute. The operation of the device is confirmed during the test. At the conclusion of the test, the H-V "dim" sensitivity of the sample device and the mechanical aim of the photounit are measured.	The device must switch to the lower beam mode between 8 (cd. at 100 ft.) and 25 (cd. at 100 ft.). The mechanical aim of the device photounit must not have changed by more than 0.25° from the initial value.
	Sunlight test	The device is exposed for 1 hour in bright noonday sunlight (5000 fc. minimum illumination with a clear sky) with the photounit aimed as it would be in service and facing an unobstructed portion of the horizon in the direction of the sun. The device is then rested for 1 hour in normal room light at room temperature and the H-V "dim" sensitivity of the sample device must be measured.	The device must switch to the lower beam mode between 8 (cd. at 100 ft.) and 25 (cd. at 100 ft.).
	Durability test	The sensitivity of the device is adjusted so that it complies with the sensitivity test. The device photounit operated at a 13.0 input voltage on a cycle of 90 minutes on and 30 minutes off must be activated by a 60 cd. light source at 100 ft., or equivalent, which is cycled on and off 4 times per minute for a period of 200 hours. The device then rests for 2 hours in a lighted area of 50 to 150 fc., after which the H-V "dim" sensitivity is measured.	The device must switch to the lower beam mode between 8 (cd. at 100 ft.) and 25 (cd. at 100 ft.).
	Return to upper beam test	The sensitivity of the device is adjusted so that it complies with the sensitivity test. The lens of the photounit is exposed to light of 100 fc. for 10 sec.	The device must switch to upper beam mode within 2 sec. after the 100 fc light is extinguished.

TABLE XXII: SIGNAL LAMP, MOTORCYCLE HEADLAMP, AND REFLECTIVE DEVICES PHYSICAL TEST REQUIREMENTS		
TEST	**PROCEDURE**	**PERFORMANCE REQUIREMENTS**
Vibration test	The device, as mounted on the support supplied, is bolted to the anvil end of the table of the vibration test machine of SAE J577, *Vibration Test Machine,* April 1964, and vibrated approximately 750 cpm through a distance of 1/8 in. The table is spring mounted at one end and fitted with steel calks on the underside of the other end. The calks are to make contact with the steel anvil once during each cycle at the completion of the fall. The rack is operated under a spring tension of 60 to 70 lb. The test is conducted for a period of 1 hour.	After completion of the vibration test, a device showing evidence of material physical weakness, lens or reflector rotation, displacement or rupture of parts except bulb failures, is considered to have failed, providing that the rotation of lens or reflector is not considered as a failure when tests show compliance with specifications despite such rotation.
Moisture test	The device is mounted in its normal operating position with all drain holes open and subjected to a precipitation of 0.1 in. of water per minute, delivered at an angle of 45° from a nozzle with a solid cone spray. During the test, the device is revolved about its vertical axis at a rate of 4 rpm for a period of 12 hours followed by a drain period where the device does not rotate and the spray stops.	After completion of the moisture test, the device is examined for moisture accumulation. Accumulation of moisture in excess of 2 cc. constitutes a failure.
Dust test	The device, with any drain hole closed, is mounted in its normal operating position, at lease 6 in. from the wall in a cubical box with inside measurements of 3 ft on each side containing 10 lb of fine powered cement in accordance with ASTM C 150-56, *Specification for Portland Cement.* At intervals of 15 minutes, during a test period of 5 hours, the dust is agitated by compressed air or fan blower by projecting blasts of air for a 2 sec. period in a downward direction into the dust in such a way that the dust is completely and uniformly diffused throughout the entire cube and allowed to settle.	After the completion of the dust test, the exterior surface of the device is cleaned. If, after a photometry test, the maximum photometric intensity of the device is not more than 10% less than the maximum photometric intensity of the same device after being cleaned both inside and outside, the device is considered to have met the requirements of the dust test.
Corrosion test	The device is subjected to a salt spray test in accordance with the latest version of ASTM B117, *Method of Salt Spray (Fog) Testing,* for a period of 50 hr., consisting of two periods of 24 hour exposure followed by a 1 hr drying time.	After the completion of the corrosion test, no evidence of excessive corrosion is permitted which would affect the proper function of the device.
Out of focus test	The device is tested for photometry using bulbs having each of four out-of-focus filament positions. Where conventional bulbs with two pin bayonet bases are used, tests are made with the light source 0.060 in above, below, ahead, and behind the designated position. If prefocused bulbs are used, the limiting positions at which tests are made are 0.020 in above, below, ahead, and behind the designated position. The sample device may be reaimed for each of the out-of-focus positions of the light source.	The minimum photometric values for the out-of-design position are 80% of the in-design position.

TABLE XXII: LAMP AND REFLECTIVE DEVICES PHYSICAL TEST REQUIREMENTS

TEST	PROCEDURE	PERFORMANCE REQUIREMENTS
Color test The color of the sample device complies when tested by either the Visual Method or the Tristimulus Method. The device is operated at design voltage. Components (bulbs, caps, lenses, and the like) are tested in a fixture or manner simulating the intended application. The lamp is allowed to reach operating temperature before measurements are made. The entire light emitting surface of the sample is visible from any point on the entrance window of the test instrument. The distance between the test instrument and the sample should be great enough so that further increases in distance will not affect the results.	*Visual method.* The color of light from the sample device is compared visually with the color of the light from a standard. The standard may consist of a filter or limit glass. In the case of white, CIE Source A is used only as a color reference. The chromaticity coordinates of the color standards are as close as possible to the limits listed. The color of the standard filters is determined spectro-photometrically.	The appropriate requirement for each color is as listed: *Red* – Red is not acceptable if it is less saturated (paler), yellower, or bluer than the limit standards. *Yellow (Amber)* – Yellow is acceptable if it is less saturated (paler), greener, or redder than the limit standards. *White* – White is not acceptable if its color differs materially from that of CIE Source A. *Green* – Green is acceptable if it is less saturated (paler), yellower, or bluer than the limit standards. *Blue* – Blue is not acceptable if it is less saturated, greener, or redder than the limit standards.
	Tristimulus method. The color of light from the H-V point of a sample device is measured by photoelectric receivers with spectral responses that approximate CIE standard spectral tristimulus valves. A sphere may be used to integrate light from a colored source provided that the color shift that results from the spectral selectivity of the sphere paint be corrected by the use of a filter, correction factor, or an appropriate calibration. Where the sample device does not have uniform spectral characteristics in all useful directions, color measurements are made at as many directions of view as are required to evaluate the color for those directions that apply to the end use of the device.	The color must comply with the appropriate requirement. *Red* – the color of light emitted must fall within the following boundaries: $y = 0.33$ (yellow boundary) $y = 0.98 - x$ (purple boundary) *Yellow (Amber)* – – the color of light emitted falls within the following boundaries: $y = 0.39$ (red boundary) $y = x - 0.12$ (green boundary) $y = 0.79 - 0.67x$ (white boundary) *White (achromatic)* – the color of light emitted must fall within the following boundaries: $x = 0.31$ (blue boundary) $y = 0.44$ (green boundary) $x = 0.50$ (yellow boundary) $y = 0.38$ (red boundary) $y = 0.15 + 0.64x$ (green boundary) $y = 0.05 + 0.75x$ (purple boundary) *Green* – the color of light emitted must fall within the following boundaries: $y = 0.73 - 0.73x$ (yellow boundary) $y = 0.50 - 0.50x$ (blue boundary) $x = 0.63y - 0.04$ (white boundary) *Blue (signal blue)* – the color of light emitted must fall within the following boundaries: $y = 0.32$ (green boundary) $x = 0.40 - y$ (white boundary) $x = 0.16$ (white boundary) $x = 0.13 + 0.60y$ (violet boundary)

TABLE XXII: LAMP AND REFLECTIVE DEVICES PHYSICAL TEST REQUIREMENTS

APPLICATION	TEST	SAMPLES	PROCEDURE	PERFORMANCE REQUIREMENTS	
Plastic optical materials tests. All plastic materials used for optical parts such as lenses and reflectors must conform to the requirements of this section. Accelerated weathering procedures are not permitted	Outdoor exposure tests. Outdoor exposure tests of 3 years in duration are conducted on samples of all materials, including coated and uncoated versions, used for optical parts of devices covered by this standard. Tests are to be conducted in Florida and Arizona. Concentrations of polymer components and additives used in plastic materials may be changed without outdoor exposure testing provided the changes are within the limits of composition represented by higher and lower concentrations of these polymer components and additives previously tested to this section and found to meet its requirements.	Samples of materials are injection molded into polished metal molds to produce test specimens with two flat and parallel faces. Alternative techniques may be used to produce equivalent specimens. Test specimens shape may vary, but each exposed surface should contain a minimum uninterrupted area of 32 sq. cm. Samples are furnished in thicknesses of; 1.6± 0.25 mm., 2.3 ±0.25 mm., 3.2 ± 0.25 mm., and 6.4± 0.25 mm. All samples conform to the appropriate color test requirement of this standard prior to testing. A control sample of each thickness, kept properly protected from influences which may change its appearance and properties, is retained.	One sample of each thickness of each material is mounted at each exposure site so that at least a minimum uninterrupted area of 32 sq. cm. of the exposed upper surface of the sample is at an angle of 45° to the horizontal facing south. During the exposure time, the samples are cleaned once every three months by washing with mild soap or detergent and water, and then rinsing with distilled water. Rubbing is not permitted.	Plastic lenses, other than those incorporating reflex reflectors, used for inner lenses or those covered by another material and not exposed directly to sunlight must meet the optical material test requirements when covered by the outer lens or other material.	
				After completion of the outdoor exposure test, the haze and loss of surface luster as measured by ASTM 1003-92, *Haze and Luminous Transmittance of Transparent Plastic,* must not be greater than:	30% for materials used for outer lenses, other than those incorporating reflex reflectors.
					7% for materials used for reflex reflectors and lenses used in front of reflex reflectors.
					0% for materials used for headlamp lenses.
				After completion of the outdoor exposure test, materials, when compared with the unexposed control samples, must not show physical changes affecting performance such as color bleeding, delamination, crazing, or cracking. Materials used for reflex reflectors and lenses used in front of reflex reflectors must not show surface deterioration or dimensional changes.	
	Heat test.		Two samples of each thickness of each material are supported at the bottom, with at least 51 mm. of the sample above the support, in the vertical position in such a manner that, on each side, the minimum uninterrupted area of exposed surface is not less than 3225 sq. mm. The samples are placed in a circulating air oven at 79 ± 3° C for two hours.	After completion of the heat exposure and cooling to room ambient temperature, a test specimen must show no change in shape and general appearance discernable to the naked eye when compared with an unexposed specimen, and must continue to conform to the appropriate color test requirement of this standard.	

TABLE XXIII: HEADLAMP PHYSICAL TEST REQUIREMENTS

APPLICABILITY	TEST	PROCEDURE	PERFORMANCE REQUIREMENTS
All integral beam, replaceable bulb, and combination headlamps, except those with glass lenses and motorcycle headlamps designed to the requirements of S13.	Abrasion test	A sample headlamp is mounted in the abrasion test fixture of Figure 5 with the lens facing upward. A new, unused abrading pad constructed of 0000 steel wool not less than 2.5±.1 cm. wide rubber cemented to a rigid base shaped to the same vertical contour of the lens is used for each test. The abrading pad support is equal in size to the pad and the center of the support surface is within ±2 mm. of parallel to the lens surface. The "grain" of the pad is oriented perpendicular to the direction of motion. The density of the pad is such that when the pad is resting unweighted on the lens, the base of the pad is no closer than 3.2 mm. to the lens at its closest point. When mounted on its support and resting on the lens of the test headlamp, the abrading pad is then weighted such that a pad pressure of 14±1 KPa. exists at the center and perpendicular to the face of the lens. The pad is cycled back and forth (1 cycle) for 11 cycles at 10±cm. per second over at least 80% of the lens surface, including all the area between the upper and lower aiming pads, but not including lens trim rings and edges. A pivot is used if it is required to follow the contour of the lens.	After completion of the abrasion test the sample headlamp must meet the requirements of the appropriate photometry tests of Table XIX and Table XVIII. A ¼° reaim is permitted in any direction at any test point.
All integral beam, replaceable bulb, and combination headlamps except those with a nonreplaceable glass lenses and motorcycle headlamps designed to the requirements of S13.	Chemical resistance test.	The entire exterior lens surface of the sample headlamp mounted in the headlamp test fixture and top surface of the lens-reflector joint is wiped once to the left and once to the right with a 6-inch square soft cotton cloth (with pressure equally applied) which has been saturated once in a container with 2 ounces of five different test fluids listed below. The lamp is wiped within 5 seconds after removal of the cloth from the test fluid. A new lamp sample may be used with each fluid. The test fluids are: (1) ASTM Reference Fuel C, which is composed of Isooctane 50% volume and Toluene 50% volume. Isooctane which conforms to A2.7 in Annex 2 of the Motor Fuels Section of the 1985 Annual Book of ASTM Standards, Vol. 05.04, and Toluene which conforms to ASTM specification D362-84, Standard Specification for Industrial Grade Toluene. ASTM Reference Fuel C is used as specified in: Paragraph A2.3.2 and A2.3.3 of Annex 2 to Motor Fuels, Section 1in the 1985 Annual Book of ASTM Standards; and OSHA Standard 29 CFR 1910.106--Handling Storage and Use of Flammable Combustible Liquids. (2) Tar remover (consisting by volume of 45% xylene and 55% petroleum base mineral spirits). (3) Power steering fluid (as specified by the vehicle manufacturer for use in the motor vehicle on which the headlamp is intended to be installed). (4) Windshield washer fluid consisting of 0.5% monoethanolamine with the remainder 50% concentration of methanol/distilled water by volume. (5) Antifreeze (50% concentration of ethylene glycol/distilled water by volume). After the headlamp sample has been wiped with the test fluid, it is stored in its designed operating attitude for 48 hours at a temperature of 23°C±4°C and a relative humidity of 30%±10%. At the end of the 48-hour period, the headlamp is wiped clean with a soft dry cotton cloth and visually inspected.	After completion of the chemical resistance test, the sample headlamp must have no surface deterioration, coating delamination, fractures, deterioration of bonding or sealing materials, color bleeding, or color pickup visible without magnification, and the headlamp must meet the requirements of the appropriate photometry tests of Table XIX and Table XVIII. A ¼° reaim is permitted in any direction at any test point.

TABLE XXIII: HEADLAMP PHYSICAL TEST REQUIREMENTS

APPLICABILITY	TEST	PROCEDURE	PERFORMANCE REQUIREMENTS
All headlamps, except motorcycle headlamps designed to the requirements of S13.	Corrosion test	A sample headlamp, mounted on a headlamp test fixture in designed operating position and including all accessory equipment necessary to operate in its normal manner, is subjected to a salt spray (fog) test in accordance with ASTMB117-73, Method of Salt Spray Testing, for 50 total hours, consisting of two periods of 24 hours exposure followed by a 1 hour drying period. If a portion of the device is completely protected in service, that portion is covered to prevent salt fog entry during exposure. After removal from the salt spray and the final 1 hour drying period, the sample headlamp is examined for corrosion that affects any other applicable tests contained in this Table. If such corrosion is found, the affected test(s) are performed on the corrosion sample and the results recorded.	After completion of the corrosion test, the sample headlamp must not have any observed corrosion which would result in the failure of any other applicable tests contained in this Table and no corrosion of the headlamp mounting and aiming mechanism that would result in the failure of the aiming adjustment tests, inward force test, or torque deflection test of this Table.
All integral beam, replaceable bulb, and combination headlamps except integral beams of sealed design verified by the Sealing test of this Table, and motorcycle headlamps designed to the requirements of S13.	Corrosion-connector test.	(a) A headlamp connector test is performed on each filament circuit of the sample headlamp prior to the test in subparagraph (b) according to Figure 4 and Table XXIII. The power source is set to provide 12.8 volts and the resistance is set to produce 10 amperes. (b) The headlamp with connector attached to the terminals, unfixtured and in its designed operating attitude with all drain holes, breathing devices or other designed openings in their normal operating positions, is subjected to a salt spray (fog) test in accordance with ASTM B117-73, Method of Salt Spray (Fog) Testing, for 240 hours, consisting of ten successive 24-hour periods. During each period, the headlamp is mounted in the middle of the chamber and exposed for 23 hours to the salt spray. The spray is not activated during the 24th hour. The bulb is removed from the headlamp and from the test chamber during the one hour of salt spray deactivation and reinserted for the start of the next test period, at the end of the first and last three 23-hour periods of salt spray exposure, and at the end of any two of the fourth through seventh 23-hour periods of salt-spray exposure. The test chamber is closed at all times except for a maximum of 2 minutes which is allowed for removal or replacement of a bulb during each period. After the ten periods, the lens reflector unit without the bulb is immersed in deionized water for 5 minutes, then secured and allowed to dry by natural convection only. (c) Using the voltage, resistance, and pretest set-up of paragraph (a), the current in each filament circuit is measured after the test conducted in paragraph (b).	After the completion of the corrosion-connector test, the sample headlamp must show no evidence of external or internal corrosion or rust visible without magnification. Loss of adhesion of any applied coating must not occur more than 3.2 mm from any sharp edge on the inside or out. Corrosion may occur on terminals only if the test current produced during test (c) is not less than 9.7 amperes.
All integral beam, replaceable bulb, and combination headlamps, except integral beams of sealed design verified by the Sealing test of this Table, and motorcycle headlamps designed to the requirements of S13.	Dust test.	A sample headlamp, mounted on a headlamp test fixture, with all drain holes, breathing devices or other designed openings in their normal operating positions, is positioned within a cubical box, with inside measurements of 900 mm. on each side or larger if required for adequate wall clearance (i.e., a distance of at least 150 mm between the headlamp and any wall of the box). The box contains 4.5 kg. of fine powdered cement which conforms to the ASTM C150-77 specification for Portland Cement. Every 15 minutes, the cement is agitated by compressed air or fan blower(s) by projecting blasts of air for a two-second period in a downward direction so that the cement is diffused as uniformly as possible throughout the entire box. This test is continued for five hours after which the exterior surfaces of the headlamp is wiped clean.	After completion of the dust test, the sample headlamp must meet the requirements of the appropriate photometry tests of Table XIX and Table XVIII. A ¼° reaim is permitted in any direction at any test point.

TABLE XXIII: HEADLAMP PHYSICAL TEST REQUIREMENTS

APPLICABILITY	TEST	PROCEDURE		PERFORMANCE REQUIREMENTS
All integral beam, replaceable bulb, and combination headlamps, except and motorcycle headlamps designed to the requirements of S13. Headlamps with a glass lens and a non-plastic reflector need not meet the Internal heat test.	Temperature cycle test.	A sample headlamp with one or more replaceable light sources is tested according to the procedures of this section for a temperature cycle test and an internal heat test. Tests are made with all filaments lighted at design voltage that are intended to be used simultaneously in the headlamp and which in combination draw the highest total wattage. These include but are not limited to filaments used for turn signal lamps, fog lamps, parking lamps, and headlamp lower beams lighted with upper beams when the wiring harness is so connected on the vehicle. If a turn signal is included in the headlamp assembly, it is operated at 90 flashes a minute with a 75% ± 2% current "on time". If the lamp produces both the upper and lower beam, it is tested in both the upper beam mode and the lower beam mode under the conditions above described, except for a headlamp with a single type HB1 or type HB2 light source. The same sample headlamp is used in the temperature cycle test and then in the internal heat test.	A sample headlamp, mounted on a headlamp test fixture, is subjected to 10 complete consecutive cycles having the thermal cycle profile shown in Figure 6. During the hot cycle, the lamp is energized commencing at point "A" of Figure 6 and de-energized at point "B". Separate or single test chambers may be used to generate the environment of Figure 6. All drain holes, breathing devices or other openings or vents of the headlamps are set in their normal operating positions.	After completion of the temperature cycle test, the sample headlamp must show no evidence of delamination, fractures, entry of moisture, or deterioration of bonding material, color bleeding, warp or deformation visible without magnification, or lens warpage greater than 3 mm when measured parallel to the optical axis at the point of intersection of the axis of each light source with the exterior surface of the lens, and it must meet the requirements of the appropriate photometry tests of Table XIX and Table XVIII. A ¼° reaim is permitted in any direction at any test point.
	Internal heat test.		A sample headlamp lens surface that would normally be exposed to road dirt is uniformly sprayed with any appropriate mixture of dust and water or other materials to reduce the photometric output at the H-V test point of the upper beam (or the ½D-1½R test point of the lower beam as appropriate) to 25%±2% of the output originally measured in the appropriate photometric compliance test. A headlamp with a single type HB1 or type HB2 light source is tested on the upper beam only. Such reduction is determined under the same conditions as that of the original photometric measurement. After the photometric output of the lamp has been reduced as specified above, the sample lamp and its mounting hardware are mounted in an environmental chamber in a manner similar to that indicated in Figure 7 "Dirt/Ambient Test Setup". The headlamp is soaked for one hour at a temperature of 35° + 4° -0° C) and then the lamp is energized according to the procedure of this section for one hour in a still air condition, allowing the temperature to rise from the soak temperature. At the end of one hour the sample lamp is returned to a room ambient temperature of 23° + 4° -0° C and a relative humidity of 30%±10% and allowed to stabilize to the room ambient temperature. The lens is then cleaned.	After completion of the temperature cycle test and meeting its requirements, and completion of the internal heat test, the sample headlamp must have no lens warpage greater than 3 mm when measured parallel to the optical axis at the point of intersection of the axis of each light source with the exterior surface of the lens, and it must meet the requirements of the appropriate photometry tests of Table XIX and Table XVIII. A ¼° reaim is permitted in any direction at any test point.

TABLE XXIII: HEADLAMP PHYSICAL TEST REQUIREMENTS

APPLICABILITY	TEST	PROCEDURE	PERFORMANCE REQUIREMENTS
All integral beam, replaceable bulb, and combination headlamps, except integral beams of sealed design verified by the Sealing test of this Table, and motorcycle headlamps designed to the requirements of S13.	Humidity test.	The test fixture consists of a horizontal steel plate to which three threaded steel or aluminum rods of ½ inch diameter are screwed vertically behind the headlamp. The sample headlamp assembly is clamped to the vertical rods, which are behind the headlamp. All attachments to the headlamp assembly are made behind the lens and vents or openings, and are not within 2 inches laterally of a vent inlet or outlet. (b) The mounted headlamp assembly is oriented in its design operating position, and is placed in a controlled environment at a temperature of 100°+7°/-0° F (38°+4°/-0° C) with a relative humidity of not less than 90%. All drain holes, breathing devices, and other openings are set in their normal operation positions for all phases of the humidity test. The headlamp is subjected to 24 consecutive 3-hour test cycles. In each cycle, the headlamp is energized for 1 hour at design voltage with the highest combination of filament wattages that are intended to be used, and then de-energized for 2 hours. If the headlamp incorporates a turn signal then the turn signal flashes at a rate of 90 flashes per minute with a 75%±2% current "on-time". (c) Within 3 minutes after the completion of the 24th cycle, the air flow test will begin. The following procedure is to occur: the mounted assembly is removed, placed in an insulating box and covered with foam material so that there is no visible air space around the assembly; the box is closed, taken to the air flow test chamber, and placed within it. Inside the chamber, the assembly with respect to the air flow, is to be oriented in its design operating position. The assembly is positioned in the chamber so that the center of the lens is in the center of the opening of the air flow entry duct during the test. The headlamp has at least 3 inches clearance on all sides, and at least 4 inches to the entry and exit ducts at the closest points. If vent tubes are used which extend below the lamp body, the 3 inches are measured from the bottom of the vent tube or its protection. The temperature of the chamber is 73°+7°/-0° F (23°+4°/-0° C) with a relative humidity of 30% + 10% / - 0%. The headlamp is not energized. (d) Before the test specified in paragraph (e) of this section, the uniformity of the air flow in the empty test chamber at a plane 4 inches downstream of the air entry duct is measured over a 4-inch square grid. The uniformity of air flow at each grid point is 10% of the average air flow specified in paragraph (e) of this section. (e) The mounted assembly in the chamber is exposed, for one hour, to an average air flow of 330+0-30 ft/min. as measured with an air velocity measuring probe having an accuracy of ±3% in the 330 ft/min range. The average air flow is the average of the velocity recorded at six points around the perimeter of the lens. The six points are determined as follows: At the center of the lens, construct a horizontal plane. The first two points are located in the plane, 1 inch outward from the intersection of the plane and each edge of the lens. Then, trisect the distance between these two points and construct longitudinal vertical planes at the two intermediate locations formed by the trisection. The four remaining points are located in the vertical planes, one inch above the top edge of the lens, and one inch below the bottom edge of the lens. (f) After one hour, the headlamp is removed and inspected for moisture.	After completion of the humidity test, the sample headlamp must show no evidence of interior delamination or moisture, fogging or condensation visible without magnification, and it must meet the requirements of the appropriate photometry tests of Table XIX and Table XVIII. A ¼° reaim is permitted in any direction at any test point.

TABLE XXIII: HEADLAMP PHYSICAL TEST REQUIREMENTS

APPLICABILITY	TEST	PROCEDURE	PERFORMANCE REQUIREMENTS
All headlamps except motorcycle headlamps designed to the requirements of S13.	Vibration test.	The sample headlamp, as mounted on the support supplied, is bolted to the anvil end of the table of the vibration test machine of SAE J577, *Vibration Test Machine,* April 1964, and vibrated 750 cpm through a distance of 1/8 in. The table is spring mounted at one end and fitted with steel calks on the underside of the other end. The table is of sufficient size to completely contain the test fixture base with no overhang. The calks are to make contact with the steel anvil once during each cycle at the completion of the fall. The rack is operated under a spring tension of 60 to 70 lb. The vibration is applied in the vertical axis of the headlamp as mounted on the vehicle. Bulb filaments are not energized during the test. The test is continued for 1 hour.	After completion of the vibration test, there must be no evidence of loose or broken parts, other than filaments, visible without magnification.
Integral beam except motorcycle headlamps designed to the requirements of S13. (Optional)	Sealing test.	An unfixtured sample headlamp in its design mounting position is placed in water at a temperature of 176°± 5° F (60°± 3° C) for one hour. The headlamp is energized in its highest wattage mode, with the test voltage at 12.8±0.1 V. during immersion. The lamp is then de-energized and immediately submerged in its design mounting position into water at 32° +5°/ -0° F (0° +3°/ -0° C). The water is in a pressurized vessel, and the pressure is increased to 10 psi (70 kPa), upon placing the lamp in the water. The lamp remains in the pressurized vessel for a period of thirty minutes. This entire procedure is repeated for four cycles. Then the lamp is inspected for any signs of water on its interior. During the high temperature portion of the cycles, the lamp is observed for signs of air escaping from its interior.	After completion of the sealing test, a sample headlamp confirmed to be sealed need not meet the corrosion test, dust test, or humidity test of this Table. If any water occurs on the interior or air escapes, the lamp is not a sealed lamp.
Replaceable bulb headlamps incorporating replaceable lens, except motorcycle headlamps designed to the requirements of S13.	Chemical resistance of reflectors of replaceable lens headlamps.	With a sample headlamp in the headlamp test fixture and the lens removed, the entire surface of the reflector that receives light from a headlamp light source is wiped once to the left and once to the right with a 6-inch square soft cotton cloth (with pressure equally applied) which has been saturated once in a container with 2 ounces of one of the test fluids listed in paragraph (b). The lamp is wiped within 5 seconds after removal of the cloth from the test fluid. (b) The test fluids are: (1) Tar remover (consisting by volume of 45% xylene and 55% petroleum base mineral spirits); (2) Mineral spirits; or (3) Fluids other than water contained in the manufacturer's instructions for cleaning the reflector. (c) After the headlamp has been wiped with the test fluid, it is stored in its designed operating attitude for 48 hours at a temperature of 73°±7° F (23°±4° C) and a relative humidity of 30%±10%. At the end of the 48-hour period, the headlamp is wiped clean with a soft dry cotton cloth and visually inspected.	After completion of the chemical resistance test, the sample headlamp must have no surface deterioration, coating delamination, fractures, deterioration of bonding or sealing materials, color bleeding or color pickup visible without magnification, and the headlamp must meet the requirements of the appropriate photometry tests of Table XIX and Table XVIII. A ¼° reaim is permitted in any direction at any test point.

TABLE XXIII: HEADLAMP PHYSICAL TEST REQUIREMENTS

APPLICABILITY	TEST	PROCEDURE	PERFORMANCE REQUIREMENTS
Replaceable bulb headlamps incorporating replaceable lens, except motorcycle headlamps designed to the requirements of S13.	Corrosion resistance of reflectors of replaceable lens headlamps.	A sample headlamp with the lens removed, unfixtured and in its designed operating attitude with all drain holes, breathing devices or other designed openings in their normal operating positions, is subjected to a salt spray (fog) test in accordance with ASTM B117-73, Method of Salt Spray (Fog) Testing, for 24 hours, while mounted in the middle of the chamber. Afterward, the headlamp is stored in its designed operating attitude for 48 hours at a temperature of 73° ± 7°F (23° ±4°C) and a relative humidity of 30% ± 10% and allowed to dry by natural convection only. At the end of the 48-hour period, the reflector is cleaned according to the instructions supplied with the headlamp manufacturer's replacement lens, and inspected. The lens and seal are then attached according to these instructions and the headlamp tested for photometric performance.	After the completion of the corrosion test, the sample headlamp must show no evidence of corrosion or rust visible without magnification on any part of the headlamp reflector that receives light from a headlamp light source, on any metal light or heat shield assembly, or on a metal reflector of any other lamp. The sample headlamp with the replacement lens installed must meet the requirements of the appropriate photometry tests of Table XIX and Table XVIII. A ¼° reaim is permitted in any direction at any test point.
All headlamps, except motorcycle headlamps designed to the requirements of S13.	Inward force test	A sample headlamp mechanism, including the aiming adjusters, is subjected to an inward force of 222 N directed normal to the headlamp aiming plane and symmetrically about the center of the headlamp lens face.	After the completion of the inward force test, a sample headlamp must not permanently recede by more than 2.5 mm. The aim of the headlamp must not permanently deviate by more than 3.2 mm at a distance of 7.6 m. Any headlamp that is capable of being mechanically aimed by externally applied aiming devices must not change by more than 0.30°.

TABLE XXIII: HEADLAMP PHYSICAL TEST REQUIREMENTS

APPLICABILITY	TEST	PROCEDURE	PERFORMANCE REQUIREMENTS
All sealed beam headlamps and all integral beam, replaceable bulb, and combination headlamps capable of being mechanically aimed by externally applied headlamp aiming devices specified in SAE J602 OCT80, *Headlamp Aiming Device for Mechanically Aimable Sealed Beam Headlamp Units.*	Torque deflection test	The sample headlamp assembly is mounted in designed vehicle position and set at nominal aim (H=0, V=0). A sealed beam headlamp, except Type G and Type H, is removed from its mounting and replaced by the appropriate deflectometer. (Type C and Type D-Figure 18, Type A and Type E-Figure 16, Type B-Figure 17, and Type F-Figure 14). Sealed beam headlamps Type G and Type H have the adapter of Figure 15 and the deflectometer of Figure 14 attached to the headlamp. A torque of 2.25 Nm is applied to the headlamp assembly through the deflectometer and a reading on the thumbwheel is taken. The torque is removed and a second reading on the thumbwheel is taken. Headlamps other than sealed beam headlamps have the downward force used to create the torque applied parallel to the aiming reference plane, through the aiming pads, and displaced forward using a lever arm such that the force is applied on an axis that is perpendicular to the aiming reference plane and originates at the center of the aiming pad pattern (see Figure 3). For headlamps using the aiming pad locations of Group I, the distance between the point of application of force and the aiming reference plane is not less than 168.3 mm plus the distance from the aiming reference plane to the secondary plane, if used. For headlamps using the aiming pad locations of Group II, the distance between the point of application of force and the aiming reference plane is not less than 167.9 mm plus the distance to the secondary plane, if used. For headlamps using the nonadjustable Headlamp Aiming Device Locating Plates for the 146 mm diameter, the 176 mm diameter, and the 92x150 mm sealed beam, the distance between the point of application of force and the aiming plane is not, respectively, less than 177.4 mm, 176.2 mm, and 193.7 mm.	The aim of each sample headlamp must not deviate more than 0.30° when the downward torque is removed.
Sealed beam headlamp Types A, B, C, D, E, and F.	Retaining ring test	A sample headlamp with the minimum flange thickness of: Type A-31.5 mm, Type B-10.1 mm, Type C-11.8 mm, Type D-11.8 mm, Type E-31.5 mm, and Type F-8.6 mm., is secured between the appropriate mounting ring and retaining ring (mounting ring and aiming ring for Type F)	The sample headlamp when secured per the procedure must be held tight enough that it will not rattle.
All headlamps except motorcycle headlamps designed to the requirements of S13.	Headlamp connector test	A sample headlamp connected into the test circuit of Figure 4 has the power supply adjusted until 10 amperes DC are flowing through the circuit. The test is repeated for each filament circuit of the headlamp.	The voltage drop, as measured in the test circuit of Figure 4, must not exceed 40 mv DC in any applicable filament circuit of the sample headlamp.
Sealed beam headlamp Types A, B, C, D, E, F, G, and H.	Headlamp wattage test	A sample headlamp that has been seasoned is energized so as to have 12.8 v±20 mv DC applied across each filament circuit and the current flowing in each circuit is measured.	The wattage of each filament circuit of the sample headlamp must not exceed the appropriate value for that type of headlamp as shown in Table II.

TABLE XXIII: HEADLAMP PHYSICAL TEST REQUIREMENTS

APPLICABILITY	TEST	PROCEDURE	PERFORMANCE REQUIREMENTS
All headlamps, except motorcycle headlamps designed to the requirements of S13.	Aiming adjustment test (Laboratory)	A sample headlamp is mounted in design position at nominal (H=0, V=0) aim with an accurate measuring device such as a spot projector or other equally accurate means attached. The headlamp is adjusted to the extremes of travel in each horizontal and vertical direction.	A sample sealed beam headlamp, other than a Type F, tested per the procedure must provide a minimum of ±4.0° adjustment range in both the vertical and horizontal planes and, if equipped with independent vertical and horizontal aiming screws, the adjustment must be such that neither the vertical nor horizontal aim must deviate more than 100 mm from horizontal or vertical planes, respectively, at a distance of 7.6 m through an angle of ±4.0°. A sample Type F sealed beam, integral beam, replaceable bulb, or combination headlamp tested per the procedure must provide a minimum of ±4.0° adjustment range in the vertical plane and ±2.5° in the horizontal plane and if equipped with independent vertical and horizontal aiming screws, the adjustment must be such that neither the vertical nor horizontal aim must deviate more than 100 mm from horizontal or vertical planes, respectively, at a distance of 7.6 m through an angle of ±2.5° and ±4.0° respectively. A sample headlamp that is aimed by moving the reflector relative to the lens and headlamp housing, and vice-versa must provide a minimum adjustment range in the vertical plane not less than the full range of the pitch on the vehicle on which it is installed and ± 2.5° in the horizontal plane. Visually aimed lower beam headlamps without a VHAD are required not to have a horizontal adjustment mechanism and horizontal aim range requirements do not apply.
All headlamps except motorcycle headlamps designed to the requirements of S13.	Aiming adjustment test (On vehicle)	A sample headlamp is mounted on the vehicle at nominal (H=0, V=0) aim with an accurate measuring device such as a spot projector or other equally accurate means attached. The installed range of static pitch angle is, at a minimum, determined from unloaded vehicle weight to gross vehicle weight rating, and incorporates pitch angle effects from maximum trailer or trunk loadings, the full range of tire intermix sizes and suspensions recommended and/or installed by the vehicle manufacturer, and the anticipated effects of variable passenger loading. The headlamp is adjusted to the extremes of travel in each horizontal and vertical direction	A sample headlamp tested per the procedure must provide a minimum vertical adjustment range not less than the full range of pitch of the vehicle on which it is installed. The vertical aim mechanism must be continuously variable over the full range. The adjustment of one aim axis through its full on-vehicle range must not cause the aim of the other axis to deviate more than ±0.76°. If this performance is not achievable, the requirements of S14.4.1 apply, except that if the aiming mechanism is not a VHAD, the requirements specific to VHADs are not applicable, and the instruction must be specific to the aiming mechanism installed.

TABLE XXIII: REPLACEABLE LIGHT SOURCE PHYSICAL TEST REQUIREMENTS			
APPLICABILITY	**TEST**	**PROCEDURE**	**PERFORMANCE REQUIREMENTS**
All replaceable light sources.	Deflection test for replaceable light sources.	With the sample light source rigidly mounted in a fixture in a manner indicated in Figure 8, a force 4.0±0.1 pounds (17.8±0.4N) is applied at a distance "A" from the reference plane perpendicular to the longitudinal axis of the glass capsule and parallel to the smallest dimension of the pressed glass capsule seal. The force is applied (using a rod with a hard rubber tip with a minimum spherical radius of .039 in (1 mm)) radially to the surface of the glass capsule in four locations in a plane parallel to the reference plane and spaced at a distance "A" from that plane. These force applications are spaced 90° apart starting at the point perpendicular to the smallest dimension of the pressed seal of the glass capsule. The bulb deflection is measured at the glass capsule surface at 180° opposite to the force application. Distance "A" for a replaceable light source other than an HB Type is the dimension provided in accordance with Appendix A of part 564 of this chapter, section I.A.1 if the light source has a lower beam filament, or as specified in section I.B.1 if the light source has only an upper beam filament.	After completion of the deflection test, a sample light source must have no permanent deflection of the glass envelope exceeding 0.13 mm in the direction of applied force.
All replaceable light sources	Pressure test for replaceable light sources.	The capsule, lead wires and/or terminals, and seal on each sample Type HB1, Type HB3, Type HB4, and Type HB5 light source, and on any other replaceable light source which uses a seal, is installed in a pressure chamber as shown in Figure 10 so as to provide an airtight seal. The diameter of the aperture in Figure 10 on a replaceable light source (other than a HB Type) must be that dimension furnished for such light source in compliance with Appendix A or Appendix B of 49 CFR Part 564. The light source is immersed in water for one minute while inserted in a cylindrical aperture specified for the light source, and subjected to an air pressure of 70KPa (10psig) on the glass capsule side.	After completion of the pressure test, the sample light source with an airtight seal on the low pressure (connector side) must show no evidence of air bubbles on that side.

TABLE XXIII: VEHICLE HEADLAMP AIMING DEVICE (VHAD) PHYSICAL TEST REQUIREMENTS

TEST	PROCEDURE		PERFORMANCE REQUIREMENTS
Scale graduation test	The same VHAD and associated headlamp(s) or headlamp assembly are rigidly mounted in a headlamp test fixture with the aiming plane horizontal and vertical and with the scale on the device set at 0.	Check each graduation on the horizontal and vertical aim scales.	Scale graduation from correct aim must not exceed ±0.2° horizontally and ±0.1° vertically.
Cold scale graduation test		The VHAD and an unlighted headlamp assembly are then stabilized at -7° ± 3°C in a circulating air environmental test chamber.	After completion of a 30 minute temperature soak the variation from correct aim shown by the sample VHAD must not exceed ±0.2° horizontally and ±0.1° vertically.
Hot scale graduation test		The VHAD and the headlamp assembly with its highest wattage filament, or combination of filaments intended to be used simultaneously, energized at its design voltage, is then stabilized at 38°±3°C in a circulating air environmental test chamber.	After completion of a 30 minute temperature soak the variation from correct aim shown by the sample VHAD must not exceed ±0.2° horizontally and ±0.1° vertically.
Thermal cycle test		The VHAD and an unlighted headlamp assembly are then placed in a circulating air environmental test chamber and exposed to a temperature of 60° ± 3°C for 24 hours, followed by a temperature of -40° ± 3°C for 24 hours, and are then permitted to return to room temperature.	After completion of the thermal cycle test the variation from correct aim shown by the sample VHAD must not exceed ±0.2° horizontally and ±0.1° vertically and the VHAD and headlamp assembly must show no damage which would impair its ability to perform as specified in this standard.
Corrosion test		The VHAD and headlamp assembly are then tested according to the headlamp corrosion test of this Table.	After completion of the corrosion test, the sample VHAD and headlamp must not have any observed corrosion that would result in the failure of any other applicable tests contained in this Table.
Photometry test		The VHAD and headlamp assembly are then tested for photometric compliance according to the procedure of S6.8.5.6 and for replacement units per S14.9.4.	The sample headlamp must comply with the appropriate photometric requirements of Table XIX and Table XVIII and with replacement units installed per S14.9.4.

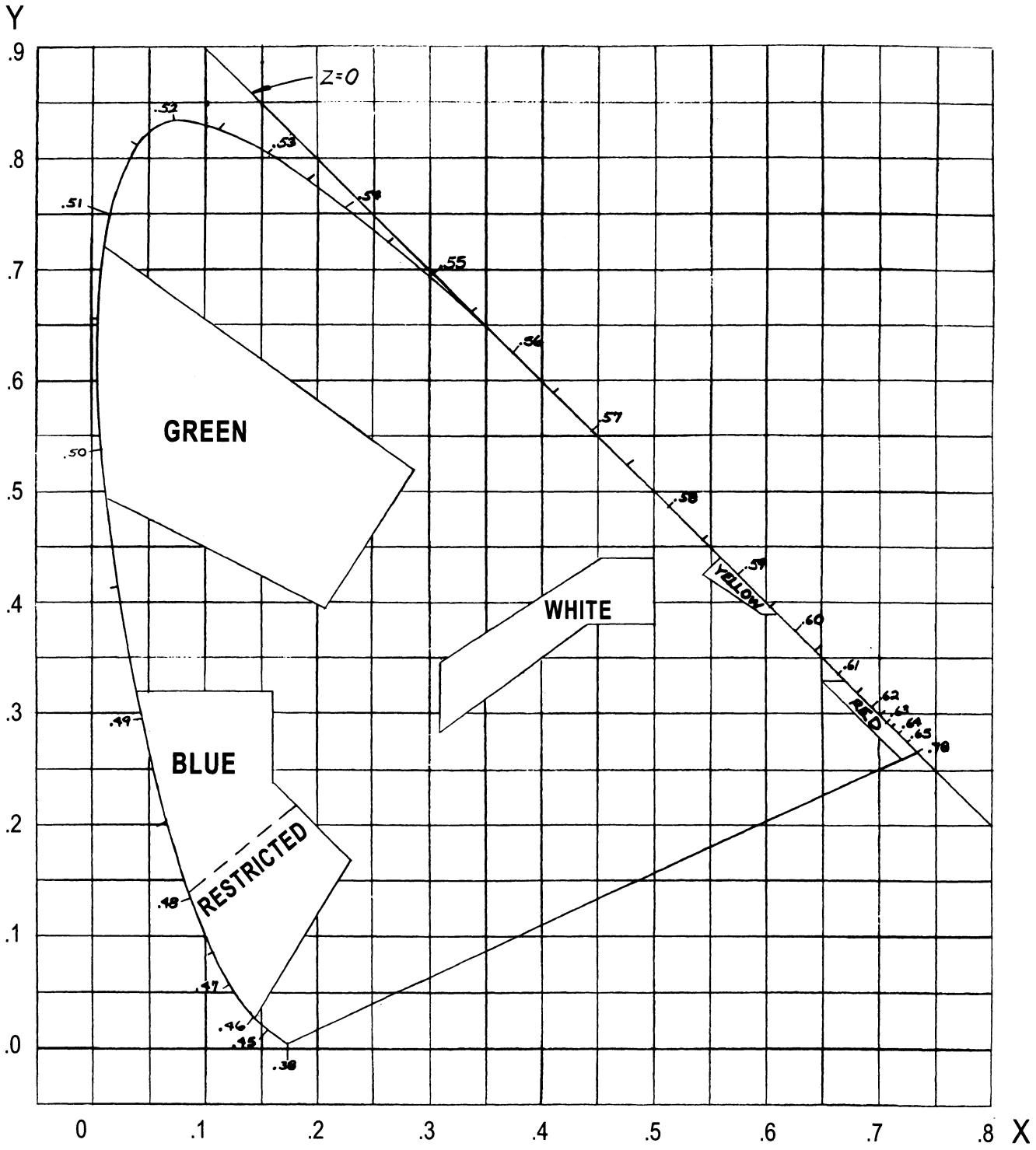

CHROMATICITY DIAGRAM

FIGURE 1

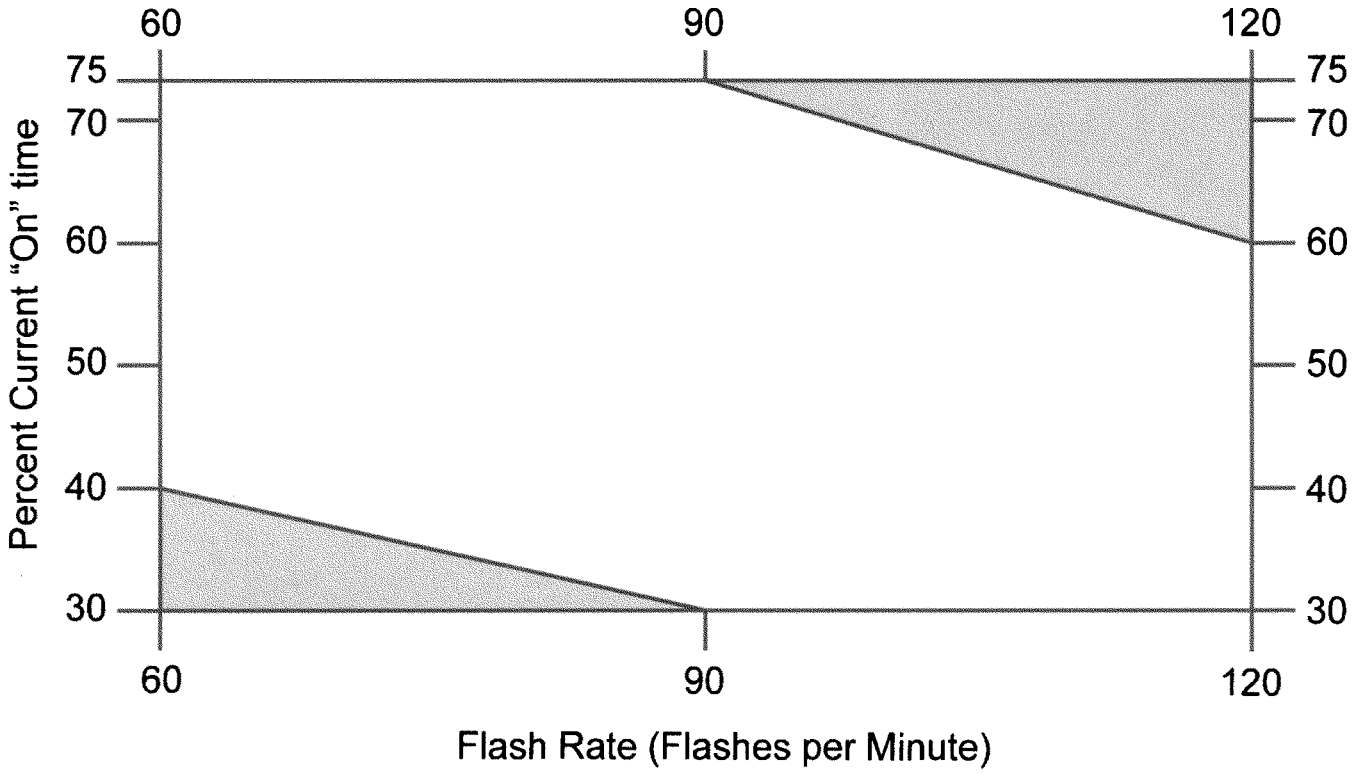

FLASHER PERFORMANCE CHART

FIGURE 2

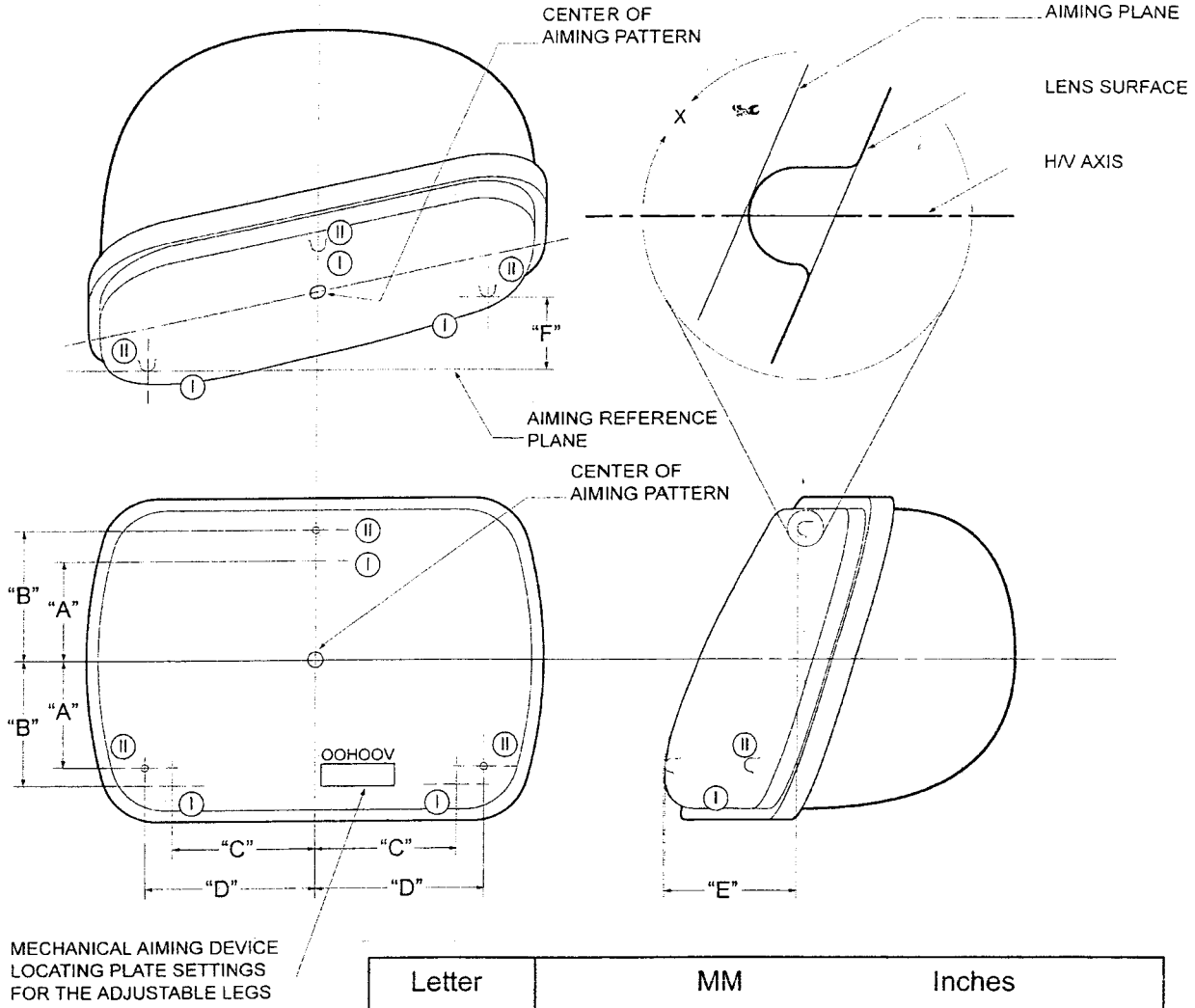

Notes:
Group I or Group II aiming pad locations may be used

Group I aiming pad location (front view) is that prescribed for 2B1 sealed beam units

Group II aiming pad location (front view) is that prescribed for 1A1/2A1 sealed beam units

Letter	MM	Inches
A	42.16 ± 0.25	1.660 ± 0.010
B	60.05 ± 1.00	2.364 ± 0.039
C	64.0 ± 1.00	2.520 ± 0.039
D	68.58 ± 0.51	2.700 ± 0.020
E	Mechanical aiming device locating plate setting for the vertical adjustable leg. (Millimeters)	
F	Mechanical aiming device locating plate setting for the horizontal adjustable leg. (Millimeters)	

FIGURE 3

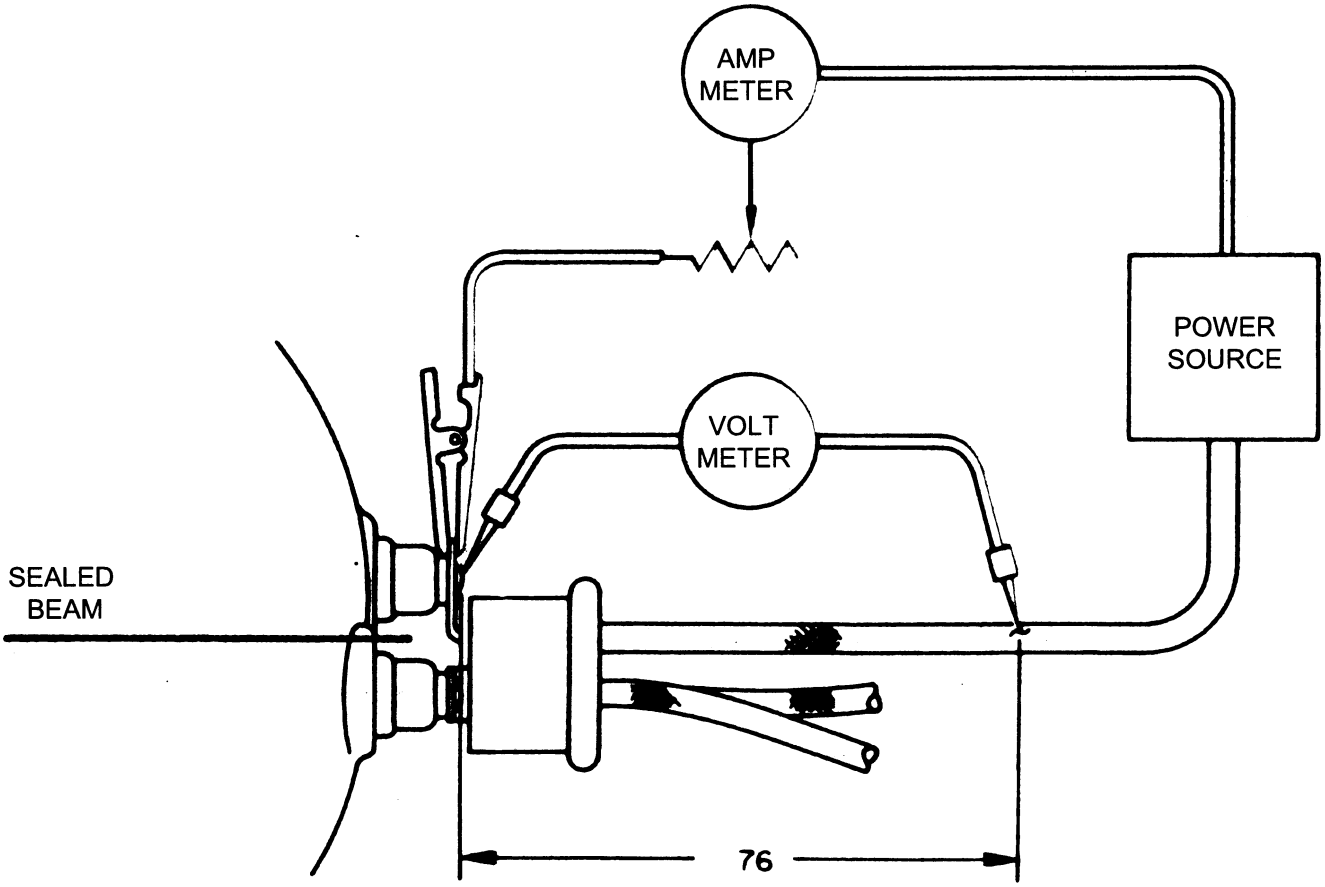

NOTE: DIMENSIONS ARE IN mm

HEADLAMP CONNECTOR TEST SETUP

FIGURE 4

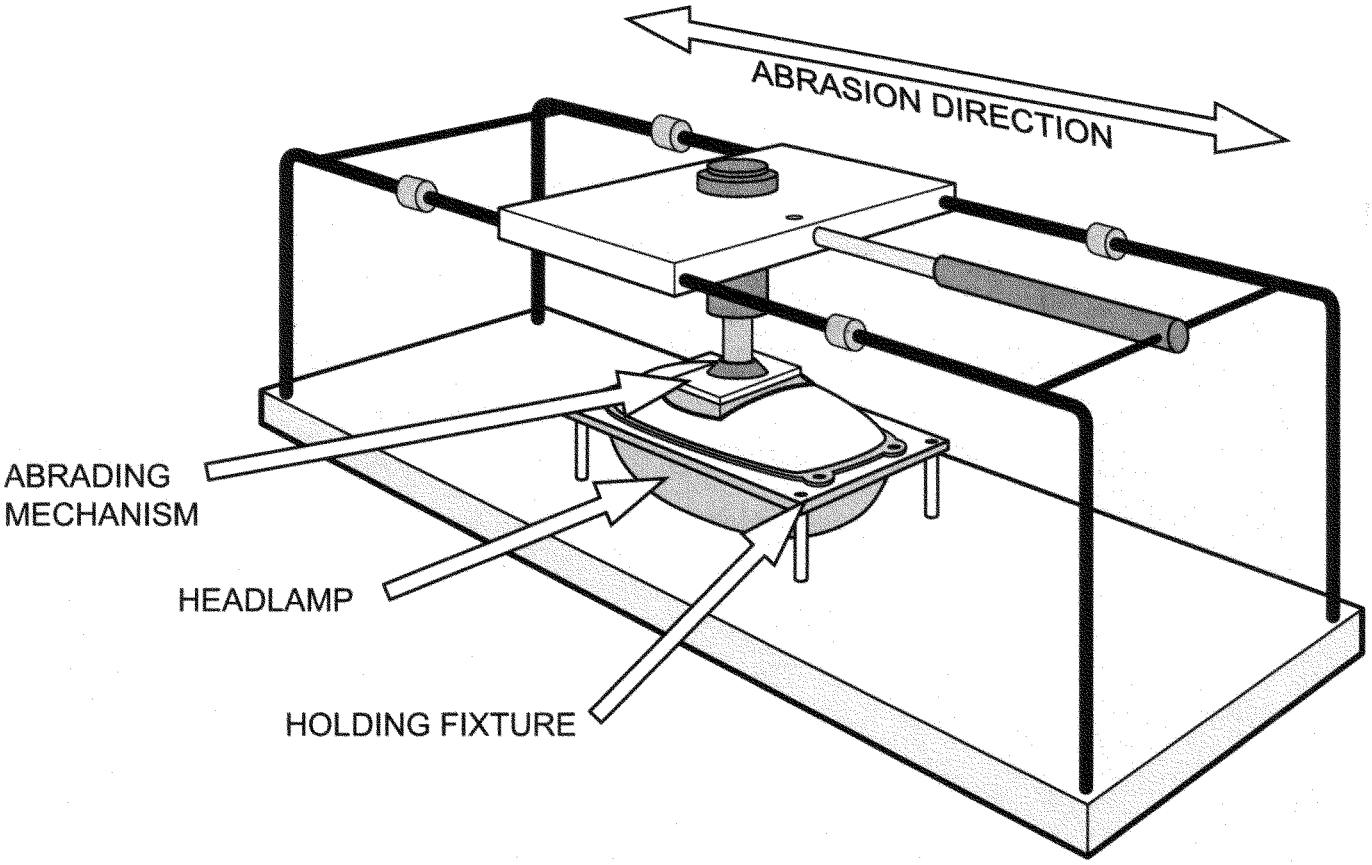

HEADLAMP ABRASION TEST FIXTURE

FIGURE 5

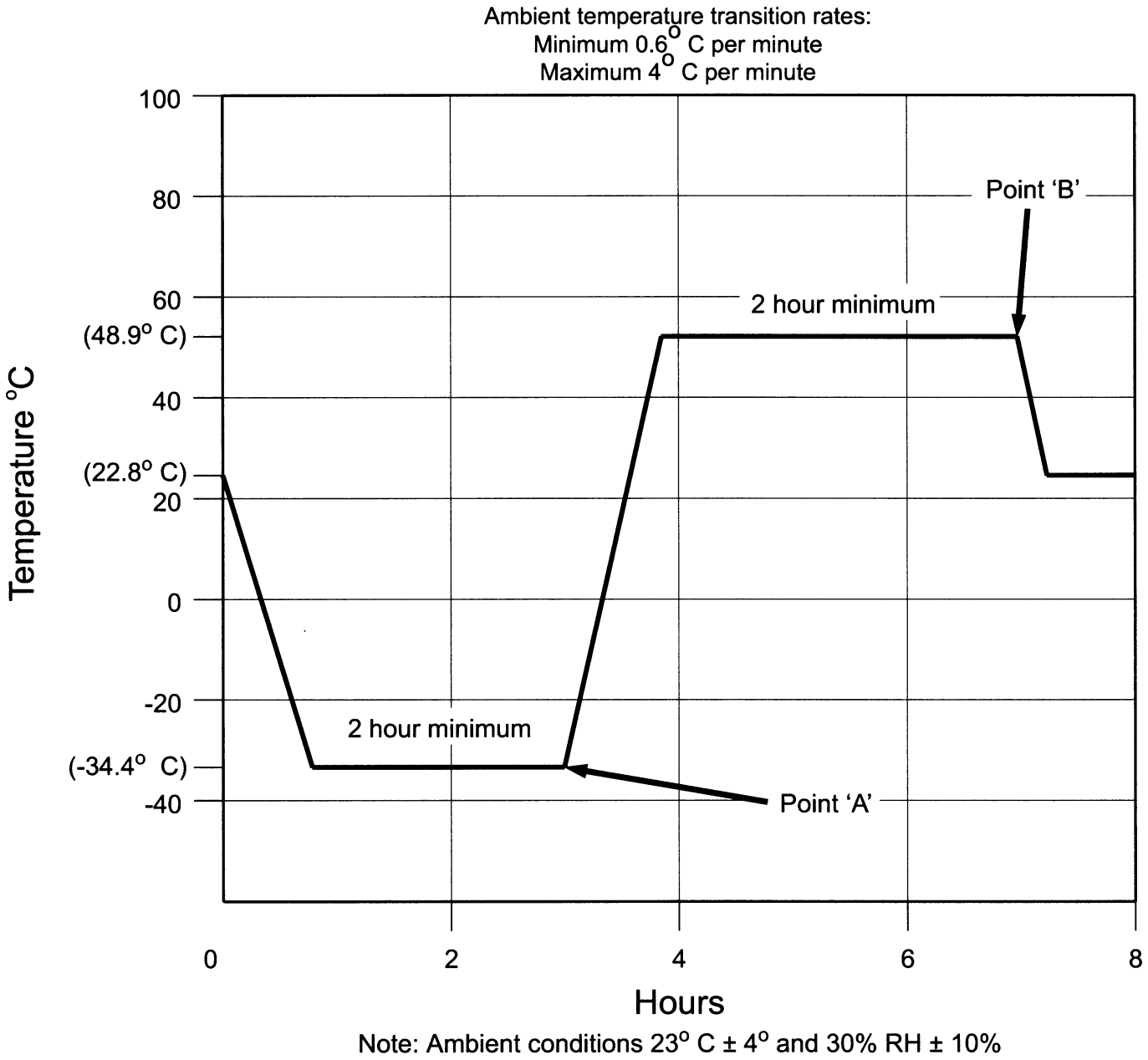

THERMAL CYCLE TEST PROFILE

FIGURE 6

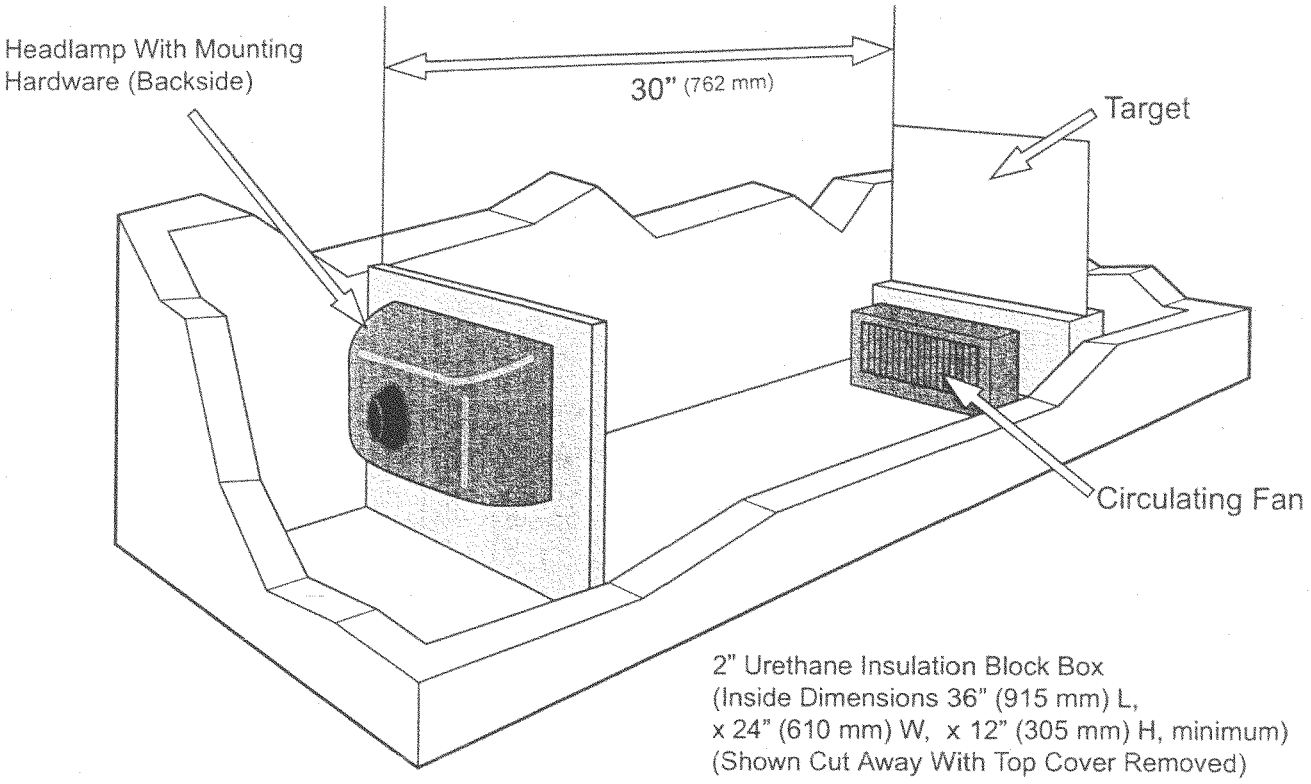

DIRT / AMBIENT TEST SETUP

FIGURE 7

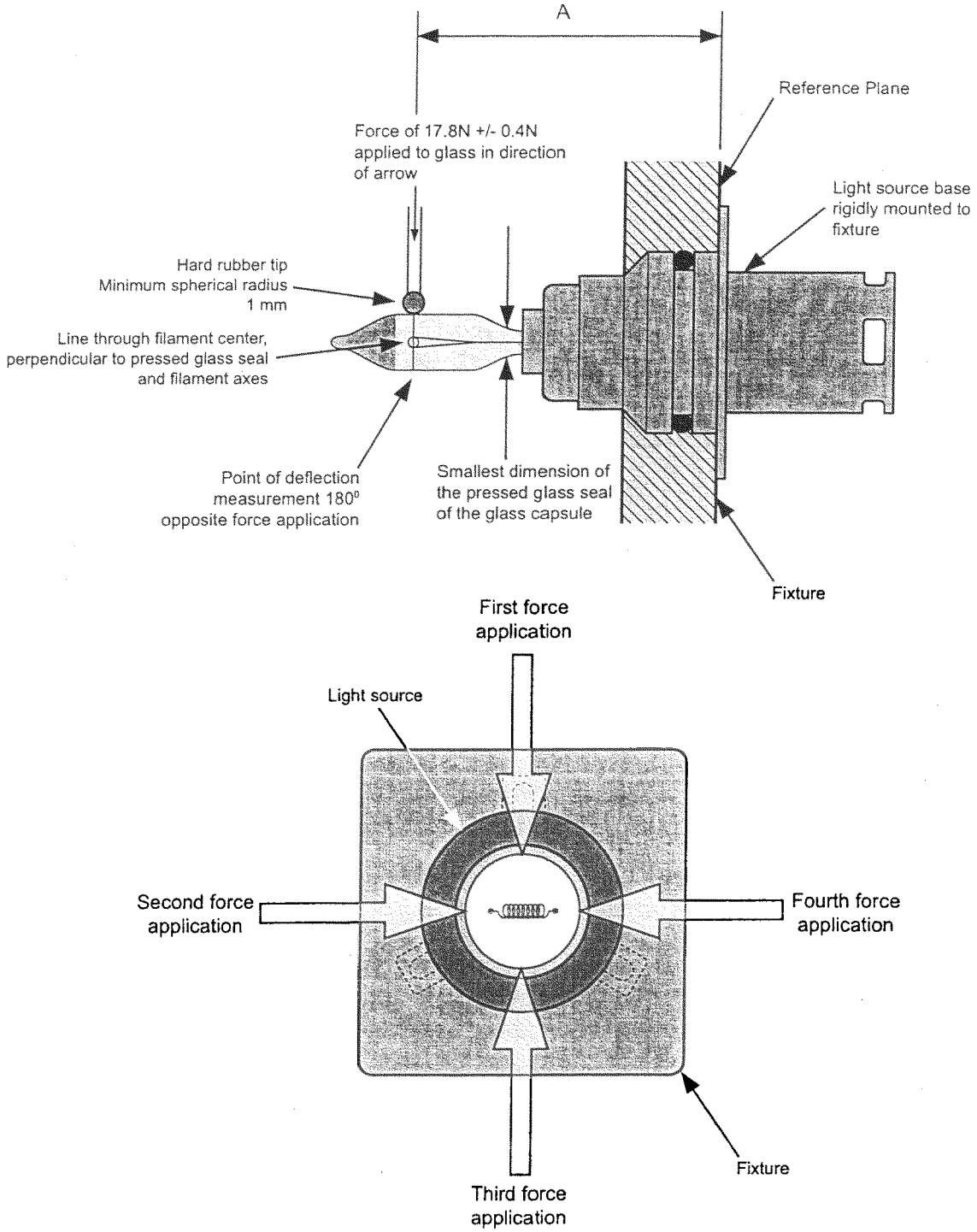

REPLACEABLE BULB DEFLECTION TEST SETUP

FIGURE 8

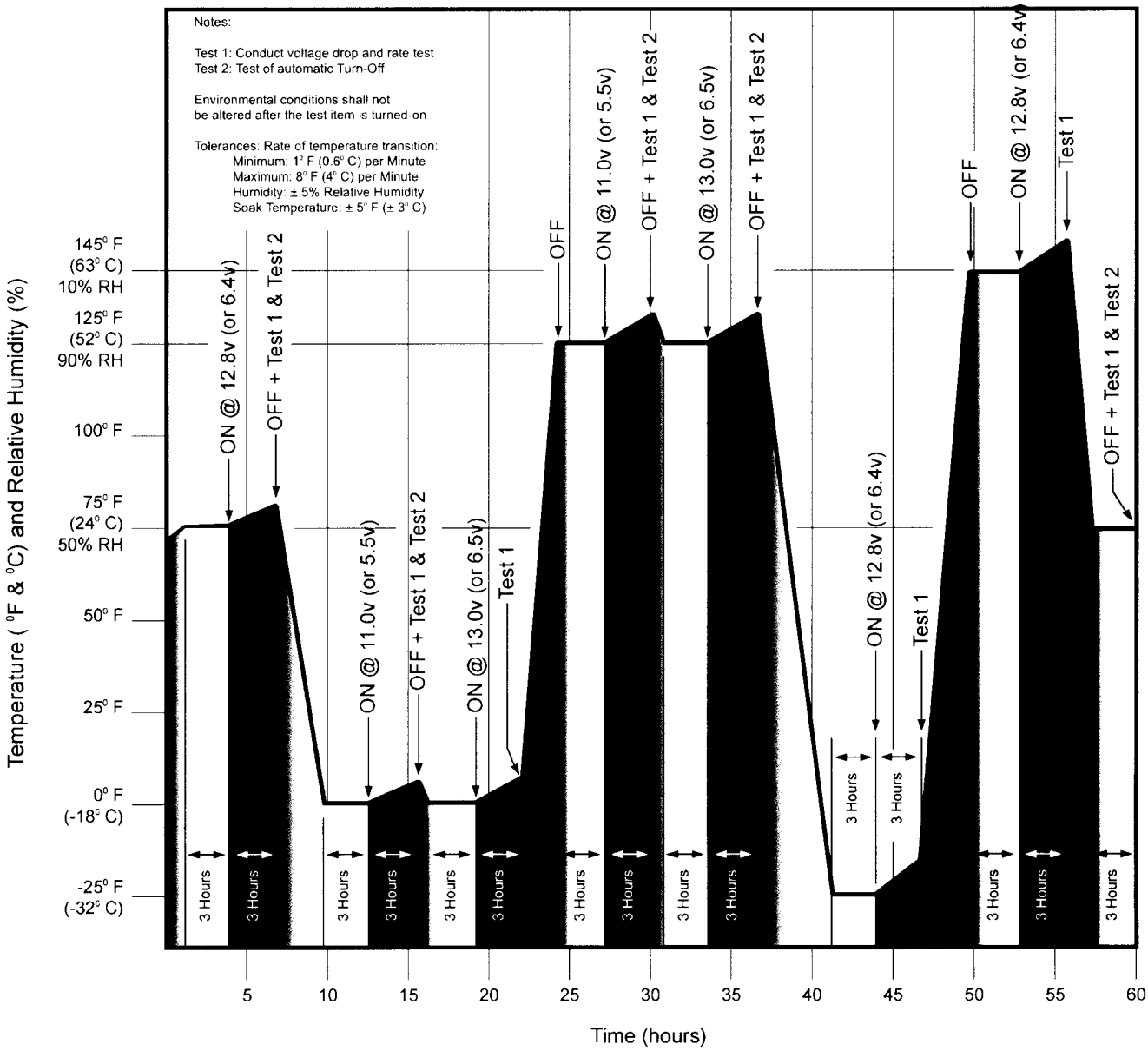

ENVIRONMENTAL TEST PROFILE

FIGURE 9

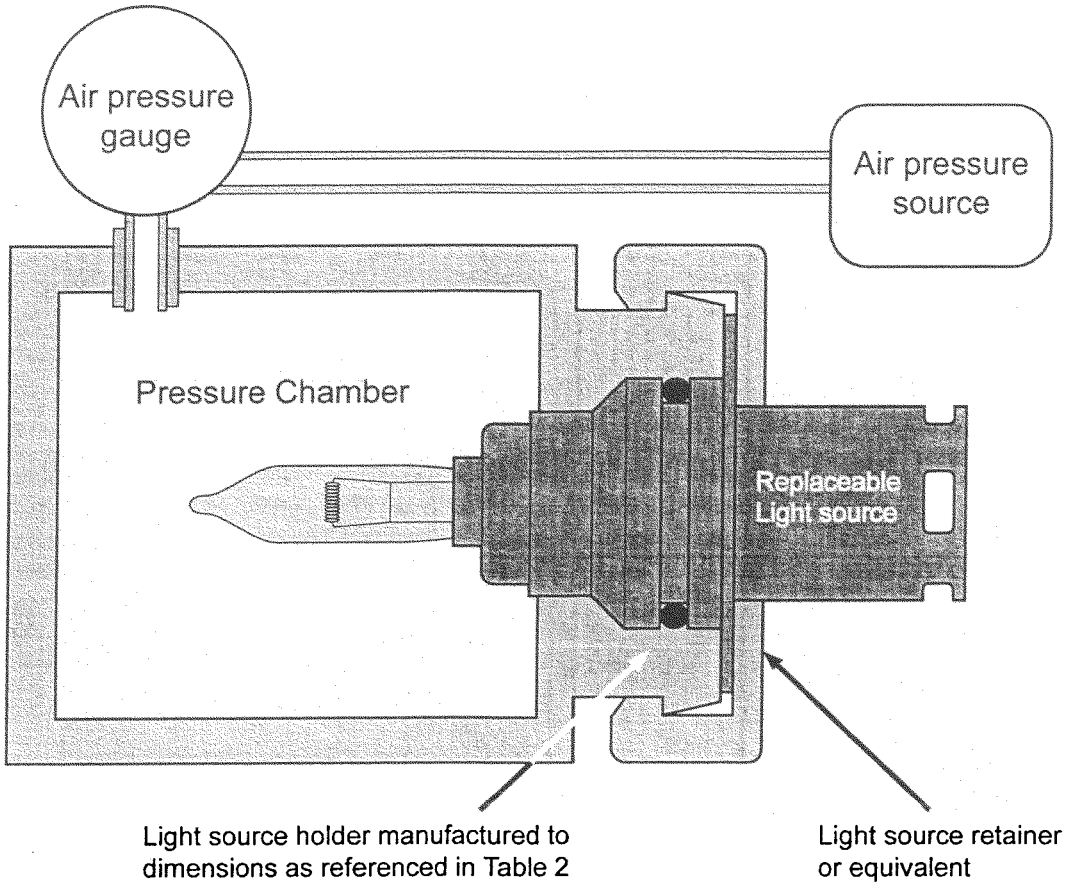

HEADLAMP REPLACEABLE BULB PRESSURE TEST SETUP

FIGURE 10

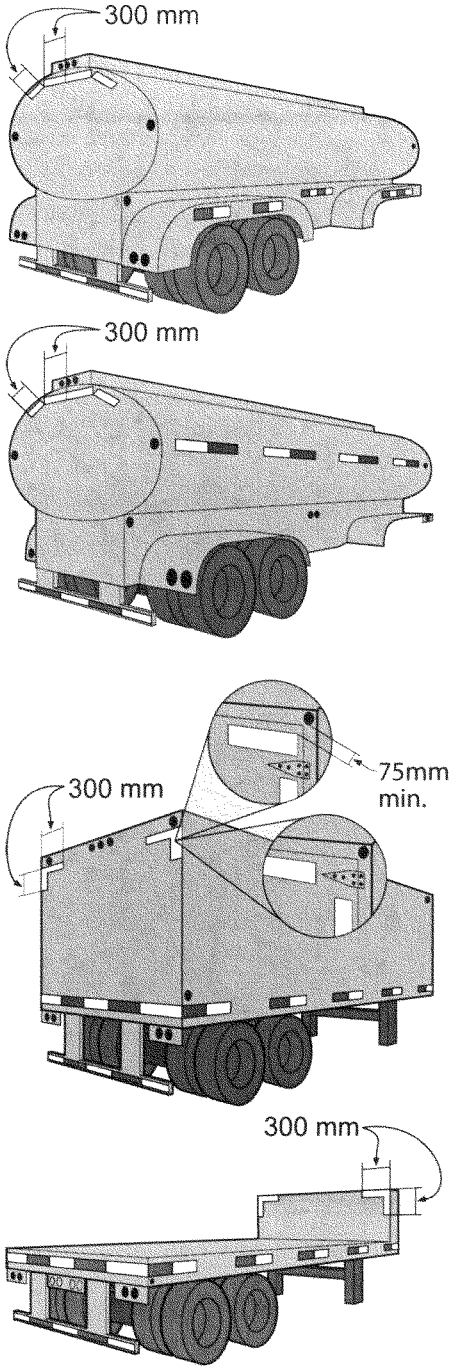

TRAILER CONSPICUITY
TREATMENT EXAMPLES

FIGURE 11

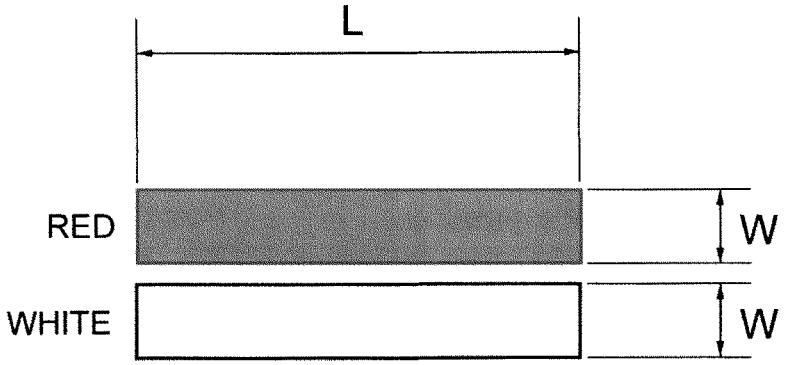

Grade DOT-C2 = 300 mm (±150 mm) L x 50 mm W Minimum
Grade DOT-C3 = 300 mm (±150 mm) L x 75 mm W Minimum
Grade DOT-C4 = 300 mm (±150 mm) L x 100 mm W Minimum

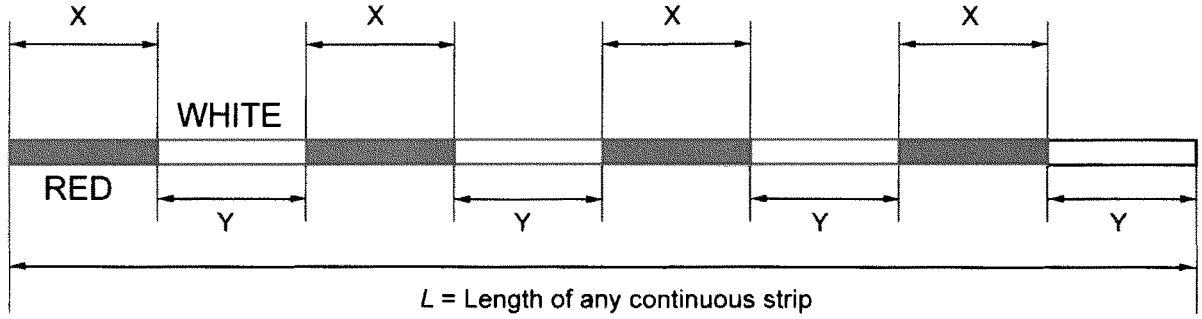

X + X + ... < 2/3 *L* and Y + Y + ... < 2/3 *L*

TRAILER CONSPICUITY DETAIL I

FIGURE 12-1

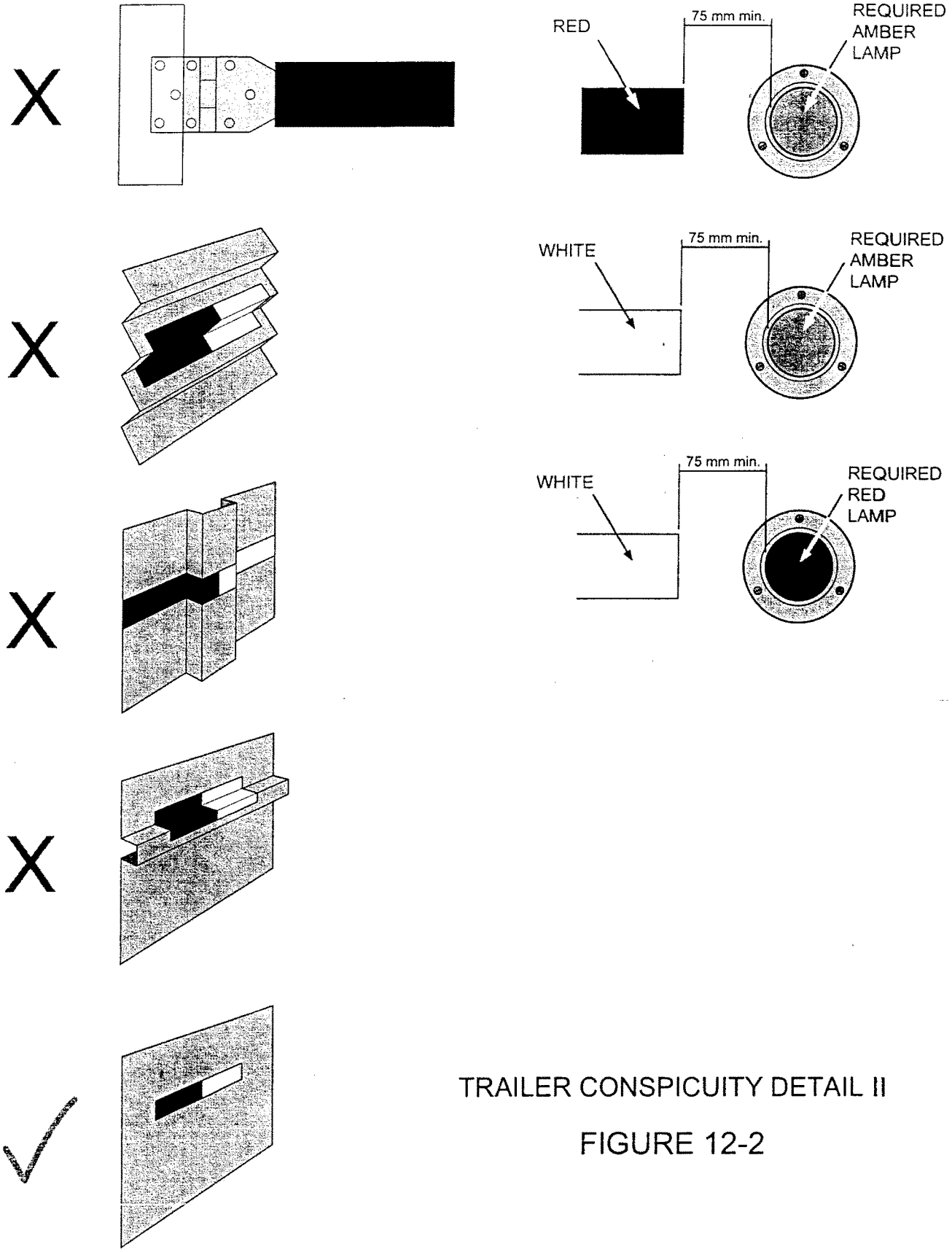

TRAILER CONSPICUITY DETAIL II

FIGURE 12-2

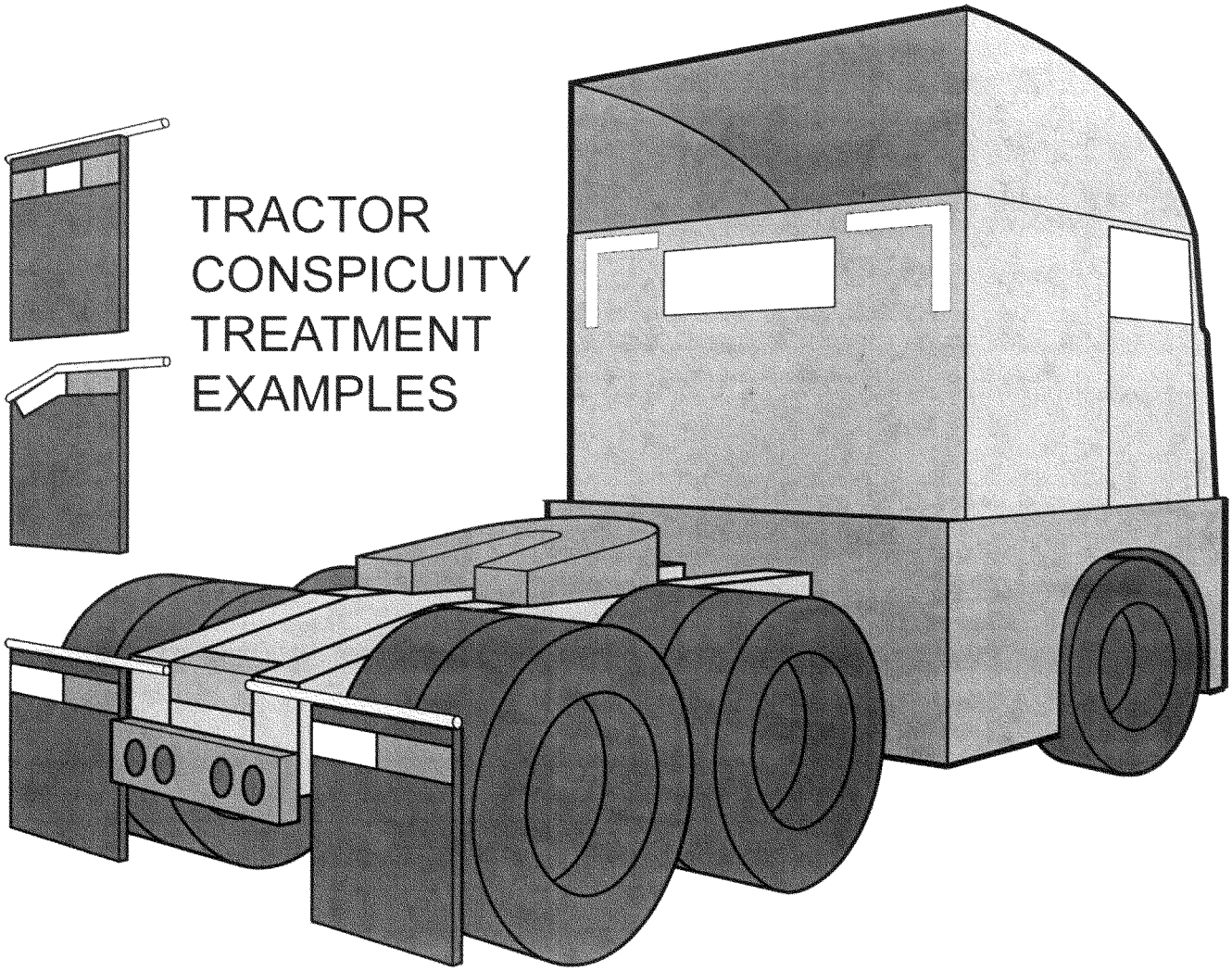

FIGURE 13

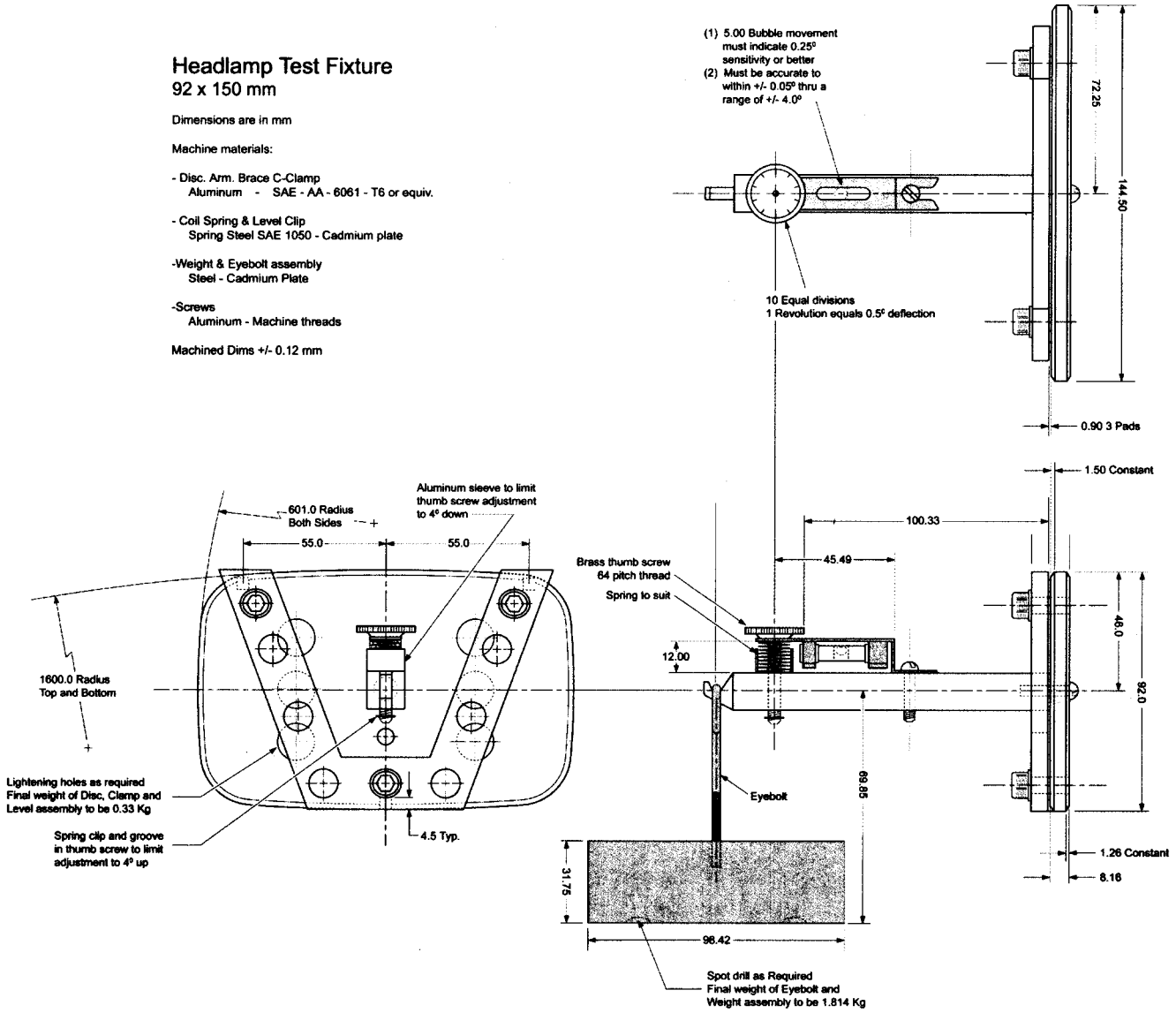

92 x 150 mm HEADLAMP AIM DEFLECTION TEST SETUP

FIGURE 14

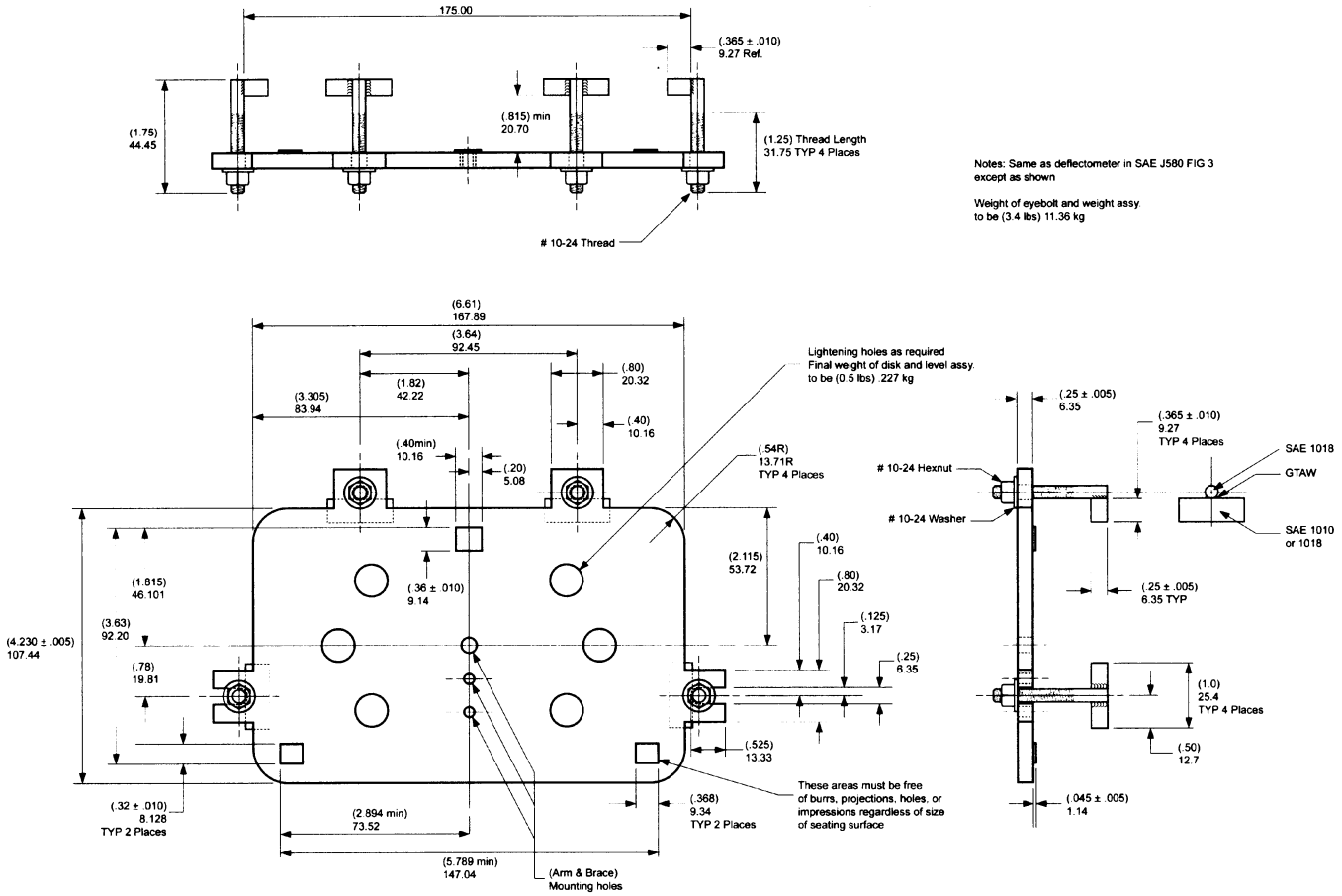

Dimensions are in (inches) mm

TYPES G AND H HEADLAMP AIM DEFLECTION TEST SETUP

FIGURE 15

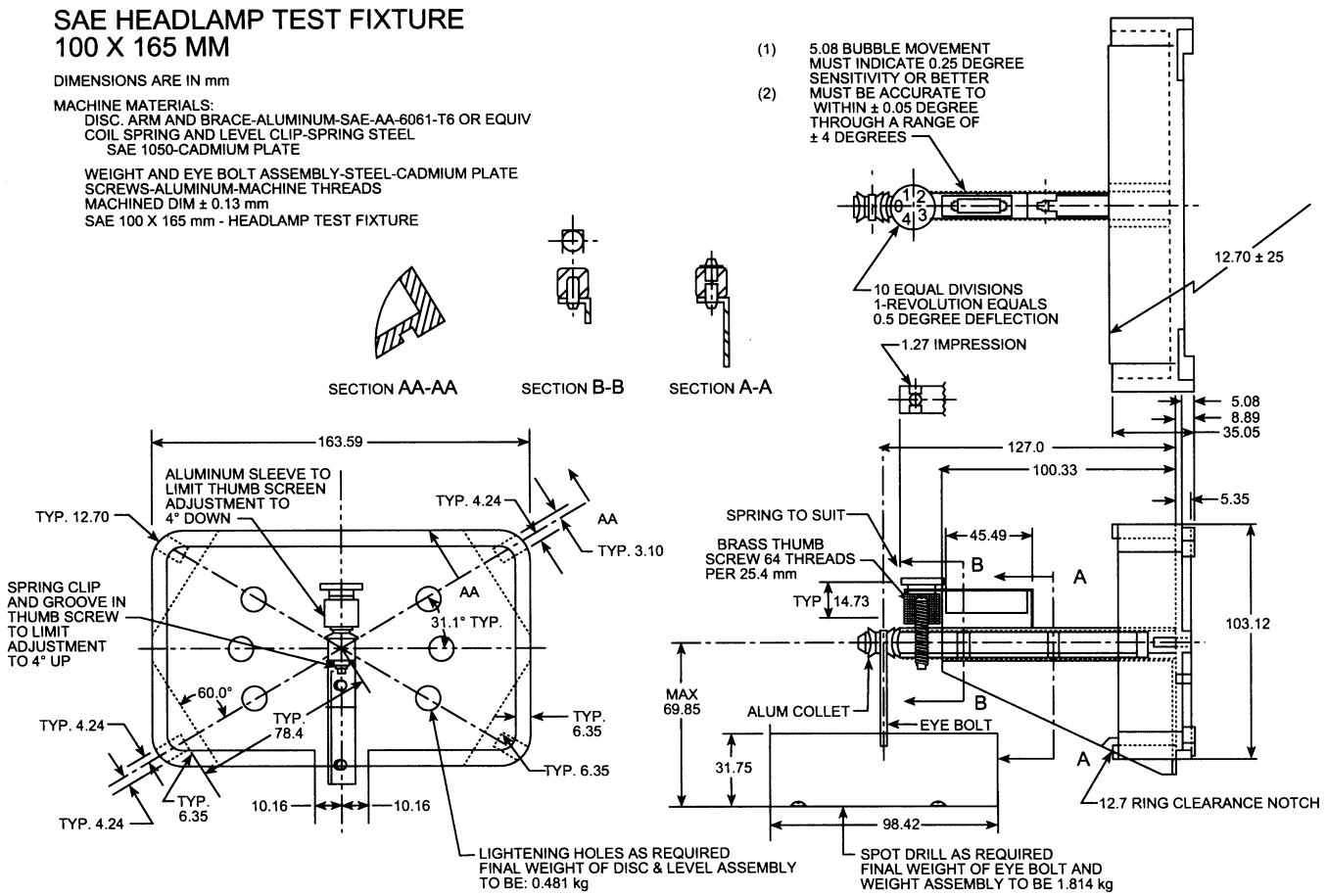

TYPES A AND E HEADLAMP AIM DEFLECTION TEST SETUP

FIGURE 16

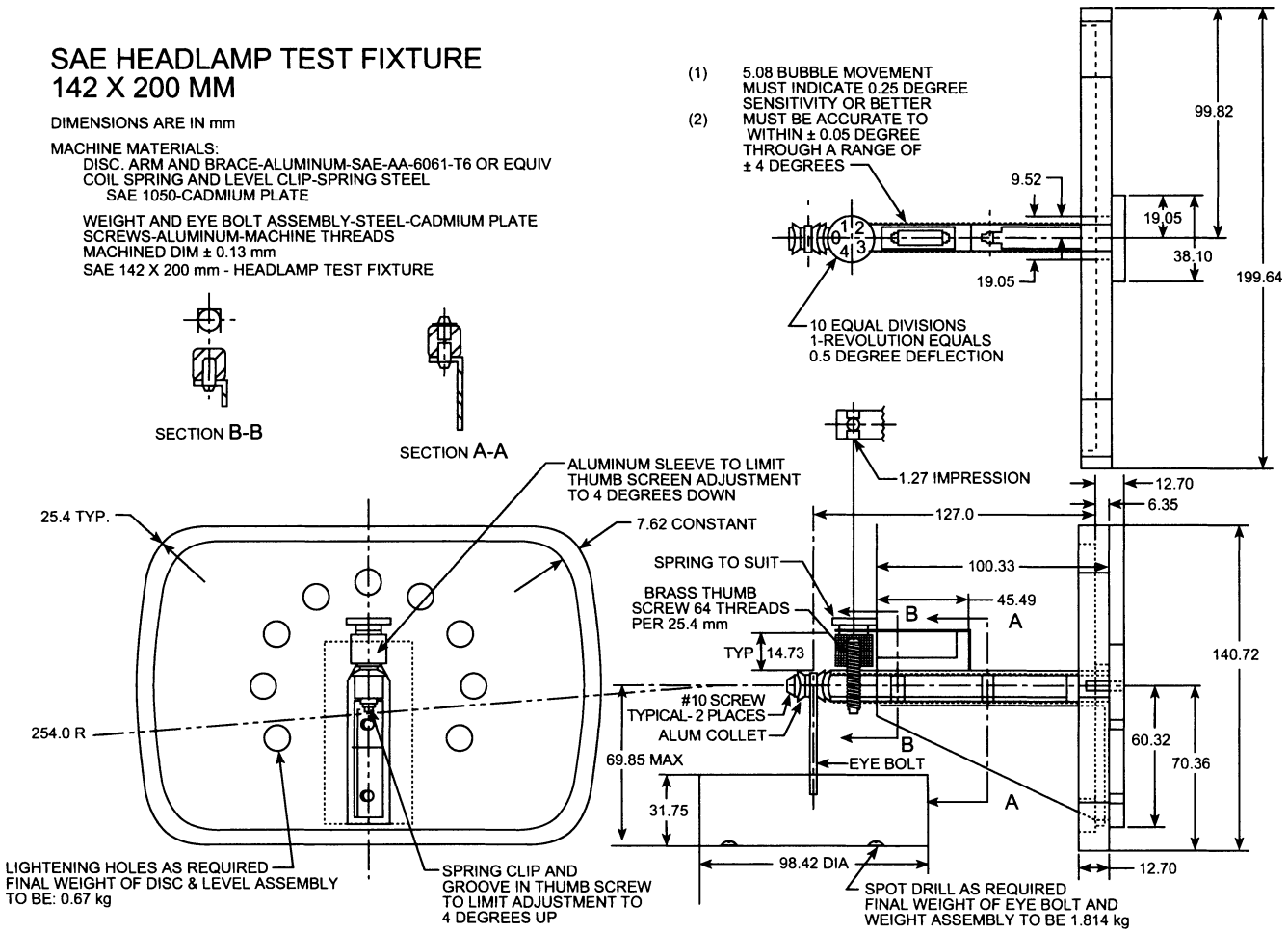

TYPE B HEADLAMP AIM DEFLECTION TEST SETUP

FIGURE 17

UNIT	A DIM	B DIM
SAE 5.75	144.53	134.62
SAE 7.00	178.31	168.66

DIMENSIONS ARE IN mm

MACHINE MATERIALS:
DISC. ARM AND BRACE-ALUMINUM-SAE-AA-6061-T6 OR EQUIV
COIL SPRING AND LEVEL CLIP-SPRING STEEL
SAE 1050-CADMIUM PLATE

WEIGHT AND EYE BOLT ASSEMBLY-STEEL-CADMIUM PLATE
SCREWS-ALUMINUM-MACHINE THREADS
MACHINED DIM ± 0.13 mm
SAE 146 AND SAE 178 - HEADLAMP TEST FIXTURE

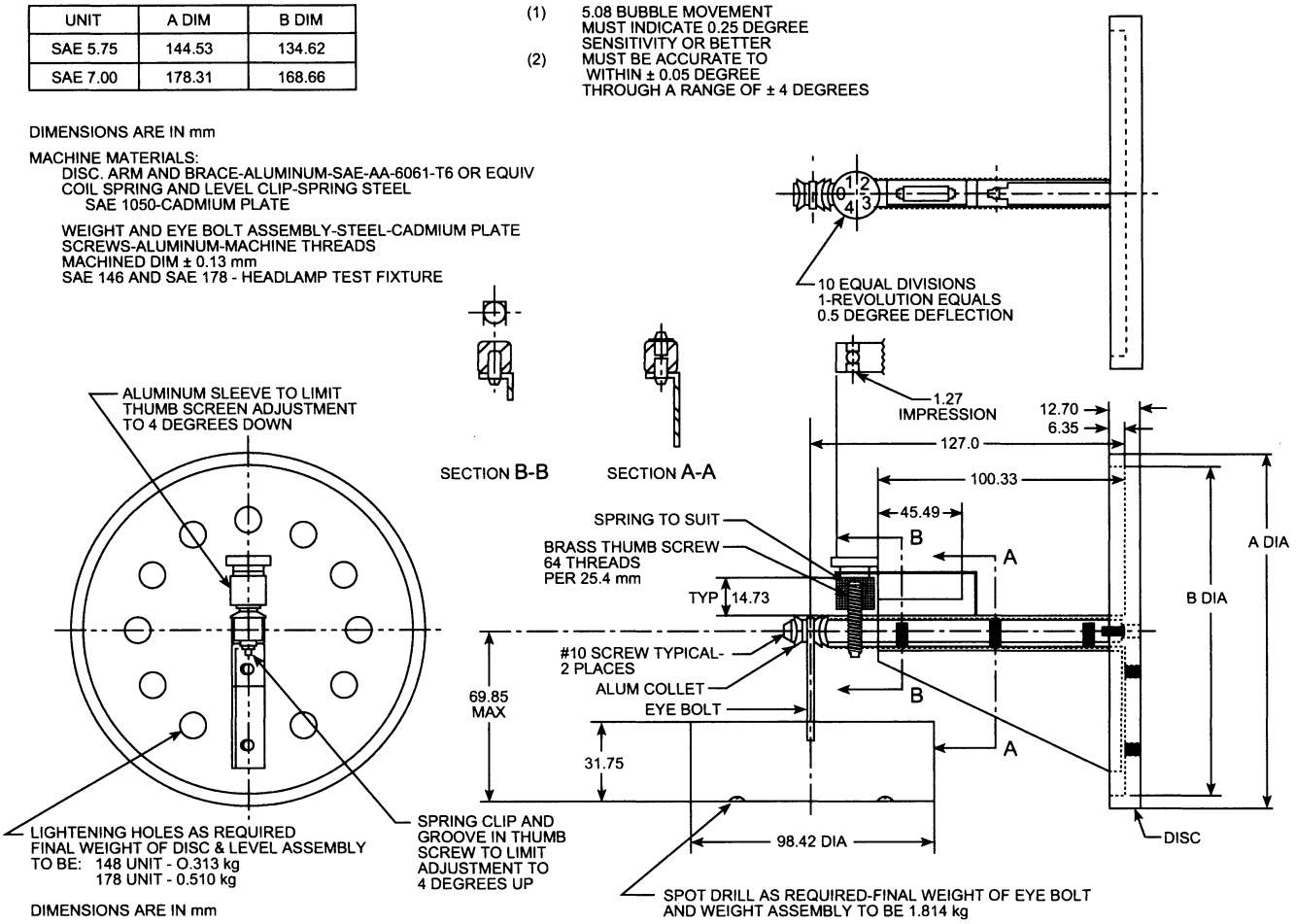

TYPES C AND D HEADLAMP AIM DEFLECTION TEST SETUP

FIGURE 18

BILLING CODE 4910–59–C

Appendix to § 571.108: Table Of Contents

571.108 Standard No. 108; Lamps, reflective devices, and associated equipment.
S1 Scope.
S2 Purpose.
S3 Application.
S4 Definitions.
S5 References to SAE publications.
S6 Vehicle requirements.
S6.1 Required lamps, reflective devices, and associated equipment by vehicle type.
S6.1.1 Quantity.
S6.1.1.1 Conspicuity systems.
S6.1.1.2 High-mounted stop lamps.
S6.1.1.3 Truck tractor rear turn signal lamps.
S6.1.1.4 Hazard warning lamps.
S6.1.2 Color.
S6.1.3 Mounting location and height.
S6.1.3.1 Mounting height.
S6.1.3.2 High-mounted stop lamp.
S6.1.4 License plate lamp.
S6.1.5 Activation.
S6.1.5.1 Stop lamp activation.
S6.2 Impairment.
S6.2.4 Daytime running lamps.
S6.2.5 Auxiliary identification lamps.
S6.3 Equipment combinations.
S6.4 Visibility and aiming.
S6.4.1 Effective projected luminous lens area.
S6.4.2 Visibility.
S6.4.3 Visibility options.
S6.4.4 SAE visibility alternative.
S6.4.5 Low-mounted lamps.
S6.4.6 School bus signal lamp aiming.
S6.5 Marking.
S6.5.1 DOT marking.
S6.5.2 DRL marking.
S6.6 Associated equipment.
S6.6.1 License plate holder.
S6.7 Replacement equipment.
S6.7.1 Design to conform.
S6.8 Physical tests.
S6.8.2 Samples for test.
S6.8.3 Laboratory facilities.
S6.8.4 Plastic optical materials.
S6.8.5 Photometric testing.
S6.8.5.1 Photometry measurements for all lamps except license lamps, headlamps, and DRLs.
S6.8.5.1.1 Location of test points.
S6.8.5.1.2 Multiple compartment and multiple lamp photometry.
S6.8.5.2 Bulbs.
S6.8.5.3 License plate lamp photometry.
S6.8.5.3.1 Illumination surface.
S6.8.5.3.2 Test stations.
S6.8.5.4 Reflex reflector photometry.
S6.8.5.4.1 Reflex reflector and retroreflective sheeting photometry measurements.
S6.8.5.4.1.1 Reflex reflector photometry measurement adjustments.
S6.8.5.5 Daytime running lamp (DRL) photometry measurements.
S6.8.5.6 Headlamp photometry measurements.
S6.8.5.6.1 Seasoning and test voltage.
S6.8.5.6.2 Aiming.
S6.8.5.6.3 Positioner.
S6.8.5.6.4 Photometer.
S6.8.5.6.5 Location of test points.
S6.8.5.6.6 Beam contributor photometry.
S7 Signal lamps, reflective devices, and associated equipment requirements.
S7.1 Turn signal lamps.
S7.1.1 Front turn signal lamps.
S7.1.1.1 Photometry.
S7.1.1.2 Spacing to other lamps.

S7.1.1.2.1 Spacing measurement for non-reflector lamps.
S7.1.1.2.2 Spacing measurement for lamps with reflectors.
S7.1.1.2.3 Spacing based photometric multipliers.
S7.1.1.3 Multiple compartments and multiple lamps.
S7.1.1.3.1 Lamps installed on vehicles 2032 mm. or more in overall width.
S7.1.1.3.2 Ratio to parking lamps and clearance lamps.
S7.1.2 Rear turn signal lamps.
S7.1.2.1 Photometry.
S7.1.2.2 Multiple compartments and multiple lamps.
S7.1.2.2.1 Lamps installed on vehicles 2032 mm. or more in overall width.
S7.1.2.3 Ratio to taillamps and clearance lamps.
S7.1.3 Physical tests.
S7.1.4 Combined lamp bulb indexing.
S7.2 Taillamps.
S7.2.1 Photometry.
S7.2.1.1 Multiple compartments and multiple lamps.
S7.2.1.1.1 Taillamps installed on vehicles 2032 mm .or more in overall width.
S7.2.2 Physical tests.
S7.3 Stop lamps.
S7.3.1 Photometry.
S7.3.1.1 Multiple compartments and multiple lamps.
S7.3.1.1.1 Lamps installed on vehicles 2032 mm. or more in overall width.
S7.3.1.2 Ratio to taillamps.
S7.3.2 Physical tests.
S7.3.3 Combined lamp bulb indexing.
S7.4 Side marker lamps.
S7.4.1 Photometry.
S7.4.1.1 Inboard photometry.
S7.4.2 Physical tests.
S7.5 Clearance and identification lamps.
S7.5.1 Photometry.
S7.5.2 Physical tests.
S7.6 Backup lamps.
S7.6.1 Photometry.
S7.6.2 Color.
S7.6.3 Physical tests.
S7.7 License plate lamps.
S7.7.1 Installation.
S7.7.1.1 Incident light from single lamp.
S7.7.1.2 Incident light from multiple lamps.
S7.7.2 Photometry.
S7.7.3 Physical tests.
S7.8 Parking lamps.
S7.8.1 Photometry.
S7.8.2 Physical tests.
S7.9 High mounted stop lamps.
S7.9.1 Accessibility.
S7.9.2 Interior mounting.
S7.9.3 Photometry.
S7.9.4 Physical tests.
S7.10 Reflex reflectors.
S7.10.1 Photometry.
S7.10.1.1 Alternative side reflex reflector.
S7.10.2 Physical tests.
S7.11 Daytime running lamps (DRL).
S7.11.1 Photometry.
S7.11.2 Spacing to turn signal lamps.
S7.11.3 Physical tests.
S7.12 Conspicuity systems.
S7.12.1 Retroreflective sheeting.
S7.12.1.1 Certification marking.
S7.12.1.2 Photometry.
S7.12.2 Conspicuity reflex reflectors.
S7.12.2.1 Certification marking.
S7.12.2.2 Photometry.
S7.13 School bus signal lamps.
S7.13.1 Photometry.
S7.13.2 Physical tests.
S7.14 Associated equipment.
S7.14.1 Turn signal operating unit.
S7.14.2 Turn signal flasher.
S7.14.3 Turn signal pilot indicator.
S7.14.3.1 Indicator size and color.
S7.14.3.2 Turn signal lamp failure.
S7.14.4 Headlamp beam switching device.
S7.14.4.1 Semi-automatic headlamp beam switching device.
S7.14.4.1.1 Operating instructions.
S7.14.4.1.2 Manual override.
S7.14.4.1.3 Fail-safe operation.
S7.14.4.1.4 Automatic dimming indicator.
S7.14.4.1.5 Lens accessibility.
S7.14.4.1.6 Mounting height.
S7.14.5 Upper beam headlamp indicator.
S7.14.5.1 Indicator size and location.
S7.14.6 Vehicular hazard warning signal operating unit.
S7.14.6.1 Operating unit switch.
S7.14.7 Vehicular hazard warning signal flasher.
S7.14.8 Vehicular hazard warning signal pilot indicator.
S7.14.8.1 Indicator size and color.
S8 Headlighting system requirements.
S8.1 Headlighting systems.
S8.1.1 Headlighting system type.
S8.1.2 Headlamp category.
S8.1.3 Vertical headlamp arrangement.
S8.1.4 Horizontal headlamp arrangement.
S8.1.5 Headlamp adjustments.
S8.2 Simultaneous beam activation.
S9 Sealed beam headlamp requirements.
S9.1 Installation.
S9.2 Simultaneous aim.
S9.3 Photometry.
S9.4 Physical tests.
S10 Integral beam headlamp requirements.
S10.1 Installation.
S10.2 Aimability.
S10.3 Simultaneous aim.
S10.4 Markings.
S10.5 Additional light sources.
S10.6 Photometry.
S10.7 Physical tests.
S11 Replaceable light source headlamp requirements.
S11.1 Installation.
S11.2 Aiming restrictions.
S11.3 Additional light sources.
S11.4 Replacement equipment.
S11.5 Markings.
S11.6 Photometry.
S11.7 Physical tests.
S12 Combination headlamp requirements.
S12.1 Installation.
S12.2 Photometry.
S12.3 Physical tests.
S13 Motorcycle headlamp requirements.
S13.1 Headlamp installation.
S13.1.1 Single headlamp.
S13.1.2 Two headlamps with both beams.
S13.1.3 Two headlamps, upper beam and lower beam.
S13.2 Photometry.
S13.3 Physical tests.
S13.4 Motorcycle replaceable bulb headlamp marking.
S13.5 Motorcycle headlamp modulation system.
S13.5.1 Modulation.
S13.5.2 Replacement modulators.
S13.5.2.1 Replacement performance.
S13.5.2.2 Replacement instructions.
S14 Aimability performance requirements.
S14.1 Headlamp mounting and aiming.
S14.2 Headlamp obstructions.
S14.3. Headlamp aiming systems.
S14.4 Aim adjustment interaction.
S14.5 Horizontal adjustment—visually aimed headlamp.
S14.6 Optical axis marking.
S14.6.1 Optical axis marking—vehicle.
S14.6.2 Optical axis marking—lamp.
S14.6.3 Optical axis marking—visual aim headlamp.
S14.7 Moveable reflectors.
S14.8 External aiming.
S14.8.1 Headlamp aiming device locating plates.
S14.8.2 Nonadjustable headlamp aiming device locating plates.
S14.9 On-vehicle aiming.
S14.9.1 Aim.
S14.9.1.1 Vertical aim.
S14.9.1.2 Horizontal aim.
S14.9.2 Aiming instructions.
S14.9.3 Permanent calibration.
S14.9.4 Replacement units.
S14.9.5 Physical tests.
S14.10 Visual/optical aiming.
S14.10.1 Vertical aim, lower beam.
S14.10.1.1 Vertical position of the cutoff.
S14.10.1.2 Vertical gradient.
S14.10.1.3 Horizontal position of the cutoff.
S14.10.1.4 Maximum inclination of the cutoff.
S14.10.1.5 Measuring the cutoff parameter.
S14.10.2 Horizontal aim, lower beam.
S14.10.3 Vertical aim, upper beam.
S14.10.4 Horizontal aim, upper beam.
S14.10.5 Photometric measurements.
S14.10.6 Visual/optical identification marking.
S15 Replaceable light source requirements
S15.1 Markings.
S15.2 Power and flux measurement.
S15.3 Power and flux measurement.
S15.4 Ballast markings.
S15.5 Gas discharge laboratory life.
S15.6 Physical tests.
S16 Headlamp concealment device requirements.
S16.7 Certification election.
S17 Headlamp marking requirements.
S17.1 Trademark.
S17.2 Voltage and trade number.
S17.3 Sealed beam headlamp markings.
S17.4 Replaceable bulb headlamp markings.
S17.5 Additional headlamp markings.
S18 Replaceable headlamp lens requirements.

Issued: December 20, 2005.

Stephen R. Kratzke,

Associate Administrator for Rulemaking.

Note: The following appendices will not appear in the Code of Federal Regulations.

BILLING CODE 4910–59–P

APPENDIX A:
FMVSS 108 REWRITE
CROSS REFERENCE

CURRENT FMVSS 108 OR INCORPORATED DOCUMENT CITATION	FMVSS 108 REWRITE CITATION
S1	S1 Scope
S2	S2 Purpose
S3 (except section citation)	S3 Application
S4	S4 Definitions
S5.1.1	S6.1.1 Quantity
S5.1.1	S6.6 Associated equipment
S5.1.1.1	S6.1.1.3 Truck tractor rear turn signal lamps
S5.1.1.1	Table I Number and color
S5.1.1.1	Table VII Footnote 6
S5.1.1.2	Table I Number and color
S5.1.1.3	S7.4.1.1 Side marker lamp inboard photometry
S5.1.1.3	Table I Number and color-Intermediate sidemarker lamps
S5.1.1.4	S7.10.1.1 Alternative side reflex reflectors
S5.1.1.4	Table I Lighting device
S5.1.1.5	S7.14.1 Turn signal operating unit
S5.1.1.6	S7.2.1 Taillamp photometry
S5.1.1.6	S7.8.1 Parking lamp photometry
S5.1.1.6	Table VIII Footnote 2
S5.1.1.6	Table XIV Footnote 2
S5.1.1.7	S7.1.1.1 Front turn signal lamp photometry
S5.1.1.7	S7.1.2.1 Rear turn signal lamp photometry
S5.1.1.8	S7.4.1 Inboard photometry requirements
S5.1.1.8	Table X Footnote 1
S5.1.1.9	Table I Number and color-Clearance lamp
S5.1.1.10	S6.1.1 Quantity
S5.1.1.10	Table I Number and color
S5.1.1.11	S4 Definitions-Optically combined
S5.1.1.11	S6.1.5 Activation
S5.1.1.11	Table I Activation-Stop lamps
S5.1.1.12	S7.1.1.3.1 Lamps installed on vehicles 2032 mm or more in overall width
S5.1.1.12	S7.1.2.2.1 Lamps installed on vehicles 2032 mm or more in overall width
S5.1.1.12	S7.3.1.1.1 Lamps installed on vehicles 2032 mm or more in overall width
S5.1.1.13	Table XXI Turn signal operating unit-Durability test
S5.1.1.14	Table I Number and color
S5.1.1.15	Table I Number and color
S5.1.1.16	S6.8.5.2.1 Bulbs without MSCD
S5.1.1.17	S6.8.5.2 Bulbs
S5.1.1.18	Table XII Single backup lamp system-Individual point photometry
S5.1.1.18	Table XII Two backup lamp system-Individual point photometry
S5.1.1.18	Table XII Footnote 4
S5.1.1.19	Table XXI Turn signal flasher-Starting time test
S5.1.1.19	Table XXI Turn signal flasher-Flash rate and percent current "on" time test
S5.1.1.20	Table XXI Turn signal flasher-Voltage drop test
S5.1.1.20	Table XXI Vehicular hazard warning signal flasher-Voltage drop test
S5.1.1.21	Table I Number and color
S5.1.1.22	S6.4.1 Effective projected luminous lens area
S5.1.1.22	Table IV Stop lamp-Effective projected luminous lens area
S5.1.1.22	Table IV Footnote 1
S5.1.1.22	Table IX Motor driven cycle stop lamp zone photometry
S5.1.1.22	Table IX Footnote 5
S5.1.1.22	S7.3.1 Stop lamp photometry
S5.1.1.25	S6.4.1 Effective projected luminous lens area

APPENDIX A: FMVSS 108 REWRITE CROSS REFERENCE

CURRENT FMVSS 108 OR INCORPORATED DOCUMENT CITATION	FMVSS 108 REWRITE CITATION
S5.1.1.25	Table IV Front turn signal lamp-Effective projected luminous lens area
S5.1.1.25	Table IV Rear turn signal lamp-Effective projected luminous lens area
S5.1.1.26(a)	S6.4.1 Effective projected luminous lens area
S5.1.1.26(a)	Table IV Rear turn signal lamp-Effective projected luminous lens area
S5.1.1.26(a)	Table IV Stop lamp-Effective projected luminous lens area
S5.1.1.26(b)	S6.4.1 Effective projected luminous lens area
S5.1.1.26(b)	Table IV Rear turn signal lamp-Effective projected luminous lens area
S5.1.1.26(b)	Table IV Stop lamp-Effective projected luminous lens area
S5.1.1.27(a)	S6.1.1.2 High mounted stop lamp
S5.1.1.27(a)	Table I Lighting device
S5.1.1.27(a)(1)	S6.4.1 Effective projected luminous lens area
S5.1.1.27(a)(1)	Table IV High mounted stop lamp-Effective projected luminous lens area
S5.1.1.27(a)(2)	Table V HMSL-Visibility
S5.1.1.27(a)(3)	S7.9.2 High mounted stop lamp photometry
S5.1.1.27(a)(4)	S7.9.3 High mounted stop lamp physical tests
S5.1.1.27(a)(5)	S7.9.1 High mounted stop lamp accessibility
S5.1.1.27(b)	S6.1.1.2 High mounted stop lamp
S5.1.1.27(b)	Table I Lighting device
S5.1.1.27(b)(1)	S6.1.1.2 High mounted stop lamp
S5.1.1.27(b)(1)	S6.4.1 Effective projected luminous lens area
S5.1.1.27(b)(1)	Table IV High mounted stop lamp-Effective projected luminous lens area
S5.1.1.27(b)(2)	Table V HMSL-Visibility
S5.1.1.27(b)(3)	S7.9.2 High mounted stop lamp photometry
S5.1.1.27(b)(3)	Table XV Footnote 3
S5.1.1.27(b)(4)	S7.9.1 High mounted stop lamp accessibility
S5.1.1.29	S6.1.1.1.1 Conspicuity and reflex
S5.1.1.29	S7.10.1.1 Alternative side reflex reflectors
S5.1.2	S6.8.4 Plastic optical materials
S5.1.2	S7.1.3 Turn Signal lamp physical test requirements
S5.1.2	S7.2.2 Taillamp physical tests
S5.1.2	S7.3.2 Stop lamp physical tests
S5.1.2	S7.4.2 Side marker lamp physical tests
S5.1.2	S7.5.2 Clearance and identification lamp physical tests
S5.1.2	S7.6.3 Backup lamp physical tests
S5.1.2	S7.7.3 License plate lamp physical tests
S5.1.2	S7.8.2 Parking lamp physical tests
S5.1.2	S7.9.3 High mounted stop lamp physical tests
S5.1.2	S7.10.2 Reflex reflector physical tests
S5.1.2	S7.11.3 Daytime running lamp (DRL) physical tests
S5.1.2	S9.4 Sealed beam headlamp physical tests
S5.1.2	S10.7 Integral beam headlamp physical tests
S5.1.2	S11.7 Replaceable bulb headlamp physical tests
S5.1.2	S12.3 Combination headlamp physical tests
S5.1.2	S7.13.2 School bus signal lamp physical tests
S5.1.2	Table XXII Plastic optical material tests
S5.1.2(a)	Table XXII Plastic optical material tests
S5.1.2(b)	Table XXII Plastic optical material tests
S5.1.2(c)	Table XXII Plastic optical material tests
S5.1.2(d)	Table XXII Plastic optical material tests
S5.1.2(e)	Table XXII Plastic optical material tests
S5.1.2(f)	Table XXII Plastic optical material tests
S5.1.2(g)	Table XXII Plastic optical material tests
S5.1.3	S6.2.1 Impairment due to additional lamps or reflective devices
S5.1.4	Table I Additional Lamps Required on All School Buses except Multifunction School Activity Buses
S5.1.4(a)	Table I Number and color-School bus signal lamps
S5.1.4(b)	S7.13.1 School bus signal lamp photometry requirements
S5.1.4(b)	Table XVII Amber lamp photometry

APPENDIX A: FMVSS 108 REWRITE CROSS REFERENCE

CURRENT FMVSS 108 OR INCORPORATED DOCUMENT CITATION	FMVSS 108 REWRITE CITATION
S5.1.4(b)(i)	Table I Number and color-School bus signal lamps
S5.1.4(b)(ii)	Table I Activation-School bus signal lamps
S5.1.5	S6.1.2 Color
S5.1.5	S7.1.3 Turn signal lamp physical tests
S5.1.5	S7.2.2 Taillamp physical tests
S5.1.5	S7.3.2 Stop lamp physical tests
S5.1.5	S7.4.2 Side marker lamp physical tests
S5.1.5	S7.5.2 Clearance and identification lamp physical tests
S5.1.5	S7.6.3 Backup lamp physical tests
S5.1.5	S7.7.3 License plate lamp physical tests
S5.1.5	S7.8.2 Parking lamp physical tests
S5.1.5	S7.9.3 High mounted stop lamp physical tests
S5.1.5	S7.10.2 Reflex reflector physical tests
S5.1.5	S7.11.3 Daytime running lamp (DRL) physical tests
S5.1.5	S7.13.2 School bus signal lamp physical tests
S5.1.5	S9.4 Sealed beam headlamp physical tests
S5.1.5	S10.7 Integral beam headlamp physical tests
S5.1.5	S11.7 Replaceable bulb headlamp physical tests
S5.1.5	S12.3 Combination headlamp physical tests
S5.1.5	Table XXII Color test
S5.2.1	S5.1 SAE Publications
S5.2.2	S17.3 Sealed beam headlamp markings
S5.3	S6.1.3 Mounting location and height
S5.3.1.2	Table I Mounting location-Reflex reflectors
S5.3.1.3	Table I Mounting location-Reflex reflectors
S5.3.1.3	Table I Mounting location-Sidemarker lamps
S5.3.1.4	Table I Mounting Height-Clearance lamps
S5.3.1.6	Table I Mounting location-Clearance lamps
S5.3.1.7	S7.1.1.2.3 Spacing based photometric multipliers
S5.3.1.7	Table VI Front turn signal lamp-2.5 x base individual point photometry
S5.3.1.7	Table VI Front turn signal lamp-2.5 x base zone photometry
S5.3.1.8(a)(1)	Table I Mounting location-High mounted stop lamp
S5.3.1.8(a)(2)	S6.1.3.2.1 High mounted stop lamp mounting
S5.3.1.8(a)(3)	S6.1.3.2.2 High mounted stop lamp reflections
S5.3.1.8(a)(3)	S7.9.2 Interior mounting
S5.3.1.8(b)	S6.1.1.2 High mounted stop lamp
S5.3.2(a)	S6.2.1 Impairment due to additional lamps or reflective devices
S5.3.2(b)	S6.4.3 Visibility options
S5.3.2(b)(1)	S6.4.3(a) Lens area option
S5.3.2(b)(1)	Table V Lens area visibility
S5.3.2(b)(2)	S6.4.3(b) Luminous intensity option
S5.3.2(b)(2)	Table V Luminous intensity visibility
S5.3.2(c)	S6.4.2 Visibility
S5.3.2(c)	Table V High mounted stop lamp visibility
S5.3.2(d)	S6.4.2 Visibility
S5.3.2(d)	Table V High mounted stop lamp visibility
S5.3.2(e)	S6.4.2 Visibility
S5.3.2(e)	Table V Backup lamp visibility
S5.3.2.1	Table I Mounting location-Clearance lamps
S5.3.2.1	Table XI Footnote 4
S5.3.2.2	S6.2.2 Lamp or reflective device obstructed
S5.3.2.3	S6.4.5 Low mounted lamps
S5.3.2.3	Table V Footnote 2
S5.3.2.3	Table VI Footnote 3
S5.3.2.3	Table VII Footnote 3
S5.3.2.3	Table VIII Footnote 3
S5.3.2.3	Table IX Footnote 4
S5.3.2.3	Table X Footnote 3

APPENDIX A:
FMVSS 108 REWRITE
CROSS REFERENCE

CURRENT FMVSS 108 OR INCORPORATED DOCUMENT CITATION	FMVSS 108 REWRITE CITATION
S5.3.2.3	Table XI Footnote 1
S5.3.2.3	Table XIV Footnote 3
S5.3.2.3	Table XVI Footnote 1
S5.3.2.3	Table XVII Footnote 1
S5.3.2.4	S6.4.4 Alternative to S6.4.3
S5.4	S6.3 Equipment combinations
S5.4(a)	S6.3.1 High mounted stop lamp and cargo lamp
S5.4(b)	S4 Definitions-Optically combined
S5.4(b)	S6.3.2 Optically combined HMSL and cargo lamp prohibition
S5.4(c)	S4 Definitions-Optically combined
S5.4(c)	S6.3.3. Clearance lamp and taillamp
S5.5.1	S7.14.4 Headlamp beam switching device
S5.5.1	S7.14.4.1 Semi-automatic headlamp beam switching device
S5.5.2	S7.14.5 Upper beam headlamp indicator
S5.5.2	S7.14.5.1 Indicator size and location
S5.5.3	S6.1.5 Activation
S5.5.3	Table I Activation Taillamps
S5.5.4	S6.1.5.1 Stop lamp activation
S5.5.4	Table I Activation-High mounted stop lamps
S5.5.4	Table I Activation-Stop lamps
S5.5.5	S6.1.1.4 Hazard warning lamps
S5.5.5	S7.14.6.1 Operating unit switch
S5.5.6	S7.14.3 Turn signal pilot indicator
S5.5.6	S7.14.3.2 Turn signal lamp failure
S5.5.7	S6.2.3 Auxiliary lamp or reflective device requirements
S5.5.7	S6.1.5 Activation
S5.5.7(a)	Table I Activation Taillamps
S5.5.7(a)	Table I Activation-License plate lamps
S5.5.7(a)	Table I Activation-Parking lamps
S5.5.7(a)	Table I Activation-Sidemarker lamps
S5.5.7(b)	Table I Activation Taillamps
S5.5.7(b)	Table I Activation-License plate lamps
S5.5.7(b)	Table I Activation-Parking lamps
S5.5.7(b)	Table I Activation-Sidemarker lamps
S5.5.8	S8.2 Simultaneous beam activation
S5.5.8	Table I Activation-Headlamp
S5.5.8	Table II Footnote 1
S5.5.8	Table II Footnote 3
S5.5.8	Table II Footnote 4
S5.5.8	Table II Footnote 5
S5.5.9	Table I Activation-Headlamp
S5.5.9	Table I Activation-Motorcycle headlamps
S5.5.10	S6.2.3 Auxiliary lamp or reflective device requirements
S5.5.10(a)	S6.1.5 Activation
S5.5.10(a)	Table I Activation-School bus signal lamps
S5.5.10(a)	Table I Activation-Turn signals
S5.5.10(b)	S6.1.5 Activation
S5.5.10(b)	Table I Activation-Headlamp
S5.5.10(b)	Table I Activation-Sidemarker lamps
S5.5.10(b)	Table I Activation-Motorcycle headlamps
S5.5.10(c)	Table I Activation-Motorcycle headlamps
S5.5.10(d)	S6.1.5 Activation
S5.5.10(d)	Table I Activation Taillamps
S5.5.10(d)	Table I Activation-Backup lamps
S5.5.10(d)	Table I Activation-Clearance lamps
S5.5.10(d)	Table I Activation-DRL
S5.5.10(d)	Table I Activation-High mounted stop lamps
S5.5.10(d)	Table I Activation-Identification lamps

APPENDIX A: FMVSS 108 REWRITE CROSS REFERENCE

CURRENT FMVSS 108 OR INCORPORATED DOCUMENT CITATION	FMVSS 108 REWRITE CITATION
S5.5.10(d)	Table I Activation-License plate lamps
S5.5.10(d)	Table I Activation-Parking lamps
S5.5.10(d)	Table I Activation-Sidemarker lamps
S5.5.10(d)	Table I Activation-Stop lamps
S5.5.11(a)	S6.2.4 Daytime running lamps (DRL)
S5.5.11(a)	Table I Activation-DRL
S5.5.11(a)	Table I Lighting device
S5.5.11(a)(1)	S7.11.1 Daytime running lamp (DRL) photometry
S5.5.11(a)(1)(i)	S7.11.1(a) Photometry exception
S5.5.11(a)(1)(ii)	S7.11.1(b) Photometry exception
S5.5.11(a)(2)	S6.5.2 DRL marking
S5.5.11(a)(3)	S7.11.3 Daytime running lamp (DRL) physical tests
S5.5.11(a)(3)	Table I Lighting device
S5.5.11(a)(3)	Table I Number and color
S5.5.11(a)(4)	S7.11.1 Daytime running lamp (DRL) photometry
S5.5.11(a)(4)	S7.11.2 Spacing to turn signal lamps
S5.5.11(a)(4)	S7.11.2.2 Not optically combined with turn signal lamp
S5.5.11(a)(5)	S7.11.2.1 Optically combined with turn signal lamp
S5.5.11(a)(5)	Table I Activation-DRL
S5.5.11(b)	Table I Lighting device
S5.5.11(b)	Table I Mounting height
S5.7	S6.1.1.1 Conspicuity systems
S5.7	S7.12 Conspicuity systems
S5.7.1	S6.1.1.1 Conspicuity systems
S5.7.1.1	S7.12.1 Retroreflective sheeting
S5.7.1.2	S6.8.5 Photometric testing
S5.7.1.2	S6.8.5.4.1 Reflex reflector and retroreflective sheeting photometry measurements
S5.7.1.2	S7.12.1 Retroreflective sheeting
S5.7.1.2	S7.12.1.2 Retroreflective sheeting photometry
S5.7.1.2	Table XVI Red C2 sheeting photometry
S5.7.1.2	Table XVI Red C3 sheeting photometry
S5.7.1.2	Table XVI Red C4 sheeting photometry
S5.7.1.2	Table XVI White C2 sheeting photometry
S5.7.1.2	Table XVI White C3 sheeting photometry
S5.7.1.2	Table XVI White C4 sheeting photometry
S5.7.1.3(a)	Table III Application pattern-Alternating
S5.7.1.3(b)	Table III Application pattern-Alternating
S5.7.1.3(c)	Table III Application pattern-Alternating
S5.7.1.3(d)	S7.12.1 Retroreflective sheeting
S5.7.1.3(e)	Table XVI Red sheeting photometry
S5.7.1.3(e)	Table XVI White sheeting photometry
S5.7.1.4(a)	Table III Application location
S5.7.1.4(b)	Table III Application spacing
S5.7.1.4(c)	Table III Application spacing
S5.7.1.4.1	Table III Trailer rear-Element 2
S5.7.1.4.1	Table III Trailer rear-Element 3
S5.7.1.4.1(a)	Table III Trailer rear-Element 1
S5.7.1.4.1(b)	Table III Trailer rear-Element 2
S5.7.1.4.1(c)	Table III Trailer rear-Element 3
S5.7.1.4.2(a)	Table III Trailer side-Alternating
S5.7.1.4.2(b)	Table III Trailer side-Alternating
S5.7.1.4.3(a)	Table III Truck tractor-Element 1
S5.7.1.4.3(b)	Table III Truck tractor-Element 2
S5.7.1.5	S6.5.1.1 DOT marking-conspicuity sheeting
S5.7.1.5	S7.12.1.1 Certification marking
S5.7.2	S6.8.5.4.1 Reflex reflector and retroreflective sheeting photometry measurements
S5.7.2	S7.12.2 Conspicuity reflex reflectors
S5.7.2.1	S7.12.2.2 Conspicuity reflex reflector photometry

APPENDIX A: FMVSS 108 REWRITE CROSS REFERENCE

CURRENT FMVSS 108 OR INCORPORATED DOCUMENT CITATION	FMVSS 108 REWRITE CITATION
S5.7.2.1(a)	S6.8.5 Photometric testing
S5.7.2.1(b)	Table XVI Red conspicuity reflex reflector photometry
S5.7.2.1(c)	Table XVI White horizontal conspicuity reflex reflector photometry
S5.7.2.1(d)	Table XVI White vertical conspicuity reflex reflector photometry
S5.7.2.2(a)	Table III Application pattern-Alternating
S5.7.2.2(b)	Table III Application pattern-White
S5.7.2.3	S7.12.2.1 Certification marking
S5.7.3	S7.12.1 Retroreflective sheeting
S5.8.1	S6.7 Replacement equipment
S5.8.1	S18 Replaceable headlamp lens
S5.8.1	Table XXIII Humidity test
S5.8.2	S17.3 Sealed beam headlamp markings
S5.8.3	S6.7 Replacement equipment
S5.8.4	S6.7 Replacement equipment
S5.8.5	S6.7 Replacement equipment
S5.8.6	S6.7 Replacement equipment
S5.8.7	S6.7 Replacement equipment
S5.8.8	S6.7 Replacement equipment
S5.8.9	S6.7 Replacement equipment
S5.8.10	S6.5.1.2 DOT marking-except headlamps
S5.8.11	S18 Replaceable headlamp lens
S6.1	S5.1 SAE Recommended=mandatory
S6.2	S7.1.3 Turn signal lamp physical tests
S6.2	S7.2.2 Taillamp physical tests
S6.2	S7.3.2 Stop lamp physical tests
S6.2	S7.4.2 Side marker lamp physical tests
S6.2	S7.5.2 Clearance and identification lamp physical tests
S6.2	S7.6.3 Backup lamp physical tests
S6.2	S7.7.3 License plate lamp physical tests
S6.2	S7.8.2 Parking lamp physical tests
S6.2	S7.9.3 High mounted stop lamp physical tests
S6.2	S7.10.2 Reflex reflector physical tests
S6.2	S7.13.2 School bus signal lamp physical tests
S6.3	S4 Definitions-Effective projected luminous lens area
S7.1	Table I
S7.1	S8.1 Headlighting systems
S7.2(a)	S6.5.1 DOT marking
S7.2(b)	S17.1 Trademark
S7.2(c)	S17.2 Voltage and trade number
S7.2(d)	S6.8.5.6.2 Aiming
S7.2(d)	S6.8.5.6.5 Location of test points
S7.2(e)	S6.5.1 DOT marking
S7.2(e)	S18 Replaceable headlamp lens
S7.3	S8.1.1 Headlighting system type
S7.3	S8.1.2 Headlamp category
S7.3	S9 Sealed beam headlamps
S7.3.1	S17.3 Sealed beam headlamp markings
S7.3.2	S9.1 Sealed beam headlamp installation
S7.3.2	Table II Sealed beam headlamps Type A
S7.3.2(a)(3)	S6.8.5 Photometric testing
S7.3.2(a)(3)	S9.3 Sealed beam headlamp photometry
S7.3.2(a)(3)	Table II Sealed beam headlamps Type A
S7.3.2(b)	Table XXIII Retaining ring test
S7.3.2(b)	Table XXIII Headlamp connector test
S7.3.2(c)	S9.4 Sealed beam headlamp physical tests
S7.3.2(c)	Table XXIII Vibration test

APPENDIX A: FMVSS 108 REWRITE CROSS REFERENCE

CURRENT FMVSS 108 OR INCORPORATED DOCUMENT CITATION	FMVSS 108 REWRITE CITATION
S7.3.2(d)	S9.4 Sealed beam headlamp physical tests
S7.3.2(d)	Table XXIII Headlamp wattage test
S7.3.2(d)	Table II Sealed beam headlamps Type A
S7.3.3	S9.1 Sealed beam headlamp installation
S7.3.3	Table II Sealed beam headlamps Type B
S7.3.3(a)	S6.8.5 Photometric testing
S7.3.3(a)	S9.3 Sealed beam headlamp photometry
S7.3.3(a)	Table II Sealed beam headlamps Type B
S7.3.3(b)	S9.4 Sealed beam headlamp physical tests
S7.3.3(b)	Table II Sealed beam headlamps Type B
S7.3.3(b)	Table XXIII Headlamp wattage test
S7.3.4	S6.8.5 Photometric testing
S7.3.4	S9.1 Sealed beam headlamp installation
S7.3.4	S9.3 Sealed beam headlamp photometry
S7.3.4	S9.4 Sealed beam headlamp physical tests
S7.3.4	Table II Sealed beam headlamps Type C
S7.3.5	S9.1 Sealed beam headlamp installation
S7.3.5	Table II Sealed beam headlamps Type D
S7.3.5(a)	S6.8.5 Photometric testing
S7.3.5(a)	S9.3 Sealed beam headlamp photometry
S7.3.5(b)	S9.4 Sealed beam headlamp physical test
S7.3.5(b)	Table XXIII Headlamp wattage test
S7.3.6	S9.1 Sealed beam headlamp installation
S7.3.6	Table II Sealed beam headlamps Type E
S7.3.6(a)	S9.3 Sealed beam headlamp photometry
S7.3.6(a),	S6.8.5 Photometric test requirements
S7.3.6(b)	S9.4 Sealed beam headlamp physical tests
S7.3.6(b)	Table XXIII Headlamp wattage test
S7.3.7	S9.1 Sealed beam headlamp installation
S7.3.7	Table II Sealed beam headlamps Type F
S7.3.7(a)	Relocate to Part 564, Appendix C
S7.3.7(b)	S6.8.5 Photometric testing
S7.3.7(b)	S6.8.5.6.2 Aiming
S7.3.7(b)	S9.3 Sealed beam headlamp photometry
S7.3.7(c)	S9.4 Sealed beam headlamp physical tests
S7.3.7(d)	S6.8.5 Photometric testing
S7.3.7(d)	S9.3 Sealed beam headlamp photometry
S7.3.7(e)(1)	S4 Definitions-Mounting ring (type F sealed beam)
S7.3.7(e)(2)	S4 Definitions-Retaining ring (type F sealed beam)
S7.3.7(e)(5)	Table XXIII Aiming adjustment test-Laboratory
S7.3.7(e)(6)	Table XXIII Aiming adjustment test-Laboratory
S7.3.7(e)(7)	Table XXIII Retaining ring test
S7.3.7(e)(8)	Table XXIII Torque deflection test
S7.3.7(f)	S17.3 Sealed beam headlamp markings
S7.3.7(g)	S9.4 Sealed beam headlamp physical tests
S7.3.7(g)	Table II Sealed beam headlamps Type F
S7.3.7(g)	Table XXIII Headlamp wattage test
S7.3.7(h)	S9.2 Type F sealed beam headlamp simultaneous aim
S7.3.7(h)(1)	S6.8.5 Photometric testing
S7.3.7(h)(1)	S9.2 Type F sealed beam headlamp simultaneous aim
S7.3.7(h)(2)	S9.2 Type F sealed beam headlamp simultaneous aim
S7.3.7(i)	S9.4 Sealed beam headlamp physical tests
S7.3.7(i)	Table XXIII Vibration test
S7.3.8	S9.1 Sealed beam headlamp installation
S7.3.8	Table II Sealed beam headlamps Type G
S7.3.8(b)	S6.8.5 Photometric testing
S7.3.8(b)	S9.3 Sealed beam headlamp photometry requirements
S7.3.8(c)(2)	Table XXIII Torque deflection test

APPENDIX A:
FMVSS 108 REWRITE
CROSS REFERENCE

CURRENT FMVSS 108 OR INCORPORATED DOCUMENT CITATION	FMVSS 108 REWRITE CITATION
S7.3.8(d)	S9.4 Sealed beam headlamp physical tests
S7.3.8(d)	Table XXIII Vibration test
S7.3.8(e)	S9.4 Sealed beam headlamp physical tests
S7.3.8(e)	Table II Sealed beam headlamps Type G
S7.3.8(e)	Table XXIII Headlamp wattage test
S7.3.8(f)	S17.3 Sealed beam headlamp markings
S7.3.9	S9.1 Sealed beam headlamp installation
S7.3.9	Table II Sealed beam headlamps Type H
S7.3.9(a)	S6.8.5 Photometric testing
S7.3.9(a)	S9.3 Sealed beam headlamp photometry requirements
S7.3.9(a)	Table II Sealed beam headlamps Type H
S7.3.9(b)	S9.4 Sealed beam headlamp physical test requirements
S7.3.9(b)	Table II Sealed beam headlamps Type H
S7.3.9(b)	Table XXIII Headlamp wattage test
S7.3.9(c)	S17.3 Sealed beam headlamp markings
S7.4	S8.1.1 Headlighting system type
S7.4	S8.1.2 Headlamp category
S7.4	S10.1 Integral beam headlamp installation
S7.4(a)	S10.1 Integral beam headlamp installation
S7.4(a)	S10.6 Integral beam headlamp photometry
S7.4(a)(1)(i)	S6.8.5 Photometric testing
S7.4(a)(1)(i)	Table II Integral beam headlamps-4 lamp system
S7.4(a)(1)(ii)	S6.8.5 Photometric testing
S7.4(a)(1)(ii)	S8.2 Simultaneous beam activation
S7.4(a)(1)(ii)	Table II Integral beam headlamps-4 lamp system-simultaneous activation
S7.4(a)(1)(iii)	S6.8.5 Photometric testing
S7.4(a)(1)(iii)	Table II Integral beam headlamps-4 lamp system-upper and lower
S7.4(a)(2)	Table II Integral beam headlamps-2 lamp system
S7.4(a)(2)(i)	S6.8.5 Photometric testing
S7.4(a)(2)(i)	Table II Integral beam headlamps-2 lamp system
S7.4(a)(2)(ii)	S6.8.5 Photometric testing
S7.4(a)(2)(ii)	Table II Integral beam headlamps-2 lamp system
S7.4(a)(3)	S6.8.5 Photometric testing
S7.4(a)(3)	S6.8.5.6.6 Beam contributor photometry
S7.4(a)(3)	Table II Integral beam headlamps-beam contributor system
S7.4(a)(3)	Table II Footnote 6
S7.4(b)	S8.1.3 Vertical headlamp arrangement
S7.4(b)	S8.1.4 Horizontal headlamp arrangement
S7.4(c)(1)	S10.4 Markings
S7.4(c)(2)	S10.4 Markings
S7.4(d)	S10.3 Integral beam headlamp simultaneous aim
S7.4(d)	Table II Footnote 2
S7.4(e)	S6.8.5.6 Headlamp photometry measurements
S7.4(f)	S10.2 Integral beam headlamp aimability
S7.4(f)	Table XXIII Aiming adjustment test-Laboratory
S7.4(g)	S10.7 Integral beam headlamp physical tests
S7.4(g)	S12.3 Combination headlamp physical tests
S7.4(g)	S10.5 Additional light sources
S7.4(h)	S10.7 Integral beam headlamp physical tests
S7.4(h)(1)	Table XXIII Abrasion test
S7.4(h)(2)	Table XXIII Chemical resistance test
S7.4(h)(3)	Table XXIII Corrosion-connector test
S7.4(h)(4)	Table XXIII Dust test
S7.4(h)(5)(i)	Table XXIII Temperature cycle test
S7.4(h)(5)(ii)	Table XXIII Internal heat test
S7.4(h)(6)	Table XXIII Humidity test
S7.4(h)(7)	Table XXIII Vibration test
S7.4(i)	S10.5 Additional light sources

APPENDIX A: FMVSS 108 REWRITE CROSS REFERENCE

CURRENT FMVSS 108 OR INCORPORATED DOCUMENT CITATION	FMVSS 108 REWRITE CITATION
S7.5	S8.1.1 Headlighting system type
S7.5	S8.1.2 Headlamp category
S7.5(a)	S11.1 Replaceable bulb headlamp installation
S7.5(b)	S6.8.5 Photometric testing
S7.5(b)	Table II Replaceable bulb headlamps
S7.5(c)	S6.8.5.6 Headlamp photometry measurements
S7.5(d)	S8.1.3 Vertical headlamp arrangement
S7.5(d)	S8.1.4 Horizontal headlamp arrangement
S7.5(d)	Table II Replaceable bulb headlamps-2 lamp system with only dual filament bulbs
S7.5(d)	Table II Replaceable bulb headlamps-4 lamp system with only dual filament bulbs
S7.5(d)(1)	S11.2 Replaceable bulb headlamp aiming restrictions
S7.5(d)(2)	S6.8.5 Photometric testing
S7.5(d)(2)	Table II Replaceable bulb headlamps-2 lamp system with only dual filament bulbs
S7.5(d)(2)(i)	Table II Replaceable bulb headlamps-2 lamp system with only dual filament bulbs-lower beam
S7.5(d)(2)(i)(A)	Table II Replaceable bulb headlamps-2 lamp system with only dual filament bulbs-lower beam-outboard/upper bulb
S7.5(d)(2)(i)(A)(1)	Table II Replaceable bulb headlamps-2 lamp system with only dual filament bulbs except HB2-lower beam-outboard/upper bulb
S7.5(d)(2)(i)(A)(2)	Table II Replaceable bulb headlamps-2 lamp system with only dual filament bulbs including HB2-lower beam-outboard/upper bulb
S7.5(d)(2)(i)(B)	Table II Replaceable bulb headlamps-2 lamp system with only dual filament bulbs-lower beam-both bulbs
S7.5(d)(2)(ii)	Table II Replaceable bulb headlamps-2 lamp system with only dual filament bulbs-upper beam
S7.5(d)(2)(ii)(A)	Table II Replaceable bulb headlamps-2 lamp system with only dual filament bulbs-upper beam-inboard/lower bulb
S7.5(d)(2)(ii)(A)(1)	Table II Replaceable bulb headlamps-2 lamp system with only dual filament bulbs except HB2-upper beam-inboard/lower bulb
S7.5(d)(2)(ii)(A)(2)	Table II Replaceable bulb headlamps-2 lamp system with only dual filament bulbs including HB2-upper beam-inboard/lower bulb
S7.5(d)(2)(ii)(B)	Table II Replaceable bulb headlamps-2 lamp system with only dual filament bulbs-upper beam-both bulbs
S7.5(d)(3)	Table II Replaceable bulb headlamps-4 lamp system with only dual filament bulbs
S7.5(d)(3)(i)	Table II Replaceable bulb headlamps-4 lamp system with only dual filament bulbs-lower beam-outboard/upper lamp
S7.5(d)(3)(i)(A)	Table II Replaceable bulb headlamps-4 lamp system with only dual filament bulbs except HB2-lower beam-outboard/upper lamp
S7.5(d)(3)(i)(B)	S11.5 Markings
S7.5(d)(3)(i)(B)	Table II Replaceable bulb headlamps-4 lamp system with only dual filament bulbs including HB2 except HB1 or HB5-lower beam-outboard/upper lamp
S7.5(d)(3)(ii)	Table II Replaceable bulb headlamps-4 lamp system with only dual filament bulbs-upper beam-inboard/lower lamp
S7.5(d)(3)(ii)(A)	Table II Replaceable bulb headlamps-4 lamp system with only dual filament bulbs except HB2-upper beam-inboard/lower lamp
S7.5(d)(3)(ii)(B)	S11.5 Markings
S7.5(d)(3)(ii)(B)	Table II Replaceable bulb headlamps-4 lamp system with only dual filament bulbs including HB2 except HB1 or HB5-upper beam-inboard/lower lamp
S7.5(e)	Table II Replaceable bulb headlamps-2 lamp system except with only dual filament bulbs
S7.5(e)	Table II Replaceable bulb headlamps-4 lamp system except with only dual filament bulbs
S7.5(e)(1)	S11.2 Replaceable bulb headlamp aiming restrictions
S7.5(e)(2)	S6.8.5 Photometric testing
S7.5(e)(2)	Table II Replaceable bulb headlamps-2 lamp system except with only dual filament bulbs
S7.5(e)(2)(i)	Table II Replaceable bulb headlamps-2 lamp system except with only dual filament bulbs-lower beam

APPENDIX A: FMVSS 108 REWRITE CROSS REFERENCE

CURRENT FMVSS 108 OR INCORPORATED DOCUMENT CITATION	FMVSS 108 REWRITE CITATION
S7.5(e)(2)(i)(A)	Table II Replaceable bulb headlamps-2 lamp system except with only dual filament bulbs-lower beam-outboard/upper bulb
S7.5(e)(2)(i)(B)	Table II Replaceable bulb headlamps-2 lamp system except with only dual filament bulbs-lower beam-both bulbs
S7.5(e)(2)(ii)	Table II Replaceable bulb headlamps-2 lamp system except with only dual filament bulbs-upper beam
S7.5(e)(2)(ii)(A)	Table II Replaceable bulb headlamps-2 lamp system except with only dual filament bulbs-upper beam-inboard/lower bulb
S7.5(e)(2)(ii)(B)	Table II Replaceable bulb headlamps-2 lamp system except with only dual filament bulbs-upper beam-both bulbs
S7.5(e)(3)	Table II Replaceable bulb headlamps-4 lamp system except with only dual filament bulbs
S7.5(e)(3)(i)	S11.5 Markings
S7.5(e)(3)(i)	Table II Replaceable bulb headlamps-4 lamp system except with only dual filament bulbs-lower beam-outboard/upper lamp
S7.5(e)(3)(ii)	S11.5 Markings
S7.5(e)(3)(ii)	Table II Replaceable bulb headlamps-4 lamp system except with only dual filament bulbs-upper beam-inboard/lower lamp
S7.5(f)	S11.4 Replacement equipment
S7.5(g)	S17.4 Replaceable bulb headlamp markings
S7.5(h)	S11.2 Replaceable bulb headlamp aiming restrictions
S7.5(h)	Table XXIII Aiming adjustment test-Laboratory
S7.5(i)	S11.7 Replaceable bulb headlamp physical tests
S7.5(i)	Table XXIII Corrosion test
S7.5(j)	S11.3 Additional light sources
S7.6	S8.1.1 Headlighting system type
S7.6	S8.1.2 Headlamp category
S7.6	S12 Combination headlamps
S7.6.1	S12.1 Combination headlamp installation
S7.6.2	S6.8.5 Photometric testing
S7.6.2	S12.2 Combination headlamp photometry
S7.6.2	Table II Combination headlamps-2 lamp system
S7.6.2.1	S12.2 Combination headlamp photometry
S7.6.2.1	Table XXIII Headlamp physical test requirements
S7.6.2.2	S12.2 Combination headlamp photometry
S7.6.2.2	Table XXIII Headlamp physical test requirements
S7.6.3	S6.8.5 Photometric testing
S7.6.3	S12.2 Combination headlamp photometry
S7.6.3	Table II Combination headlamps-4 lamp system
S7.7	S15 Replaceable light sources
S7.7(a)	S15.1 Markings
S7.7(b)	S15.2 Power and flux measurement
S7.7(c)	S15.6 Replaceable light source physical test requirements
S7.7(c)	Table XXIII Pressure test for replaceable light sources
S7.7(d)	S15.3 Power and flux measurement
S7.7(d)(1)	S15.3.1 Testing-resistive filament light sources
S7.7(d)(2)	S15.3.2 Testing-discharge light sources
S7.7(e)	S15.4 Ballast markings
S7.7(f)	S15.5 Gas discharge laboratory life
S7.7(g)	S15.6 Replaceable light source physical test requirements
S7.7(g)	Table XXIII Deflection test for replaceable light sources
S7.8.1(a)	S14.6.2 Optical axis marking-headlamp
S7.8.1(b)	S14.6.1 Optical axis marking-vehicle
S7.8.1(c)	S14.6.3 Optical axis marking-visual aim headlamp
S7.8.2	S14.1 Headlamp mounting and aiming
S7.8.2.1(a)	S14.4 Aim adjustment interaction
S7.8.2.1(a)	Table XXIII Aiming adjustment test-On vehicle
S7.8.2.1(b)	S14.4 Aim adjustment interaction

APPENDIX A: FMVSS 108 REWRITE CROSS REFERENCE

CURRENT FMVSS 108 OR INCORPORATED DOCUMENT CITATION	FMVSS 108 REWRITE CITATION
S7.8.2.1(b)	Table XXIII Aiming adjustment test-On vehicle
S7.8.2.1(c)	S14.5 Horizontal adjustment-visually aimed headlamp
S7.8.2.1(c)	Table XXIII Aiming adjustment test-Laboratory
S7.8.2.2	S6.8.5.6.2(h) Aiming-Moveable reflector
S7.8.2.2(a)	S14.7 Moveable reflectors
S7.8.2.2(a)	Table XXIII Aiming adjustment test-Laboratory
S7.8.2.2(b)	S14.7 Moveable reflectors
S7.8.2.2(b)	Table XXIII Aiming adjustment test-Laboratory
S7.8.2.2(c)	Table XXIII Aiming adjustment test-Laboratory
S7.8.2.2(d)	Table XXIII Aiming adjustment test-Laboratory
S7.8.3	S6.8.5.6.2(h) Aiming-Moveable reflector
S7.8.3	Table XXIII Aiming adjustment test-Laboratory
S7.8.3	Table XXIII Aiming adjustment test-On vehicle
S7.8.4	S6.8.5.6.2(h) Aiming-Moveable reflector
S7.8.4	Table XXIII Aiming adjustment test-Laboratory
S7.8.5	S14.2 Headlamp obstructions
S7.8.5	S14.3 Headlamp aiming systems
S7.8.5.1	S14.8 External aiming
S7.8.5.1(a)	Table XXIII Torque deflection test
S7.8.5.1(b)	Table XXIII Inward force test
S7.8.5.1(c)	Table XXIII Corrosion test
S7.8.5.1(d)	S14.8.1 Headlamp aiming device locating plates
S7.8.5.1(d)(1)	S14.8.1.1 Aiming pads
S7.8.5.1(d)(2)	S14.8.1.2 Aiming dimension marking
S7.8.5.1(e)	S14.8.2 Nonadjustable headlamp aiming device locating plates
S7.8.5.2	S14.9 On-vehicle aiming
S7.8.5.2(a)	S14.9.1 Aim
S7.8.5.2(a)(1)	S14.9.1.1 Vertical aim
S7.8.5.2(a)(1)(i)	S14.9.1.1.1 Graduations
S7.8.5.2(a)(1)(ii)	S14.9.1.1.2 VHAD markings
S7.8.5.2(a)(1)(iii)	S14.9.1.1.3 Graduation scale
S7.8.5.2(a)(1)(iv)	S14.9.1.1.4 Vertical indicator range
S7.8.5.2(a)(1)(v)	S14.9.1.1.5 Floor slope compensation
S7.8.5.2(a)(1)(vi)	S14.9.1.1.6 Graduation legibility
S7.8.5.2(a)(2)	S14.9.1.2 Horizontal aim
S7.8.5.2(a)(2)(i)	S14.9.1.2.1 Graduation scale
S7.8.5.2(a)(2)(ii)	S14.9.1.2.2 Horizontal markings
S7.8.5.2(a)(2)(iii)	S14.9.1.2.3 Graduation legibility
S7.8.5.2(a)(2)(iv)	S14.9.1.2.4 Horizontal indicator range
S7.8.5.2(b)(1)	S14.9.2.1 Aiming instruction location and content
S7.8.5.2(b)(2)	S14.9.2.2 Remote indicator instructions
S7.8.5.2(b)(3)	S14.4.1 Excess aim interaction
S7.8.5.2(c)	S14.9.3 VHAD permanent calibration
S7.8.5.2(d)	S14.9.5 VHAD physical test requirements
S7.8.5.2(d)(1)	S6.8.5.6 Headlamp photometry measurements
S7.8.5.2(d)(1)	S6.8.5.6.2 Aiming
S7.8.5.2(d)(1)	S6.8.5.6.2(b) Aiming-VHAD
S7.8.5.2(d)(2)	S14.9.4 Replacement units
S7.8.5.2(d)(3)(i)	Table XXIII VHAD scale graduation test
S7.8.5.2(d)(3)(i)	Table XXIII VHAD cold scale graduation test
S7.8.5.2(d)(3)(i)	Table XXIII VHAD hot scale graduation test
S7.8.5.2(d)(3)(i)	Table XXIII VHAD thermal cycle test
S7.8.5.2(d)(3)(i)	Table XXIII VHAD corrosion test
S7.8.5.2(d)(3)(i)	Table XXIII VHAD photometry test
S7.8.5.2(d)(3)(ii)(A)	Table XXIII VHAD cold scale graduation test
S7.8.5.2(d)(3)(ii)(B)	Table XXIII VHAD hot scale graduation test
S7.8.5.2(d)(3)(ii)(C)	Table XXIII VHAD thermal cycle test
S7.8.5.2(d)(3)(ii)(D)	Table XXIII VHAD corrosion test

APPENDIX A:
FMVSS 108 REWRITE
CROSS REFERENCE

CURRENT FMVSS 108 OR INCORPORATED DOCUMENT CITATION	FMVSS 108 REWRITE CITATION
S7.8.5.2(d)(3)(ii)(E)	Table XXIII VHAD photometry test
S7.8.5.3	S14.10 Visual/optical aiming
S7.8.5.3(a)	S14.10.1 Vertical aim, lower beam
S7.8.5.3(a)(1)	S6.8.5.6.2(c) Aiming-LB VOL/VOR vertical
S7.8.5.3(a)(1)	S14.10.1.1 Vertical position of the cutoff
S7.8.5.3(a)(2)	S14.10.1.2 Vertical gradient
S7.8.5.3(a)(3)	S14.10.1.3 Horizontal position of the cutoff
S7.8.5.3(a)(4)	S14.10.1.4 Maximum inclination of the cutoff
S7.8.5.3(a)(5)(i)	S14.10.1.5 Measuring the cutoff parameter
S7.8.5.3(a)(5)(i)	S14.10.1.5.1 Test position
S7.8.5.3(a)(5)(ii)	S14.10.1.5.2 Headlamp aiming
S7.8.5.3(a)(5)(iii)	S14.10.1.5.3 Beam scanning
S7.8.5.3(a)(5)(iv)	S14.10.1.5.4 Gradient calculation
S7.8.5.3(b)	S6.8.5.6.2(d) Aiming-LB VOL/VOR horizontal
S7.8.5.3(b)	S14.10.2 Horizontal aim, lower beam
S7.8.5.3(c)(1)	S6.8.5.6.2(e) Aiming-UB VOL/VOR vertical
S7.8.5.3(c)(1)	S14.10.3.1 Combined upper and lower beams
S7.8.5.3(c)(2)	S6.8.5.6.2(e) Aiming-UB VOL/VOR vertical
S7.8.5.3(c)(2)	S14.10.3.2 Upper beam without lower beam
S7.8.5.3(d)(1)	S6.8.5.6.2(f) Aiming-UB VOL/VOR horizontal
S7.8.5.3(d)(1)	S14.10.4.1 Combined upper and lower beams
S7.8.5.3(d)(2)	S6.8.5.6.2(f) Aiming-UB VOL/VOR horizontal
S7.8.5.3(d)(2)	S14.10.4.2 Upper beam without lower beam
S7.8.5.3(d)(3)	S6.8.5.6.2(f) Aiming-UB VOL/VOR horizontal
S7.8.5.3(d)(3)	S14.10.4.3 Upper beam without lower beam of VHAD
S7.8.5.3(e)(1)	S14.10.5 Photometric measurements
S7.8.5.3(e)(2)	S6.8.5.6.2 Aiming
S7.8.5.3(e)(2)	S6.8.5.6.2(c) Aiming-LB VOL/VOR vertical
S7.8.5.3(e)(2)	S6.8.5.6.2(e) Aiming-UB VOL/VOR vertical
S7.8.5.3(f)(1)	S14.6.3 Optical axis marking-visual aim headlamp
S7.8.5.3(f)(2)(i)	S14.10.6.1 VOL/VOR/VO markings
S7.8.5.3(f)(2)(ii)	S14.10.6.1 VOL/VOR/VO markings
S7.8.5.3(f)(2)(iii)	S14.10.6.2 VOR/VO markings on sealed beams
S7.8.5.3(f)(2)(iv)	S14.10.6.1 VOL/VOR/VO markings
S7.8.5.3(f)(2)(v)	S14.10.6 Visual/optical identification marking
S7.9.1	Deleted-post implementation
S7.9.2	S6.8.5 Photometric testing
S7.9.2	S13 Motorcycle headlamps
S7.9.2(a)	S13.2 Motorcycle headlamp photometric requirements
S7.9.2(b)	S8.1 Headlighting systems
S7.9.3	S6.8.5.6.2(i) Aiming-Motorcycle UB
S7.9.4.1	S13.5 Motorcycle headlamp modulation system
S7.9.4.1(a)	S13.5.1(a) Rate
S7.9.4.1(b)	S13.5.1(b) Maximum power
S7.9.4.1(c)	S13.5.1(c) Minimum intensity
S7.9.4.1(d)	S13.5.1(d) Wiring
S7.9.4.1(e)	S13.5.1(e) Failure mode
S7.9.4.1(f)	S13.5.1(f) Sensor
S7.9.4.1(g)	S13.5.1(g) Voltage drop
S7.9.4.1(h)	S13.5.1(h) Full voltage operation
S7.9.4.2(a)	S13.5.2 Replacement modulator requirements
S7.9.4.2(a)	S13.5.2.1 Replacement performance requirements
S7.9.4.2(b)	S13.5.2.2 Replacement instructions
S7.9.5	S13.4 Motorcycle replaceable bulb headlamp marking
S7.9.6.1	S13.1 Motorcycle headlamp installation
S7.9.6.2(a)	S13.1.1 Single headlamp
S7.9.6.2(b)	S13.1.2 Two headlamps with both beams
S7.9.6.2(c)	S13.1.3 Two headlamps, upper beam and lower beam

APPENDIX A: FMVSS 108 REWRITE CROSS REFERENCE

CURRENT FMVSS 108 OR INCORPORATED DOCUMENT CITATION	FMVSS 108 REWRITE CITATION
S8.1	Table XXIII Abrasion test
S8.1	Table XXIII Chemical resistance test
S8.1	Table XXIII Dust test
S8.1	Table XXIII Temperature cycle test
S8.1	Table XXIII Internal heat test
S8.1	Table XXIII Humidity test
S8.1	Table XXIII Chemical resistance of replaceable lens reflectors test
S8.1	Table XXIII Corrosion resistance of replaceable lens reflectors test
S8.2(a)	Table XXIII Abrasion test-procedure
S8.2(b)	Table XXIII Abrasion test-procedure
S8.2(c)	Table XXIII Abrasion test-procedure
S8.2(d)	Table XXIII Abrasion test-procedure
S8.2(e)	Table XXIII Abrasion test-procedure
S8.3(a)	Table XXIII Chemical resistance test-procedure
S8.3(b)	Table XXIII Chemical resistance test-procedure
S8.3(c)	Table XXIII Chemical resistance test-procedure
S8.4(a)	Table XXIII Corrosion-connector test-procedure
S8.4(b)	Table XXIII Corrosion-connector test-procedure
S8.4(c)	Table XXIII Corrosion-connector test-procedure
S8.5	Table XXIII Dust test
S8.6	Table XXIII Temperature cycle test and internal test-procedure
S8.6.1	Table XXIII Temperature cycle test-procedure
S8.6.2(a)	Table XXIII Internal heat test-procedure
S8.6.2(b)	Table XXIII Internal heat test-procedure
S8.6.2(c)	Table XXIII Internal heat test-procedure
S8.7(a)	Table XXIII Humidity test-procedure
S8.7(b)	Table XXIII Humidity test-procedure
S8.7(c)	Table XXIII Humidity test-procedure
S8.7(d)	Table XXIII Humidity test-procedure
S8.7(e)	Table XXIII Humidity test-procedure
S8.7(f)	Table XXIII Humidity test-procedure
S8.8	Table XXIII Vibration test-procedure
S8.9	Table XXIII Sealing test-procedure
S8.10.1(a)	Table XXIII Chemical resistance of replaceable lens reflectors test-procedure
S8.10.1(b)	Table XXIII Chemical resistance of replaceable lens reflectors test-procedure
S8.10.1(c)	Table XXIII Chemical resistance of replaceable lens reflectors test-procedure
S8.10.2(a)	Table XXIII Corrosion resistance of replaceable lens reflectors test-procedure
S8.10.2(b)	Table XXIII Corrosion resistance of replaceable lens reflectors test-procedure
S9	Table XXIII Deflection test for replaceable light sources-procedure
S10(a)	S6.8.5.6 Headlamp photometry measurements
S10(a)	S6.8.5.6.2(g) Aiming-Simultaneous aim
S10(b)	S6.8.5.6 Headlamp photometry measurements
S10(b)	S6.8.5.6.2(g) Aiming-Simultaneous aim
S11	S6.8.5.5 Daytime running lamp (DRL) photometry measurements
S12.1	S16.1 Power loss during headlamp use
S12.2	S16.2 Manual device actuation
S12.3	S16.3 Single step actuation
S12.4	S16.4 Headlamp aiming and replacement
S12.5	S16.5 Operational temperature range and time limitation
S12.6	S16.6 ECE compliance alternative
S12.7	S16.7 Certification election
Figure 1a	S7.2.1 Taillamp photometry

APPENDIX A: FMVSS 108 REWRITE CROSS REFERENCE

CURRENT FMVSS 108 OR INCORPORATED DOCUMENT CITATION	FMVSS 108 REWRITE CITATION
Figure 1a	S7.8.1 Parking lamp photometry
Figure 1a	Table VIII Taillamp-Individual point photometry
Figure 1a	Table VIII Taillamp-Zone photometry
Figure 1a	Table XIV Parking lamp-Individual point photometry
Figure 1a	Table XIV Parking lamp-Zone photometry
Figure 1b	S7.2.1 Taillamp photometry
Figure 1b	S7.8.1 Parking lamp photometry
Figure 1b	Table VIII Taillamp-Individual point photometry
Figure 1b	Table VIII Taillamp-Zone photometry
Figure 1b	Table XIV Parking lamp-Individual point photometry
Figure 1b	Table XIV Parking lamp-Zone photometry
Figure 1b, Footnote 1	Table VIII Taillamp-Maximum photometric intensity
Figure 1b, Footnote 2	Table XIV Parking lamp-Maximum photometric intensity
Figure 1c	S7.2.1 Taillamp photometry
Figure 1c	S7.8.1 Parking lamp photometry
Figure 1c	Table VIII Taillamp-Individual point photometry
Figure 1c	Table VIII Taillamp-Zone photometry
Figure 1c	Table XIV Parking lamp-Individual point photometry
Figure 1c	Table XIV Parking lamp-Zone photometry
Figure 2	S7.6.1 Backup lamp photometry
Figure 2, Footnote 1	Table XII Single backup lamp system-Zone photometry
Figure 2, Footnote 1	Table XII Two backup lamp system-Zone photometry
Figure 2, Footnote 1	Table XII Footnote 2
Figure 2, Footnote 1	Table XII Footnote 3
Figure 4-1	Figure 3
Figure 4-2	Figure 3
Figure 4-3	Figure 3
Figure 4-4	Figure 3
Figure 5	Figure 5
Figure 6	Figure 6
Figure 7	Figure 7
Figure 8	Figure 8
Figure 9	Figure 9
Figure 10	S7.9.2 High mounted stop lamp photometry
Figure 10	Table XV High mounted stop lamp-Individual point photometry
Figure 10	Table XV High mounted stop lamp-Zone photometry
Figure 10, Footnote 1	Table XV Footnote 4
Figure 10, Footnote 2	Table XV Footnote 2
Figure 11	Relocate to Part 564, Appendix C
Figure 12	Relocate to Part 564, Appendix C
Figure 13	Relocate to Part 564, Appendix C
Figure 14	Relocate to Part 564, Appendix C
Figure 15-1	Table XVIII Upper beam #6 photometry
Figure 15-1	Table XIX Lower beam #1M photometry
Figure 15-1	Table XIX Lower beam #5M photometry
Figure 15-1	Table XVIII Upper beam #1 photometry
Figure 15-2	Table XVIII Upper beam #1 photometry
Figure 15-2	Table XVIII Upper beam #6 photometry
Figure 15-2	Table XIX Lower beam #1V photometry
Figure 15-2	Table XIX Lower beam #4V photometry
Figure 16	Figure 14
Figure 17-1	Table XVIII Upper beam #2 photometry
Figure 17-1	Table XIX Lower beam #2M photometry
Figure 17-2	Table XVIII Upper beam #2 photometry
Figure 17-2	Table XIX Lower beam #2V photometry
Figure 18	Relocate to Part 564, Appendix C
Figure 19	Table V Lens area visibility
Figure 19, Footnote 2	Table V Footnote 3

APPENDIX A: FMVSS 108 REWRITE CROSS REFERENCE

CURRENT FMVSS 108 OR INCORPORATED DOCUMENT CITATION	FMVSS 108 REWRITE CITATION
Figure 20	Table V Luminous intensity visibility
Figure 20, Footnote 2	Table V Footnote 4
Figure 21	Relocate to Part 564, Appendix C
Figure 22	Figure 15
Figure 25	Figure 10
Figure 26	Table II Replaceable bulb headlamps-2 lamp system-with HB2
Figure 26	Table II Replaceable bulb headlamps-2 lamp system-without HB2
Figure 26	Table II Replaceable bulb headlamps-4 lamp system-with HB2
Figure 26	Table II Replaceable bulb headlamps-4 lamp system-without HB2
Figure 27-1	Table XVIII Upper beam #3 photometry
Figure 27-1	Table XIX Lower beam #3M photometry
Figure 27-2	Table XVIII Upper beam #3 photometry
Figure 27-2	Table XIX Lower beam #3V photometry
Figure 28-1, Types 1A1, 1C1, and 1G1	Table XVIII Upper beam #4 photometry
Figure 28-1, Types 2A1, 2C1, and 2G1	Table XVIII Upper beam #5 photometry
Figure 28-2, Types 1A1, 1C1, and 1G1	Table XVIII Upper beam #4 photometry
Figure 28-2, Types 2A1, 2C1 and 2G1	Table XIX Lower beam #2V photometry
Figure 28-2, Types 2A1, 2C1, and 2G1	Table XVIII Upper beam #5 photometry
Figure 28-2, Types 2A1, 2C1, and 2G1	Table XIX Lower beam #4M photometry
Figure 29	S7.12.1.2 Retroreflective sheeting photometry
Figure 29	Table XVI Red C2 sheeting photometry
Figure 29	Table XVI Red C3 sheeting photometry
Figure 29	Table XVI Red C4 sheeting photometry
Figure 29	Table XVI White C2 sheeting photometry
Figure 29	Table XVI White C3 sheeting photometry
Figure 29	Table XVI White C4 sheeting photometry
Figure 30-1	Figure 11
Figure 30-2	Figure 11
Figure 30-3	Figure 11
Figure 30-4	Figure 11
Figure 31	Figure 13
Figure 32	Table XX Motor driven cycle photometry
Figure 32	Table XX Motor driven cycle with single lamp photometry
Figure 32	Table XX Motorcycle photometry
Table I	S1 Scope
Table I	S6.1 Required lamps, reflective devices, and associated equipment by vehicle type
Table I	S6.1.1 Quantity
Table I	S6.1.2 Color
Table I	S6.2.3 Auxiliary lamp or reflective device requirements
Table I	S6.6 Associated equipment
Table I	S7.14 Associated equipment
Table I	Table I Lighting device
Table I	Table I Mounting height
Table I	Table I Mounting location
Table I	Table I Number and color
Table II	S6.1 Required lamps, reflective devices, and associated equipment by vehicle type
Table II	S6.1.1 Quantity
Table II	S6.1.2 Color
Table II	S6.1.3 Mounting location and height
Table II	S6.2.3 Auxiliary lamp or reflective device requirements
Table II	Table I Lighting device
Table II	Table I Mounting height
Table II	Table I Mounting location
Table II	Table I Number and color
Table II heading	S6.1.3.1 Mounting height
Table III	S1 Scope

APPENDIX A:
FMVSS 108 REWRITE
CROSS REFERENCE

CURRENT FMVSS 108 OR INCORPORATED DOCUMENT CITATION	FMVSS 108 REWRITE CITATION
Table III	S6.1 Required lamps, reflective devices, and associated equipment by vehicle type
Table III	S6.1.1 Quantity
Table III	S6.1.2 Color
Table III	S6.2.3 Auxiliary lamp or reflective device requirements
Table III	S6.6 Associated equipment
Table III	S7.14 Associated equipment
Table III	Table I Lighting device
Table III	Table I Mounting height
Table III	Table I Mounting location
Table III	Table I Number and color
Table IV	S6.1 Required lamps, reflective devices, and associated equipment by vehicle type
Table IV	S6.1.1 Quantity
Table IV	S6.1.2 Color
Table IV	S6.1.3 Mounting location and height
Table IV	S6.2.3 Auxiliary lamp or reflective device requirements
Table IV	Table I Lighting device
Table IV	Table I Mounting height
Table IV	Table I Mounting location
Table IV	Table I Number and color
Table IV heading	S6.1.3.1 Mounting height
Table IV, footnote 1	S4 Definitions-Overall width
SAE device documents for photometry distance	S6.8.5.1 Photometry ex headlamp, license lamp, and DRL
SAE device documents referencing SAE J575	S6.8.1 Physical tests
SAE device documents referencing SAE J575	S6.8.5 Photometric testing
SAE J186a, Sep 1977, 2.1	S4 Definitions-High mounted stop lamp
SAE J186a, Sep 1977, 3	S7.9.3 High mounted stop lamp physical tests
SAE J186a, Sep 1977, 3.10	S6.8.5.1 Photometry ex headlamp, license lamp, and DRL
SAE J222, Dec 1970, 2	S4 Definitions-Parking lamps
SAE J222, Dec 1970, 3	S7.8.2 Parking lamp physical tests
SAE J387, Nov 1987	S4 Definitions-Optically combined
SAE J564a, Apr 1964	S7.14.4 Headlamp beam switching device
SAE J564a, Apr 1964	S7.14.5.1 Indicator size and location
SAE J565b, Feb 1969	S7.14.4.1 Semi-automatic headlamp beam switching device
SAE J565b, Feb 1969, 1	S4 Definitions-Semiautomatic headlamp beam switching device
SAE J565b, Feb 1969, 2	S7.14.4.1.1 Operating instructions
SAE J565b, Feb 1969, 4.2	Table XXI Semiautomatic headlamp beam switching device-Sensitivity test
SAE J565b, Feb 1969, 4.3	Table XXI Semiautomatic headlamp beam switching device-Voltage regulation test
SAE J565b, Feb 1969, 4.4	S7.14.4.1.2 Manual override
SAE J565b, Feb 1969, 4.4	Table XXI Semiautomatic headlamp beam switching device-Manual override test
SAE J565b, Feb 1969, 4.5	Table XXI Semiautomatic headlamp beam switching device-Warmup test
SAE J565b, Feb 1969, 4.6	S7.14.4.1.3 Fail safe operation
SAE J565b, Feb 1969, 4.7	Table XXI Semiautomatic headlamp beam switching device-Temperature test
SAE J565b, Feb 1969, 4.8	Table XXI Semiautomatic headlamp beam switching device-Dust test
SAE J565b, Feb 1969, 4.9	Table XXI Semiautomatic headlamp beam switching device-Corrosion test
SAE J565b, Feb 1969, 4.10	Table XXI Semiautomatic headlamp beam switching device-Vibration test
SAE J565b, Feb 1969, 4.11	Table XXI Semiautomatic headlamp beam switching device-Sunlight test
SAE J565b, Feb 1969, 4.12	Table XXI Semiautomatic headlamp beam switching device-Durability test
SAE J565b, Feb 1969, 4.13	S7.14.4.1.4 Automatic dimming indicator
SAE J565b, Feb 1969, 4.13	Table XXI Semiautomatic headlamp beam switching device-Return to upper beam test
SAE J565b, Feb 1969, 4.16	S7.14.4.1.5 Lens accessibility

APPENDIX A:
FMVSS 108 REWRITE
CROSS REFERENCE

CURRENT FMVSS 108 OR INCORPORATED DOCUMENT CITATION	FMVSS 108 REWRITE CITATION
SAE J565b, Feb 1969, 4.17	S7.14.4.1.6 Mounting height
SAE J566, Jan 1960, 1	S8.1.5 Headlamp adjustments
SAE J566, Jan 1960, 2	S8.1.5 Headlamp adjustments
SAE J566, Jan 1960, 3	S8.1.5 Headlamp adjustments
SAE J575, Dec 1988, 2.1	S6.8.2 Samples for test
SAE J575, Dec 1988, 2.3	S6.8.2 Samples for test
SAE J575, Dec 1988, 3	S6.8.3 Laboratory facilities
SAE J575, Dec 1988, 4.1	Table XXIII Vibration test-procedure
SAE J575, Dec 1988, 4.4	Table XXIII Corrosion test-procedure
SAE J575, Dec 1988, 4.6.2.1	S6.8.5.6.3 Positioner
SAE J575, Dec 1988, 4.6.2.2	S6.8.5.6.4 Photometer
SAE J575, Dec 1988, 4.6.2.3	S6.8.5.6.4 Photometer
SAE J575, Dec 1988, 4.6.2.3.1	S6.8.5.6.4 Photometer
SAE J575, Dec 1988, 4.6.3	S6.8.5.6 Headlamp photometry measurements
SAE J575, Dec 1988, 4.6.3.3	S6.8.5.6.5 Location of test points
SAE J575, Dec 1988, 4.6.3.4	S6.8.5.6.1 Seasoning and test voltage
SAE J575d, Aug 1967, B	S6.8.2 Samples for test
SAE J575d, Aug 1967, D	S6.8.3 Laboratory facilities
SAE J575d, Aug 1967, E	Table XXII Vibration test
SAE J575d, Aug 1967, F	Table XXII Moisture test
SAE J575d, Aug 1967, G	Table XXII Dust test
SAE J575d, Aug 1967, H	Table XXII Corrosion test
SAE J575d, Aug 1967, J	S6.8.5.1 Photometry ex headlamp, license lamp, and DRL
SAE J575d, Aug 1967, J	S6.8.5.1.1 Location of test points
SAE J575d, Aug 1967, J	Table X Footnote 2
SAE J575d, Aug 1967, J	Table XI Footnote 2
SAE J575d, Aug 1967, J	Table XII Footnote 1
SAE J575d, Aug 1967, J	Table XIV Footnote 1
SAE J575d, Aug 1967, J	Table XVII Red lamp photometry
SAE J575d, Aug 1967, J	Table XVII Footnote 2
SAE J575d, Aug 1967, K	Table XXII Out of focus test
SAE J575e, Aug 1970, B	S6.8.2 Samples for test
SAE J575e, Aug 1970, D	S6.8.3 Laboratory facilities
SAE J575e, Aug 1970, E	Table XXII Vibration test
SAE J575e, Aug 1970, F	Table XXII Moisture test
SAE J575e, Aug 1970, G	Table XXII Dust test
SAE J575e, Aug 1970, H	Table XXII Corrosion test
SAE J575e, Aug 1970, J	S6.8.5.1 Photometry ex headlamp, license lamp, and DRL
SAE J575e, Aug 1970, J	S6.8.5.1.1 Location of test points
SAE J575e, Aug 1970, J	Table VI Footnote 2
SAE J575e, Aug 1970, J	Table VII Footnote 2
SAE J575e, Aug 1970, J	Table VIII Footnote 1
SAE J575e, Aug 1970, J	Table IX Footnote 2
SAE J575e, Aug 1970, J	Table XV Footnote 1
SAE J576, Jul 1991	Table XXII Plastic optical material tests
SAE J576, Jul 1991, 2.2.1	S4 Definitions-Material
SAE J576, Jul 1991, 2.2.1.1	S4 Definitions-Coated materials
SAE J576, Jul 1991, 2.2.2.1	S4 Definitions-Exposed
SAE J576, Jul 1991, 2.2.2.2	S4 Definitions-Protected
SAE J576, Jul 1991, 2.2.3.1	S4 Definitions-Color bleeding
SAE J576, Jul 1991, 2.2.3.2	S4 Definitions-Crazing
SAE J576, Jul 1991, 2.2.3.3	S4 Definitions-Cracking
SAE J576, Jul 1991, 2.2.3.4	S4 Definitions-Haze

APPENDIX A: FMVSS 108 REWRITE CROSS REFERENCE

CURRENT FMVSS 108 OR INCORPORATED DOCUMENT CITATION	FMVSS 108 REWRITE CITATION
SAE J576, Jul 1991, 2.2.3.5	S4 Definitions-Delamination
SAE J576, Jul 1991, 5	S6.8.4.1 UV tracer
SAE J578c, Feb 1977	Table XXII Color test
SAE J578c, Feb 1977, 2	S4 Definitions-Color
SAE J578c, Feb 1977, Figure 1	Figure 1
SAE J580, Dec 1986, 2.1	S4 Definitions-Sealed beam headlamp assembly
SAE J580, Dec 1986, 2.2	S4 Definitions-Mounting ring
SAE J580, Dec 1986, 2.3	S4 Definitions-Retaining ring
SAE J580, Dec 1986, 2.4	S4 Definitions-Aiming screws
SAE J580, Dec 1986, 4.1.2	S9.4 Sealed beam headlamp physical tests
SAE J580, Dec 1986, 4.1.2	Table XXIII Corrosion test
SAE J580, Dec 1986, 4.2	S9.4 Sealed beam headlamp physical tests
SAE J580, Dec 1986, 4.2	Table XXIII Aiming adjustment test-Laboratory-procedure
SAE J580, Dec 1986, 4.2	Table XXIII Aiming adjustment test-On vehicle-procedure
SAE J580, Dec 1986, 4.3	S9.4 Sealed beam headlamp physical tests
SAE J580, Dec 1986, 4.3	Table XXIII Inward force test-procedure
SAE J580, Dec 1986, 4.4	S9.4 Sealed beam headlamp physical tests
SAE J580, Dec 1986, 4.4	Table XXIII Headlamp connector test-procedure
SAE J580, Dec 1986, 4.5	S9.4 Sealed beam headlamp physical tests
SAE J580, Dec 1986, 4.5	Table XXIII Torque deflection test-procedure
SAE J580, Dec 1986, 5.1.1.2	Table XXIII Corrosion test
SAE J580, Dec 1986, 5.1.2.1	Table XXIII Aiming adjustment test-Laboratory-performance requirement
SAE J580, Dec 1986, 5.1.2.2	Table XXIII Aiming adjustment test-Laboratory-performance requirement
SAE J580, Dec 1986, 5.1.3	Table XXIII Inward force test-performance requirement
SAE J580, Dec 1986, 5.1.4	Table XXIII Headlamp connector test-performance requirement
SAE J580, Dec 1986, 5.1.5	Table XXIII Torque deflection test-performance requirement
SAE J580, Dec 1986, 5.1.6	Table XXIII Retaining ring test-performance requirement
SAE J580, Dec 1986, Figure 1	Figure 4
SAE J580, Dec 1986, Figure 1	Table XXIII Headlamp connector test
SAE J580, Dec 1986, Figure 2	Figure 18
SAE J580, Dec 1986, Figure 3	Figure 16
SAE J580, Dec 1986, Figure 4	Figure 17
SAE J584, Apr 1964	S4 Definitions-Motor driven cycle
SAE J584, Apr 1964	S4 Definitions-Motorcycle or motor driven cycle headlamp
SAE J584, Apr 1964	S6.8.5.6.2(j) Aiming-Motorcycle LB
SAE J584, Apr 1964	S13.3 Motorcycle headlamp physical tests
SAE J584, Oct 1993	S6.8.5.6.2(i) Aiming-Motorcycle UB
SAE J585e, Sep 1977, 2.1	S4 Definitions-Taillamps
SAE J585e, Sep 1977, 3	S7.2.2 Taillamp physical tests
SAE J585e, Sep 1977, 3.1	S7.2.1.1 Multiple compartments and multiple lamps
SAE J585e, Sep 1977, 3.1	S7.2.1.1.1 Lamps installed on vehicles 2032 mm or more in overall width
SAE J585e, Sep 1977, 3.6.2	S6.8.5.1.2 Multiple compartment and lamp photometry
SAE J585e, Sep 1977, 3.6.2(a)	S6.8.5.1.2.1 Photometry of all compartments/lamps together
SAE J585e, Sep 1977, 3.6.2(b)	S6.8.5.1.2.2 Photometry of individual compartments/lamps
SAE J585e, Sep 1977, 4	Table V SAE taillamp visibility
SAE J586, Feb 1984, 2.1	S4 Definitions-Stop lamps
SAE J586, Feb 1984, 4.1.5.2	S6.8.5.1.2 Multiple compartment and lamp photometry
SAE J586, Feb 1984, 4.1.5.2.1	S6.8.5.1.2.1 Photometry of all compartments/lamps together
SAE J586, Feb 1984, 4.1.5.2.2	S6.8.5.1.2.2 Photometry of individual compartments/lamps
SAE J586, Feb 1984, 5	S7.3.2 Stop lamp physical tests
SAE J586, Feb 1984, 5.1.5.2	S7.3.1.1 Multiple compartments and multiple lamps
SAE J586, Feb 1984, 5.1.5.3	S7.3.1.2 Ratio to taillamps
SAE J586, Feb 1984, 5.1.5.3	Table IX Stop lamp-Photometric ratio

APPENDIX A:
FMVSS 108 REWRITE
CROSS REFERENCE

CURRENT FMVSS 108 OR INCORPORATED DOCUMENT CITATION	FMVSS 108 REWRITE CITATION
SAE J586, Feb 1984, 5.1.5.3	Table IX Footnote 6
SAE J586, Feb 1984, 5.1.5.3	Table IX Footnote 7
SAE J586, Feb 1984, 5.3.1	S7.3.3 Combined lamp bulb indexing
SAE J586, Feb 1984, 5.4.1	Table V SAE stop lamp visibility
SAE J586, Feb 1984, Table 1	S7.3.1 Stop lamp photometry
SAE J586, Feb 1984, Table 1	Table IX Stop lamp-Individual point photometry
SAE J586, Feb 1984, Table 1	Table IX Stop lamp-Zone photometry
SAE J586, Feb 1984, Table 1, Footnote a	Table IX Footnote 1
SAE J586, Feb 1984, Table 1, Footnote b	Table IX Footnote 3
SAE J587, Oct 1981, 2	S4 Definitions-License plate lamps
SAE J587, Oct 1981, 3	S7.7.3 License plate lamp physical tests
SAE J587, Oct 1981, 4	S7.7.3 License plate lamp physical tests
SAE J587, Oct 1981, 5	S7.7.3 License plate lamp physical tests
SAE J587, Oct 1981, 6.1	S6.6.1 License plate holder
SAE J587, Oct 1981, 6.2	S6.6.1 License plate holder
SAE J587, Oct 1981, 6.3	S6.8.5.3 License plate lamp photometry
SAE J587, Oct 1981, 6.3	S7.7.1 License plate lamp installation
SAE J587, Oct 1981, 6.4	S6.1.4 License plate lamp
SAE J587, Oct 1981, 6.5	S7.7.1.1 Incident light from a single lamp
SAE J587, Oct 1981, 6.6	S7.7.1.2 Incident light from multiple lamps
SAE J587, Oct 1981, 6.7	S6.8.5.3.1 Illumination surface
SAE J587, Oct 1981, 6.8	S6.8.5.3.2 Test stations
SAE J587, Oct 1981, 7	S7.7.2 License plate lamp photometry
SAE J587, Oct 1981, Figure 1	Table XIII License plate lamp target locations
SAE J587, Oct 1981, Figure 2	Table XIII License plate lamp target locations
SAE J588, Nov 1984, 2.1	S4 Definitions-Turn signal lamps
SAE J588, Nov 1984, 4	S7.1.3 Turn signal lamp physical tests
SAE J588, Nov 1984, 4.1.5.2	S6.8.5.1.2 Multiple compartment and lamp photometry
SAE J588, Nov 1984, 4.1.5.2.1	S6.8.5.1.2.1 Photometry of all compartments/lamps together
SAE J588, Nov 1984, 4.1.5.2.2	S6.8.5.1.2.2 Photometry of individual compartments/lamps
SAE J588, Nov 1984, 5.1.5.2	S7.1.1.3 Multiple compartments and multiple lamps
SAE J588, Nov 1984, 5.1.5.2	S7.1.2.2 Multiple compartments and multiple lamps
SAE J588, Nov 1984, 5.1.5.3	S7.1.1.3.2 Ratio to parking lamps
SAE J588, Nov 1984, 5.1.5.3	S7.1.2.3 Ratio to taillamps
SAE J588, Nov 1984, 5.1.5.3	Table VI Front turn signal lamp-Photometric ratio
SAE J588, Nov 1984, 5.1.5.3	Table VII Rear turn signal lamp-Photometric ratio
SAE J588, Nov 1984, 5.1.5.3	Table VII Footnote 8
SAE J588, Nov 1984, 5.1.5.4	S7.1.1.2 Spacing to other lamps
SAE J588, Nov 1984, 5.1.5.4	Table VI Front turn signal lamp-1.5 x base individual point photometry
SAE J588, Nov 1984, 5.1.5.4	Table VI Front turn signal lamp-1.5 x base zone photometry
SAE J588, Nov 1984, 5.1.5.4	Table VI Front turn signal lamp-2 x base individual point photometry
SAE J588, Nov 1984, 5.1.5.4	Table VI Front turn signal lamp-2 x base zone photometry
SAE J588, Nov 1984, 5.1.5.4	Table VI Front turn signal lamp-2.5 x base individual point photometry
SAE J588, Nov 1984, 5.1.5.4	Table VI Front turn signal lamp-2.5 x base zone photometry
SAE J588, Nov 1984, 5.1.5.4.1	S7.1.1.2.1 Spacing measurement for non reflector lamps
SAE J588, Nov 1984, 5.1.5.4.2	S7.1.1.2.2 Spacing measurement for lamps with reflectors
SAE J588, Nov 1984, 5.3.1	S7.1.4 Combined lamp bulb indexing
SAE J588, Nov 1984, 5.3.2	Table IV Front turn signal lamp-Effective projected luminous lens area
SAE J588, Nov 1984, 5.4.1	Table V SAE turn signal lamp visibility
SAE J588, Nov 1984, Table 1	S7.1.1.1 Front turn signal lamp photometry
SAE J588, Nov 1984, Table 1	S7.1.2.1 Rear turn signal lamp photometry
SAE J588, Nov 1984, Table 1	Table VI Front turn signal lamp-Base zone photometry
SAE J588, Nov 1984, Table 1	Table VII Rear turn signal lamp-Amber lamp zone photometry
SAE J588, Nov 1984, Table 1	Table VII Rear turn signal lamp-Red lamp zone photometry
SAE J588, Nov 1984, Table 1	Table VII Footnote 5
SAE J588, Nov 1984, Table 1, Footnote a	Table VI Footnote 1

APPENDIX A: FMVSS 108 REWRITE CROSS REFERENCE

CURRENT FMVSS 108 OR INCORPORATED DOCUMENT CITATION	FMVSS 108 REWRITE CITATION
SAE J588, Nov 1984, Table 1, Footnote a	Table VII Footnote 1
SAE J588, Nov 1984, Table 1, Footnote b	Table VII Footnote 4
SAE J588, Nov 1984, Table 2	S7.1.1.2.3 Spacing based photometric multipliers
SAE J588, Nov 1984, Table 2	Table VI Front turn signal lamp-1.5 x base individual point photometry
SAE J588, Nov 1984, Table 2	Table VI Front turn signal lamp-2 x base individual point photometry
SAE J588, Nov 1984, Table 2	Table VI Front turn signal lamp-2 x base zone photometry
SAE J588, Nov 1984, Table 2	Table VI Front turn signal lamp-2.5 x base individual point photometry
SAE J588, Nov 1984, Table 2	Table VI Front turn signal lamp-2.5 x base zone photometry
SAE J588, Nov 1984, Table 2	Table VI Front turn signal lamp-1.5 x base zone photometry
SAE J588, Nov 1984, Table 3	Table VI Front turn signal lamp-Base individual point photometry
SAE J588, Nov 1984, Table 3	Table VII Rear turn signal lamp-Amber lamp individual point photometry
SAE J588, Nov 1984, Table 3	Table VII Rear turn signal lamp-Red lamp individual point photometry
SAE J588e, Sep 1970	S7.14.3 Turn signal pilot indicator
SAE J588e, Sep 1970	S7.14.3.1 Indicator size and color
SAE J588e, Sep 1970, 3.9.1	Table VII Footnote 6
SAE J589, Apr 1964	S4 Definitions-Turn signal operating unit
SAE J589, Apr 1964	S7.14.1 Turn signal operating unit
SAE J589, Apr 1964	Table XXI Turn signal operating unit-Durability test
SAE J590b, Oct 1965	S4 Definitions-Turn signal flasher
SAE J590b, Oct 1965	S7.14.2 Turn signal flasher
SAE J590b, Oct 1965	Table XXI Turn signal flasher-Durability test
SAE J590b, Oct 1965, 1	Table XXI Turn signal flasher-Starting time test
SAE J590b, Oct 1965, 2	Table XXI Turn signal flasher-Voltage drop test
SAE J590b, Oct 1965, 3	Table XXI Turn signal flasher-Flash rate and percent current "on" time test
SAE J590b, Oct 1965, Figure 1	Figure 2
SAE J592e, Jul 1972, 2.1	S4 Definitions-Clearance lamps
SAE J592e, Jul 1972, 2.2	S4 Definitions-Side marker lamps
SAE J592e, Jul 1972, 2.3	S4 Definitions-Combination clearance and sidemarker lamps
SAE J592e, Jul 1972, 2.4	S4 Definitions-Identification lamps
SAE J592e, Jul 1972, 3	S7.4.2 Side marker lamp physical tests
SAE J592e, Jul 1972, 3	S7.5.2 Clearance and identification lamp physical tests
SAE J592e, Jul 1972, Table 1	S7.4.1 Side marker lamp photometry
SAE J592e, Jul 1972, Table 1	S7.5.1 Clearance and identification lamp photometry
SAE J592e, Jul 1972, Table 1	Table X Amber side marker lamp photometry
SAE J592e, Jul 1972, Table 1	Table X Red side marker lamp photometry
SAE J592e, Jul 1972, Table 1	Table XI Amber clearance and identification lamp photometry
SAE J592e, Jul 1972, Table 1	Table XI Red clearance and identification lamp photometry
SAE J592e, Jul 1972, Table 1, Footnote a	Table XI Footnote 3
SAE J592e, Jul 1972, Table 1, Footnote b	S7.4.1.1 Side marker lamp inboard photometry
SAE J592e, Jul 1972, Table 1, Footnote b	Table X Footnote 1
SAE J593c, Feb 1968	S4 Definitions-Backup lamp
SAE J593c, Feb 1968	S7.6.2 Color
SAE J593c, Feb 1968	S7.6.3 Backup lamp physical tests
SAE J593c, Feb 1968	Table I Activation-Backup lamps
SAE J593c, Feb 1968, Table 1, Footnote a	Table XII Single backup lamp system-Individual point photometry
SAE J593c, Feb 1968, Table 1, Footnote b	Table XII Two backup lamp system-Individual point photometry
SAE J593c, Feb 1968, Table 1, Footnote c	Table XII Backup lamp-Maximum photometric intensity
SAE J594f, Jan 1977, 2	S4 Definitions-Reflex reflectors
SAE J594f, Jan 1977, 3	S7.10.2 Reflex reflector physical tests
SAE J594f, Jan 1977, 3.1.7	S6.8.5.4 Reflex reflector photometry
SAE J594f, Jan 1977, 3.1.7	S6.8.5.4.1 Reflex reflector and retroreflective sheeting photometry measurements
SAE J594f, Jan 1977, 3.1.7	S6.8.5.4.1.1 Reflex reflector photometry measurements adjustments

APPENDIX A:
FMVSS 108 REWRITE
CROSS REFERENCE

CURRENT FMVSS 108 OR INCORPORATED DOCUMENT CITATION	FMVSS 108 REWRITE CITATION
SAE J594f, Jan 1977, 3.1.8	S6.8.2 Samples for test
SAE J594f, Jan 1977, Table 1	S7.10.1 Reflex reflector photometry
SAE J594f, Jan 1977, Table 1	Table XVI Red reflex reflector photometry
SAE J594f, Jan 1977, Table 1, Footnote a	Table XVI Amber reflex reflector photometry
SAE J594f, Jan 1977, Table 1, Footnote a	Table XVI White reflex reflector photometry
SAE J594f, Jan 1977, Table 1A	S7.10.1 Reflex reflector photometry
SAE J594f, Jan 1977, Table 1A	Table XVI Red reflex reflector photometry
SAE J594f, Jan 1977, Table 1A, Footnote a	Table XVI Amber reflex reflector photometry
SAE J594f, Jan 1977, Table 1A, Footnote a	Table XVI White reflex reflector photometry
SAE J887, Jul 1964	S4 Definitions-School bus signal lamps
SAE J887, Jul 1964	S6.4.1 Effective projected luminous lens area
SAE J887, Jul 1964	S6.4.2 Visibility
SAE J887, Jul 1964	S6.4.6 School bus signal lamp aiming
SAE J887, Jul 1964	S6.8.5.1 Photometry ex headlamp, license lamp, and DRL
SAE J887, Jul 1964	S7.13.2 School bus signal lamp physical tests
SAE J887, Jul 1964	Table I Activation-School bus signal lamps
SAE J887, Jul 1964	Table IV School bus signal lamp-Effective projected luminous lens area
SAE J887, Jul 1964	Table V School bus signal lamp visibility
SAE J887, Jul 1964, Table 1	S7.13.1 School bus signal lamp photometry
SAE J887, Jul 1964, Table 1	Table XVII School bus signal lamp photometry
SAE J910, Jan 1966, 1	S4 Definitions-Vehicular hazard warning signal operating unit
SAE J910, Jan 1966, 1	S7.14.6 Vehicular hazard warning signal operating unit
SAE J910, Jan 1966, 3(a)	S7.14.6 Vehicular hazard warning signal operating unit
SAE J910, Jan 1966, 3(b)	S7.14.6 Vehicular hazard warning signal operating unit
SAE J910, Jan 1966, 3(c)	S7.14.6.1 Operating unit switch
SAE J910, Jan 1966, 3(d)	S7.14.6 Vehicular hazard warning signal operating unit
SAE J910, Jan 1966, 3(e)	S7.14.6.1 Operating unit switch
SAE J910, Jan 1966, 4	Table XXI Vehicular hazard warning signal operating unit-Durability test
SAE J910, Jan 1966, 5	S7.14.8 Vehicular hazard warning signal pilot indicator
SAE J910, Jan 1966, 5	S7.14.8.1 Indicator size and color
SAE J945, Feb 1966	S4 Definitions-Vehicular hazard warning signal flasher
SAE J945, Feb 1966	S7.14.7 Vehicular hazard warning signal flasher
SAE J945, Feb 1966	S7.14.8 Vehicular hazard warning signal pilot indicator
SAE J945, Feb 1966, 1	Table XXI Vehicular hazard warning signal flasher- Starting time test
SAE J945, Feb 1966, 2	Table XXI Vehicular hazard warning signal flasher-Voltage drop test
SAE J945, Feb 1966, 3	Table XXI Vehicular hazard warning signal flasher-Flash rate and percent current "on" time test
SAE J945, Feb 1966, 4	Table XXI Vehicular hazard warning signal flasher-Durability test
SAE J945, Feb 1966, Figure 1	Figure 2
SAE J1383, Apr 1985, 2.1	S4 Definitions-Headlamp
SAE J1383, Apr 1985, 2.1.1	S4 Definitions-Sealed beam headlamp
SAE J1383, Apr 1985, 2.1.1	S17.3 Sealed beam headlamp markings
SAE J1383, Apr 1985, 2.2	S4 Definitions-Upper beam
SAE J1383, Apr 1985, 2.3	S4 Definitions-Lower beam
SAE J1383, Apr 1985, 2.4	S4 Definitions-Mechanically aimable headlamp
SAE J1383, Apr 1985, 2.5	S4 Definitions-Aiming plane
SAE J1383, Apr 1985, 2.6	S4 Definitions-Headlamp mechanical axis
SAE J1383, Apr 1985, 2.7	S4 Definitions-H-V axis
SAE J1383, Apr 1985, 2.9	S4 Definitions-Seasoning
SAE J1383, Apr 1985, 2.10	S4 Definitions-Design Voltage
SAE J1383, Apr 1985, 2.11	S4 Definitions-Test voltage
SAE J1383, Apr 1985, 2.12	S4 Definitions-Rated voltage
SAE J1383, Apr 1985, 4.1.4.1	S6.8.5.6.1 Seasoning and test voltage
SAE J1383, Apr 1985, 4.1.4.2	S6.8.5.6 Headlamp photometry measurements

APPENDIX A:
FMVSS 108 REWRITE
CROSS REFERENCE

CURRENT FMVSS 108 OR INCORPORATED DOCUMENT CITATION	FMVSS 108 REWRITE CITATION
SAE J1383, Apr 1985, 4.1.4.3	S6.8.5.6.1 Seasoning and test voltage
SAE J1383, Apr 1985, 4.1.4.3	S6.8.5.6.2(a) Aiming-mechanical
SAE J1383, Apr 1985, 4.2	S9.4 Sealed beam headlamp physical tests
SAE J1383, Apr 1985, 4.3	S9.4 Sealed beam headlamp physical tests
SAE J1383, Apr 1985, 4.5.1	S6.8.2 Samples for test
SAE J1383, Apr 1985, 5.3	Relocate to Part 564, Appendix C
SAE J1383, Apr 1985, 5.3.3	S17.3 Sealed beam headlamp markings
SAE J1383, Apr 1985, 5.4.3	S17.3 Sealed beam headlamp markings
SAE J1383, Apr 1985, 5.4.4	S17.3 Sealed beam headlamp markings
SAE J1383, Apr 1985, 5.4.4.1	S17.3 Sealed beam headlamp markings
SAE J1383, Apr 1985, 5.4.4.2	S17.3 Sealed beam headlamp markings
SAE J1383, Apr 1985, 5.4.4.3	S17.3 Sealed beam headlamp markings
SAE J1383, Apr 1985, 5.4.5	S17.3 Sealed beam headlamp markings
SAE J1383, Apr 1985, Figure 5	Relocate to Part 564, Appendix C
SAE J1383, Apr 1985, Figure 6	Relocate to Part 564, Appendix C
SAE J1383, Apr 1985, Figure 7	Relocate to Part 564, Appendix C
SAE J1383, Apr 1985, Figure 8	Relocate to Part 564, Appendix C
SAE J1383, Apr 1985, Figure 9	Relocate to Part 564, Appendix C
SAE J1383, Apr 1985, Figure 10	Relocate to Part 564, Appendix C
SAE J1383, Apr 1985, Figure 11	Relocate to Part 564, Appendix C
SAE J1383, Apr 1985, Figure 11	Relocate to Part 564, Appendix C
SAE J1383, Apr 1985, Figure 12	Relocate to Part 564, Appendix C
SAE J1383, Apr 1985, Figure 13	Relocate to Part 564, Appendix C
SAE J1383, Apr 1985, Figure 14	Relocate to Part 564, Appendix C
SAE J1383, Apr 1985, Figure 15	Relocate to Part 564, Appendix C
SAE J1395, Apr 1985, 2.1	S4 Definitions-Turn signal lamps
SAE J1395, Apr 1985, 4	S7.1.3 Turn signal lamp physical tests
SAE J1395, Apr 1985, 4.1.5.2	S6.8.5.1.2 Multiple compartment and lamp photometry
SAE J1395, Apr 1985, 4.1.5.2	S6.8.5.1.2.2 Photometry of individual compartments/lamps
SAE J1395, Apr 1985, 4.1.5.2	S6.8.5.1.2.3 Multiple compartment/lamp photometry for wide vehicles
SAE J1395, Apr 1985, 5.1.5.2	S7.1.1.3.2 Ratio to parking lamps and clearance lamps
SAE J1395, Apr 1985, 5.1.5.2	S7.1.2.3 Ratio to taillamps and clearance lamps
SAE J1395, Apr 1985, 5.1.5.2	Table VI Front turn signal lamp-Photometric ratio
SAE J1395, Apr 1985, 5.1.5.2	Table VI Footnote 4
SAE J1395, Apr 1985, 5.1.5.2	Table VII Rear turn signal lamp-Photometric ratio
SAE J1395, Apr 1985, 5.1.5.2	Table VII Footnote 7
SAE J1395, Apr 1985, 5.1.5.2	Table VII Footnote 8
SAE J1395, Apr 1985, 5.1.5.3	Table VII Footnote 6
SAE J1395, Apr 1985, 5.1.5.4	S7.1.1.2 Spacing to other lamps
SAE J1395, Apr 1985, 5.1.5.4	Table VI Front turn signal lamp-1.5 x base individual point photometry
SAE J1395, Apr 1985, 5.1.5.4	Table VI Front turn signal lamp-1.5 x base zone photometry
SAE J1395, Apr 1985, 5.1.5.4	Table VI Front turn signal lamp-2 x base individual point photometry
SAE J1395, Apr 1985, 5.1.5.4	Table VI Front turn signal lamp-2 x base zone photometry
SAE J1395, Apr 1985, 5.1.5.4	Table VI Front turn signal lamp-2.5 x base individual point photometry
SAE J1395, Apr 1985, 5.1.5.4	Table VI Front turn signal lamp-2.5 x base zone photometry
SAE J1395, Apr 1985, 5.1.5.5	S7.1.1.2.1 Spacing measurement for non reflector lamps
SAE J1395, Apr 1985, 5.1.5.6	S7.1.1.2.2 Spacing measurement for lamps with reflectors
SAE J1395, Apr 1985, 5.3.1	S7.1.4 Combined lamp bulb indexing
SAE J1395, Apr 1985, 5.3.2	Table IV Front turn signal lamp-Effective projected luminous lens area
SAE J1395, Apr 1985, 5.3.2	Table IV Rear turn signal lamp-Effective projected luminous lens area
SAE J1395, Apr 1985, 5.4.1	Table V SAE turn signal lamp visibility
SAE J1395, Apr 1985, Table 1	S7.1.1.1 Front turn signal lamp photometry
SAE J1395, Apr 1985, Table 1	S7.1.2.1 Rear turn signal lamp photometry
SAE J1395, Apr 1985, Table 1	Table VI Front turn signal lamp-Base zone photometry
SAE J1395, Apr 1985, Table 1	Table VII Rear turn signal lamp-Amber lamp zone photometry
SAE J1395, Apr 1985, Table 1	Table VII Rear turn signal lamp-Red lamp zone photometry
SAE J1395, Apr 1985, Table 1	Table VII Footnote 5

APPENDIX A: FMVSS 108 REWRITE CROSS REFERENCE

CURRENT FMVSS 108 OR INCORPORATED DOCUMENT CITATION	FMVSS 108 REWRITE CITATION
SAE J1395, Apr 1985, Table 1, Footnote a	Table VI Footnote 1
SAE J1395, Apr 1985, Table 1, Footnote a	Table VII Footnote 1
SAE J1395, Apr 1985, Table 1, Footnote b	Table VII Footnote 4
SAE J1395, Apr 1985, Table 2	S7.1.1.2.3 Spacing based photometric multipliers
SAE J1395, Apr 1985, Table 2	Table VI Front turn signal lamp-1.5 x base individual point photometry
SAE J1395, Apr 1985, Table 2	Table VI Front turn signal lamp-1.5 x base zone photometry
SAE J1395, Apr 1985, Table 2	Table VI Front turn signal lamp-2 x base individual point photometry
SAE J1395, Apr 1985, Table 2	Table VI Front turn signal lamp-2 x base zone photometry
SAE J1395, Apr 1985, Table 2	Table VI Front turn signal lamp-2.5 x base individual point photometry
SAE J1395, Apr 1985, Table 2	Table VI Front turn signal lamp-2.5 x base zone photometry
SAE J1395, Apr 1985, Table 3	Table VI Front turn signal lamp-Base individual point photometry
SAE J1395, Apr 1985, Table 3	Table VII Rear turn signal lamp-Amber lamp individual point photometry
SAE J1395, Apr 1985, Table 3	Table VII Rear turn signal lamp-Red lamp individual point photometry
SAE J1398, May 1985, 2.1	S4 Definitions-Stop lamps
SAE J1398, May 1985, 4.1.5.2	S6.8.5.1.2 Multiple compartment and lamp photometry
SAE J1398, May 1985, 4.1.5.2	S6.8.5.1.2.2 Photometry of individual compartments/lamps
SAE J1398, May 1985, 4.1.5.2	S6.8.5.1.2.3 Multiple compartment/lamp photometry for wide vehicles
SAE J1398, May 1985, 5	S7.3.2 Stop lamp physical test requirements
SAE J1398, May 1985, 5.1.5.2	S7.3.1.2 Ratio to taillamps
SAE J1398, May 1985, 5.1.5.2	Table IX Stop lamp-Photometric ratio
SAE J1398, May 1985, 5.1.5.2	Table IX Footnote 6
SAE J1398, May 1985, 5.1.5.2	Table IX Footnote 7
SAE J1398, May 1985, 5.3.2	Table IV Stop lamp-Effective projected luminous lens area
SAE J1398, May 1985, 5.4.1	Table V SAE stop lamp visibility
SAE J1398, May 1985, Table 1	S7.3.1 Stop lamp photometry
SAE J1398, May 1985, Table 1	Table IX Stop lamp-Individual point photometry
SAE J1398, May 1985, Table 1	Table IX Stop lamp-Zone photometry
SAE J1398, May 1985, Table 1, Footnote a	Table IX Footnote 1
SAE J1398, May 1985, Table 1, Footnote b	Table IX Footnote 3
Interpretation-Alkire 11/28/89	S6.2.2 Lamp or reflective device obstructed
Interpretation-Camp 6/17/97	S4 Definitions-Overall width
Interpretation-Clarke 7/28/05	S6.2.5 Auxiliary identification lamps
Interpretation-Farber 5/26/00	S6.1.5.1 Stop lamp activation
Interpretation-Farber 5/26/00	Table I Activation-Stop lamps
Interpretation-King 7/12/00	S6.1.3 Mounting location and height
Interpretation-Parkyn 6/1/98	Table IX Footnote 5
Interpretation-Spingler 4/6/2000	S14.10.1.5 Measuring the cutoff parameter
Interpretation-Spingler 7/2/99	Table XIX 10° U-90°U Test area
New	Figure 12-1
New	Figure 12-2
New language	Table V Footnote 1
New reference [49 CFR 571.5(j)]	S5.2 Incorporated by reference
New reference to other sections	S17.5 Additional headlamp markings

APPENDIX B: FMVSS 108 REWRITE CROSS REFERENCE

FMVSS 108 REWRITE CITATION	CURRENT FMVSS 108 OR INCORPORATED DOCUMENT CITATION
S1 *Scope*	S1
S1 *Scope*	Table I
S1 *Scope*	Table III
S2 *Purpose*	S2
S3 *Application*	S3 (except section citation)
S4 *Definitions*	S4
S4 *Definitions-Aiming plane*	SAE J1383, Apr 1985, 2.5
S4 *Definitions-Aiming screws*	SAE J580, Dec 1986, 2.4
S4 *Definitions-Backup lamp*	SAE J593c, Feb 1968
S4 *Definitions-Clearance lamps*	SAE J592e, Jul 1972, 2.1
S4 *Definitions-Coated materials*	SAE J576, Jul 1991, 2.2.1.1
S4 *Definitions-Color*	SAE J578c, Feb 1977, 2
S4 *Definitions-Color bleeding*	SAE J576, Jul 1991, 2.2.3.1
S4 *Definitions-Combination clearance and sidemarker lamps*	SAE J592e, Jul 1972, 2.3
S4 *Definitions-Cracking*	SAE J576, Jul 1991, 2.2.3.3
S4 *Definitions-Crazing*	SAE J576, Jul 1991, 2.2.3.2
S4 *Definitions-Dayime Running Lamp*	SAE J2087, Aug 1991 & Jul 1997
S4 *Definitions-Delamination*	SAE J576, Jul 1991, 2.2.3.5
S4 *Definitions-Design Voltage*	SAE J1383, Apr 1985, 2.10
S4 *Definitions-Effective projected luminous lens area*	S6.3
S4 *Definitions-Exposed*	SAE J576, Jul 1991, 2.2.2.1
S4 *Definitions-Haze*	SAE J576, Jul 1991, 2.2.3.4
S4 *Definitions-Headlamp*	SAE J1383, Apr 1985, 2.1
S4 *Definitions-Headlamp mechanical axis*	SAE J1383, Apr 1985, 2.6
S4 *Definitions-High mounted stop lamp*	SAE J186a, Sep 1977, 2.1
S4 *Definitions-H-V axis*	SAE J1383, Apr 1985, 2.7
S4 *Definitions-Identification lamps*	SAE J592e, Jul 1972, 2.4
S4 *Definitions-License plate lamps*	SAE J587, Oct 1981, 2
S4 *Definitions-Lower beam*	SAE J1383, Apr 1985, 2.3
S4 *Definitions-Material*	SAE J576, Jul 1991, 2.2.1
S4 *Definitions-Mechanically aimable headlamp*	SAE J1383, Apr 1985, 2.4
S4 *Definitions-Motor driven cycle*	SAE J584, Apr 1964
S4 *Definitions-Motorcycle or motor driven cycle headlamp*	SAE J584, Apr 1964
S4 *Definitions-Mounting ring*	SAE J580, Dec 1986, 2.2
S4 *Definitions-Mounting ring (type F sealed beam)*	S7.3.7(e)(1)
S4 *Definitions-Optically combined*	S5.1.1.11
S4 *Definitions-Optically combined*	S5.4(b)
S4 *Definitions-Optically combined*	S5.4(c)
S4 *Definitions-Optically combined*	SAE J387, Nov 1987
S4 *Definitions-Overall width*	Interpretation-Camp 6/17/97
S4 *Definitions-Overall width*	Table IV, footnote 1
S4 *Definitions-Parking lamps*	SAE J222, Dec 1970, 2
S4 *Definitions-Protected*	SAE J576, Jul 1991, 2.2.2.2
S4 *Definitions-Rated voltage*	SAE J1383, Apr 1985, 2.12
S4 *Definitions-Reflex reflectors*	SAE J594f, Jan 1977, 2
S4 *Definitions-Retaining ring*	SAE J580, Dec 1986, 2.3
S4 *Definitions-Retaining ring (type F sealed beam)*	S7.3.7(e)(2)
S4 *Definitions-School bus signal lamps*	SAE J887, Jul 1964
S4 *Definitions-Sealed beam headlamp*	SAE J1383, Apr 1985, 2.1.1
S4 *Definitions-Sealed beam headlamp assembly*	SAE J580, Dec 1986, 2.1
S4 *Definitions-Seasoning*	SAE J1383, Apr 1985, 2.9
S4 *Definitions-Semiautomatic headlamp beam switching device*	SAE J565b, Feb 1969, 1
S4 *Definitions-Side marker lamps*	SAE J592e, Jul 1972, 2.2
S4 *Definitions-Stop lamps*	SAE J1398, May 1985, 2.1
S4 *Definitions-Stop lamps*	SAE J586, Feb 1984, 2.1

APPENDIX B: FMVSS 108 REWRITE CROSS REFERENCE

FMVSS 108 REWRITE CITATION	CURRENT FMVSS 108 OR INCORPORATED DOCUMENT CITATION
S4 *Definitions-Taillamps*	SAE J585e, Sep 1977, 2.1
S4 *Definitions-Test voltage*	SAE J1383, Apr 1985, 2.11
S4 *Definitions-Turn signal flasher*	SAE J590b, Oct 1965
S4 *Definitions-Turn signal lamps*	SAE J1395, Apr 1985, 2.1
S4 *Definitions-Turn signal lamps*	SAE J588, Nov 1984, 2.1
S4 *Definitions-Turn signal operating unit*	SAE J589, Apr 1964
S4 *Definitions-Upper beam*	SAE J1383, Apr 1985, 2.2
S4 *Definitions-Vehicular hazard warning signal flasher*	SAE J945, Feb 1966
S4 *Definitions-Vehicular hazard warning signal operating unit*	SAE J910, Jan 1966, 1
S5.1 *Recommended=mandatory*	S6.1
S5.1 *SAE Publications*	S5.2.1
S5.2 *Incorporated by reference*	New reference [49 CFR 571.5(j)]
S6.1 *Required lamps, reflective devices, and associated equipment by vehicle type*	Table I
S6.1 *Required lamps, reflective devices, and associated equipment by vehicle type*	Table II
S6.1 *Required lamps, reflective devices, and associated equipment by vehicle type*	Table III
S6.1 *Required lamps, reflective devices, and associated equipment by vehicle type*	Table IV
S6.1.1 *Quantity*	S5.1.1
S6.1.1 *Quantity*	S5.1.1.10
S6.1.1 *Quantity*	Table I
S6.1.1 *Quantity*	Table II
S6.1.1 *Quantity*	Table III
S6.1.1 *Quantity*	Table IV
S6.1.1.1 *Conspicuity systems*	S5.7
S6.1.1.1 *Conspicuity systems*	S5.7.1
S6.1.1.1.1 Conspicuity and reflex	S5.1.1.29
S6.1.1.2 *High mounted stop lamp*	S5.1.1.27(a)
S6.1.1.2 *High mounted stop lamp*	S5.1.1.27(b)
S6.1.1.2 *High mounted stop lamp*	S5.1.1.27(b)(1)
S6.1.1.2 *High mounted stop lamp*	S5.3.1.8(b)
S6.1.1.3 *Truck tractor rear turn signal lamps*	S5.1.1.1
S6.1.1.4 *Hazard warning lamps*	S5.5.5
S6.1.2 *Color*	S5.1.5
S6.1.2 *Color*	Table I
S6.1.2 *Color*	Table II
S6.1.2 *Color*	Table III
S6.1.2 Color	Table IV
S6.1.3 *Mounting location and height*	Interpretation-King 7/12/00
S6.1.3 *Mounting location and height*	S5.3
S6.1.3 *Mounting location and height*	Table II
S6.1.3 *Mounting location and height*	Table IV
S6.1.3.1 *Mounting height*	Table II heading
S6.1.3.1 *Mounting height*	Table IV heading
S6.1.3.2.1 *High mounted stop lamp mounting*	S5.3.1.8(a)(2)
S6.1.3.2.2 *High mounted stop lamp reflections*	S5.3.1.8(a)(3)
S6.1.4 *License plate lamp*	SAE J587, Oct 1981, 6.4
S6.1.5 *Activation*	S5.1.1.11
S6.1.5 *Activation*	S5.5.10(a)
S6.1.5 *Activation*	S5.5.10(b)
S6.1.5 *Activation*	S5.5.10(d)
S6.1.5 *Activation*	S5.5.3
S6.1.5 *Activation*	S5.5.7
S6.1.5.1 *Stop lamp activation*	S5.5.4
S6.1.5.1 *Stop lamp activation*	Interpretation-Farber 5/26/00
S6.2.1 *Impairment due to additional lamps or reflective devices*	S5.1.3
S6.2.1 *Impairment due to additional lamps or reflective devices*	S5.3.2(a)
S6.2.2 *Lamp or reflective device obstructed*	Interpretation-Alkire 11/28/89

APPENDIX B: FMVSS 108 REWRITE CROSS REFERENCE

FMVSS 108 REWRITE CITATION	CURRENT FMVSS 108 OR INCORPORATED DOCUMENT CITATION
S6.2.2 *Lamp or reflective device obstructed*	S5.3.2.2
S6.2.3 *Auxiliary lamp or reflective device requirements*	S5.5.10
S6.2.3 *Auxiliary lamp or reflective device requirements*	S5.5.7
S6.2.3 *Auxiliary lamp or reflective device requirements*	Table I
S6.2.3 *Auxiliary lamp or reflective device requirements*	Table II
S6.2.3 *Auxiliary lamp or reflective device requirements*	Table III
S6.2.3 *Auxiliary lamp or reflective device requirements*	Table IV
S6.2.4 *Daytime running lamps (DRL)*	S5.5.11(a)
S6.2.5 *Auxiliary identification lamps*	Interpretation-Clarke 7/28/05
S6.3 *Equipment combinations*	S5.4
S6.3.1 *High mounted stop lamp and cargo lamp*	S5.4(a)
S6.3.2 *Optically combined HSML and cargo lamp prohibitition*	S5.4(b)
S6.3.3. *Clearance lamp and taillamp*	S5.4(c)
S6.4.1 *Effective projected luminous lens area*	S5.1.1.22
S6.4.1 *Effective projected luminous lens area*	S5.1.1.25
S6.4.1 *Effective projected luminous lens area*	S5.1.1.26(a)
S6.4.1 *Effective projected luminous lens area*	S5.1.1.26(b)
S6.4.1 *Effective projected luminous lens area*	S5.1.1.27(a)(1)
S6.4.1 *Effective projected luminous lens area*	S5.1.1.27(b)(1)
S6.4.1 *Effective projected luminous lens area*	SAE J887, Jul 1964
S6.4.2 *Visibility*	S5.3.2(c)
S6.4.2 *Visibility*	S5.3.2(d)
S6.4.2 *Visibility*	S5.3.2(e)
S6.4.2 *Visibility*	SAE J887, Jul 1964
S6.4.3 *Visibility options*	S5.3.2(b)
S6.4.3(a) *Lens area option*	S5.3.2(b)(1)
S6.4.3(b) *Luminous intensity option*	S5.3.2(b)(2)
S6.4.4 *Alternative to S6.4.3*	S5.3.2.4
S6.4.5 *Low mounted lamps*	S5.3.2.3
S6.4.6 *School bus signal lamp aiming*	SAE J887, Jul 1964
S6.5.1 *DOT marking*	S7.2(a)
S6.5.1 *DOT marking*	S7.2(e)
S6.5.1.1 *DOT marking-conspicuity sheeting*	S5.7.1.5
S6.5.1.2 *DOT marking-except headlamps*	S5.8.10
S6.5.2 *DRL marking*	S5.5.11(a)(2)
S6.6 *Associated equipment*	S5.1.1
S6.6 *Associated equipment*	Table I
S6.6 *Associated equipment*	Table III
S6.6.1 *License plate holder*	SAE J587, Oct 1981, 6.1
S6.6.1 *License plate holder*	SAE J587, Oct 1981, 6.2
S6.7 *Replacement equipment*	S5.8.1
S6.7 *Replacement equipment*	S5.8.3
S6.7 *Replacement equipment*	S5.8.4
S6.7 *Replacement equipment*	S5.8.5
S6.7 *Replacement equipment*	S5.8.6
S6.7 *Replacement equipment*	S5.8.7
S6.7 *Replacement equipment*	S5.8.8
S6.7 *Replacement equipment*	S5.8.9
S6.8.1 *Physical tests*	SAE device documents referencing SAE J575
S6.8.2 *Samples for test*	SAE J1383, Apr 1985, 4.5.1
S6.8.2 *Samples for test*	SAE J575, Dec 1988, 2.1
S6.8.2 *Samples for test*	SAE J575, Dec 1988, 2.3
S6.8.2 *Samples for test*	SAE J575d, Aug 1967, B
S6.8.2 *Samples for test*	SAE J575e, Aug 1970, B
S6.8.2 *Samples for test*	SAE J594f, Jan 1977, 3.1.8
S6.8.3 *Laboratory facilities*	SAE J575, Dec 1988, 3
S6.8.3 *Laboratory facilities*	SAE J575d, Aug 1967, D
S6.8.3 *Laboratory facilities*	SAE J575e, Aug 1970, D

APPENDIX B: FMVSS 108 REWRITE CROSS REFERENCE

FMVSS 108 REWRITE CITATION	CURRENT FMVSS 108 OR INCORPORATED DOCUMENT CITATION
S6.8.4 *Plastic optical materials*	S5.1.2
S6.8.4.1 *UV tracer*	SAE J576, Jul 1991, 5
S6.8.5 *Photometric testing*	S5.7.1.2
S6.8.5 *Photometric testing*	S5.7.2.1(a)
S6.8.5 *Photometric testing*	S7.3.2(a)(3)
S6.8.5 *Photometric testing*	S7.3.3(a)
S6.8.5 *Photometric testing*	S7.3.4
S6.8.5 *Photometric testing*	S7.3.5(a)
S6.8.5 *Photometric testing*	S7.3.6(a),
S6.8.5 *Photometric testing*	S7.3.7(b)
S6.8.5 *Photometric testing*	S7.3.7(d)
S6.8.5 *Photometric testing*	S7.3.7(h)(1)
S6.8.5 *Photometric testing*	S7.3.8(b)
S6.8.5 *Photometric testing*	S7.3.9(a)
S6.8.5 *Photometric testing*	S7.4(a)(1)(i)
S6.8.5 *Photometric testing*	S7.4(a)(1)(ii)
S6.8.5 *Photometric testing*	S7.4(a)(1)(iii)
S6.8.5 *Photometric testing*	S7.4(a)(2)(i)
S6.8.5 *Photometric testing*	S7.4(a)(2)(ii)
S6.8.5 *Photometric testing*	S7.4(a)(3)
S6.8.5 *Photometric testing*	S7.5(b)
S6.8.5 *Photometric testing*	S7.5(d)(2)
S6.8.5 *Photometric testing*	S7.5(e)(2)
S6.8.5 *Photometric testing*	S7.6.2
S6.8.5 *Photometric testing*	S7.6.3
S6.8.5 *Photometric testing*	S7.9.2
S6.8.5 *Photometric testing*	SAE device documents referencing SAE J575
S6.8.5.1 *Photometry ex headlamp, license lamp, & DRL*	SAE device documents for photometry distance
S6.8.5.1 *Photometry ex headlamp, license lamp, & DRL*	SAE J186a, Sep 1977, 3.10
S6.8.5.1 *Photometry ex headlamp, license lamp, & DRL*	SAE J575d, Aug 1967, J
S6.8.5.1 *Photometry ex headlamp, license lamp, & DRL*	SAE J575e, Aug 1970, J
S6.8.5.1 *Photometry ex headlamp, license lamp, & DRL*	SAE J887, Jul 1964
S6.8.5.1.1 *Location of test points*	SAE J575d, Aug 1967, J
S6.8.5.1.1 *Location of test points*	SAE J575e, Aug 1970, J
S6.8.5.1.2 *Multiple comp & lamp photometry*	SAE J1395, Apr 1985, 4.1.5.2
S6.8.5.1.2 *Multiple comp & lamp photometry*	SAE J1398, May 1985, 4.1.5.2
S6.8.5.1.2 *Multiple comp & lamp photometry*	SAE J585e, Sep 1977, 3.6.2
S6.8.5.1.2 *Multiple comp & lamp photometry*	SAE J586, Feb 1984, 4.1.5.2
S6.8.5.1.2 *Multiple comp & lamp photometry*	SAE J588, Nov 1984, 4.1.5.2
S6.8.5.1.2.1 *Photometry of all compartments/lamps together*	SAE J585e, Sep 1977, 3.6.2(a)
S6.8.5.1.2.1 *Photometry of all compartments/lamps together*	SAE J586, Feb 1984, 4.1.5.2.1
S6.8.5.1.2.1 *Photometry of all compartments/lamps together*	SAE J588, Nov 1984, 4.1.5.2.1
S6.8.5.1.2.2 *Photometry of individual compartments/lamps*	SAE J1395, Apr 1985, 4.1.5.2
S6.8.5.1.2.2 *Photometry of individual compartments/lamps*	SAE J1398, May 1985, 4.1.5.2
S6.8.5.1.2.2 *Photometry of individual compartments/lamps*	SAE J585e, Sep 1977, 3.6.2(b)
S6.8.5.1.2.2 *Photometry of individual compartments/lamps*	SAE J586, Feb 1984, 4.1.5.2.2
S6.8.5.1.2.2 *Photometry of individual compartments/lamps*	SAE J588, Nov 1984, 4.1.5.2.2
S6.8.5.1.2.3 *Multiple compartment/lamp photometry for wide vehicles*	SAE J1395, Apr 1985, 4.1.5.2
S6.8.5.1.2.3 *Multiple compartment/lamp photometry for wide vehicles*	SAE J1398, May 1985, 4.1.5.2
S6.8.5.2 *Bulbs*	S5.1.1.17
S6.8.5.2.1 *Bulbs without MSCD*	S5.1.1.16
S6.8.5.3 *License plate lamp photometry*	SAE J587, Oct 1981, 6.3
S6.8.5.3.1 *Illumination surface*	SAE J587, Oct 1981, 6.7
S6.8.5.3.2 *Test stations*	SAE J587, Oct 1981, 6.8
S6.8.5.4 *Reflex reflector photometry*	SAE J594f, Jan 1977, 3.1.7
S6.8.5.4.1 *Reflex reflector and retroreflective sheeting photometry measurements*	S5.7.1.2
S6.8.5.4.1 *Reflex reflector and retroreflective sheeting photometry measurements*	S5.7.2
S6.8.5.4.1 *Reflex reflector and retroreflective sheeting photometry measurements*	SAE J594f, Jan 1977, 3.1.7

APPENDIX B: FMVSS 108 REWRITE CROSS REFERENCE

FMVSS 108 REWRITE CITATION	CURRENT FMVSS 108 OR INCORPORATED DOCUMENT CITATION
S6.8.5.4.1.1 *Reflex reflector photometry measurements adjustments*	SAE J594f, Jan 1977, 3.1.7
S6.8.5.5 *Daytime running lamp (DRL) photometry measurements*	S11
S6.8.5.6 *Headlamp photometry measurements*	S10(a)
S6.8.5.6 *Headlamp photometry measurements*	S10(b)
S6.8.5.6 *Headlamp photometry measurements*	S7.4(e)
S6.8.5.6 *Headlamp photometry measurements*	S7.5(c)
S6.8.5.6 *Headlamp photometry measurements*	S7.8.5.2(d)(1)
S6.8.5.6 *Headlamp photometry measurements*	SAE J1383, Apr 1985, 4.1.4.2
S6.8.5.6 *Headlamp photometry measurements*	SAE J575, Dec 1988, 4.6.3
S6.8.5.6.1 *Seasoning and test voltage*	SAE J1383, Apr 1985, 4.1.4.1
S6.8.5.6.1 *Seasoning and test voltage*	SAE J1383, Apr 1985, 4.1.4.3
S6.8.5.6.1 *Seasoning and test voltage*	SAE J575, Dec 1988, 4.6.3.4
S6.8.5.6.2 *Aiming*	S7.2(d)
S6.8.5.6.2 *Aiming*	S7.3.7(b)
S6.8.5.6.2 *Aiming*	S7.8.5.2(d)(1)
S6.8.5.6.2 *Aiming*	S7.8.5.3(e)(2)
S6.8.5.6.2(a) *Aiming-mechanical*	SAE J1383, Apr 1985, 4.1.4.3
S6.8.5.6.2(b) *Aiming-VHAD*	S7.8.5.2(d)(1)
S6.8.5.6.2(c) *Aiming-LB VOL/VOR vertical*	S7.8.5.3(e)(2)
S6.8.5.6.2(c) *Aiming-LB VOL/VOR vertical*	S7.8.5.3(a)(1)
S6.8.5.6.2(d) *Aiming-LB VOL/VOR horizontal*	S7.8.5.3(b)
S6.8.5.6.2(e) *Aiming-UB VOL/VOR vertical*	S7.8.5.3(e)(2)
S6.8.5.6.2(e) *Aiming-UB VOL/VOR vertical*	S7.8.5.3(c)(1)
S6.8.5.6.2(e) *Aiming-UB VOL/VOR vertical*	S7.8.5.3(c)(2)
S6.8.5.6.2(f) *Aiming-UB VOL/VOR horizontal*	S7.8.5.3(d)(1)
S6.8.5.6.2(f) *Aiming-UB VOL/VOR horizontal*	S7.8.5.3(d)(2)
S6.8.5.6.2(f) *Aiming-UB VOL/VOR horizontal*	S7.8.5.3(d)(3)
S6.8.5.6.2(g) *Aiming-Simultaneous aim*	S10(a)
S6.8.5.6.2(g) *Aiming-Simultaneous aim*	S10(b)
S6.8.5.6.2(h) *Aiming-Moveable reflector*	S7.8.2.2
S6.8.5.6.2(h) *Aiming-Moveable reflector*	S7.8.3
S6.8.5.6.2(h) *Aiming-Moveable reflector*	S7.8.4
S6.8.5.6.2(i) *Aiming-Motorcycle UB*	S7.9.3
S6.8.5.6.2(i) *Aiming-Motorcycle UB*	SAE J584, Oct 1993
S6.8.5.6.2(j) *Aiming-Motorcycle LB*	SAE J584, Apr 1964
S6.8.5.6.3 *Positioner*	SAE J575, Dec 1988, 4.6.2.1
S6.8.5.6.4 *Photometer*	SAE J575, Dec 1988, 4.6.2.2
S6.8.5.6.4 *Photometer*	SAE J575, Dec 1988, 4.6.2.3
S6.8.5.6.4 *Photometer*	SAE J575, Dec 1988, 4.6.2.3.1
S6.8.5.6.5 *Location of test points*	S7.2(d)
S6.8.5.6.5 *Location of test points*	SAE J575, Dec 1988, 4.6.3.3
S6.8.5.6.6 *Beam contributor photometry*	S7.4(a)(3)
S7.1.1.1 *Front turn signal lamp photometry*	S5.1.1.7
S7.1.1.1 *Front turn signal lamp photometry*	SAE J1395, Apr 1985, Table 1
S7.1.1.1 *Front turn signal lamp photometry*	SAE J588, Nov 1984, Table 1
S7.1.1.2 *Spacing to other lamps*	SAE J1395, Apr 1985, 5.1.5.4
S7.1.1.2 *Spacing to other lamps*	SAE J588, Nov 1984, 5.1.5.4
S7.1.1.2.1 *Spacing measurement for non reflector lamps*	SAE J1395, Apr 1985, 5.1.5.5
S7.1.1.2.1 *Spacing measurement for non reflector lamps*	SAE J588, Nov 1984, 5.1.5.4.1
S7.1.1.2.2 *Spacing measurement for lamps with reflectors*	SAE J1395, Apr 1985, 5.1.5.6
S7.1.1.2.2 *Spacing measurement for lamps with reflectors*	SAE J588, Nov 1984, 5.1.5.4.2
S7.1.1.2.3 *Spacing based photometric multipliers*	S5.3.1.7
S7.1.1.2.3 *Spacing based photometric multipliers*	SAE J1395, Apr 1985, Table 2
S7.1.1.2.3 *Spacing based photometric multipliers*	SAE J588, Nov 1984, Table 2
S7.1.1.3 *Multiple compartments and multiple lamps*	SAE J588, Nov 1984 5.1.5.2
S7.1.1.3.1 *Lamps installed on vehicles 2032 mm or more in overall width*	S5.1.1.12
S7.1.1.3.2 *Ratio to parking lamps*	SAE J588, Nov 1984, 5.1.5.3

APPENDIX B: FMVSS 108 REWRITE CROSS REFERENCE

FMVSS 108 REWRITE CITATION	CURRENT FMVSS 108 OR INCORPORATED DOCUMENT CITATION
S7.1.1.3.2 *Ratio to parking lamps and clearance lamps*	SAE J1395, Apr 1985, 5.1.5.2
S7.1.2.1 *Rear turn signal lamp photometry*	S5.1.1.7
S7.1.2.1 *Rear turn signal lamp photometry*	SAE J1395, Apr 1985, Table 1
S7.1.2.1 *Rear turn signal lamp photometry*	SAE J588, Nov 1984, Table 1
S7.1.2.2 *Multiple compartments and multiple lamps*	SAE J588, Nov 1984, 5.1.5.2
S7.1.2.2.1 *Lamps installed on vehicles 2032 mm or more in overall width*	S5.1.1.12
S7.1.2.3 *Ratio to taillamps*	SAE J588, Nov 1984, 5.1.5.3
S7.1.2.3 *Ratio to taillamps and clearance lamps*	SAE J1395, Apr 1985, 5.1.5.2
S7.1.3 *Turn signal lamp physical tests*	S5.1.2
S7.1.3 *Turn signal lamp physical tests*	S5.1.2
S7.1.3 *Turn signal lamp physical tests*	S5.1.5
S7.1.3 *Turn signal lamp physical tests*	S6.2
S7.1.3 *Turn signal lamp physical tests*	S6.2
S7.1.3 *Turn signal lamp physical tests*	SAE J1395, Apr 1985, 4
S7.1.3 *Turn signal lamp physical tests*	SAE J588, Nov 1984, 4
S7.1.4 *Combined lamp bulb indexing*	SAE J1395, Apr 1985, 5.3.1
S7.1.4 *Combined lamp bulb indexing*	SAE J588, Nov 1984, 5.3.1
S7.2.1 *Taillamp photometry*	Figure 1a
S7.2.1 *Taillamp photometry*	Figure 1b
S7.2.1 *Taillamp photometry*	Figure 1c
S7.2.1 *Taillamp photometry*	S5.1.1.6
S7.2.1.1 *Multiple compartments and multiple lamps*	SAE J585e, Sep 1977, 3.1
S7.2.1.1.1 *Lamps installed on vehicles 2032 mm or more in overall width*	SAE J585e, Sep 1977, 3.1
S7.2.2 *Taillamp physical tests*	S5.1.2
S7.2.2 *Taillamp physical tests*	S5.1.5
S7.2.2 *Taillamp physical tests*	S6.2
S7.2.2 *Taillamp physical tests*	SAE J585e, Sep 1977, 3
S7.3.1 *Stop lamp photometry*	S5.1.1.22
S7.3.1 *Stop lamp photometry*	SAE J1398, May 1985, Table 1
S7.3.1 *Stop lamp photometry*	SAE J586, Feb 1984, Table 1
S7.3.1.1 *Multiple compartments and multiple lamps*	SAE J586, Feb 1984, 5.1.5.2
S7.3.1.1.1 *Lamps installed on vehicles 2032 mm or more in overall width*	S5.1.1.12
S7.3.1.2 *Ratio to taillamps*	SAE J1398, May 1985, 5.1.5.2
S7.3.1.2 *Ratio to taillamps*	SAE J586, Feb 1984, 5.1.5.3
S7.3.2 *Stop lamp physical tests*	S5.1.2
S7.3.2 *Stop lamp physical tests*	S5.1.5
S7.3.2 *Stop lamp physical tests*	S6.2
S7.3.2 *Stop lamp physical tests*	SAE J1398, May 1985, 5
S7.3.2 *Stop lamp physical tests*	SAE J586, Feb 1984, 5
S7.3.3 *Combined lamp bulb indexing*	SAE J586, Feb 1984, 5.3.1
S7.4.1 *Inboard photometry*	S5.1.1.8
S7.4.1 *Side marker lamp photometry*	SAE J592e, Jul 1972, Table 1
S7.4.1.1 *Side marker lamp inboard photometry*	S5.1.1.3
S7.4.1.1 *Side marker lamp inboard photometry*	SAE J592e, Jul 1972, Table 1, Footnote b
S7.4.2 *Side marker lamp physical tests*	S5.1.2
S7.4.2 *Side marker lamp physical tests*	S5.1.5
S7.4.2 *Side marker lamp physical tests*	S6.2
S7.4.2 *Side marker lamp physical tests*	SAE J592e, Jul 1972, 3
S7.5.1 *Clearance and identification lamp photometry*	SAE J592e, Jul 1972, Table 1
S7.5.2 *Clearance and identification lamp physical tests*	S5.1.2
S7.5.2 *Clearance and identification lamp physical tests*	S5.1.5
S7.5.2 *Clearance and identification lamp physical tests*	S6.2
S7.5.2 *Clearance and identification lamp physical tests*	SAE J592e, Jul 1972, 3
S7.6.1 *Backup lamp photometry*	Figure 2
S7.6.2 *Color*	SAE J593c, Feb 1968
S7.6.3 *Backup lamp physical tests*	S5.1.2
S7.6.3 *Backup lamp physical tests*	S5.1.5
S7.6.3 *Backup lamp physical tests*	S6.2

APPENDIX B: FMVSS 108 REWRITE CROSS REFERENCE

FMVSS 108 REWRITE CITATION	CURRENT FMVSS 108 OR INCORPORATED DOCUMENT CITATION
S7.6.3 *Backup lamp physical tests*	SAE J593c, Feb 1968
S7.7.1 *License plate lamp installation*	SAE J587, Oct 1981, 6.3
S7.7.1.1 *Incident light from a single lamp*	SAE J587, Oct 1981, 6.5
S7.7.1.2 *Incident light from multiple lamps*	SAE J587, Oct 1981, 6.6
S7.7.2 *License plate lamp photometry*	SAE J587, Oct 1981, 7
S7.7.3 *License plate lamp physical tests*	S5.1.2
S7.7.3 *License plate lamp physical tests*	S5.1.5
S7.7.3 *License plate lamp physical tests*	S6.2
S7.7.3 *License plate lamp physical tests*	SAE J587, Oct 1981, 3
S7.7.3 *License plate lamp physical tests*	SAE J587, Oct 1981, 4
S7.7.3 *License plate lamp physical tests*	SAE J587, Oct 1981, 5
S7.8.1 *Parking lamp photometry*	Figure 1a
S7.8.1 *Parking lamp photometry*	Figure 1b
S7.8.1 *Parking lamp photometry*	Figure 1c
S7.8.1 *Parking lamp photometry*	S5.1.1.6
S7.8.2 *Parking lamp physical tests*	S5.1.2
S7.8.2 *Parking lamp physical tests*	S5.1.5
S7.8.2 *Parking lamp physical tests*	S6.2
S7.8.2 *Parking lamp physical tests*	SAE J222, Dec 1970, 3
S7.9.1 *High mounted stop lamp accessibility*	S5.1.1.27(a)(5)
S7.9.1 *High mounted stop lamp accessibility*	S5.1.1.27(b)(4)
S7.9.2 *Interior mounting*	S5.3.1.8(a)(3)
S7.9.2 *High mounted stop lamp photometry*	Figure 10
S7.9.2 *High mounted stop lamp photometry*	S5.1.1.27(a)(3)
S7.9.2 *High mounted stop lamp photometry*	S5.1.1.27(b)(3)
S7.9.3 *High mounted stop lamp physical tests*	S5.1.1.27(a)(4)
S7.9.3 *High mounted stop lamp physical tests*	S5.1.2
S7.9.3 *High mounted stop lamp physical tests*	S6.2
S7.9.3 *High mounted stop lamp physical tests*	SAE J186a, Sep 1977, 3
S7.9.3 *High mounted stop lamp physical tests*	S5.1.5
S7.10.1 *Reflex reflector photometry*	SAE J594f, Jan 1977, Table 1
S7.10.1 *Reflex reflector photometry*	SAE J594f, Jan 1977, Table 1A
S7.10.1.1 *Alternative side reflex reflectors*	S5.1.1.29
S7.10.1.1 *Alternative side reflex reflectors*	S5.1.1.4
S7.10.2 *Reflex reflector physical tests*	S5.1.2
S7.10.2 *Reflex reflector physical tests*	S5.1.5
S7.10.2 *Reflex reflector physical tests*	S6.2
S7.10.2 *Reflex reflector physical tests*	SAE J594f, Jan 1977, 3
S7.11.1 *Daytime running lamp (DRL) photometry*	S5.5.11(a)(1)
S7.11.1 *Daytime running lamp (DRL) photometry*	S5.5.11(a)(4)
S7.11.2 *Spacing to turn signal lamps*	S5.5.11(a)(4)
S7.11.2.1 *Optically combined with turn signal lamp*	S5.5.11(a)(5)
S7.11.2.2 *Not optically combined with turn signal lamp*	S5.5.11(a)(4)
S7.11.3 *Daytime running lamp (DRL) physical tests*	S5.1.2
S7.11.3 *Daytime running lamp (DRL) physical tests*	S5.1.5
S7.11.3 *Daytime running lamp (DRL) physical tests*	S5.5.11(a)(3)
S7.12 *Conspicuity systems*	S5.7
S7.12.1 *Retroreflective sheeting*	S5.7.1.1
S7.12.1 *Retroreflective sheeting*	S5.7.1.2
S7.12.1 *Retroreflective sheeting*	S5.7.1.3(d)
S7.12.1 *Retroreflective sheeting*	S5.7.3
S7.12.1.1 *Certification marking*	S5.7.1.5
S7.12.1.2 *Retroreflective sheeting photometry*	Figure 29
S7.12.1.2 *Retroreflective sheeting photometry*	S5.7.1.2
S7.12.2 *Conspicuity reflex reflectors*	S5.7.2
S7.12.2.1 *Certification marking*	S5.7.2.3
S7.12.2.2 *Conspicuity reflex reflector photometry*	S5.7.2.1
S7.13.1 *School bus signal lamp photometry*	S5.1.4(b)

APPENDIX B: FMVSS 108 REWRITE CROSS REFERENCE

FMVSS 108 REWRITE CITATION	CURRENT FMVSS 108 OR INCORPORATED DOCUMENT CITATION
S7.13.1 *School bus signal lamp photometry*	SAE J887, Jul 1964, Table 1
S7.13.2 *School bus signal lamp physical tests*	S5.1.2
S7.13.2 *School bus signal lamp physical tests*	S5.1.5
S7.13.2 *School bus signal lamp physical tests*	S6.2
S7.13.2 *School bus signal lamp physical tests*	SAE J887, Jul 1964
S7.14 *Associated equipment*	Table I
S7.14 *Associated equipment*	Table III
S7.14.1 *Turn signal operating unit*	S5.1.1.5
S7.14.1 *Turn signal operating unit*	SAE J589, Apr 1964
S7.14.2 *Turn signal flasher*	SAE J590b, Oct 1965
S7.14.3 *Turn signal pilot indicator*	S5.5.6
S7.14.3 *Turn signal pilot indicator*	SAE J588e, Sep 1970
S7.14.3.1 *Indicator size and color*	SAE J588e, Sep 1970
S7.14.3.2 *Turn signal lamp failure*	S5.5.6
S7.14.4 *Headlamp beam switching device*	S5.5.1
S7.14.4 *Headlamp beam switching device*	SAE J564a, Apr 1964
S7.14.4.1 *Semi-automatic headlamp beam switching device*	S5.5.1
S7.14.4.1 *Semi-automatic headlamp beam switching device*	SAE J565b, Feb 1969
S7.14.4.1.1 *Operating instructions*	SAE J565b, Feb 1969, 2
S7.14.4.1.2 *Manual override*	SAE J565b, Feb 1969, 4.4
S7.14.4.1.3 *Fail safe operation*	SAE J565b, Feb 1969, 4.6
S7.14.4.1.4 *Automatic dimming indicator*	SAE J565b, Feb 1969, 4.13
S7.14.4.1.5 *Lens accessibility*	SAE J565b, Feb 1969, 4.16
S7.14.4.1.6 *Mounting height*	SAE J565b, Feb 1969, 4.17
S7.14.5 *Upper beam headlamp indicator*	S5.5.2
S7.14.5.1 *Indicator size and location*	S5.5.2
S7.14.5.1 *Indicator size and location*	SAE J564a, Apr 1964
S7.14.6 *Vehicular hazard warning signal operating unit*	SAE J910, Jan 1966, 1
S7.14.6 *Vehicular hazard warning signal operating unit*	SAE J910, Jan 1966, 3(a)
S7.14.6 *Vehicular hazard warning signal operating unit*	SAE J910, Jan 1966, 3(b)
S7.14.6 *Vehicular hazard warning signal operating unit*	SAE J910, Jan 1966, 3(d)
S7.14.6.1 *Operating unit switch*	S5.5.5
S7.14.6.1 *Operating unit switch*	SAE J910, Jan 1966, 3(c)
S7.14.6.1 *Operating unit switch*	SAE J910, Jan 1966, 3(e)
S7.14.7 *Vehicular hazard warning signal flasher*	SAE J945, Feb 1966
S7.14.8 *Vehicular hazard warning signal pilot indicator*	SAE J910, Jan 1966, 5
S7.14.8 *Vehicular hazard warning signal pilot indicator*	SAE J945, Feb 1966
S7.14.8.1 *Indicator size and color*	SAE J910, Jan 1966, 5
S8.1 *Headlighting systems*	S7.1
S8.1 *Headlighting systems*	S7.9.2(b)
S8.1.1 *Headlighting system type*	S7.3
S8.1.1 *Headlighting system type*	S7.4
S8.1.1 *Headlighting system type*	S7.5
S8.1.1 *Headlighting system type*	S7.6
S8.1.2 *Headlamp category*	S7.3
S8.1.2 *Headlamp category*	S7.4
S8.1.2 *Headlamp category*	S7.5
S8.1.2 *Headlamp category*	S7.6
S8.1.3 *Vertical headlamp arrangement*	S7.4(b)
S8.1.3 *Vertical headlamp arrangement*	S7.5(d)
S8.1.4 *Horizontal headlamp arrangement*	S7.4(b)
S8.1.4 *Horizontal headlamp arrangement*	S7.5(d)
S8.1.5 *Headlamp adjustments*	SAE J566, Jan 1960, 1
S8.1.5 *Headlamp adjustments*	SAE J566, Jan 1960, 2
S8.1.5 *Headlamp adjustments*	SAE J566, Jan 1960, 3
S8.2 *Simultaneous beam activation*	S5.5.8
S8.2 *Simultaneous beam activation*	S7.4(a)(1)(ii)

APPENDIX B: FMVSS 108 REWRITE CROSS REFERENCE

FMVSS 108 REWRITE CITATION	CURRENT FMVSS 108 OR INCORPORATED DOCUMENT CITATION
S9 *Sealed beam headlamps*	S7.3
S9.1 *Sealed beam headlamp installation*	S7.3.2
S9.1 *Sealed beam headlamp installation*	S7.3.3
S9.1 *Sealed beam headlamp installation*	S7.3.4
S9.1 *Sealed beam headlamp installation*	S7.3.5
S9.1 *Sealed beam headlamp installation*	S7.3.6
S9.1 *Sealed beam headlamp installation*	S7.3.7
S9.1 *Sealed beam headlamp installation*	S7.3.8
S9.1 *Sealed beam headlamp installation*	S7.3.9
S9.2 *Type F sealed beam headlamp simultaneous aim*	S7.3.7(h)
S9.2 *Type F sealed beam headlamp simultaneous aim*	S7.3.7(h)(1)
S9.2 *Type F sealed beam headlamp simultaneous aim*	S7.3.7(h)(2)
S9.3 *Sealed beam headlamp photometry*	S7.3.2(a)(3)
S9.3 *Sealed beam headlamp photometry*	S7.3.3(a)
S9.3 *Sealed beam headlamp photometry*	S7.3.4
S9.3 *Sealed beam headlamp photometry*	S7.3.5(a)
S9.3 *Sealed beam headlamp photometry*	S7.3.6(a)
S9.3 *Sealed beam headlamp photometry*	S7.3.7(b)
S9.3 *Sealed beam headlamp photometry*	S7.3.8(b)
S9.3 *Sealed beam headlamp photometry*	S7.3.9(a)
S9.3 *Sealed beam headlamp photometry*	S7.3.2(c)
S9.3 *Sealed beam headlamp photometry*	S7.3.2(d)
S9.3 *Sealed beam headlamp photometry*	S7.3.3(b)
S9.3 *Sealed beam headlamp photometry*	S7.3.5(b)
S9.3 *Sealed beam headlamp photometry*	S7.3.6(b)
S9.3 *Sealed beam headlamp photometry*	S7.3.7(g)
S9.3 *Sealed beam headlamp photometry*	S7.3.7(i)
S9.3 *Sealed beam headlamp photometry*	S7.3.8(d)
S9.3 *Sealed beam headlamp photometry*	S7.3.8(e)
S9.3 *Sealed beam headlamp photometry*	S7.3.9(b)
S9.3 *Sealed beam headlamp photometry*	SAE J1383, Apr 1985, 4.2
S9.3 *Sealed beam headlamp photometry*	SAE J1383, Apr 1985, 4.3
S9.3 *Sealed beam headlamp photometry*	SAE J580, Dec 1986, 4.1.2
S9.3 *Sealed beam headlamp photometry*	SAE J580, Dec 1986, 4.2
S9.3 *Sealed beam headlamp photometry*	SAE J580, Dec 1986, 4.3
S9.3 *Sealed beam headlamp photometry*	SAE J580, Dec 1986, 4.4
S9.3 *Sealed beam headlamp photometry*	SAE J580, Dec 1986, 4.5
S10.1 *Integral beam headlamp installation*	S7.4
S10.1 *Integral beam headlamp installation*	S7.4(a)
S10.2 *Integral beam headlamp aimability*	S7.4(f)
S10.3 *Integral beam headlamp simultaneous aim*	S7.4(d)
S10.4 *Markings*	S7.4(c)(1)
S10.4 *Markings*	S7.4(c)(2)
S10.5 *Additional light sources*	S7.4(i)
S10.6 *Integral beam headlamp photometry*	S7.4(a)
S10.6 *Integral beam headlamp photometry*	S7.4(g)
S10.6 *Integral beam headlamp photometry*	S7.4(h)
S11.1 *Replaceable bulb headlamp installation*	S7.5(a)
S11.2 *Replaceable bulb headlamp aiming restrictions*	S7.5(d)(1)
S11.2 *Replaceable bulb headlamp aiming restrictions*	S7.5(e)(1)
S11.2 *Replaceable bulb headlamp aiming restrictions*	S7.5(h)
S11.3 *Additional light sources*	S7.5(j)
S11.4 *Replacement equipment*	S7.5(f)
S11.5 *Markings*	S7.5(d)(3)(i)(B)
S11.5 *Markings*	S7.5(d)(3)(ii)(B)

APPENDIX B: FMVSS 108 REWRITE CROSS REFERENCE

FMVSS 108 REWRITE CITATION	CURRENT FMVSS 108 OR INCORPORATED DOCUMENT CITATION
S11.5 *Markings*	S7.5(e)(3)(i)
S11.5 *Markings*	S7.5(e)(3)(ii)
S11.6 *Replaceable bulb headlamp photometry*	S7.5(b)
S11.7 *Replaceable bulb headlamp physical tests*	S7.5(i)
S12 *Combination headlamps*	S7.6
S12.1 *Combination headlamp installation*	S7.6.1
S12.2 *Combination headlamp photometry*	S7.6.2
S12.2 *Combination headlamp photometry*	S7.6.2.1
S12.2 *Combination headlamp photometry*	S7.6.2.2
S12.2 *Combination headlamp photometry*	S7.6.3
S12.3 *Combination headlamp physical tests*	S7.4(g)
S13 *Motorcycle headlamps*	S7.9.2
S13.1 *Motorcycly headlamp installation*	S7.9.6.1
S13.1.1 *Single headlamp*	S7.9.6.2(a)
S13.1.2 *Two headlamps with both beams*	S7.9.6.2(b)
S13.1.3 *Two headlamps, upper beam and lower beam*	S7.9.6.2(c)
S13.2 *Motorcycle headlamp photometry*	S7.9.2(a)
S13.3 *Motorcycle headlamp physical tests*	SAE J584, Apr 1964
S13.4 *Motorcycle replaceable bulb headlamp marking*	S7.9.5
S13.5 *Motorcycle headlamp modulation system*	S7.9.4.1
S13.5.1(a) *Rate*	S7.9.4.1(a)
S13.5.1(b) *Maximum power*	S7.9.4.1(b)
S13.5.1(c) *Minimum intensity*	S7.9.4.1(c)
S13.5.1(d) *Wiring*	S7.9.4.1(d)
S13.5.1(e) *Failure mode*	S7.9.4.1(e)
S13.5.1(f) *Sensor*	S7.9.4.1(f)
S13.5.1(g) *Voltage drop*	S7.9.4.1(g)
S13.5.1(h) *Full voltage operation*	S7.9.4.1(h)
S13.5.2 *Replacement modulators*	S7.9.4.2(a)
S13.5.2.1 *Replacement performance*	S7.9.4.2(a)
S13.5.2.2 *Replacement instructions*	S7.9.4.2(b)
S14.1 *Headlamp mounting and aiming*	S7.8.2
S14.2 *Headlamp obstructions*	S7.8.5
S14.3 *Headlamp aiming systems*	S7.8.5
S14.4 *Aim adjustment interaction*	S7.8.2.1(a)
S14.4 *Aim adjustment interaction*	S7.8.2.1(b)
S14.4.1 Excess aim interaction	S7.8.5.2(b)(3)
S14.5 *Horizontal adjustment-visually aimed headlamp*	S7.8.2.1(c)
S14.6.1 *Optical axis marking-vehicle*	S7.8.1(b)
S14.6.2 *Optical axis marking-headlamp*	S7.8.1(a)
S14.6.3 *Optical axis marking-visual aim headlamp*	S7.8.1(c)
S14.6.3 *Optical axis marking-visual aim headlamp*	S7.8.5.3(f)(1)
S14.7 *Moveable reflectors*	S7.8.2.2(a)
S14.7 *Moveable reflectors*	S7.8.2.2(b)
S14.8 *External aiming*	S7.8.5.1
S14.8.1 *Headlamp aiming device locating plates*	S7.8.5.1(d)
S14.8.1.1 *Aiming pads*	S7.8.5.1(d)(1)
S14.8.1.2 *Aiming dimension marking*	S7.8.5.1(d)(2)
S14.8.2 *Nonadjustable headlamp aiming device locating plates*	S7.8.5.1(e)
S14.9 *On-vehicle aiming*	S7.8.5.2
S14.9.1 *Aim*	S7.8.5.2(a)
S14.9.1.1 *Vertical aim*	S7.8.5.2(a)(1)
S14.9.1.1.1 *Graduations*	S7.8.5.2(a)(1)(i)
S14.9.1.1.2 *VHAD markings*	S7.8.5.2(a)(1)(ii)

APPENDIX B: FMVSS 108 REWRITE CROSS REFERENCE

FMVSS 108 REWRITE CITATION	CURRENT FMVSS 108 OR INCORPORATED DOCUMENT CITATION
S14.9.1.1.3 *Graduation scale*	S7.8.5.2(a)(1)(iii)
S14.9.1.1.4 *Vertical indicator range*	S7.8.5.2(a)(1)(iv)
S14.9.1.1.5 *Floor slope compensation*	S7.8.5.2(a)(1)(v)
S14.9.1.1.6 *Graduation legibility*	S7.8.5.2(a)(1)(vi)
S14.9.1.2 *Horizontal aim*	S7.8.5.2(a)(2)
S14.9.1.2.1 *Graduation scale*	S7.8.5.2(a)(2)(i)
S14.9.1.2.2 *Horizontal markings*	S7.8.5.2(a)(2)(ii)
S14.9.1.2.3 *Graduation legibility*	S7.8.5.2(a)(2)(iii)
S14.9.1.2.4 *Horizontal indicator range*	S7.8.5.2(a)(2)(iv)
S14.9.2.1 *Aiming instruction location and content*	S7.8.5.2(b)(1)
S14.9.2.2 *Remote indicator instructions*	S7.8.5.2(b)(2)
S14.9.3 *VHAD permanent calibration*	S7.8.5.2(c)
S14.9.4 *Replacement units*	S7.8.5.2(d)(2)
S14.9.5 *VHAD physical tests*	S7.8.5.2(d)
S14.10 *Visual/optical aiming*	S7.8.5.3
S14.10.1 *Vertical aim, lower beam*	S7.8.5.3(a)
S14.10.1.1 *Vertical position of the cutoff*	S7.8.5.3(a)(1)
S14.10.1.2 *Vertical gradient*	S7.8.5.3(a)(2)
S14.10.1.3 *Horizontal position of the cutoff*	S7.8.5.3(a)(3)
S14.10.1.4 *Maximum inclination of the cutoff*	S7.8.5.3(a)(4)
S14.10.1.5 *Measuring the cutoff parameter*	Interpretation-Spingler 4/6/2000
S14.10.1.5 *Measuring the cutoff parameter*	S7.8.5.3(a)(5)(i)
S14.10.1.5.1 *Test position*	S7.8.5.3(a)(5)(i)
S14.10.1.5.2 *Headlamp aiming*	S7.8.5.3(a)(5)(ii)
S14.10.1.5.3 *Beam scanning*	S7.8.5.3(a)(5)(iii)
S14.10.1.5.4 *Gradient calculation*	S7.8.5.3(a)(5)(iv)
S14.10.2 *Horizontal aim, lower beam*	S7.8.5.3(b)
S14.10.3 *Vertical aim, upper beam*	
S14.10.3.1 *Combined upper and lower beams*	S7.8.5.3(c)(1)
S14.10.3.2 *Upper beam without lower beam*	S7.8.5.3(c)(2)
S14.10.4 *Horizontal aim, upper beam*	
S14.10.4.1 *Combined upper and lower beams*	S7.8.5.3(d)(1)
S14.10.4.2 *Upper beam without lower beam*	S7.8.5.3(d)(2)
S14.10.4.3 *Upper beam without lower beam of VHAD*	S7.8.5.3(d)(3)
S14.10.5 *Photometric measurements*	S7.8.5.3(e)(1)
S14.10.6 *Visual/optical identification marking*	S7.8.5.3(f)(2)(v)
S14.10.6.1 *VOL/VOR/VO markings*	S7.8.5.3(f)(2)(i)
S14.10.6.1 *VOL/VOR/VO markings*	S7.8.5.3(f)(2)(ii)
S14.10.6.1 *VOL/VOR/VO markings*	S7.8.5.3(f)(2)(iv)
S14.10.6.2 *VOR/VO markings on sealed beams*	S7.8.5.3(f)(2)(iii)
S15 *Replaceable light sources*	S7.7
S15.1 *Markings*	S7.7(a)
S15.2 *Power and flux measurement*	S7.7(b)
S15.3 *Power and flux measurement*	S7.7(d)
S15.3.1 *Testing-resistive filament light sources*	S7.7(d)(1)
S15.3.2 *Testing-discharge light sources*	S7.7(d)(2)
S15.4 *Ballast markings*	S7.7(e)
S15.5 *Gas discharge laboratory life*	S7.7(f)
S15.6 *Replaceable light source physical tests*	S7.7(c)
S15.6 *Replaceable light source physical tests*	S7.7(g)
S16 *Headlamp concealment devices*	
S16.1 *Power loss during headlamp use*	S12.1
S16.2 *Manual device actuation*	S12.2
S16.3 *Single step actuation*	S12.3
S16.4 *Headlamp aiming and replacement*	S12.4
S16.5 *Operational temperature range and time limitation*	S12.5

APPENDIX B: FMVSS 108 REWRITE CROSS REFERENCE

FMVSS 108 REWRITE CITATION	CURRENT FMVSS 108 OR INCORPORATED DOCUMENT CITATION
S16.6 *ECE compliance alternative*	S12.6
S16.7 *Certification election*	S12.7
S17 *Headlamp markings*	Various
S17.1 *Trademark*	S7.2(b)
S17.2 *Voltage and trade number*	S7.2(c)
S17.3 *Sealed beam headlamp markings*	S5.2.2
S17.3 *Sealed beam headlamp markings*	S5.8.2
S17.3 *Sealed beam headlamp markings*	S7.3.1
S17.3 *Sealed beam headlamp markings*	S7.3.7(f)
S17.3 *Sealed beam headlamp markings*	S7.3.8(f)
S17.3 *Sealed beam headlamp markings*	S7.3.9(c)
S17.3 *Sealed beam headlamp markings*	SAE J1383, Apr 1985, 2.1.1
S17.3 *Sealed beam headlamp markings*	SAE J1383, Apr 1985, 5.3.3
S17.3 *Sealed beam headlamp markings*	SAE J1383, Apr 1985, 5.4.3
S17.3 *Sealed beam headlamp markings*	SAE J1383, Apr 1985, 5.4.4
S17.3 *Sealed beam headlamp markings*	SAE J1383, Apr 1985, 5.4.4.1
S17.3 *Sealed beam headlamp markings*	SAE J1383, Apr 1985, 5.4.4.2
S17.3 *Sealed beam headlamp markings*	SAE J1383, Apr 1985, 5.4.4.3
S17.3 *Sealed beam headlamp markings*	SAE J1383, Apr 1985, 5.4.5
S17.4 *Replaceable bulb headlamp markings*	S7.5(g)
S17.5 *Additional headlamp markings*	New reference to other sections
S18 *Replaceable headlamp lens*	S5.8.1
S18 *Replaceable headlamp lens*	S5.8.11
S18 *Replaceable headlamp lens*	S7.2(e)
Figure 1	SAE J578c, Feb 1977, Figure 1
Figure 2	SAE J590b, Oct 1965, Figure 1
Figure 2	SAE J945, Feb 1966, Figure 1
Figure 3	Figure 4-1
Figure 3	Figure 4-2
Figure 3	Figure 4-3
Figure 3	Figure 4-4
Figure 4	SAE J580, Dec 1986, Figure 1
Figure 5	Figure 5
Figure 6	Figure 6
Figure 7	Figure 7
Figure 8	Figure 8
Figure 9	Figure 9
Figure 10	Figure 25
Figure 11	Figure 30-1
Figure 11	Figure 30-2
Figure 11	Figure 30-3
Figure 11	Figure 30-4
Figure 12-1	New
Figure 12-2	New
Figure 13	Figure 31
Figure 14	Figure 16
Figure 15	Figure 22
Figure 16	SAE J580, Dec 1986, Figure 3
Figure 17	SAE J580, Dec 1986, Figure 4
Figure 18	SAE J580, Dec 1986, Figure 2
Relocate to Part 564, Appendix C	Figure 11
Relocate to Part 564, Appendix C	Figure 12

APPENDIX B: FMVSS 108 REWRITE CROSS REFERENCE

FMVSS 108 REWRITE CITATION	CURRENT FMVSS 108 OR INCORPORATED DOCUMENT CITATION
Relocate to Part 564, Appendix C	Figure 13
Relocate to Part 564, Appendix C	Figure 14
Relocate to Part 564, Appendix C	Figure 18
Relocate to Part 564, Appendix C	Figure 21
Relocate to Part 564, Appendix C	SAE J1383, Apr 1985, 5.3
Relocate to Part 564, Appendix C	SAE J1383, Apr 1985, Figure 11
Relocate to Part 564, Appendix C	SAE J1383, Apr 1985, Figure 10
Relocate to Part 564, Appendix C	SAE J1383, Apr 1985, Figure 13
Relocate to Part 564, Appendix C	SAE J1383, Apr 1985, Figure 7
Relocate to Part 564, Appendix C	SAE J1383, Apr 1985, Figure 8
Relocate to Part 564, Appendix C	SAE J1383, Apr 1985, Figure 5
Relocate to Part 564, Appendix C	SAE J1383, Apr 1985, Figure 15
Relocate to Part 564, Appendix C	SAE J1383, Apr 1985, Figure 12
Relocate to Part 564, Appendix C	SAE J1383, Apr 1985, Figure 14
Relocate to Part 564, Appendix C	SAE J1383, Apr 1985, Figure 11
Relocate to Part 564, Appendix C	SAE J1383, Apr 1985, Figure 9
Relocate to Part 564, Appendix C	SAE J1383, Apr 1985, Figure 6
Table I Activation Taillamps	S5.5.10(d)
Table I Activation Taillamps	S5.5.3
Table I Activation Taillamps	S5.5.7(a)
Table I Activation Taillamps	S5.5.7(b)
Table I Activation-Backup lamps	S5.5.10(d)
Table I Activation-Backup lamps	SAE J593c, Feb 1968
Table I Activation-Clearance lamps	S5.5.10(d)
Table I Activation-DRL	S5.5.10(d)
Table I Activation-DRL	S5.5.11(a)
Table I Activation-DRL	S5.5.11(a)(5)
Table I Activation-Headlamp	S5.5.10(b)
Table I Activation-Headlamp	S5.5.8
Table I Activation-Headlamp	S5.5.9
Table I Activation-High mounted stop lamps	S5.5.10(d)
Table I Activation-High mounted stop lamps	S5.5.4
Table I Activation-Identification lamps	S5.5.10(d)
Table I Activation-License plate lamps	S5.5.10(d)
Table I Activation-License plate lamps	S5.5.7(a)
Table I Activation-License plate lamps	S5.5.7(b)
Table I Activation-Motorcycle headlamps	S5.5.10(b)
Table I Activation-Motorcycle headlamps	S5.5.10(c)
Table I Activation-Motorcycle headlamps	S5.5.9
Table I Activation-Parking lamps	S5.5.10(d)
Table I Activation-Parking lamps	S5.5.7(a)
Table I Activation-Parking lamps	S5.5.7(b)
Table I Activation-School bus signal lamps	S5.1.4(b)(ii)
Table I Activation-School bus signal lamps	S5.5.10(a)
Table I Activation-School bus signal lamps	SAE J887, Jul 1964
Table I Activation-Sidemarker lamps	S5.5.10(b)
Table I Activation-Sidemarker lamps	S5.5.10(d)
Table I Activation-Sidemarker lamps	S5.5.7(a)
Table I Activation-Sidemarker lamps	S5.5.7(b)
Table I Activation-Stop lamps	Interpretation-Farber 5/26/00
Table I Activation-Stop lamps	S5.1.1.11
Table I Activation-Stop lamps	S5.5.10(d)
Table I Activation-Stop lamps	S5.5.4
Table I Activation-Turn signals	S5.5.10(a)
Table I Additional Lamps Required on All School Buses except Multifunction School Activity Buses	S5.1.4

APPENDIX B: FMVSS 108 REWRITE CROSS REFERENCE

FMVSS 108 REWRITE CITATION	CURRENT FMVSS 108 OR INCORPORATED DOCUMENT CITATION
Table I Lighting device	S5.1.1.27(a)
Table I Lighting device	S5.1.1.27(b)
Table I Lighting device	S5.1.1.4
Table I Lighting device	S5.5.11(a)
Table I Lighting device	S5.5.11(a)(3)
Table I Lighting device	S5.5.11(b)
Table I Lighting device	Table I
Table I Lighting device	Table II
Table I Lighting device	Table III
Table I Lighting device	Table IV
Table I Mounting height	S5.5.11(b)
Table I Mounting height	Table I
Table I Mounting height	Table II
Table I Mounting height	Table III
Table I Mounting height	Table IV
Table I Mounting Height-Clearance lamps	S5.3.1.4
Table I Mounting location	Table I
Table I Mounting location	Table II
Table I Mounting location	Table III
Table I Mounting location	Table IV
Table I Mounting location-Clearance lamps	S5.3.1.6
Table I Mounting location-Clearance lamps	S5.3.2.1
Table I Mounting location-High mounted stop lamp	S5.3.1.8(a)(1)
Table I Mounting location-Reflex reflectors	S5.3.1.2
Table I Mounting location-Reflex reflectors	S5.3.1.3
Table I Mounting location-Sidemarker lamps	S5.3.1.3
Table I Number and color	S5.1.1.1
Table I Number and color	S5.1.1.10
Table I Number and color	S5.1.1.14
Table I Number and color	S5.1.1.15
Table I Number and color	S5.1.1.2
Table I Number and color	S5.1.1.21
Table I Number and color	S5.5.11(a)(3)
Table I Number and color	Table I
Table I Number and color	Table II
Table I Number and color	Table III
Table I Number and color	Table IV
Table I Number and color-Clearance lamp	S5.1.1.9
Table I Number and color-Intermediate sidemarker lamps	S5.1.1.3
Table I Number and color-School bus signal lamps	S5.1.4(a)
Table I Number and color-School bus signal lamps	S5.1.4(b)(i)
Table II Combination headlamps-2 lamp system	S7.6.2
Table II Combination headlamps-4 lamp system	S7.6.3
Table II Integral beam headlamps-2 lamp system	S7.4(a)(2)
Table II Integral beam headlamps-4 lamp system	S7.4(a)(1)(i)
Table II Integral beam headlamps-4 lamp system U & L	S7.4(a)(1)(iii)
Table II Integral beam headlamps-4 lamp system-simultaneous activation	S7.4(a)(1)(ii)
Table II Integral beam headlamps-beam contributor system	S7.4(a)(3)
Table II Replaceable bulb headlamps-2 lamp system-with HB2	Figure 26
Table II Replaceable bulb headlamps-2 lamp system-with HB2	S7.5(e)
Table II Replaceable bulb headlamps-2 lamp system-without HB2	Figure 26
Table II Replaceable bulb headlamps-2 lamp system-without HB2	S7.5(d)
Table II Replaceable bulb headlamps-4 lamp system-with HB2	Figure 26
Table II Replaceable bulb headlamps-4 lamp system-with HB2	S7.5(e)
Table II Replaceable bulb headlamps-4 lamp system-without HB2	Figure 26
Table II Replaceable bulb headlamps-4 lamp system-without HB2	S7.5(d)
Table II Sealed beam headlamps Type A	S7.3.2

APPENDIX B: FMVSS 108 REWRITE CROSS REFERENCE

FMVSS 108 REWRITE CITATION	CURRENT FMVSS 108 OR INCORPORATED DOCUMENT CITATION
Table II Sealed beam headlamps Type B	S7.3.3
Table II Sealed beam headlamps Type C	S7.3.4
Table II Sealed beam headlamps Type D	S7.3.5
Table II Sealed beam headlamps Type E	S7.3.6
Table II Sealed beam headlamps Type F	S7.3.7
Table II Sealed beam headlamps Type G	S7.3.8
Table II Sealed beam headlamps Type H	S7.3.9
Table II Footnote 1	S5.5.8
Table II Footnote 2	S7.4(d)
Table II Footnote 3	S5.5.8
Table II Footnote 4	S5.5.8
Table II Footnote 5	S5.5.8
Table II Footnote 6	S7.4(a)(3)
Table III Application pattern-Alternating	S5.7.1.3(a)
Table III Application pattern-Alternating	S5.7.1.3(b)
Table III Application pattern-Alternating	S5.7.1.3(c)
Table III Application pattern-Alternating	S5.7.2.2(a)
Table III Application pattern-White	S5.7.2.2(b)
Table III Application location	S5.7.1.4(a)
Table III Application spacing	S5.7.1.4(b)
Table III Application spacing	S5.7.1.4(c)
Table III Trailer rear-Element 1	S5.7.1.4.1(a)
Table III Trailer rear-Element 2	S5.7.1.4.1
Table III Trailer rear-Element 2	S5.7.1.4.1(b)
Table III Trailer rear-Element 3	S5.7.1.4.1
Table III Trailer rear-Element 3	S5.7.1.4.1(c)
Table III Trailer side-Alternating	S5.7.1.4.2(a)
Table III Trailer side-Alternating	S5.7.1.4.2(b)
Table III Truck tractor-Element 1	S5.7.1.4.3(a)
Table III Truck tractor-Element 2	S5.7.1.4.3(b)
Table IV Front turn signal lamp-Effective projected luminous lens area	S5.1.1.25
Table IV Front turn signal lamp-Effective projected luminous lens area	SAE J1395, Apr 1985, 5.3.2
Table IV Front turn signal lamp-Effective projected luminous lens area	SAE J588, Nov 1984, 5.3.2
Table IV High mounted stop lamp-Effective projected luminous lens area	S5.1.1.27(a)(1)
Table IV High mounted stop lamp-Effective projected luminous lens area	S5.1.1.27(b)(1)
Table IV Rear turn signal lamp-Effective projected luminous lens area	S5.1.1.25
Table IV Rear turn signal lamp-Effective projected luminous lens area	S5.1.1.26(a)
Table IV Rear turn signal lamp-Effective projected luminous lens area	S5.1.1.26(b)
Table IV Rear turn signal lamp-Effective projected luminous lens area	SAE J1395, Apr 1985, 5.3.2
Table IV School bus signal lamp-Effective projected luminous lens area	SAE J887, Jul 1964
Table IV Stop lamp-Effective projected luminous lens area	S5.1.1.22
Table IV Stop lamp-Effective projected luminous lens area	S5.1.1.26(a)
Table IV Stop lamp-Effective projected luminous lens area	S5.1.1.26(b)
Table IV Stop lamp-Effective projected luminous lens area	SAE J1398, May 1985, 5.3.2
Table IV Footnote 1	S5.1.1.22
Table V Backup lamp visibility	S5.3.2(e)
Table V High mounted stop lamp visibility	S5.3.2(c)
Table V High mounted stop lamp visibility	S5.3.2(d)
Table V HMSL-Visibility	S5.1.1.27(a)(2)
Table V HMSL-Visibility	S5.1.1.27(b)(2)
Table V Lens area visibility	Figure 19
Table V Lens area visibility	S5.3.2(b)(1)
Table V Luminous intensity visibility	Figure 20
Table V Luminous intensity visibility	S5.3.2(b)(2)
Table V SAE stop lamp visibility	SAE J1398, May 1985, 5.4.1

APPENDIX B: FMVSS 108 REWRITE CROSS REFERENCE

FMVSS 108 REWRITE CITATION	CURRENT FMVSS 108 OR INCORPORATED DOCUMENT CITATION
Table V SAE stop lamp visibility	SAE J586, Feb 1984, 5.4.1
Table V SAE taillamp visibility	SAE J585e, Sep 1977, 4
Table V SAE turn signal lamp visibility	SAE J1395, Apr 1985, 5.4.1
Table V SAE turn signal lamp visibility	SAE J588, Nov 1984, 5.4.1
Table V School bus signal lamp visibility	SAE J887, Jul 1964
Table V Footnote 1	New language
Table V Footnote 2	S5.3.2.3
Table V Footnote 3	Figure 19, Footnote 2
Table V Footnote 4	Figure 20, Footnote 2
Table VI Front turn signal lamp-1.5 x base individual point photometry	SAE J1395, Apr 1985, 5.1.5.4
Table VI Front turn signal lamp-1.5 x base individual point photometry	SAE J1395, Apr 1985, Table 2
Table VI Front turn signal lamp-1.5 x base individual point photometry	SAE J588, Nov 1984, 5.1.5.4
Table VI Front turn signal lamp-1.5 x base individual point photometry	SAE J588, Nov 1984, Table 2
Table VI Front turn signal lamp-1.5 x base zone photometry	SAE J1395, Apr 1985, 5.1.5.4
Table VI Front turn signal lamp-1.5 x base zone photometry	SAE J1395, Apr 1985, Table 2
Table VI Front turn signal lamp-1.5 x base zone photometry	SAE J588, Nov 1984, 5.1.5.4
Table VI Front turn signal lamp-1.5 x base zone photometry	SAE J588, Nov 1984, Table 2
Table VI Front turn signal lamp-2 x base individual point photometry	SAE J1395, Apr 1985, 5.1.5.4
Table VI Front turn signal lamp-2 x base individual point photometry	SAE J1395, Apr 1985, Table 2
Table VI Front turn signal lamp-2 x base individual point photometry	SAE J588, Nov 1984, 5.1.5.4
Table VI Front turn signal lamp-2 x base individual point photometry	SAE J588, Nov 1984, Table 2
Table VI Front turn signal lamp-2 x base zone photometry	SAE J1395, Apr 1985, 5.1.5.4
Table VI Front turn signal lamp-2 x base zone photometry	SAE J1395, Apr 1985, Table 2
Table VI Front turn signal lamp-2 x base zone photometry	SAE J588, Nov 1984, 5.1.5.4
Table VI Front turn signal lamp-2 x base zone photometry	SAE J588, Nov 1984, Table 2
Table VI Front turn signal lamp-2.5 x base individual point photometry	S5.3.1.7
Table VI Front turn signal lamp-2.5 x base individual point photometry	SAE J1395, Apr 1985, 5.1.5.4
Table VI Front turn signal lamp-2.5 x base individual point photometry	SAE J1395, Apr 1985, Table 2
Table VI Front turn signal lamp-2.5 x base individual point photometry	SAE J588, Nov 1984, 5.1.5.4
Table VI Front turn signal lamp-2.5 x base individual point photometry	SAE J588, Nov 1984, Table 2
Table VI Front turn signal lamp-2.5 x base zone photometry	S5.3.1.7
Table VI Front turn signal lamp-2.5 x base zone photometry	SAE J1395, Apr 1985, 5.1.5.4
Table VI Front turn signal lamp-2.5 x base zone photometry	SAE J1395, Apr 1985, Table 2
Table VI Front turn signal lamp-2.5 x base zone photometry	SAE J588, Nov 1984, 5.1.5.4
Table VI Front turn signal lamp-2.5 x base zone photometry	SAE J588, Nov 1984, Table 2
Table VI Front turn signal lamp-Base individual point photometry	SAE J1395, Apr 1985, Table 3
Table VI Front turn signal lamp-Base individual point photometry	SAE J588, Nov 1984, Table 3
Table VI Front turn signal lamp-Base zone photometry	SAE J1395, Apr 1985, Table 1
Table VI Front turn signal lamp-Base zone photometry	SAE J588, Nov 1984, Table 1
Table VI Front turn signal lamp-Photometric ratio	SAE J1395, Apr 1985, 5.1.5.2
Table VI Front turn signal lamp-Photometric ratio	SAE J588, Nov 1984, 5.1.5.3
Table VI Footnote 1	SAE J1395, Apr 1985, Table 1, Footnote a
Table VI Footnote 1	SAE J588, Nov 1984, Table 1, Footnote a
Table VI Footnote 2	SAE J575e, Aug 1970, J
Table VI Footnote 3	S5.3.2.3
Table VI Footnote 4	SAE J1395, Apr 1985, 5.1.5.2
Table VII Rear turn signal lamp-Amber lamp individual point photometry	SAE J1395, Apr 1985, Table 3
Table VII Rear turn signal lamp-Amber lamp individual point photometry	SAE J588, Nov 1984, Table 3
Table VII Rear turn signal lamp-Amber lamp zone photometry	SAE J1395, Apr 1985, Table 1
Table VII Rear turn signal lamp-Amber lamp zone photometry	SAE J588, Nov 1984, Table 1
Table VII Rear turn signal lamp-Photometric ratio	SAE J1395, Apr 1985, 5.1.5.2
Table VII Rear turn signal lamp-Photometric ratio	SAE J588, Nov 1984, 5.1.5.3
Table VII Rear turn signal lamp-Red lamp individual point photometry	SAE J1395, Apr 1985, Table 3
Table VII Rear turn signal lamp-Red lamp individual point photometry	SAE J588, Nov 1984, Table 3
Table VII Rear turn signal lamp-Red lamp zone photometry	SAE J1395, Apr 1985, Table 1
Table VII Rear turn signal lamp-Red lamp zone photometry	SAE J588, Nov 1984, Table 1

APPENDIX B: FMVSS 108 REWRITE CROSS REFERENCE

FMVSS 108 REWRITE CITATION	CURRENT FMVSS 108 OR INCORPORATED DOCUMENT CITATION
Table VII Footnote 1	SAE J1395, Apr 1985, Table 1, Footnote a
Table VII Footnote 1	SAE J588, Nov 1984, Table 1, Footnote a
Table VII Footnote 2	SAE J575e, Aug 1970, J
Table VII Footnote 3	S5.3.2.3
Table VII Footnote 4	SAE J1395, Apr 1985, Table 1, Footnote b
Table VII Footnote 4	SAE J588, Nov 1984, Table 1, Footnote b
Table VII Footnote 5	SAE J1395, Apr 1985, Table 1
Table VII Footnote 5	SAE J588, Nov 1984, Table 1
Table VII Footnote 6	S5.1.1.1
Table VII Footnote 6	SAE J1395, Apr 1985, 5.1.5.3
Table VII Footnote 6	SAE J588e, Sep 1970, 3.9.1
Table VII Footnote 7	SAE J1395, Apr 1985, 5.1.5.2
Table VII Footnote 8	SAE J1395, Apr 1985, 5.1.5.2
Table VII Footnote 8	SAE J588, Nov 1984, 5.1.5.3
Table VIII Taillamp-Individual point photometry	Figure 1a
Table VIII Taillamp-Individual point photometry	Figure 1b
Table VIII Taillamp-Individual point photometry	Figure 1c
Table VIII Taillamp-Maximum photometric intensity	Figure 1b, Footnote 1
Table VIII Taillamp-Zone photometry	Figure 1a
Table VIII Taillamp-Zone photometry	Figure 1b
Table VIII Taillamp-Zone photometry	Figure 1c
Table VIII Footnote 1	SAE J575e, Aug 1970, J
Table VIII Footnote 2	S5.1.1.6
Table VIII Footnote 3	S5.3.2.3
Table IX Stop lamp-Individual point photometry	SAE J1398, May 1985, Table 1
Table IX Stop lamp-Individual point photometry	SAE J586, Feb 1984, Table 1
Table IX Motor driven cycle stop lamp zone photometry	S5.1.1.22
Table IX Stop lamp-Photometric ratio	SAE J1398, May 1985, 5.1.5.2
Table IX Stop lamp-Photometric ratio	SAE J586, Feb 1984, 5.1.5.3
Table IX Stop lamp-Zone photometry	SAE J1398, May 1985, Table 1
Table IX Stop lamp-Zone photometry	SAE J586, Feb 1984, Table 1
Table IX Footnote 1	SAE J1398, May 1985, Table 1, Footnote a
Table IX Footnote 1	SAE J586, Feb 1984, Table 1, Footnote a
Table IX Footnote 2	SAE J575e, Aug 1970, J
Table IX Footnote 3	SAE J1398, May 1985, Table 1, Footnote b
Table IX Footnote 3	SAE J586, Feb 1984, Table 1, Footnote b
Table IX Footnote 4	S5.3.2.3
Table IX Footnote 5	Interpretation-Parkyn 6/1/98
Table IX Footnote 5	S5.1.1.22
Table IX Footnote 6	SAE J1398, May 1985, 5.1.5.2
Table IX Footnote 6	SAE J586, Feb 1984, 5.1.5.3
Table IX Footnote 7	SAE J1398, May 1985, 5.1.5.2
Table IX Footnote 7	SAE J586, Feb 1984, 5.1.5.3
Table X Amber side marker lamp photometry	SAE J592e, Jul 1972, Table 1
Table X Red side marker lamp photometry	SAE J592e, Jul 1972, Table 1
Table X Footnote 1	S5.1.1.8
Table X Footnote 1	SAE J592e, Jul 1972, Table 1, Footnote b
Table X Footnote 2	SAE J575d, Aug 1967, J
Table X Footnote 3	S5.3.2.3
Table XI Amber clearance and identification lamp photometry	SAE J592e, Jul 1972, Table 1
Table XI Red clearance and identification lamp photometry	SAE J592e, Jul 1972, Table 1
Table XI Footnote 1	S5.3.2.3
Table XI Footnote 2	SAE J575d, Aug 1967, J
Table XI Footnote 3	SAE J592e, Jul 1972, Table 1, Footnote a

APPENDIX B: FMVSS 108 REWRITE CROSS REFERENCE

FMVSS 108 REWRITE CITATION	CURRENT FMVSS 108 OR INCORPORATED DOCUMENT CITATION
Table XI Footnote 4	S5.3.2.1
Table XII Backup lamp-Maximum photometric intensity	SAE J593c, Feb 1968, Table 1, Footnote c
Table XII Single backup lamp system-Individual point photometry	S5.1.1.18
Table XII Single backup lamp system-Individual point photometry	SAE J593c, Feb 1968, Table 1, Footnote a
Table XII Single backup lamp system-Zone photometry	Figure 2, Footnote 1
Table XII Two backup lamp system-Individual point photometry	S5.1.1.18
Table XII Two backup lamp system-Individual point photometry	SAE J593c, Feb 1968, Table 1, Footnote b
Table XII Two backup lamp system-Zone photometry	Figure 2, Footnote 1
Table XII Footnote 1	SAE J575d, Aug 1967, J
Table XII Footnote 2	Figure 2, Footnote 1
Table XII Footnote 3	Figure 2, Footnote 1
Table XII Footnote 4	S5.1.1.18
Table XIII License plate lamp target locations	SAE J587, Oct 1981, Figure 1
Table XIII License plate lamp target locations	SAE J587, Oct 1981, Figure 2
Table XIV Parking lamp-Individual point photometry	Figure 1a
Table XIV Parking lamp-Individual point photometry	Figure 1b
Table XIV Parking lamp-Individual point photometry	Figure 1c
Table XIV Parking lamp-Maximum photometric intensity	Figure 1b, Footnote 2
Table XIV Parking lamp-Zone photometry	Figure 1a
Table XIV Parking lamp-Zone photometry	Figure 1b
Table XIV Parking lamp-Zone photometry	Figure 1c
Table XIV Footnote 1	SAE J575d, Aug 1967, J
Table XIV Footnote 2	S5.1.1.6
Table XIV Footnote 3	S5.3.2.3
Table XV High mounted stop lamp-Individual point photometry	Figure 10
Table XV High mounted stop lamp-Zone photometry	Figure 10
Table XV Footnote 1	SAE J575e, Aug 1970, J
Table XV Footnote 2	Figure 10, Footnote 2
Table XV Footnote 3	S5.1.1.27(b)(3)
Table XV Footnote 4	Figure 10, Footnote 1
Table XVI Red reflex reflector photometry	SAE J594f, Jan 1977, Table 1
Table XVI Red reflex reflector photometry	SAE J594f, Jan 1977, Table 1A
Table XVI Amber reflex reflector photometry	SAE J594f, Jan 1977, Table 1, Footnote a
Table XVI Amber reflex reflector photometry	SAE J594f, Jan 1977, Table 1A, Footnote a
Table XVI White reflex reflector photometry	SAE J594f, Jan 1977, Table 1, Footnote a
Table XVI White reflex reflector photometry	SAE J594f, Jan 1977, Table 1A, Footnote a
Table XVI Red conspicuity reflex reflector photometry	S5.7.2.1(b)
Table XVI White horizontal conspicuity reflex reflector photometry	S5.7.2.1(c)
Table XVI White vertical conspicuity reflex reflector photometry	S5.7.2.1(d)
Table XVI Red C2 sheeting photometry	Figure 29
Table XVI Red C2 sheeting photometry	S5.7.1.2
Table XVI Red C3 sheeting photometry	Figure 29
Table XVI Red C3 sheeting photometry	S5.7.1.2
Table XVI Red C4 sheeting photometry	Figure 29
Table XVI Red C4 sheeting photometry	S5.7.1.2
Table XVI White C2 sheeting photometry	Figure 29
Table XVI White C2 sheeting photometry	S5.7.1.2
Table XVI White C3 sheeting photometry	Figure 29
Table XVI White C3 sheeting photometry	S5.7.1.2
Table XVI White C4 sheeting photometry	Figure 29
Table XVI White C4 sheeting photometry	S5.7.1.2
Table XVI Footnote 1	S5.3.2.3

APPENDIX B: FMVSS 108 REWRITE CROSS REFERENCE

FMVSS 108 REWRITE CITATION	CURRENT FMVSS 108 OR INCORPORATED DOCUMENT CITATION
Table XVII Amber lamp photometry	S5.1.4(b)
Table XVII Red lamp photometry	SAE J575d, Aug 1967, J
Table XVII School bus signal lamp photometry	SAE J887, Jul 1964, Table 1
Table XVII Footnote 1	S5.3.2.3
Table XVII Footnote 2	SAE J575d, Aug 1967, J
Table XVIII Upper beam #1 photometry	Figure 15-1
Table XVIII Upper beam #1 photometry	Figure 15-2
Table XVIII Upper beam #2 photometry	Figure 17-1
Table XVIII Upper beam #2 photometry	Figure 17-2
Table XVIII Upper beam #3 photometry	Figure 27-1
Table XVIII Upper beam #3 photometry	Figure 27-2
Table XVIII Upper beam #4 photometry	Figure 28-1, Types 1A1, 1C1, and 1G1
Table XVIII Upper beam #4 photometry	Figure 28-2, Types 1A1, 1C1, and 1G1
Table XVIII Upper beam #5 photometry	Figure 28-1, Types 2A1, 2C1, and 2G1
Table XVIII Upper beam #5 photometry	Figure 28-2, Types 2A1, 2C1, and 2G1
Table XVIII Upper beam #6 photometry	Figure 15-1
Table XVIII Upper beam #6 photometry	Figure 15-2
Table XVIII Upper beam #6 photometry	S7.4(a)(1)(ii)
Table XIX 10° U-90°U Test area	Interpretation-Spingler 7/2/99
Table XIX Lower beam #1M photometry	Figure 15-1
Table XIX Lower beam #1V photometry	Figure 15-2
Table XIX Lower beam #2M photometry	Figure 17-1
Table XIX Lower beam #2V photometry	Figure 17-2
Table XIX Lower beam #2V photometry	Figure 28-2, Types 2A1, 2C1 and 2G1
Table XIX Lower beam #3M photometry	Figure 27-1
Table XIX Lower beam #3V photometry	Figure 27-2
Table XIX Lower beam #4M photometry	Figure 28-2, Types 2A1, 2C1, and 2G1
Table XIX Lower beam #4V photometry	Figure 15-2
Table XIX Lower beam #4V photometry	S7.4(a)(1)(ii)
Table XIX Lower beam #5M photometry	Figure 15-1
Table XIX Lower beam #5M photometry	S7.4(a)(1)(ii)
Table XX Motor driven cycle photometry	Figure 32
Table XX Motor driven cycle with single lamp photometry	Figure 32
Table XX Motorcycle photometry	Figure 32
Table XXI Turn signal operating unit-Durability test	S5.1.1.13
Table XXI Turn signal operating unit-Durability test	SAE J589, Apr 1964
Table XXI Vehicular hazard warning signal operating unit-Durability test	SAE J910, Jan 1966, 4
Table XXI Turn signal flasher-Starting time test	S5.1.1.19
Table XXI Turn signal flasher-Starting time test	SAE J590b, Oct 1965, 1
Table XXI Turn signal flasher-Voltage drop test	S5.1.1.20
Table XXI Turn signal flasher-Voltage drop test	SAE J590b, Oct 1965, 2
Table XXI Turn signal flasher-Flash rate and percent current "on" time test	S5.1.1.19
Table XXI Turn signal flasher-Flash rate and percent current "on" time test	SAE J590b, Oct 1965, 3
Table XXI Turn signal flasher-Durability test	SAE J590b, Oct 1965
Table XXI Vehicular hazard warning signal flasher- Starting time test	SAE J945, Feb 1966, 1
Table XXI Vehicular hazard warning signal flasher-Voltage drop test	S5.1.1.20
Table XXI Vehicular hazard warning signal flasher-Voltage drop test	SAE J945, Feb 1966, 2
Table XXI Vehicular hazard warning signal flasher-Flash rate and percent current "on" time test	SAE J945, Feb 1966, 3
Table XXI Vehicular hazard warning signal flasher-Durability test	SAE J945, Feb 1966, 4
Table XXI Semiautomatic headlamp beam switching device-Sensitivity test	SAE J565b, Feb 1969, 4.2
Table XXI Semiautomatic headlamp beam switching device-Voltage regulation test	SAE J565b, Feb 1969, 4.3
Table XXI Semiautomatic headlamp beam switching device-Manual override test	SAE J565b, Feb 1969, 4.4
Table XXI Semiautomatic headlamp beam switching device-Warmup test	SAE J565b, Feb 1969, 4.5

APPENDIX B: FMVSS 108 REWRITE CROSS REFERENCE

FMVSS 108 REWRITE CITATION	CURRENT FMVSS 108 OR INCORPORATED DOCUMENT CITATION
Table XXI Semiautomatic headlamp beam switching device-Temperature test	SAE J565b, Feb 1969, 4.7
Table XXI Semiautomatic headlamp beam switching device-Dust test	SAE J565b, Feb 1969, 4.8
Table XXI Semiautomatic headlamp beam switching device-Corrosion test	SAE J565b, Feb 1969, 4.9
Table XXI Semiautomatic headlamp beam switching device-Vibration test	SAE J565b, Feb 1969, 4.10
Table XXI Semiautomatic headlamp beam switching device-Sunlight test	SAE J565b, Feb 1969, 4.11
Table XXI Semiautomatic headlamp beam switching device-Durability test	SAE J565b, Feb 1969, 4.12
Table XXI Semiautomatic headlamp beam switching device-Return to upper beam test	SAE J565b, Feb 1969, 4.13
Table XXII Vibration test	SAE J575d, Aug 1967, E
Table XXII Vibration test	SAE J575e, Aug 1970, E
Table XXII Moisture test	SAE J575d, Aug 1967, F
Table XXII Moisture test	SAE J575e, Aug 1970, F
Table XXII Dust test	SAE J575d, Aug 1967, G
Table XXII Dust test	SAE J575e, Aug 1970, G
Table XXII Corrosion test	SAE J575d, Aug 1967, H
Table XXII Corrosion test	SAE J575e, Aug 1970, H
Table XXII Out of focus test	SAE J575d, Aug 1967, K
Table XXII Color test	S5.1.5
Table XXII Color test	SAE J578c, Feb 1977
Table XXII Plastic optical material tests	S5.1.2
Table XXII Plastic optical material tests	S5.1.2(a)
Table XXII Plastic optical material tests	S5.1.2(b)
Table XXII Plastic optical material tests	S5.1.2(c)
Table XXII Plastic optical material tests	S5.1.2(d)
Table XXII Plastic optical material tests	S5.1.2(e)
Table XXII Plastic optical material tests	S5.1.2(f)
Table XXII Plastic optical material tests	S5.1.2(g)
Table XXII Plastic optical material tests	SAE J576, Jul 1991
Table XXIII Abrasion test	S7.4(h)(1)
Table XXIII Abrasion test	S8.1
Table XXIII Abrasion test-procedure	S8.2(a)
Table XXIII Abrasion test-procedure	S8.2(b)
Table XXIII Abrasion test-procedure	S8.2(c)
Table XXIII Abrasion test-procedure	S8.2(d)
Table XXIII Abrasion test-procedure	S8.2(e)
Table XXIII Chemical resistance test	S7.4(h)(2)
Table XXIII Chemical resistance test	S8.1
Table XXIII Chemical resistance test-procedure	S8.3(a)
Table XXIII Chemical resistance test-procedure	S8.3(b)
Table XXIII Chemical resistance test-procedure	S8.3(c)
Table XXIII Corrosion test	S7.4(g)
Table XXIII Corrosion test	S7.5(i)
Table XXIII Corrosion test	S7.8.5.1(c)
Table XXIII Corrosion test	SAE J580, Dec 1986, 4.1.2
Table XXIII Corrosion test	SAE J580, Dec 1986, 5.1.1.2
Table XXIII Corrosion test-procedure	SAE J575, Dec 1988, 4.4
Table XXIII Corrosion-connector test	S7.4(h)(3)
Table XXIII Corrosion-connector test-procedure	S8.4(a)
Table XXIII Corrosion-connector test-procedure	S8.4(b)
Table XXIII Corrosion-connector test-procedure	S8.4(c)
Table XXIII Dust test	S7.4(h)(4)
Table XXIII Dust test	S8.1
Table XXIII Dust test	S8.5
Table XXIII Temperature cycle test	S7.4(h)(5)(i)
Table XXIII Temperature cycle test and internal test-procedure	S8.6
Table XXIII Temperature cycle test-procedure	S8.6.1

APPENDIX B: FMVSS 108 REWRITE CROSS REFERENCE

FMVSS 108 REWRITE CITATION	CURRENT FMVSS 108 OR INCORPORATED DOCUMENT CITATION
Table XXIII Internal heat test	S7.4(h)(5)(ii)
Table XXIII Internal heat test	S8.1
Table XXIII Internal heat test-procedure	S8.6.2(a)
Table XXIII Internal heat test-procedure	S8.6.2(b)
Table XXIII Internal heat test-procedure	S8.6.2(c)
Table XXIII Humidity test	S5.8.1
Table XXIII Humidity test	S7.4(h)(6)
Table XXIII Humidity test-procedure	S8.7(a)
Table XXIII Humidity test-procedure	S8.7(b)
Table XXIII Humidity test-procedure	S8.7(c)
Table XXIII Humidity test-procedure	S8.7(d)
Table XXIII Humidity test-procedure	S8.7(e)
Table XXIII Humidity test-procedure	S8.7(f)
Table XXIII Vibration test	S7.3.2(c)
Table XXIII Vibration test	S7.3.7(i)
Table XXIII Vibration test	S7.3.8(d)
Table XXIII Vibration test	S7.4(h)(7)
Table XXIII Vibration test-procedure	S8.8
Table XXIII Vibration test-procedure	SAE J575, Dec 1988, 4.1
Table XXIII Sealing test-procedure	S8.9
Table XXIII Chemical resistance of replaceable lens reflectors test	S8.1
Table XXIII Chemical resistance of replaceable lens reflectors test-procedure	S8.10.1(a)
Table XXIII Chemical resistance of replaceable lens reflectors test-procedure	S8.10.1(b)
Table XXIII Chemical resistance of replaceable lens reflectors test-procedure	S8.10.1(c)
Table XXIII Corrosion resistance of replaceable lens reflectors test	S8.1
Table XXIII Corrosion resistance of replaceable lens reflectors test-procedure	S8.10.2(a)
Table XXIII Corrosion resistance of replaceable lens reflectors test-procedure	S8.10.2(b)
Table XXIII Inward force test	S7.8.5.1(b)
Table XXIII Inward force test-performance requirement	SAE J580, Dec 1986, 5.1.3
Table XXIII Inward force test-procedure	SAE J580, Dec 1986, 4.3
Table XXIII Torque deflection test	S7.3.8(c)(2)
Table XXIII Torque deflection test	S7.8.5.1(a)
Table XXIII Torque deflection test-procedure	SAE J580, Dec 1986, 4.5
Table XXIII Torque deflection test-performance requirement	SAE J580, Dec 1986, 5.1.5
Table XXIII Retaining ring test	S7.3.2(b)
Table XXIII Retaining ring test-performance requirement	SAE J580, Dec 1986, 5.1.6
Table XXIII Headlamp connector test	S7.3.2(b)
Table XXIII Headlamp connector test	SAE J580, Dec 1986, Figure 1
Table XXIII Headlamp connector test-procedure	SAE J580, Dec 1986, 4.4
Table XXIII Headlamp connector test-performance requirement	SAE J580, Dec 1986, 5.1.4
Table XXIII Headlamp wattage test	S7.3.2(d)
Table XXIII Headlamp wattage test	S7.3.3(b)
Table XXIII Headlamp wattage test	S7.3.5(b)
Table XXIII Headlamp wattage test	S7.3.6(b)
Table XXIII Headlamp wattage test	S7.3.7(g)
Table XXIII Headlamp wattage test	S7.3.8(e)
Table XXIII Headlamp wattage test	S7.3.9(b)
Table XXIII Aiming adjustment test-Laboratory	S7.3.7(e)(5)
Table XXIII Aiming adjustment test-Laboratory	S7.4(f)
Table XXIII Aiming adjustment test-Laboratory	S7.5(h)
Table XXIII Aiming adjustment test-Laboratory	S7.8.2.1(c)
Table XXIII Aiming adjustment test-Laboratory	S7.8.2.2(a)
Table XXIII Aiming adjustment test-Laboratory	S7.8.2.2(b)
Table XXIII Aiming adjustment test-Laboratory	S7.8.2.2(c)
Table XXIII Aiming adjustment test-Laboratory	S7.8.2.2(d)
Table XXIII Aiming adjustment test-Laboratory	S7.8.3
Table XXIII Aiming adjustment test-Laboratory	S7.8.4
Table XXIII Aiming adjustment test-Laboratory-procedure	SAE J580, Dec 1986, 4.2

APPENDIX B: FMVSS 108 REWRITE CROSS REFERENCE

FMVSS 108 REWRITE CITATION	CURRENT FMVSS 108 OR INCORPORATED DOCUMENT CITATION
Table XXIII Aiming adjustment test-Laboratory-performance requirement	SAE J580, Dec 1986, 5.1.2.1
Table XXIII Aiming adjustment test-Laboratory-performance requirement	SAE J580, Dec 1986, 5.1.2.2
Table XXIII Aiming adjustment test-On vehicle	S7.8.2.1(a)
Table XXIII Aiming adjustment test-On vehicle	S7.8.2.1(b)
Table XXIII Aiming adjustment test-On vehicle	S7.8.3
Table XXIII Aiming adjustment test-On vehicle-procedure	SAE J580, Dec 1986, 4.2
Table XXIII Deflection test for replaceable light sources	S7.7(g)
Table XXIII Deflection test for replaceable light sources-procedure	S9
Table XXIII Pressure test for replaceable light sources	S7.7(c)
Table XXIII VHAD scale graduation test	S7.8.5.2(d)(3)(i)
Table XXIII VHAD cold scale graduation test	S7.8.5.2(d)(3)(i)
Table XXIII VHAD cold scale graduation test	S7.8.5.2(d)(3)(ii)(A)
Table XXIII VHAD hot scale graduation test	S7.8.5.2(d)(3)(i)
Table XXIII VHAD hot scale graduation test	S7.8.5.2(d)(3)(ii)(B)
Table XXIII VHAD thermal cycle test	S7.8.5.2(d)(3)(i)
Table XXIII VHAD thermal cycle test	S7.8.5.2(d)(3)(ii)(C)
Table XXIII VHAD corrosion test	S7.8.5.2(d)(3)(i)
Table XXIII VHAD corrosion test	S7.8.5.2(d)(3)(ii)(D)
Table XXIII VHAD photometry test	S7.8.5.2(d)(3)(i)
Table XXIII VHAD photometry test	S7.8.5.2(d)(3)(ii)(E)

BILLING CODE 4910–59–C

APPENDIX C: LIST OF FIGURES

FIGURE NO.	TITLE
1	CHROMATICITY DIAGRAM [SAE J578c, FEB 1977, FIGURE 1].
2	FLASHER PERFORMANCE CHART [SAE J590b, OCT 1965, FIGURE 1].
3	REPLACEABLE BULB HEADLAMP AIM PADS [CURRENT FMVSS 108 FIG. 4–1 TO 4–4].
4	HEADLAMP CONNECTOR TEST SETUP [SAE J580, DEC 1986, FIGURE 1].
5	HEADLAMP ABRASION TEST FIXTURE [CURRENT FMVSS 108 FIGURE 5].
6	THERMAL CYCLE TEST PROFILE [CURRENT FMVSS 108 FIGURE 6].
7	DIRT/AMBIENT TEST SETUP [CURRENT FMVSS108 FIGURE 7].
8	REPLACEABLE BULB DEFLECTION TEST SETUP [CURRENT FMVSS 108 FIGURE 8].
9	ENVIROMENTAL TEST PROFILE [CURRENT FMVSS108 FIGURE 9].
10	HEADLAMP REPLACEABLE BULB PRESSURE TEST SETUP [CURRENT FMVSS108 FIGURE 25].

APPENDIX C: LIST OF FIGURES—Continued

FIGURE NO.	TITLE
11	TRAILER CONSPICUITY TREATMENT EXAMPLES [CURRENT FMVSS108 FIGURES 30–1 TO 30–4].
12–1	TRAILER CONSPICUITY DETAIL I [NEW].
12–2	TRAILER CONSPICUITY DETAIL II [NEW].
13	TRACTOR CONSPICUITY TREATMENT EXAMPLES [CURRENT FMVSS108 FIGURE 31].
14	92 x 150 HEADLAMP AIM DEFLECTION TEST SETUP [CURRENT FMVSS108 FIGURE 16].
15	TYPES G AND H HEADLAMP AIM DEFLECTION TEST SETUP [CURRENT FMVSS108 FIGURE 22].
16	TYPES A AND E HEADLAMP AIM DEFLECTION TEST SETUP [SAE J580, DEC 1986, FIGURE 3].
17	TYPE B HEADLAMP AIM DEFLECTION TEST SETUP [SAE J580, DEC 1986, FIGURE 4].
18	TYPES C AND D HEADLAMP AIM DEFLECTION TEST SETUP [SAE J580, DEC 1986, FIGURE 2].

Figures to Incorporate in 49 CFR Part 564 Appendix C

LF HEADLAMP DIMENSIONAL INFORMATION [CURRENT FMVSS 108 FIGURE 11]

UF HEADLAMP DIMENSIONAL INFORMATION [CURRENT FMVSS 108 FIGURE 12]

LF/UF MOUNTING FEATURES [CURRENT FMVSS 108 FIGURE 13]

LF/UF MOUNTING RING [CURRENT FMVSS 108 FIGURE 14]

TYPE G & H HEADLAMP DIMENSIONAL INFORMATION [CURRENT FMVSS 108 FIGURE 18]

TYPE G & H HEADLAMP MOUNTING INFORMATION [CURRENT FMVSS 108 FIGURE 21]

TYPE 1A1 HEADLAMP DIMENSIONAL INFORMATION [SAE J1383, APR 1985, FIGURE 11]

TYPE 2A1 HEADLAMP DIMENSIONAL INFORMATION [SAE J1383, APR 1985, FIGURE 10]

TYPE 2B1 HEADLAMP DIMENSIONAL INFORMATION [SAE J1383, APR 1985, FIGURE 13]

TYPE 1C1 HEADLAMP DIMENSIONAL INFORMATION [SAE J1383, APR 1985, FIGURE 7]

TYPE 2C1 HEADLAMP DIMENSIONAL INFORMATION [SAE J1383, APR 1985, FIGURE 8]

TYPE 2D1 HEADLAMP DIMENSIONAL INFORMATION [SAE J1383, APR 1985, FIGURE 5]

TYPE 2E1 HEADLAMP DIMENSIONAL INFORMATION [SAE J1383, APR 1985, FIGURE 15]

TYPES 1A1, 2A1, AND 2E1 HEADLAMP MOUNTING RING/LAMP BODY DIMENSIONAL INFORMATION [SAE J1383, APR 1985, FIGURE 12]

TYPE 2B1 HEADLAMP MOUNTING RING/LAMP BODY DIMENSIONAL INFORMATION [SAE J1383, APR 1985, FIGURE 14]

TYPES 1C1 AND 2C1 HEADLAMP MOUNTING RING/LAMP BODY DIMENSIONAL INFORMATION [SAE J1383, APR 1985, FIGURE 9]

TYPE 2D1 HEADLAMP MOUNTING RING/LAMP BODY DIMENSIONAL INFORMATION [SAE J1383, APR 1985, FIGURE 6]

[FR Doc. 05–24421 Filed 12–29–05; 8:45 am]

BILLING CODE 4910–59–P