Federal Register

Wednesday,
April 5, 2006

Part II

Department of Justice

Antitrust Division

Competitive Impact Statements and Proposed Consent Judgments—Response to Public Comments; Notice

DEPARTMENT OF JUSTICE

Antitrust Division

Response to Public Comments on the Proposed Final Judgments in *United States* v. *SBC Communications, Inc. and AT&T Corp.* and *United States* v. *Verizon Communications Inc. and MCI, Inc.*

Pursuant to the Antitrust Procedures and Penalties Act, 15 U.S.C. 16(b)–(h), the United States hereby publishes the three comments received on the proposed Final Judgments in *United States* v. *SBC Communications, Inc. and AT&T Corp.*, Civil Case No. 1:05CV02102 (EGS), and *United States* v. *Verizon Communications, Inc. and MCI, Inc.,* Civil Case No. 1:05CV02103 (EGS), filed on March 21, 2006 in the United States District Court for the District of Columbia, together with the response of the United States to the comments. On October 27, 2005, the United States filed separate complaints alleging that the proposed acquisitions of AT&T Corp. (''AT&T'') by SBC Communications, Inc. (''SBC'') and MCI, Inc. (''MCI'') by Verizon Communications, Inc. (''Verizon'') would both violate section 7 of the Clayton Act, 15 U.S.C. 18, by substantially lessening competition in the provision of local private lines (also called ''special access'') and other telecommunications services that rely on local private lines in eleven and eight, respectively, metropolitan areas—SBC/AT&T: Chicago; Dallas-Fort Worth; Detroit; Hartford-New Haven, Connecticut; Indianapolis; Kansas City; Los Angeles; Milwaukee; San Diego; San Francisco-San Jose; and St. Louis; and Verizon/MCI: Baltimore; Boston; New York; Philadelphia; Tampa; Richmond, Virginia; Providence, Rhode Island; and Portland, Maine. To restore competition, the proposed Final Judgments, if entered, would require the defendants in both actions to divest assets in the metropolitan areas listed above in order to proceed with the acquisitions. Public comment was invited within the statutory 60-day comment period. The comment and the response of the United States thereto are hereby published in the **Federal Register**, and shortly thereafter these documents will be referenced in a Certificate of Compliance with Provisions of the Antitrust Procedures and Penalties and filed with the Court, together with a motion urging the Court to enter the proposed Final Judgment. Copies of the Complaint, the proposed Final Judgment, the Competitive Impact Statement, and other papers are currently available for inspection in Room 200 of the Antitrust Division, Department of Justice, 325 Seventh Street, NW., Washington, DC 20530, telephone: (202) 514–2481 and the Clerk's Office, United States District Court for the District of Columbia, 333 Constitution Avenue, NW., Washington, DC 20001. (The United States's Certificate of Compliance with Provisions of the Antitrust Procedures and Penalties Act will be made available at the same locations shortly after they are filed with the Court.) Copies of any of these materials may be obtained upon request and payment of a copying fee.

J. Robert Kramer II,

Director of Operations, Antitrust Division.

In The United States District Court for The District of Columbia

United States of America, Plaintiff, v. SBC Communications, Inc. and AT&T Corp., Defendants

[Civil Action No.: 1:05CV02102 (EGS)]

United States of America, Plaintiff, v. Verizon Communications Inc. and MCI, Inc., Defendants

[Civil Action No.: 1:05CV02103 (EGS)]

Plaintiff United States' Response to Public Comments

Pursuant to the requirements of the antitrust Procedures and Penalties Act, 15 U.S.C. 16(b)–(h) (''APPA'' or ''Tunney Act''), the United States hereby responds to the public comments received regarding the proposed Final Judgments in these cases. After careful consideration of the comments, the United States continues to believe that the proposed Final Judgments will provide an effective and appropriate remedy for the antitrust violations alleged in the Complaints. The United States will move the court for entry of the proposed Final Judgments after the public comments and this Response have been published in the **Federal Register,** pursuant to 15 U.S.C. 16(d).

On October 27, 2005, the United States filed the Complaints in these matters alleging that the proposed acquisition of AT&T Corp. (''AT&T'') by SBC Communications, Inc. (''SBC''), and the proposed acquisition of MCI, Inc. (''MCI'') by Verizon Communications Inc. (''Verizon''), would violate Section 7 of the Clayton Act, 15 U.S.C. 18.[1] Simultaneously with the filing of the Complaints, the United States filed proposed Final Judgments [2] and Stipulations signed by plaintiff and defendants consenting to the entry of the respective proposed Final Judgments after compliance with the requirements of the Tunney Act. Pursuant to those requirements, the United States filed Competitive Impact Statements (''CISs'') in this Court on November 16, 2005; published the proposed Final Judgments and CISs in the **Federal Register** on December 15, 2005, see *United States* v. *SBC Communications Inc. and AT&T Corp.,* 70 FR 74,334, 2005 WL 3429685; *United States* v. *Verizon Communications Inc. and MCI, Inc.,* 70 FR 74,350 2005 WL 3429686; and published summaries of the terms of the proposed Final Judgment and CISs, together with directions for the submission of written comments relating to the proposed Final Judgments, in the Washington Post for seven days beginning on December 8, 2005 and ending on December 14, 2005. The 60-day period for public comments ended on February 13, 2006, and three comments were received as described below and attached hereto.

I. Background: The United States' Investigation and Proposed Resolution

On January 30, 2005, SBC entered into an agreement to acquire AT&T. On February 14, 2005, Verizon entered into an agreement to acquire MCI. Over the following eight and a half months, the United States Department of Justice (''Department'') conducted an extensive, detailed investigation into the competitive effects of the proposed transactions. As part of this investigation, the Department issued Second Requests to the merging parties, as well as more than 60 Civil Investigative Demands to third parties. In response, the Department received and considered more than 25 million pages of material. More than 200 interviews were conducted with customers, competitors, and other

[1] Because these matters raised similar issues, including almost identical allegations of competitive harm and proposed relief, the United States filed an uncontested motion to consolidate them on November 1, 2005. That motion was granted by the Court. Because the Complaints, Competitive Impact Statements, and proposed Final Judgments in the two matters are virtually identical, the documents will be referred to collectively. Moreover, because the comments received by the United States generally relate to both matters, this response will also refer to both, unless otherwise indicated.

[2] The United States filed amended proposed Final Judgments on November 28, 2005. The amendments added appropriate procedural recitals regarding the Court's public interest determination to both proposed Final Judgments and corrected an error in the SBC/AT&T proposed consent decree, conforming it to the parties' intent. The SBC/AT&T Competitive Impact Statement reflects the correction to the proposed Final Judgments. The corrected versions, not the original versions, were published in the **Federal Register.** None of the public comments addressed this aspect of the proposed Final Judgment.

individuals with knowledge of the industry. Two commenters here—COMPTEL and ACTel—represented carriers who had complaints about the proposed transactions; the investigative staff carefully analyzed their allegations and submissions, as well as the views and data presented by dozens of others. While the Department was reviewing these transactions, the Federal Communications Commission (''FCC''),[3] numerous state public utility commissions, and several state Attorneys General conducted their own reviews. The third commenter, the Attorney General of the State of New York, was one of the reviewing state officials.

As part of the Department's investigation, it considered the potential competitive effects of these transactions on numerous products, customer groups, and geographic areas. For the vast majority of these, the Department concluded that the proposed mergers were unlikely to reduce competition. Indeed, the Department concluded that, viewed as a whole, the transactions were likely to create substantial efficiencies that could benefit consumers. For the most part, the mergers combined firms with complementary strengths, assets, and customer bases. Whereas SBC's and Verizon's strengths were in the ''mass market'' and small business segments, AT&T's and MCI's strengths were in serving large enterprises; whereas SBC and Verizon had very extensive local networks, AT&T and MCI had extensive national and international networks. In areas of significant overlap, with the exception of the markets alleged in the Complaints, there will remain, post-merger, sufficient competitive alternatives such that no anticompetitive effects are likely.

Because AT&T and MCI have among the most extensive local networks of any competitive local exchange carriers (''CLECs'') in SBC's and Verizon's regions, the Department devoted substantial time and resources to analyzing those overlapping assets, and the products and markets they implicated to determine whether the merger would likely reduce competition.[4] The Department sought extensive data from the merging firms as well as dozens of CLECs regarding their local networks, and the products provided over those networks. In every metropolitan area of overlap, the Department found that there were multiple CLECs with local networks offering products and services very similar to the merging firms. Indeed, in most of the overlapping metropolitan areas the acquired CLEC did not even have the most extensive local network in terms of number of buildings connected or miles of fiber-optic cable installed. And even in the few cases where the acquired CLEC did have the most extensive local network, there were ample other firms that have extensive networks and that continue to grow those networks.

Nevertheless, the Department identified one limited competitive problem: for hundreds of buildings, the transactions would combine the only two firms that owned or controlled a direct fiber-optic connection to the building, and for a subset of these buildings, entry (i.e., another carrier constructing its own fiber-optic connection) was not sufficiently likely to offset the potential anticompetitive effect. These fiber-optic connections are used to provide Local Private Lines[5] to wholesale and retail customers and value-added telecommunications services that rely on Local Private Lines. Accordingly, the Department filed Complaints alleging competitive harm in this set of buildings and sought a remedy that would ensure that for each of the buildings where there would otherwise be a reduction in competition, there would be, post-merger, another carrier besides the merged firm with a direct fiber-optic connection to the building. In the Department's judgment, a divestiture of fiber-optic capacity to the buildings of concern would remedy this potential loss of competition.[6]

As explained more fully in the Complaints and CISs, the proposed transaction would lessen competition substantially for (a) Local Private Lines and (b) voice and data telecommunications services that rely on Local Private Lines in several hundred commercial buildings. To restore competition, the proposed Final Judgments, if entered, would require a divestiture of indefeasible rights of use (''IRUs'')[7] for lateral connections[8] to the buildings in question along with transport facilities[9] sufficient to enable the IRUs to be used by the purchaser to provide telecommunications services. Entry of the proposed Final Judgments would terminate these actions, except that the Court would retain jurisdiction to construe, modify, or enforce the provisions of the proposed Final Judgments and punish violations thereof.[10]

[3] The FCC approved the proposed mergers in orders adopted on October 31, 2005, and released on November 17, 2005, including voluntary commitments of the parties as conditions. Memorandum Opinion and Order, In the Matter of SBC Communications Inc. and AT&T Corp. Applications for Approval of Transfer of Control, FCC WC Docket No. 05–65 (rel. Nov. 17, 2005), 2005 WL 3099626; Memorandum Opinion and Order, In the Matter of Verizon Communications Inc. and MCI, Inc. Applications for Approval of Transfer of Control, FCC WC Docket No. 05–75 (rel. Nov. 17, 2005), 2005 WL 3099625 (collectively ''FCC Orders'').

[4] Local networks typically are comprised principally of fiber-optic cable running throughout the metropolitan area. Fiber connecting aggregation points is often called ''transport'' fiber, and fiber running from a central office or node to an end-user building is often referred to as a loop or ''last-mile connection.'' These local networks are typically used to provide services to large enterprise customers. As part of its investigation, the Department interviewed scores of such customers, and received affidavits from dozens of others. In general, customers had little competitive concern regarding the proposed mergers and, indeed, many believed they were likely to be beneficial.

[5] ''A Local Private Line is a dedicated, point-to-point circuit offered over copper and/or fiber-optic transmission facilities that originates and terminates within a single metropolitan area and typically includes at least one local loop. Local Private Lines are sold at both retail (to business customers) and wholesale (to other carriers). [SBC and Verizon refer] to Local Private Line circuits as 'special access.' Depending on how they are configured, Local Private Lines can be used to carry voice traffic, data, or a combination of the two. Local Private Lines may be purchased as stand-alone products but are also an important input to value-added voice and data telecommunications services that are offered to business customers.'' Complaints ¶¶ 13–14.

[6] The modest nature of the competitive problem, as compared to the overall value of the mergers, is illustrated by the fact that in 2004, Local Private Lines offered by AT&T in SBC's territory accounted for less than 0.3 per cent of AT&T's total revenues. And, the revenues attributable to the buildings at issue in this case would be a fraction of that.

[7] ''An IRU (or indefeasible right of use) is a long-term leasehold interest commonly used in the telecommunications industry that gives the holder the right to use specified strands of fiber in a telecommunications facility.'' CISs at 11.

[8] A ''lateral connection'' is the last segment of the fiber-optic cable to a building, running from the point of entry of the building to the splice point with fiber used to serve different buildings. CISs at 10.

[9] ''Transport,'' as used in the industry, has no precise meaning but generally refers to fiber-optic capacity to carry data between aggregation points on a network. Often, it is used to refer to ''interoffice transport,'' i.e., carriage of data between two central offices (switching facilities). In the proposed Final Judgments and CISs the term more broadly refers to facilities used to carry data from the splice point of the lateral connection to the purchaser's network. CISs at 9–11.

[10] The SBC/AT&T merger closed on December 18, 2005, and the Verizon/MCI merger closed on January 6, 2006. In keeping with the United States' standard practice, neither the Stipulations nor the proposed Final Judgment prohibited closing the mergers. *See* ABA Section of Antitrust Law, *Antitrust Law Developments* 387 (5th ed. 2002) (noting that ''[t]he Federal Trade Commission (as well as the Department of Justice) generally will permit the underlying transaction to close during the notice and comment period''). Such a prohibition could interfer with many time-sensitive deals or prevent the realization of substantial efficiencies. Here, the magnitude of the potential competitive harm from the mergers was relatively small, but delaying the closing of the transactions by the several months required for the Tunney Act

Continued

II. Legal Standard Governing the Court's Public Interest Determination

Upon publication of the public comments and this Response, the United States will have fully complied with the Tunney Act. It will then ask the Court to determine that entry of the proposed Final Judgments would be ''in the public interest,'' and to enter them. 15 U.S.C. 16(e). In making its public interest determination, the Court shall consider:

> (A) the competitive impact of such judgment, including termination of alleged violations, provisions for enforcement and modification, duration or relief sought, anticipated effects of alternative remedies actually considered, whether its terms are ambiguous, and any other competitive considerations bearing upon the adequacy of such judgment that the court deems necessary to a determination of whether the consent judgment is in the public interest; and
>
> (B) the impact of entry of such judgment upon competition in the relevant market or markets, upon the public generally and individuals alleging specific injury from the violations set forth in the complaint including consideration of the public benefit, if any, to be derived from a determination of the issues at trial.

Id. section 16(e)(1). As the Court of Appeals has held, the Tunney Act permits a court to consider, among other things, the relationship between the remedy secured and the specific allegations set forth in the government's complaint, whether the proposed Final Judgment is sufficiently clear, whether enforcement mechanisms are sufficient, and whether the proposed Final Judgment may positively harm third parties. See *United States* v. *Microsoft Corp.,* 56 F.3d 1448, 1458–62 (D.C. Cir. 1995).

The Tunney Act is not intended to impose on a court procedures that would impair the utility of consent decrees in antitrust enforcement. Thus, the Act is not to ''be construed to require the court to conduct an evidentiary hearing or to require the court to permit anyone to intervene.'' 15 U.S.C. 16(e)(2)(2006). In conducting its public interest inquiry, ''[t]he court is nowhere compelled to go to trial or to engage in extended proceedings which might have the effect of vitiating the benefits of prompt and less costly settlement through the consent decree process.'' 119 Cong. Rec. 24,598 (1973) (statement of Sen. Tunney).[11] Rather:

> [a]bsent a showing of corrupt failure of the government to discharge its duty, the Court, in making its public interest finding, should * * * carefully consider the explanations of the government in the competitive impact statement and its responses to comments in order to determine whether those explanations are reasonable under the circumstances.

United States v. *Mid-America Dairymen, Inc.,* 1977–1 Trade Cas. (CCH) ¶ 61,508, at ¶ 71,980, 1977 WL 4352, at *9 (W.D. Mo. 1977).

A court's task under the Tunney Act is to review the negotiated settlement of a dispute, not to devise a remedy for an adjudicated antitrust violation. Accordingly, a court may not ''engage in an unrestricted evaluation of what relief would best serve the public.'' *United States* v. *BNS Inc.,* 858 F.2d 456, 462 (9th Cir. 1988) (quoting *United States* v. *Bechtel Corp.,* 648 F.2d 660, 666 (9th Cir. 1981)); see also Microsoft, 56 F.3d at 1460–62.[12] Courts have held that:

> [t]he balancing of competing social and political interests affected by a proposed antitrust consent decree must be left, in the first instance, to the discretion of the Attorney General. The court's role in protecting the public interest is one of insuring that the government has not breached its duty to the public in consenting to the decree. The court is required to determine not whether a particular decree is the one that will best serve society, but whether the settlement is ''within the reaches of the public interest.'' More elaborate requirements might undermine the effectiveness of antitrust enforcement by consent decree.

Bechtel, 648 F.2d at 666 (emphasis added) (citations omitted).[13]

The proper test of the proposed Final Judgment, therefore, is not whether it is certain to eliminate every anticompetitive effect of a particular merger or to assure absolutely undiminished competition in the future. Court approval of a consent judgment must be subject to a standard more flexible and less strict than the standard the court would apply were it devising a remedy after an adjudication of liability. Microsoft, 56 F.3d at 1460–61 (''[W]hen a consent decree is brought to a district judge, because it is a settlement, there are no findings that the defendant has actually engaged in illegal practices. It is therefore inappropriate for the judge to measure the remedies in the decree as if they were fashioned after trial.'' (citation omitted)); see also *United States* v. *AT&T Corp.,* 552 F. Supp. 131, 151 (D.D.C. 1982) (''[A] proposed decree must be approved even if it falls short of the remedy the court would impose on its own, as long as it falls within the range of acceptability or is 'within the reaches of public interest.' '') (quoting Gillette, 406 F. Supp. at 716), aff'd sub nom. *Maryland* v. *United States,* 460 U.S. 1001 (1983); *United States* v. *Aclan Aluminum Ltd.,* 605 F. Supp. 619, 622 (W.D. Ky. 1985) (approving the consent judgment even though the court might have imposed a greater remedy had the matter been litigated).

The Court must evaluate the adequacy of the proposed decree as a remedy for the antitrust violations alleged in the Complaint, not for other supposed violations. The Tunney Act does not authorize the Court to ''construct [its] own hypothetical case and then evaluate the decree against that case.'' Microsoft, 56 F.3d at 1459. Because the ''court's authority to review the decree depends entirely on the government's exercising its prosecutorial discretion by bringing a case in the first place,'' it follows that ''the court is only authorized to review the decree itself,'' and not to ''effectively redraft the complaint'' to inquire into other matters that the United States did not pursue. Id. at 1459–60. The United States is entitled to ''due respect'' concerning its ''prediction as to the effect of proposed remedies, its preception of the market structure, and its view of the nature of the case.'' *United States* v. *Archer-Daniels-Midland Co.,* 272 F. Supp. 2d 1, 6 (D.D.C. 2003) (citing Microsoft, 56 F.3d at 1461).

public interest determination could have costs tens, if not hundreds, of millions of dollars in lost efficiencies from the transactions as a whole. In consent decrees requiring divestitures, it is also standard practice to include ''preservation of assets'' clauses in the decree and stipulation to ensure that the assets to be divested remain competitively viable. That practice was followed here. Proposed Final Judgments § VIII; Stipulations § V. In appropriate cases, particularly where a separate, distinct operating business is to be divested, ''hold separate'' provisions are also included. In the Proposed Final Judgments at issue here, no ''hold separate'' provisions were necessary or appropriate, as the divested assets are not of a type that could meaningfully be ''held separate.''

[11] The public interest determination can be made on the basis of the CISs and the United States' Response to Comments. The Tunney Act authorizes the court to use various procedures to gather additional information, 15 U.S.C. 16(f), but a court need not invoke them unless it believes that the information already available is insufficient to resolve any critical issues that the public comments may have raised. See H.R. Rep. No. 93–1463, 93d Cong., 2d Sess. 8–9 (1974), as reprinted in 1974 U.S.C.C.A.N. 6535, 6538–39.

[12] *Cf. United States* v. *Gillette Co.,* 406 F. Supp. 713, 716 (D. Mass. 1975) (recognizing it was not the court's duty to determine whether the proposed decree was the best settlement, because the parties, not the court, settle the dispute).

[13] Cf. BNS, 858 F.2d at 464 (holding that the court's ''ultimate authority under the [Tunney Act] is limited to approving or disapproving the consent decree''); Gillette, 406 F. Supp. at 716 (noting that the court is constrained to ''look at the overall picture not hypercritically, nor with a microscope, but with an artist's reducing glass''); see generally Microsoft, 56 F.3d at 1461 (discussing whether ''the remedies [obtained in the decree are] so inconsonant with the allegations charged as to fall outside of the 'reaches of the public interest' '').

In 2004, Congress amended provisions of the Tunney Act, but the amendments did not materially affect the scope or standard of review. Where pre-amendment the Act provided a list of factors a court ''may'' consider in making its public interest determination, post-amendment the court ''shall'' consider the listed factors. Compare 15 U.S.C. 16(e) (2004) with 15 U.S.C. 16(e)(1) (2006) (amended version). Of course, even before the amendment courts were unlikely to choose to ignore factors that were on the list, and thus of clear congressional interest, merely because the statute used ''may'' rather than ''shall.'' The amendment also slightly modified the list of factors. It added one new factor (whether the terms of the judgment are ambiguous, 15 U.S.C. 16(e)(1)(A), which the Court of Appeals had already made clear was appropriate to consider, Microsoft, 56 F.3d at 1461–62); modified a catch-all factor to limit its scope to competitive considerations; [14] and added ''upon competition in the relevant market or markets'' to the list of impacts to be considered, 15 U.S.C. 16(e)(1)(B), as one would expect in an antitrust case. As for procedure, the amendment added the unambiguous directive that ''[n]othing in this section shall be construed to require the court to conduct an evidentiary hearing or to require the court to permit anyone to intervene.'' 15 U.S.C. 16(e)(2).

In addition to amending the Tunney Act, Congress made findings. In particular, it found that ''it would misconstrue the meaning and Congressional intent in enacting the Tunney Act to limit the discretion of district courts to review antitrust consent judgments solely to determining whether entry of those consent judgments would make a 'mockery of the judicial function.' '' [15] That finding seems entirely correct. And, so far as we know, no court has ever construed the Tunney Act to limit judicial review solely to whether the proposed judgment would make a ''mockery of the judicial function.'' [16] In any event, Congress in 2004 did not change the applicable standard, but limited itself to a finding purporting to clarify its intent of 30 years ago—a finding that is not inconsistent with the case law's interpretation of the Tunney Act.

The purpose of the Tunney Act, both before and after amendment, is clear: courts must determine that a proposed decree is in the public interest before entering it, and must do so after the public has had an opportunity to comment and the government has responded to any comments. As part of that determination, a court should consider certain factors listed in the Act relating to the competitive impact of the judgment and whether it adequately remedies the harm alleged in the complaint. But the scope of a court's review is not unlimited: The Tunney Act does not permit a court to redraft the complaint, examine possible competitive harm the United States did not allege, or engage in a wide-ranging search for the relief that would best serve the public.

III. Summary of Public Comments and Responses

During the 60-day public comment period, the United States received comments from COMPTEL, ACTel, and the New York State Attorney General. Upon review, the United States believes that nothing in the comments warrants a change in the proposed Final Judgments or is sufficient to suggest that the proposed Final Judgments are not in the public interest. These comments, in large measure, do not address whether the proposed remedy adequately redresses the competitive harm alleged in the Complaints, but rather whether the United States should have brought a different much broader case. The comments do include some concerns relating to whether the proposed Final Judgments adequately remedy the alleged harms. The United States addresses these concerns below and explains how the remedy is appropriate.

A. ACTel

1. Summary of Comment

The Alliance for Competition in Telecommunications (''ACTel'') is a group whose members include CLECs and interexchange carriers (''IXC'') that buy Local Private Lines at wholesale from the merging companies,[17] and compete against the merging companies for retail business customers. On February 9, 2006, ACTel submitted a comment alleging that the proposed remedy ''cannot succeed'' and fails to meet the Tunney Act standard. After some discussion of that standard,[18] and a description of ACTel's view of the wholesale markets for Local Private Lines, ACTel criticizes the proposed Final Judgments. ACTel notes that whereas the Complaints allege harm to competition in the provision of Local Private Lines, the remedy is focused on the divestiture of (a) certain laterals to particular buildings, and (b) sufficient transport to connect those circuits to the network of the entity purchasing the divested lateral circuits. ACTel identifies what it claims are three ''deficiencies'' in the remedy that will prevent it from being effective.

First, ACTel notes that the proposed Final Judgements do not cover all buildings for which the mergers will reduce the number of Local Private Line competitors from ''2 to 1'' (*i.e.,* buildings where only the merging firms have last-mile connections). Relying on data purchased from a third party, ACTel contends that the number of buildings for which the United States seeks relief is at least two orders of magnitude less than the number of buildings it believes present a 2-to-1 problem. It thus contends that the ''Government's remedy does not include all buildings that the Complaint purports to cover,'' suggests that the ''Government needs to explain its methodology,'' and argues that ''[i]f the Proposed Final Judgment does not address *all* situations in which AT&T is

[14] The language was modified to read ''any other *competitive* considerations bearing upon the adequacy of such judgment *that the court deems necessary to a determination of whether the consent judgment is in the public interest.*'' 15 U.S.C. 16(e)(1)(A) (italics indicate new language).

[15] Antitrust Criminal Penalty Enhancement and Reform Act of 2004, Pub. L. No. 108–237, § 221(a)(1)(B), 118 Stat. 661, 668 (2004).

[16] ''[M]ockery of the judicial function'' echoes Microsoft's ''[a] decree * * * is a judicial act, and therefore the district judge is not obliged to accept one that, on its face and even after government explanation, appears to make a mockery of judicial power.'' Microsoft, 56 F.3d at 1462 (emphasis added). The Court of Appeals was, of course, not limiting Tunney Act review solely to whether a decree makes a ''mockery of judicial power.'' It explicitly stated that in a Tunney Act review, ''the court can and should inquire * * * into the purpose, meaning, and efficacy of the decree. If the decree is ambiguous, or the district judge can foresee difficulties in implementation, we would expect the court to insist that these matters be attended to. And certainly, if third parties contend that they would be positively injured by the decree, a district judge might well hesitate before assuming that the decree is appropriate.'' Id. at 1462. A comparison of the Tunney Act as amended, and the associated congressional findings, with Microsoft perhaps suggests why Senator Hatch, then Chairman of the Senate Judiciary Committee, said that ''this amendment essentially codifies existing case law.'' 150 Cong. Rec. S3610, at S3613 (daily ed. Apr. 2, 2004).

[17] ACTel Comment at 3 (attached hereto as Attachment 1). ACTel was formed in March 2005 by six competitive carriers ''to challenge the Verizon/MCI and SBC/AT&T mergers'' and was an active complainant in both the United States' and FCC's investigations of these transactions. Competitive Carriers Challenge Telecom Mergers (Mar. 15, 2005), available at *http://www.allianceforcompetition.com/newsroom/release/050315–1.php.*

[18] ACTel states that the public interest determination here ''will constitute the first significant application of the Tunney Act since Congress amended that statute in 2004.'' ACTel Comment at 4. However, since the effective date of the Tunney Act amendments—June 22, 2004—at least 12 antitrust consent decrees have been reviewed by courts, found to be in the public interest, and entered.

eliminated as the only facilities-based competitive alternative to SBC for loops, the court must withhold its approval of the settlements.'' [19]

Second, ACTel contends that the proposed Final Judgments are deficient because they address ''only the part of the Local Private Line that connects to a building, not the part of the Private Line that connects to a carrier's network.'' It argues that if the number of suppliers of the ''transport'' part of the network (the part of a circuit that interconnects carrier central offices) goes from two to one, customers of Local Private Lines will still be subject to competitive harm, and contends that the United States must look at transport on a ''segment by segment'' basis. In short, ACTel contends that the proposed remedy is ineffective because customers will ''still be subject to the '2 to 1' choke hold because the Government's remedy does not include transport (unless it is attendant to a divested loop for a building).'' [20]

ACTel's third alleged deficiency is that the remedy addresses only 2-to-1 situations, whereas it believes there are ''many 'anticompetitive effects' in Private Line situations beyond '2 to 1' loops.'' [21] In particular, it argues that 4-to-3 and 3-to-2 situations also create a competitive problem here, and suggests that the United States has done ''an about-face'' and engaged in a ''significant departure from established and documented procedures'' by not alleging a competitive problem in those instances.[22] Finally, ACTel argues that a purchaser of the divested assets, even if it is a ''viable, ongoing telecommunications business'' may not be an effective competitive substitute for AT&T and MCI at least in part because its network would not be as broad, or its customer base as ''robust.'' [23] ACTel concludes by suggesting alternate remedies to those contained in the proposed Final Judgments including divestiture of ''all redundant loop and transport circuits,'' releasing customers from their current contracts, and prohibiting the merged firms from raising prices.[24]

2. Response

Tunney Act review principally addresses the adequacy of the remedy, not the adequacy of the complaint.[25] Most of the issues ACTel raises, however, question the wisdom of the filed Complaints, and urge theories of competitive harm that the United States did not believe were supported by the evidence. Additionally, in a number of instances in which ACTel claims to be challenging the adequacy of the remedy, ACTel construes the Complaints far too broadly. For instance, ACTel misreads the Complaints as identifying a competitive problem in all 2-to-1 buildings. The allegations in the Complaints do not reach all such buildings, and therefore, whether the remedy addresses them is not a proper subject for Tunney Act review. In any event, the United States believes the proposed remedy is adequate to redress the likely competitive harm from the mergers.

a. Transport

In its investigation, the United States examined the extent of AT&T's local networks in SBC's territory, and MCI's local networks in Verizon's territory, which the acquired firms use to provide Local Private Line and related services. In order to analyze the competitive effects of the mergers, the United States also examined the other CLEC networks in each metropolitan area of overlap. Using compulsory process, the United States obtained highly-confidential maps of fiber-optic networks and information about ''on-net buildings'' [26] from more than two dozen different CLECs. The United States found that there were multiple CLECs with local networks in every metropolitan area under consideration. Those networks vary in their scope and reach, but several in each metropolitan area reach the highest volume locations, especially central offices with sizable demand. Moreover, CLECs typically continue to add new locations to their networks as demand warrants.[27]

Accordingly, the United States concluded that the mergers were unlikely to create a ''metropolitan area-wide'' competitive problem, or a competitive problem in the vast majority of buildings in any given metropolitan area.[28] Nevertheless, because there is considerable differentiation in the buildings reached by different carriers networks, particularly for end-user buildings, in a relatively small number of buildings the acquired company is the only alternative to the RBOC [29] for a last-mile connection. The competitive problem created by the mergers, therefore, involves this set of buildings.

As ACTel correctly points out, however, the relevant product that uses this connection or loop is Local Private Lines service (or value-added services that rely on Local Private Line). What the Complaints therefore allege is a likelihood of harm in the markets for Local Private Lines, or services that rely on Local Private Lines, due to a reduction from two to one in the number of providers of last-mile connections. In other words, the market is Local Private Line, but the merger-created bottleneck or competitive problem alleged in the Complaints is the last-mile connection.[30] In general, there is no such bottleneck for transport, nor do the Complaints allege a competitive problem specific to transport. Thus, contrary to ACTel's contention, there is no ''inconsistency'' between the Complaints and proposed Final Judgments in their treatment of transport nor are the proposed Final Judgments deficient because they address ''only the part of the Local Private Line that connects to a

[19] *Id.* at 12, 15.

[20] *Id.* at 21.

[21] *Id.*

[22] *Id.* at 23.

[23] *Id.* at 24.

[24] *Id.* at 25.

[25] *See, e.g.,* Microsoft, 56 F.3rd at 1459 (''Congress surely did not contemplate that the district judge would, by reformulating the issues, effectively redraft the complaint himself.''); *id.* (stating that the district judge may not ''reach beyond the complaint to evaluate claims that the government did not make''); BNS, 858 F.2d at 462–63 (The Tunney Act ''does not authorize a district court to base its public interest determination on antitrust concerns in markets other than those alleged in the government's complaint.'') Nothing in the 2004 Tunney Act amendments could be viewed as suggesting that the reviewing court should look beyond the allegations in the complaint in determining whether the proposed decree is in the public interest. Indeed, to do so could result in the court substituting its prosecutorial judgment for that of the United States. Were a court to reject a proposed decree on the grounds that it failed to address harm not alleged in the complaint, it would offer the United States what the Court of Appeals for the D.C. Circuit referred to as a ''difficult, perhaps Hobson's choice'': it would have to either redraft the complaint and pursue a case it believed had no merit, or else drop its case and allow conduct it believed to be anticompetitive to go unremedied. Microsoft, 56 F.3d at 1456.

[26] An ''on-net'' building is a building for which a carrier has built or acquired its own last-mile fiber-optic connection, connecting the building to its network. Complaints ¶ 16.

[27] The FCC reached a similar conclusion. See, e.g., FCC Orders ¶ 45 (''In many MSAs, some competitors appear to have more extensive networks than [AT&T/MCI]. We conclude, therefore, that there are existing competitors with local fiber networks that reasonably could provide wholesale special access in MSAs where [AT&T/MCI] now operates local facilities.'').

[28] Indeed, for the vast majority of buildings in a given metropolitan area the SBC or Verizon is the only firm with a last-mile connection to the building. Complaints ¶ 15. Accordingly, the merger results in no less of actual competitive options to that vast majority of buildings.

[29] The term ''RBOC'' refers to a regional Bell operating company, such as SBC or Verizon.

[30] Similarly, the proposed Final Judgments focus on divestiture of ''laterals'' and ''transport'' rather than Local Private Lines because, as ACTel acknowledges, Local Private Line is a product, not a specific asset. Any divestiture needs to identify specific assets, rather than ''products,'' in order to avoid the very ambiguity that would cause concern under the Tunney Act.

building,'' not the transport part.[31] It would be inappropriate to suggest that the remedy is inadequate because it does not address a competitive harm that the United States neither concluded was likely nor alleged in its Complaints.[32]

The divestiture remedy is focused on the assets that would be necessary to replace the competition lost in the buildings where harm was anticipated as a result of the mergers: those assets are the laterals to the specific buildings that likely would be subject to anticompetitive effects. As noted in the CIS, however, lateral's are of little use if they are not connected to a network. Therefore, the proposed Final Judgments also require the divestiture of IRUs for transport facilities sufficient to connect the divested laterals to locations mutually agreed upon by Defendants and the purchaser. This will ensure that the purchaser can connect the laterals to its network facilities and provide both Local Private Lines and any other telecommunications services that rely on Local Private Lines that a customer in the building may desire.

b. Omitted 2-to-1 Buildings

ACTel complains that the proposed Final Judgments do not cover all 2-2-buildings. However, it incorrectly suggests that it is ''impermissible by the express terms of the Complaint'' for the United States to have excluded certain 2-to-1 buildings because the Complaints allege harm in all 2-to-1 buildings. Nowhere do the Complaints state that there would be competitive harm in all 2-to-1 buildings, nor would the facts support such an allegation. One reason is that for some of the 2-to-1 buildings entry would be likely in response to a post-merger price increase. Indeed, the Complaints specifically list some of the factors governing whether a CLEC will build fiber to a particular building and state that ''entry may occur in response to a post-merger price increase in some of buildings where [AT&T or MCI] is the only connected CLEC.'' [33] Similarly, the CISs also discuss entry, and conclude that ''[w]hile entry may occur in some buildings where [AT&T or MCI] is the only CLEC present in response to a post-merger price increase, the conditions for entry are unlikely to be met in the hundreds of buildings that are the subject of the Complaint[s].'' [34] The Complaints did not allege, nor were intended to allege, harm in all 2-to-1 buildings; rather the ''subject of the Complaint[s]'' is the subset of buildings where harm was likely and that were identified in the proposed Final Judgments.

Ambiguity in the terms of a proposed judgment is a legitimate subject for consideration under the Tunney Act. 15 U.S.C. 16(e)(1)(A). ACTel contends that there is ambiguity ''due to discrepancy between the number of buildings the Proposed Final Judgment identifies and what publicly available data suggests in terms of the number of '2 to 1' loop buildings affected by the mergers.'' [35] This ''discrepancy,'' however, is not an ambiguity in the terms of the proposed Final Judgments. The proposed Final Judgments very clearly specify the buildings to be divested. It is true that although the Complaints allege competitive harm in only a subset of 2-to-1 buildings, they do not specifically list the buildings in that subset. However, the set of buildings as to which the United States believed there was sufficient evidence to support a conclusion of competitive harm, and which is the subject of its Complaints, is the set of buildings identified in the proposed Final Judgments filed simultaneously with the Complaints. Thus, the question of whether the United States should have sought relief in additional 2-to-1 buildings goes not to the adequacy of the remedy, but rather to the United States' conclusions about where the mergers might cause competitive harm, and it is therefore not a proper subject for Tunney Act consideration.[36]

In any event, the United States believes that divestitures of laterals to the set of buildings identified in the proposed Final Judgments are sufficient to remedy any competitive harm that otherwise would be likely to result from the mergers. In order to identify buildings where the merging firms were the only carriers with a last-mile connection (i.e., 2-to-1 buildings),[37] the United States sought and received, via compulsory process, ''on-net'' building lists from AT&T, MCI, and over 30 other CLECs and compared those lists.[38] The United States then eliminated from the resulting list of 2-to-1 buildings those buildings where circumstances suggested that there was no competitive problem. For instance, because where there is no likely customer, there probably is no harm, the United States eliminated vacant buildings, buildings where a subsidiary of the merging firms was the only customer, and buildings with zero current demand for Local Private Line or related services.[39]

[31] Indeed, contrary to ACTel's assertion (ACTel Comment at 16), the Complaints never even use the word ''transport.''

[32] ACTel argues ''the Government must look at transport on a 'segment by segment' basis rather than via area-wide analysis.'' Indeed, the United States effectively did just that. Although the United States' investigation revealed that the vast majority of interoffice transport routes where AT&T or MCI is present would also have competitive alternatives post-merger, the United States, like ACTel, was concerned about any reduction of competitive options from two to one that could potentially result. Because an interoffice transport circuit is essentially a circuit to a central office location, the United States chose to treat ''central offices'' as any other building and analyzed Local Private Line connections to them along with all other buildings connected to AT&T's and MCI's networks. Ultimately, the United States identified only two SBC central offices and three Verizon central offices where AT&T or MCI, respectively, was the only connected CLEC and where entry was unlikely. Consistent with the United States' approach to other 2-to-1 buildings where entry was unlikely, these five central offices are included in the proposed remedy and thus, to the extent that there is a competitive problem for the small number of transport routes from these central offices, the proposed Final Judgments will remedy it.

[33] Complaints ¶ 29. ACTel cites the Complaints on entry, quoting the language ''entry is unlikely to eliminate the competitive harm that would likely result from the proposed merger.'' ACTel Comment at 15. That language recognizes that for the hundreds of buildings identified in the proposed Final Judgments entry is indeed unlikely, and a remedy is required. But ACTel omits the preceding language that acknowledges that for some of the 2-to-1 buildings, entry may well occur. See Complaints ¶ 29. For these buildings, a remedy is unnecessary.

[34] CISs at 8.

[35] ACTel Comment at 12.

[36] Ultimately, the United States makes two kinds of judgments. The first is whether and where a particular merger is likely to cause competitive harm; the second is whether a remedy is likely to be adequate to remedy the identified harm. The first is not a proper subject for Tunney Act review, as it would require the Court to substitute its prosecutorial judgment for that of the United States; the second is indeed a proper subject for such review, as intended by Congress. The United States' as to which 2-to-1 buildings pose a competitive problem and therefore require a remedy is fundamentally a judgment of the first kind, not the second.

[37] The United States' reasons for treating differently buildings where at least two carriers would have a last-mile connection post-merger, is discussed below. See infra section III.A.2.c.

[38] In its comment, ACTel suggests that the number of 2-to-1 buildings in each metropolitan area is in the thousands. Such numbers are absurdly high. For instance, ACTel's estimate that there are 6318 2-to-1 buildings in Los Angeles exceeds AT&T total number of on-net buildings in that metropolitan area (much less 2-to-1 buildings) by more than twenty times. Contrary to ACTel's assertions that the number of 2-to-1 buildings in each metropolitan area is in the thousand buildings, the United States found that the total number of 2-to-1 buildings in all the alleged metropolitan areas combined barely reached 1,000 for the Verizon and SBC regions respectively.

[39] Of course, it is hypothetically possible that a building in this category could have a competitive problem, for instance, if post-merger a new customer moved into a vacant building. However, Section 7 does not look to some hypothetical possibility of harm, but rather to a likelihood of harm. See, e.g., *New York* v. *Kraft General Foods, Inc.,* 926 F. Supp. 321, 358–59 (S.D.N.Y. 1995) (''Section 7 deals in 'probability,' not 'ephemeral possibilities.' '') (quoting *United States* v. *Marine Bancorp., Inc.,* 418 U.S. 602, 622–623 (1974))); Fruehauf Corp. v. F.T.C., 603 F.2d 345, 351 (2d Cir. 1979) (''[T]here must be 'the reasonable probability'

Continued

In addition, because entry is likely to occur in response to a price increase for some set of the 2-to-1 buildings, the United States considered the prospects for entry for each of the 2-to-1 buildings. As noted in the Complaints, two of the most important factors in determining whether entry is likely in a given building is the proximity of competitive fiber to that building, and the capacity required by the building.[40] The United States sought and received through compulsory process the fiber maps of more than two dozen CLECs. Using mapping software, the United States compiled ''master'' electronic maps of each of the overlapping metropolitan areas. For each of the hundreds of buildings in question, the United States identified the distance to the nearest competitive fiber and compared that with demand data for each of the buildings. From this, the United States was able to make judgments about the likelihood of entry in each building. The buildings it chose to include in the proposed Final Judgments are those as to which the United States believed it could show that entry was unlikely, and therefore that competitive harm would be likely. Accordingly, the divestitures required by the proposed Final Judgments reflect the set of 2-to-1 buildings where competitive harm was likely, and should be adequate to remedy the mergers' likely anticompetitive effects.

c. Anticompetitive Effects Beyond 2-to-1 Loops

ACTel alleges that the proposed remedy does not fix the ''many 'anticompetitive effects' in Private Line situations beyond '2 to 1' loops''[41] such as buildings where the number of providers would go from four to three to two. The Complaints, however, do not allege a competitive problem as a result of reducing the number of competitors serving a building from four to three, or three to two.[42] Indeed, ACTel acknowledges this, suggesting that the United States has done ''an about-face'' by not alleging a competitive problem in those instances in its Complaints. Because the United States did not conclude that there was likely to be a competitive problem in 4-to-3 or 3-to-2 buildings, there is no reason to have included such buildings in the proposed remedy.

In many markets, a merger reducing the number of competitors from three to two or four to three is a competitive problem and the United States does not hesitate to bring such cases. To conclude, however, that a merger is anticompetitive simply because the number of competitors is reduced from, e.g., three to two, is incorrect. Many other considerations relating to market structure are also relevant. Before coming to a judgment on the competitive effect of a merger, the United states evaluates whether coordinated or unilateral effects are likely,[43] whether entry likely will occur, and whether a merger will generate efficiencies.[44] Here, given the particular structure of the marketplace, in looking at buildings where the number of competitors went from three to two or four to three, the United States was unable to conclude that the mergers would significantly increase the risks of coordinated interaction. Moreover, largely because the merging firms were not especially close substitutes, the evidence did not support a finding of likely unilateral anticompetitive effects in these buildings. Finally, the fact that at least two CLECs has added the buildings in question to their networks suggested that the characteristics of the buildings (e.g., location, capacity demand) made them susceptible to entry—significantly more so than the 2-to-1 buildings.[45] Thus, after almost nine months of analysis, and consideration of millions of pages of material and hundreds of interviews, the United States determined that the evidence did not support alleging a competitive problem in the 3-to-2 or 4-to-3 buildings in the SBC and Verizon territories; the likely competitive problem is limited to the provision of Local Private Line and related services in certain 2-to-1 buildings. That is the only competitive harm alleged in the Complaints, and the only harm that the proposed Final Judgments properly remedy.[46]

d. Divestiture Purchaser

ACTel does raise one point that goes directly to the adequacy of the proposed remedy. It argues that a purchaser of the divested assets, even if it is a ''viable, ongoing telecommunications business,'' may not be an effective competitive substitute for AT&T and MCI at least, in part, because its network would not be as broad, nor its customer base as ''robust.'' It is, indeed, important for the success of the proposed remedy that the divestiture buyer be able to replace the competition that might otherwise be lost as a result of the merger. For that reason, the proposed Final Judgments require that the purchaser, and terms of the purchase, be subject to the United States' approval. As the CISs note, in scrutinizing the proposed purchaser(s), ''the United States will be particularly focused on the purchaser's ability to be a viable competitor in offering Local Private Lines on both a retail and/or wholesale basis.'' CISs at 9.

In each metropolitan area under consideration there are at least several

of a substantial impairment of competition to render a merger illegal under § 7. A 'mere possibility' will not suffice.'') (citations omitted).

[40] Complaints ¶¶ 27–28. The closer a building is to a competitor's fiber, the less it is likely to cost that competitor to install additional fiber to reach that building (since typically a major component of the cost of installing fiber is the cost of digging up city streets to lay new fiber-optic cable and that cost increases with distance). The larger the demand for capacity in a building, the greater the expected revenues. The decision of a carrier whether to enter a building often turns on the extent to which the expected revenue exceeds the construction cost. *See also* CISs at 8.

[41] ACTel Comment at 21.

[42] ACTel's comment incorrectly cites the Complaints. It alleges that ''according to the Complaint AT&T and MCI are the most significant competitors for SBC and Verizon,'' ACTel Comment at 21, and state that ''AT&T and MCI are the most significant and effective competitors to the acquiring companies,'' *Id.* at 23. In both cases it cites to paragraph 17 of the Complaints. Paragraph 17, however, makes no such allegations. Instead, it makes the more limited allegations that AT&T and MCI are, respectively ''among the leading CLECs'' in the number of buildings connected to their networks, and that for hundreds of buildings, the merging firms are the only two carriers that own or control a direct building connection.

[43] United States Department of Justice & Federal Trade Commission, Horizontal Merger Guidelines, (rev. Apr. 8, 1997) § 2, available at *http://www.usdoj.gov/atr/public/guidelines/hmg.htm.*

[44] Id. §§ 3, 4. Thus, ACTel's contention that the United States' decision to allege only a problem in certain 2-to-1 buildings is an ''about-face'' and represents a ''significant departure from established and documented procedures'' is without merit. Merger analysis is a complex, fact-specific, case-by-case undertaking and one which cannot simply be resolved by looking only at the change in concentration or the number of remaining competitors in a market. See, e.g., id. § 0 (''Because the specific standards set forth in the Guidelines must be applied to a broad range of possible factual circumstances, mechanical application of those standards may provide misleading answers to the economic questions raised under the antitrust laws.''); see also *United States* v. *Continental Can Co.,* 378 U.S. 441, 458 (1964) (''Market shares are the primary indicia of market power but a judgment under § 7 is not to be made by any single qualitative or quantitative test. The merger must be viewed functionally in the context of the particular market involved, its structure, history and probable future.'').

[45] In arguing that the mergers present competitive problems in Local Private Lines beyond the limited number of 2-to-1 situations alleged by the United States, ACTel relies heavily on information it and its members submitted to the Department and FCC. The Department devoted significant time to analyzing this date. But based on this analysis, as well its consideration of the large volumes of other information gathered during the course of the investigation, the Department could not draw the same conclusions as ACTel seeks to draw. Nor, apparently, could the FCC. See. e.g., FCC Orders ¶ 46.

[46] The FCC, which conducted its own in-depth analysis of the transactions, reached a consistent conclusion. FCC Orders ¶ 40 (''We find that the terms of the consent decree should adequately remedy any likely anticompetitive effects in the provision of Type I wholesale special access services.'').

CLECs with extensive networks, including, e.g., switches, fiber, dozens or hundreds of ''on-net'' locations. Those carriers are already effective competitors in the metropolitan area. Where those carriers are not currently effective is the specific buildings here the acquired firm has fiber and they do not. The proposed remedy, by providing another carrier with fiber-optic capacity to these buildings, will enable it to replace the competition that could be lost as a result of the merger. Even if the purchaser's pre-existing network is not as extensive as the acquired firm's, as long as it has all the assets necessary to be able to reliably provide service to the buildings in question, there is little reason to believe that the purchaser would likely be a less aggressive, effective competitor for those buildings. In short, the United States believes that there are potential purchasers who could effectively use the assets to compete, and intends to exercise its approval rights to approve only such purchasers.[47]

(e) Alternate Remedies

Because the United States' proposed remedy adequately redresses the competitive harm alleged in its Complaints, there is no need to consider the remedies proposed by ACTel in its comment. Moreover, some of its proposed remedies could raise difficult issues.[48] That the proposed Final Judgments do not include ACTel's suggested remedies in no way suggests that they fail to fall within the reaches of the public interest.

B. COMPTEL

1. Summary of Comment

COMPTEL, a trade association of communications providers that compete against the merging firms and also purchase wholesale services from them, submitted a comment on February 13, 2006, objecting to the proposed Final Judgments because, in its view, they ''do not replace the competition lost from the elimination of AT&T and MCI as the two most significant competitors to SBC and Verizon.'' [49] COMPTEL's comment begins by summarizing, and criticizing, the United States' Complaints. In particular, it contends that the geographic market alleged by the United States is too narrow and ''cannot plausibly be considered to be as small as an individual building.'' [50] Moreover, it suggests that there are barriers to entry in addition to those alleged in the United States' Complaints, and that barriers to entry apply not just to buildings, but to entry into a metropolitan area as sell. COMPTEL suggests that a ''post-merger price increase in the metropolitan area is just as much (actually more) of a danger than the threat of building-specific price increases'' and contends that the proposed remedy would not prevent those increases.[51]

COMPTEL's comment also addresses the proposed remedy specifically, arguing that it is inconsistent with the United States' merger and remedy guidelines. It suggests that a divestiture of laterals to only certain 2-to-1 buildings is inadequate and that, instead, the merged firms should be required to divest ''all of the AT&T and MCI network assets that serve each metropolitan area.'' Next, COMPTEL contends that the proposed remedy is faulty because it requires only the divestiture of currently unused fiber-optic strands to the buildings in question, and without a guaranteed customer or revenue stream, a proposed purchaser would be unwilling to commit the capital to purchase the assets and install equipment needed to ''light'' the fiber-optic strands in questions and make them ready to use. Third, COMPTEL argues that the form of the proposed divestitures—10-year IRUs—is inadequate to resolve the competitive concerns. Finally, COMPTEL suggests that the remedy is not ''clear and enforceable'' because some terms of the divestiture (pricing, splice points, and transport) are left to negotiation between the merged firms and divestiture buyers.

The final section of COMPTEL's comment complains that certain RBOC contracting practices are serving as a barrier to entry, and that the combined effect of the mergers and the contracting practices will be to enhance the risks of anticompetitive coordination between the two surviving firms. COMPTEL suggests that the proposed remedy would compound this problem if AT&T (as the merged SBC/AT&T is now known) were to buy the divested assets from Verizon and vice versa. COMPTEL argues in favor of an alternate remedy that would require the merged firms to divest all the acquired companies' ''in-region assets''—including customers and employees—and would also eliminate certain contracting practices.

2. Response

Like ACTel's comment, some of COMPTEL's comment criticizes the United States' Complaints rather than the adequacy of the remedy for the harm alleged in the Complaints. In particular, COMPTEL criticizes the Complaints' geographic market definition as well as the decision not to include any allegations of ''metropolitan-area-wide harm,'' harm due to coordinated interaction between the two merged firms, or harm due to RBOC contracting practices. However, the proposed Final Judgments should not be viewed as inadequate because they fail to address competitive harm not alleged in the Complaints. COMPTEL also raises concerns that do go to whether the proposed remedy is sufficient to rectify the competitive harm alleged in the Complaints. However, the United States believes that the proposed remedy will adequately redress the alleged competitive harm and will do so in a manner that avoids disruptions or dislocations of the ultimate retail enterprise customers whose businesses depend on reliable telecommunications service.

a. Metropolitan Area Harm

COMPTEL contends that the proper geographic market definition cannot be as small as an individual building. It suggests that the market is much broader, and that the harm the mergers cause is likely to be felt throughout the metropolitan area, rather than just in the specific buildings identified in the United States' papers. This concern is, primarily, a challenge to the United States' Complaints rather than the proposed remedy and, as previously noted, Tunney Act review properly addresses the proposed remedy, not the correctness of the Complaints' allegations of geographic market or competitive harm.

In any event, the market definition is correct, and markets can be as narrow as the individual building.[52] As COMPTEL

[47] This does not mean that only a carrier with an extensive pre-existing network could be acceptable as a purchaser. Depending on the assets the carrier is purchasing from the merged firm in the particular metropolitan area, its plans to build or acquire other assets, its existing customer base, its business plan, etc., an established carrier without a pre-existing network in the metropolitan area in question might also be acceptable as a purchaser.

[48] For instance, their proposal that the merged firm divest all duplicative ''loop and transport circuits'' could cause significant customer disruptions as discussed further, see infra Sections III.B.2.b, III.B.2.c.i.

[49] COMPTEL Comment at 2 (attached hereto as Attachment 2). COMPTEL also filed a Motion to Intervene on February 8, 2006, raising essentially the same concerns regarding the proposed Final Judgments as are expressed in its comments.

[50] *Id.* at 8.

[51] *Id.* at 12.

[52] The FCC also concluded that the geographic market is the individual building. FCC Orders ¶ 28 (stating that ''the relevant geographic market for wholesale special access services is a particular customer's location''). It also is worth noting that even the statement of Dr. Farrell, submitted on behalf of Global Crossing in the FCC's SBC/AT&T

Continued

notes, the United States defines markets primarily from the demand perspective, i.e., what options face the customer.[53] Customers for Local Private Lines can select only from the set of providers that offer service to the particular building those customers need to connect. Although RBOC networks are typically ubiquitous and reach virtually every building in their franchised territories, CLECs, including AT&T and MCI, directly connect to only a small minority of buildings. Because the set of providers varies from building to building, and because a customer for a Local Private Line cannot substitute a circuit to a different building to supply the one it needs to connect, the relevant geographic market for Local Private Lines can indeed be the individual building.[54]

Regardless, however, of whether the appropriate geographic market here is as narrow as the individual building or as broad as the metropolitan area,[55] the competitive harm likely to result from the proposed merger is limited to a set of 2-to-1 buildings, and that is what the Complaints allege.[56] In the vast majority of buildings, the RBOC is the only firm owning a last-mile connection, and the merger does not change this. For most of the small percentage of buildings where AT&T or MCI is present as a competitive option, either another CLEC is also present or circumstances are such that entry would be likely in response to a price increase. Therefore, for these buildings also the evidence is insufficient to establish that the merger will likely lead to competitive harm. Only in the set of 2-to-1 buildings for which the United States sought a remedy did it conclude that the evidence was sufficient to show that the merger would likely lead to competitive harm. COMPTEL's contention that the remedy is insufficient because it does not address the concern that the mergers will lead to price increases throughout all the buildings in a metropolitan area is therefore without merit: The evidence did not show that such increases were likely,[57] the United States did not allege such increases, and therefore there was no reason to seek relief to prevent such increases.

b. Divestiture of Specific Assets Versus an Operating Business

COMPTEL complains that the proposed remedy is inadequate to resolve the harm alleged in the Complaints because it achieves the divestiture of only specific assets (laterals to certain 2-to-1 buildings), rather than an entire operating business. It contends that this is in violation of the United States' remedy guidelines.[58] COMPTEL's position, however, than an entire operating business needs to be divested here appears largely based on its erroneous assertion that the likely competitive harm extends beyond a limited set of 2-to-1 buildings. To the extent that COMPTEL's argument is that an entire operating business needs to be divested in order to resolve the competitive harm in the specific 2-to-1 buildings identified in the United States' papers, that contention is meritless.

The purpose of any remedy is to avoid harm to competition that would otherwise be created by the merger. Here, AT&T and MCI are being eliminated as independent competitors in the respective RBOC regions for Local Private Lines and value-added services that rely on Local Private Lines. But the competitive problem is not a dearth of providers of these services in the specified metropolitan areas; indeed, each metropolitan area in question has several competitive providers of Local Private Lines and value-added services that rely on Local Private Lines. The problem here is there are some buildings in each metropolitan area to which AT&T or MCI can offer fully facilities-based Local Private Line and related services but that to which no other CLEC can, or would be likely to, offer such services post-merger. An effective remedy in this instance, therefore, does not necessitate creating an entirely new competitor offering Local Private Line and related services in each metropolitan area, but rather can be limited to a divestiture that would allow an existing carrier to provide fully facilities-based Local Private Line and related services to the particular set of buildings in which the merger would otherwise be likely to harm competition.[59] Accordingly, a remedy that gives an already viable CLEC the fiber-optic capacity to serve the buildings in question on acceptable

merger proceeding and attached to COMPTEL's comment as Exhibit E, recognizes that markets as narrow as individual buildings would be an appropriate way to analyze the geographic markets here. *See* Statement of Joseph Farrell ¶¶ 10–14 (Apr. 25, 2005).

[53] COMPTEL Comment at 10; *Horizontal Merger Guidelines* § 1.0.

[54] That a customer might need Local Private Lines to multiple locations does not in itself change this analysis. For instance, a customer's need for connections to three locations within a given metropolitan area does not necessarily mean the geographic market is the metropolitan area. The customer may simply be an active purchaser in three different markets. In fact, wholesale customers—such as those that constitute COMPTEL—often will purchase from multiple providers of Local Private Lines in a given metropolitan area, relying on the RBOC for the majority of their circuits, but purchasing from lower priced CLECs for the locations to which the CLECs can provide service. The fact that the wholesale customers may have ''master service agreements'' with carriers that cover a whole metropolitan area and specify the terms under which circuits are purchased does not change the fact that their competitive alternatives (and hence, prices) vary by building, and they may (and often do) choose to purchase circuits on a building-by-building basis.

[55] Because there are also some facts that suggest broader markets, the United States' Complaints acknowledge that the geographic market may be as broad as the metropolitan area. Nevertheless, if the market is as broad as the metropolitan area, then the market is highly geographically differentiated, with different carriers able to reach very different sets of locations and buildings within the area.

[56] See, e.g., Complaints ¶ 25 (alleging that the merging parties ''are the only two carriers that own or control a Local Private Line connection to many buildings in each region. The merger would, therefore, effectively eliminate competition for facilities-based Local Private Line service to those buildings'') (emphasis added); see also CISs at 10 (''[T]here are numerous buildings where [AT&T or MCI] is the only CLEC with a last-mile connection. It is the decreased competition in the provision of these last-mile connections to buildings where [AT&T or MCI] is the only CLEC that creates the harm alleged in the Complaint * * *. [D]ivesting these last-mile connections will restore the lost facilities-based competition.'').

[57] As COMPTEL notes, often a particular carrier's default pricing for Local Private Lines covers an entire metropolitan area. However, given that in each metropolitan area in question, AT&T or MCI were each only one of multiple CLECs with local networks and typically controlled no more than a small minority of CLEC on-net connections, the evidence did not show that elimination of AT&T or MCI as an independent competitor would lead to ''metropolitan area-wide'' anticompetitive price effects; the likely anticompetitive effect could be no broader than certain individual buildings.

[58] COMPTEL Comment at 14; see U.S. Dep't. of Justice, Antitrust Div., Antitrust Division Policy Guide to Merger Remedies, § I (Oct. 2004) (''Remedy Guide'') available at *http://www.usdoj.gov/atr/public/guidelines/205108.pdf.* (''This Guide is a policy document, not a practice handbook. It is not a compendium of decree provisions, and it does not list or give 'best practices' or the particular language or provisions that should be included in any given decree.''). Although the Remedy Guide is not binding, the proposed remedy here is entirely consistent with the Remedy Guide. As the Remedy Guide notes, the fact that a provision was included in prior settlements does not make it necessarily appropriate for new ones; each matter must be evaluated on a case-by-case basis. Id.

[59] *See, e.g., Remedy Guide* § III.C.2 (''Divestiture of Less than an Existing Business Entity Also May Be Considered When Certain of the Entity's Assets Are Already in the Possession of, or Readily Obtainable in a Competitive Market by, the Potential Purchaser.''). Here, essentially all the assets necessary to compete in the problematic buildings are already in the hands of, or readily obtainable by, numerous potential purchasers—except the fiber-optic connections to those buildings. For recent cases in which the United States has required divestiture of only certain assets rather than an entire operating business, see *United States* v. *Cal Dive Int'l, Inc.,* No. 1:05CV02041 (EGS) (D.D.C. Jan. 12, 2006) (order entering final judgment requiring divestiture of two vessels and a saturation diving system), available at *http://www.usdoj.gov/atr/cases/f213100/213177.htm*; *United States* v. *Cingular Wireless Corp.,* No. 1:04CV01850 (RBW) (D.D.C. Mar. 14, 2006) (order entering final judgment requiring, in certain markets, divestiture of wireless spectrum only), available at *http://www.usdoj.gov/atr/cases/f208000/208093.htm.*

terms resolves the competitive harm. A divestiture of an entire ''operating business'' is unnecessary.[60] The only question is whether the particular assets that the divestiture buyer must receive under the proposed Final Judgments, and the terms by which those assets are conveyed, are sufficient to allow the buyer to compete effectively in the buildings in question. As discussed further below, the United States believes that the proposed Final Judgments adequately resolve these issues.

c. Concerns Regarding the Assets To Be Divested

COMPTEL contends that the divestiture of unused capacity to the buildings in question in the form of ten-year IRUs is inadequate to resolve the competitive concerns alleged in the Complaints. This raises several separate but related issues regarding the proposed remedy: (a) Whether it is sufficient to divest fiber-optic capacity (as opposed to also divesting customers); (b) whether it is sufficient to divest ''unused'' capacity, i.e., ''unlit'' fibers; (c) whether a divestiture in the form of an IRU, instead of ownership, is sufficient, and (d) whether ten years is a sufficiently long IRU term. The United States considered each of these issues in its negotiation of the remedy. Ultimately, the United States concluded that the provisions of the proposed Final Judgments are sufficient to redress the competitive harm. Events since the filing of the proposed Final Judgments have helped confirm the United States' judgment, and should serve to reassure the Court as to the adequacy of the proposed remedy.

As a result of the proposed mergers, customers for Local Private Line and related services to certain buildings will lose their only alternative to SBC or Verizon. The purpose of the divestiture remedy is to ensure that if and when those customers seek a provider for the relevant services, another competitive carrier will be able to supply them. That purpose will be achieved if another carrier acquires sufficient AT&T or MCI assets to service the buildings in question. However, another carrier will only purchase the divested assets if they present a viable business opportunity. Therefore, the divestiture package must be one a carrier would be willing to buy. COMPTEL's criticisms of the proposed divestiture properly address whether any buyer would be willing to purchase and operate the assets under the proposed terms (e.g., ''unlit'' fibers, without customers, on an IRU basis, for only ten years).

The United States believes that the proposed terms are adequate to secure a viable buyer for the assets. Since the United States agreed to the divestiture terms, the divestiture process itself has helped to validate their adequacy. Both AT&T and Verizon are well into the process of auctioning the divestiture assets in question.[61] Affidavits that both have filed with the United States pursuant to Section IV(B) of the Stipulations and Section IX of the proposed Final Judgments indicate that there has been substantial interest in the divestiture assets: multiple carriers have submitted proposals for some, or all, of the AT&T and MCI assets. The bids cover every metropolitan area identified in the proposed Final Judgments. In the case of AT&T (which began the divestiture process earlier than did Verizon), definitive agreements have already been reached with three different well-established carriers that would cover divestiture of all the assets in question.[62] That several CLECs have bid to purchase and operate the assets, and the AT&T has already been able to reach definitive agreements to divest all its required assets, should help allay any concerns about whether the terms of the proposed divestiture are sufficient to attract viable buyers.[63]

(i) Capacity Without Customers

As COMPTEL has noted, the United States often requires the divestiture of customers in antitrust remedies.[64] Nevertheless, such a divestiture is not always necessary or appropriate. Here, because there are multiple providers of Local Private Line and related services in each metropolitan area, the set of divestiture assets could be relatively narrow: a purchaser could serve the potentially problematic buildings simply by acquiring ''last-mile'' fiber-optic capacity connected to its local network. Because fiber-optic capacity will be sold to an established CLEC, there is little concern that the purchaser would not be competitively viable without also receiving customer contracts. A divestiture of customers would be necessary or appropriate in this case only if no adequate purchaser were willing to take on the assets in the absence of some sort of guaranteed revenue stream. From its investigation, the United States concluded that purchasers would be willing to take on the assets, even without customers, on the assumption that they would be able to compete for, an and win, customers over time in the buildings at issue. The fact that multiple CLECVs—including members of COMPTEL—submitted bids for these assets (and, in AT&T's case, have agreed to purchase the assets) helps confirm this.[65]

(ii) Unused Capacity Versus ''Lit'' Fibers

COMPTEL correctly notes that purchasers of the divested assets will receive unused capacity to the point of entry of each building, and, in order to begin serving customers, would have to invest some capital to gain building entrance and activate (''light'') the fibers. COMPTEL's analogy to the cost of constructing entirely new ''last-mile'' connections, however, and its

[60] Divestiture of an entire ''operating business'' or ''business unit'' is not only unnecessary here, but also impractical. Neither AT&T nor MCI have separate, easily severable ''business units'' that operate the Local Private Line business is the metropolitan areas in question. The manner in which the respective corporations are organized would make it very difficult to implement an effective divestiture of an entire ''operating business'' here. Moreover, such a divestiture could cause substantial customer disruption. See infra Section III.B.2.c.i.

[61] In order to secure a prompt remedy, the proposed Final Judgments require a divestiture within 120 days after the closing of the respective acquisitions, or within five (5) days after notice of the entry of final judgment by the Court, whichever is later. Proposed Final Judgments § IV(A).

[62] On February 20, 2006, AT&T entered into definitive agreements to divest the assets in Los Angeles and Chicago to one carrier, and the assets in Detroit, Hartford, Kansas City, Milwaukee, San Francisco, and St. Louis to another. On February 21, 2006, AT&T entered into a definitive agreement to divest the San Diego, Dallas, and Indianapolis assets to a third carrier. The United States has not yet determined whether to approve these purchases, pursuant to Section IV(A) of the Stipulation and Section VI(C) of the proposed Final Judgment.

[63] If the United States is wrong about whether the terms of the proposed divestiture are attractive enough to prompt a carrier to purchase the assets in any given metropolitan area, then after both the defendant(s) and trustee have failed to sell the assets, the trustee will file a report with the Court, the United States will make recommendations, and the Court ''shall enter such orders as it shall deem appropriate to carry out the purpose of the Final Judgment.'' Proposed Final Judgments § V.G. Such orders could alter the terms of the divestitures, or the nature of the assets, in such a way as to make the divestiture viable.

[64] *See, e.g.,* Remedy Guide § III.B (''In markets where an installed base of customers is required in order to operate at an effective scale, the divested assets should either convey an installed base of customers to the purchaser or quickly enable the purchaser to obtain an installed customer base.'')

[65] In this instance, a divestiture of customers might cause substantial disruption and complication—far more than in the ordinary antitrust settlement. Among other things, shifting a portion of a customer's telecommunications service risks outages, something particularly worrisome given the extent to which many retail enterprises depend on reliable telecommunications service. Had the United States sought to include a customer divestiture as part of the proposed remedies, it could well have run afoul of the Tunney Act's concern that the proposed remedy not adversely affect third parties. 15 U.S.C. 16(e)(1)(B) (requiring court to consider the impact of entry of the judgment ''upon the public generally''), see also Microsoft, 56 F.3d at 1462 (suggesting the Tunney Act analysis should consider whether ''third parties * * * would be positively injured by the decree'').

contention that these entrance and activation costs would prevent the remedy from being effective, are misplaced.

Although costs vary widely, the cost of gaining building entrance and activating fibers is typically a small fraction of the cost of constructing an entirely new ''last-mile'' connection often an order of magnitude less. Optronics equipment (equipment to light fiber) may not be cheap, but its still typically does not cost anywhere near as much as digging up city streets and laying new fiber. Moreover, whereas most of the cost of a new ''last-mile'' connection is sunk (i.e., it cannot be recouped once committed), much of the cost of optronics equipment is not generally sunk because the carrier can remove the equipment and use it elsewhere if it is no longer needed in its original location. Accordingly, the evidence gathered by the United States revealed that whereas carriers do not typically ''build out'' (i.e., build a new last-mile connection) to a customer without a relatively large guaranteed revenue commitment, they typically do light fiber and negotiate entrance to buildings connected to their network with unlit fiber if they are able to secure a customer of even modest capacity needs.

As COMPTEL suggests, for each building in question, the buyer of the divested assets may not negotiate a building entrance agreement or activate a fiber lateral until it has secured a customer in the building. But that does not negate the effectiveness of the remedy. The buyer of the divested assets can bid to supply Local Private Line and related services to the building in question, and if it prevails, negotiate building entrance and activate the fiber. The CLECs who have bid for the assets in all likelihood plan to do exactly that.[66] Customers for Local Private Line and related services will thereby have the benefits of competition, even if the divestiture purchaser ultimately does not win a customer contract, or ''light'' the fiber in their particular building.

(iii) IRU Versus Ownership

COMPTEL characterizes the form of the divestiture as a ''lease'' and suggests that it will be ineffective because it is not full ownership. Although COMPTEL is correct in that the remedy does not require transfer of full ownership, IRUs, which carry broader rights than typical leases, are commonly used in the industry and often viewed as almost indistinguishable from ownership. In fact, many CLECs' metropolitan area networks—including some of those of pre-merger AT&T—are constructed largely from IRU fiber rather than owned fiber. In its investigation, the United States did not uncover any significant evidence suggesting that conveying laterals in the form of IRUs would undermine the effectiveness of the remedy.

(iv) Ten-Year Duration

COMPTEL complains that the required minimum term of the IRU—ten years—is ''relatively short'' and will impair the effectiveness of the remedy. The United States disagrees. Retail agreements for Local Private Line and related services are virtually always much shorter than ten years; typically they are no more than two or three years. The fact that the IRUs are for ten years should not impair the ability of the divestiture purchaser to compete except, perhaps, near the end of the ten-year term. At that point, it is impossible to predict what the competitive landscape will look like, especially in the rapidly changing telecommunications industry. It is for that reason that the United States' consent decrees—including those proposed here—do not extend beyond ten years. The United States cannot, with confidence, predict whether the mergers would continue to cause anticompetitive harm beyond ten years in the future, as technological or other changes could substantially reshape the industry. Therefore, the remedy cannot be faulted for not extending beyond ten years.[67]

(v) Negotiable Terms

COMPTEL suggests that the remedy is not ''clear and enforceable'' because some terms of the divestiture (pricing, splice points, and transport) are left to negotiation between the merged firm and divestiture buyer. In any divestiture, however, many of the terms need to be negotiated between the seller and buyer. Indeed, the United States never specifies a purchase price in its settlements. The requirements of the proposed Final Judgments here are ''clear and enforceable'': the merged firms must divest laterals to more than 700 specific addresses and sufficient transport to connect those laterals to the buyer's network. The United States has no reason to believe that the negotiation of a commercial, arms-length agreement between the merged firms and divestiture buyers are likely to lead to any unusual problems.[68] In fact, the evidence to date is otherwise: AT&T has already submitted to the United States for approval definitive agreements for the divestitures required by the proposed Final Judgment with the terms fully resolved. Of course, should there be any difficulties, the ultimate terms of the divestiture must be acceptable to the United States.[69]

d. Contracting Practices and Coordination

COMPTEL complains at length that certain RBOC contracting practices are serving as a barrier to entry, and that, in its view, the combined effect of the mergers and the contracting practices will be to enhance the risks of anticompetitive coordination between the two surviving firms. As part of its investigation the United States, of course, considered potential entry barriers in the markets in question (including RBOC contracting practices) as well as the possibility that the mergers could enhance the risks of collusion. Whatever the entry barrier that may be posed by RBOC contracting practices, the mergers do nothing to enhance them. Nor have such contracts served to prevent multiple CLECs from building networks, entering markets, and selling significant volumes of, both wholesale and retail, Local Private Lines and related services. To the extent that AT&T and MCI were successful in

[66] The United States also concluded that any attempt to divest ''lit'' capacity would have been unduly complicated and problematic. For instance, splicing ''lit'' fibers out of the seller's network and into the buyer's would raise the prospect of customer outages. On a similar note, if the proposed Final Judgments had required the merged firm to provide the purchasers with fiber into the building, as opposed to simply to it, the merged firm might have to negotiate entrance agreements with hundreds of landlords on behalf of a third party who might not need entrance agreements for all those buildings until some time in the future. Perhaps more importantly, the divestiture buyer could well have ended up paying lease or entrance fees for countless buildings where it had no customers, greatly adding to the carrying costs of the fiber and making the divestiture assets much less attractive as a business proposition. The better approach was to simply let the buyers negotiate their own building entrance agreements, on their own terms, and better suited to their specific needs, for each building if and when they need it (i.e., if and when they win a customer in that building).

[67] It is also worth noting that fiber-optic cable does not last forever. The useful life of that fiber may be no more than 20 to 25 years. It is possible, if not likely, that much of the AT&T and MCI fiber at issue here may have been laid ten or more years ago. Thus, in many cases, in 10 years time, much of the divestiture fiber may be nearing the end of its useful life and there would be little purpose in requiring an IRU significantly longer than ten years.

[68] Indeed, because of the relative simplicity of the remedy here, the agreements between the merged firms and divestiture buyers are likely to be much less complex and potentially problematic than many other divestitures, which typically can involve difficult issues regarding, *e.g.,* transition agreements, intellectual property transfer, ''splitting up'' of customer contracts, arrangements for employees.

[69] Proposed Final Judgments § VI(C).

selling Local Private Lines and related services to the buildings in question, the divestiture purchaser could be as well.

As for coordination, the United States was unable to conclude that the change in market structure brought on by the mergers was likely to lead to competitive harm due to an increased risk of coordination.[70] The existence of numerous competitors (in addition to the merging firms) for both wholesale and large retail telecommunications customers tends to make collusion difficult. In any event, the United States' Complaints did not make any allegations regarding RBOC contracting practices or anticompetitive coordination, and hence, COMPTEL's concerns are beyond the scope of the Complaints and have essentially nothing to do with whether the proposed remedy resolves the competitive harm alleged by the United States.[71]

C. New York Attorney General

1. Summary of Comment

On February 13, 2006, the New York Attorney General (''NYAG'') submitted a comment arguing that the proposed remedies are ''unlikely to constrain the merged entities,'' [72] in particular, because (a) they did not address the effect of the mergers on Internet access, and (b) they inadequately addressed the competitive concerns as to Local Private Lines. With respect to the former, NYAG argues that the proposed Final Judgments are faulty because they do not require the merged firms to offer DSL on a stand-alone basis to consumers (i.e., without also requiring consumers to subscribe to telephone service), and because they do not require any relief related to Internet ''backbones,'' the large, interconnecting fiber-optic networks that constitute the core of the Internet. With respect to Local Private Lines, NYAG complains that the proposed remedies do not address the loss of competition from the potential elimination of AT&T's and MCI's resale of circuits owned by SBC and Verizon; [73] argues that the proposed divestitures are inadequate because they involve only a ''handful of buildings'' and, therefore, would not affect pricing throughout New York City or State, or constitute a viable network for a buyer; [74] and suggests that the remedy is ''written in disappearing ink'' because the assets to be divested can be modified at the purchaser's option and with the consent of the United States.[75]

2. Response

a. DSL, Internet Backbone, and Local Private Line Resale

Most of NYAG's comment [76] relates to issues well beyond the scope of the Complaints. NYAG argues that the proposed Final Judgments should have required customer access to unbundled DSL services. It is not clear from the comment what merger-related harm NYAG intends this to remedy, but, in any event, there appears to be no relationship between that proposed restriction and the markets alleged in the United States' Complaints.[77]

Similarly, NYAG argues that the mergers could have anticompetitive effects in the Internet backbone market and argues that ''[t]he Court should reject the Verizon-MCI merger unless and until Verizon provides the information needed to make an informed decision regarding the extent to which backbone concentration will increase as a result of the proposed merger with MCI.'' It goes on to suggest that the Court should consider ''the appropriateness of divestiture of backbone assets'' based on that information.[78] The United States investigated the effects of the mergers on the Internet backbone market, considering both the current traffic shares of the merging parties as well as potential increases in shares that might result from shifting SBC or Verizon retail customers onto the AT&T and MCI backbone. Ultimately, the United States concluded that competition in this market would not be harmed as the merged firms would continue to face several strong competitors. Therefore, it did not allege Internet backbone as a relevant product market, nor did it allege any harm in such a market.[79] Accordingly, relief directed to the Internet backbone market is unnecessary and NYAG's concerns about Internet backbone do not implicate whether the proposed Final Judgments are in the public interest.

NYAG's comment also includes a paragraph complaining that the mergers will adversely affect competition because they will eliminate ''discounted 'last mile' wholesale leasing.'' Although this concern does, at least, involve Local Private Lines, it raises an issue unrelated to anything alleged in the United States' Complaints. The United States investigated whether the mergers would have a significant adverse impact on competition in Local Private Lines by eliminating AT&T and MCI as independent resellers of ILEC circuits, but determined that the evidence did

[70] The FCC reached a similar conclusion. FCC Orders ¶ 52 (''We also do not believe that the merger increases the likelihood of coordinated interaction.''); *see also id.* 54.

[71] COMPTEL's sole basis for arguing that the contracting practices and coordination are relevant to the remedy is its allegation that if Verizon buys the divested AT&T assets, and vice versa, that may compound the competitive harm COMPTEL alleges. Putting aside the questionable merit of these claims, as discussed above, the merging firms have already solicited and received bids for the assets in question as required under the proposed Final Judgments, and Verizon did not bid for the AT&T assets nor did AT&T bid for the MCI assets that Verizon is divesting. Thus, COMPTEL's concern appears to be moot.

[72] NYAG Comment at 4 (attached hereto as Attachment 3).

[73] *Id.* at 5.

[74] *Id.* at 6.

[75] *Id.* at 6–7.

[76] NYAG also filed comments with the New York Public Service Commission (''NYPSC'') on April 29, 2005, as part of the Verizon/MCI merger proceedings before that body, raising essentially the same ''naked DSL'' and Internet backbone concerns it raises here. The NYPSC approved the Verizon/MCI merger, with certain conditions, in a detailed 64-page order on November 22, 2005. Order Asserting Jurisdiction and Approving Merger Subject to Conditions, *Joint Petition of Verizon Communications Inc. and MCI, Inc. For a Declaratory Ruling Disclaiming Jurisdiction Over or in the Alternative for Approval of Agreement and Plan of Merger,* New York Public Service Comm'n CASE 05–C–0237, (Nov. 22, 2005) (''NYPSC Order''), *available at http://www3.dps.state.ny.us/pscweb/WebFileRoom.nsf/ArticlesByCategory/135BB9AA905F47A7852570C0005155BD/$File/05c0237_11_22_05.pdf?OpenElement.*

[77] DSL is primarily a ''mass market'' service, and the most frequently cited justification during the Department's and FCC's investigations for requiring the merged firms to offer ''naked'' or ''unbundled'' DSL as a remedy is the allegation the mergers would reduce competition for mass market telephone service. If the merged firms were required to offer naked DSL, it would allegedly make it easier for standalone VoIP (''voice over internet protocol'') providers like Vonage to compete against the merged firm. The United States concluded that the evidence would not support a Section 7 case alleging competitive harm in the ''mass market.'' That conclusion was consistent with those reached by the New York Public Service Commission as well as the FCC. *See* NYPSC Order at 29 (''We conclude that the merger will not likely result in anti-competitive effects for mass market customers.''); FCC Orders at ¶¶ 81 (SBC/AT&T), 82 (Verizon/MCI) (''As discussed below, we find that [Verizon/SBC]'s acquisition of [MCI/AT&T] is not likely to result in anticompetitive effects for mass market services.''). Although neither the FCC nor the NYPSC identified a problem in ''mass market,'' and therefore saw no need for a mandatory ''naked DSL'' remedy, they did accept the parties' voluntary commitments to provide ''naked DSL'' and included them as part of their orders. FCC Orders, Apps. F, G (respectively); NYPSC Order at 61–62, 63.

[78] NYAG Comment at 17. Essentially, NYAG asks the Court to conduct its own discovery and *de novo* antitrust investigation of the Internet backbone market, conduct a trial on whether the discovered facts prove liability, and then determine the appropriate remedy. This is, of course, not consistent with the Tunney Act.

[79] The FCC and the European Union also looked at the Internet backbone issue and determined that no relief was rquired. *See, e.g.,* FCC Orders ¶¶ 108 (SBC/AT&T), 109 (Verizon/MCI); Commission of the European Communities, Case No. COMP/M.3752–Verizon/MCI, Art. 6(1)(b) Non-Opposition Decision, ¶ 45 (Oct. 7, 2005), *available at http://europa.eu.int/comm/competition/mergers/cases/decisions/m3752_20051007_20310_en.pdf.*

not support such a conclusion.[80] Accordingly, it did not allege this as competitive harm in its Complaints, nor would it be appropriate to seek any relief regarding resold circuits.[81]

City or State-wide Pricing

NYAG briefly complains that the divestiture of only a ''handful of buildings'' is insufficient because it would not affect pricing throughout New York City or State. The United States did not allege, however, that the mergers would adversely affect prices throughout a whole city, state, or metropolitan area. As previously noted, there are multiple carriers with extensive networks in each metropolitan area under consideration,[82] and the evidence did not demonstrate a likelihood of anticompetitive price effects covering all buildings in a metropolitan area. What the United States alleged was that the proposed mergers were likely to reduce competition to certain 2-to-1 buildings in each area, and the proposed remedy is directed at restoring competition to those buildings.[83] NYAG notes that it is ''hard to see how this remedy could have any significant positive effect on competition beyond the footprint of the handful of individual buildings identified.''[84] But that is the point: The identified buildings are the only ones where competition was likely to be harmed, and they are, therefore, the only ones for which a remedy was required. The proposed remedy should not be viewed as inadequate, or inconsistent with the public interest, simply because it fails to affect competition in locations where the evidence did not demonstrate an anticompetitive effect.

(c) Scope of Divestiture

NYAG also argues that the divested buildings, at least in New York, ''do not, themselves, form the critical mass needed to build a network * * *. [A]ny would-be competitor who acquired the divested MCI facilities serving these scattered buildings would have neither the scope nor scale necessary to stand in MCI's competitive shoes.''[85] But the proposed Final Judgments did not contemplate that the purchaser would necessarily have no other assets beyond those being divested. As discussed in Section III.A.2.d, in every metropolitan area identified in the Complaints (including New York) there are at least several CLECs with extensive networks, including, e.g., switches, fiber, dozens or hundreds of ''on-net'' locations. Those CLECs are already effective competitors in many buildings in the metropolitan area, though not in the buildings covered by the proposed Final Judgments where they lack a last-mile connection. The proposed remedy, by providing a carrier with fiber-optic capacity to those buildings, will enable it to replace the competition that could potentially be lost as a result of the merger. The purpose of the United States having approval rights over the proposed buyer of the assets is to ensure that the assets are acquired by a firm that can effectively compete to provide services to the buildings in question.

(d) ''Disappearing Ink''

Finally, NYAG also raises one brief point regarding the assets to be divested: it suggests that the proposed remedy is ''written in disappearing ink'' because the assets to be divested can be modified at the purchaser's option and with the consent of the United States.[86] The proposed divestitures in these matters involve a great many assets, including more than 700 lateral connections to specific street addresses. Moreover, because 18 metropolitan areas are involved, there will almost certainly be several different purchasers. It is possible that as the divestiture sales proceed, it will be discovered that exclusions in the divestiture assets are desirable. For instance, if it turns out that, unbeknownst to the United States at the time of filing, one of the buildings in question is scheduled for demolition, it hardly makes sense to require a divestiture of a lateral to that building. In order to maintain flexibility to deal with such contingencies, and to avoid burdening the Court with requests for a decree modification each time such an occasion might arise, the United States included in the proposed Final Judgments a mechanism for minor exclusions from the divestiture assets.[87] To ensure that such exclusions are consistent with the purposes of the proposed Final Judgments, any exclusions must be at the purchaser's option, will require the consent of the United States, and are limited to assets and rights not necessary to meet the competitive aims of the Final Judgment.

IV. Conclusion

After careful consideration of these public comments, the United States remains of the view that the proposed Final Judgments provide an effective and appropriate remedy for the antitrust violation alleged in the Complaints and that their entry, therefore, would be in the public interest. Any settlement is a product of negotiation and compromise, and as courts have noted, the purpose of Tunney Act review is not for the court to engage in an ''unrestricted evaluation of what relief would best serve the public''[88] or to determine the relief ''that will best serve society,''[89] it is simply to determine whether the proposed decree is within the reaches of

[80] The United States' investigation determined that A&T's and MCI's sales of resold circuits are relatively small and of limited competitive significance. Moreover, because numerous other CLECs have extensive fiber-optic networks in the metropolitan areas under consideration, as well as contracts with Verizon and SBC providing them with discounts similar to those of AT&T and MCI, other competitors could likely replace any competition that might be lost by the elimination of AT&T and MCI as independent resellers in SBC's and Verizon's territories respectively. The FCC reached a similar conclusion. FCC Order ¶¶ 33, 43.

[81] The United States devoted significant time to investigating the issues discussed in NYAG's comments and concluded that the evidence did not support alleging competitive harm related to ''mass market,'' Internet backbone, or resold Local Private Lines. NYAG has the statutory ability to investigate violations of state and federal antitrust laws, *see e.g.,* N.Y. Gen. Bus. Law § 343 (McKinney 2006) (providing for pre-complaint discovery), and the standing to enforce them. If NYAG believed the evidence justified a broad antitrust case based on resold Local Private Lines, Internet backbone, DSL, or anything else, it could have brought that case. Here, it elected not to do so.

[82] For instance, in the New York metropolitan area—the focus of NYAG's concerns—the United States' investigation identified more than a dozen carriers besides Verizon and MCI with significant fiber networks. At least a half dozen of these had hundred or thousands of route miles of fiber. The United States identified well in excess of 4,000 CLEC ''last-mile'' building connections; less than 15 percent of these belonged to MCI. These conclusions are consistent with those reached by the New York Public Service Commission in its analysis of the New York metropolitan area. *See* NYPSC Order at 45 (''We conclude that on average there are approximately six alternative fiber networks within 1/10 of a mile of the MCI-lit buildings in New York, and that 75% of those buildings have two or more alternative carriers.'')

[83] *See supra* note 56.

[84] NYAG Comment at 6.

[85] *Id.*

[86] NYAG Comment at 7; *see* Proposed Final Judgments § II(D) (''With the approval of the United States, and in its sole discretion, and at the Acquirer's option, the Divestiture Assets may be modified to exclude assets and rights that are not necessary to meet the competitive aims of this Final Judgment.''). This provision is similar to ones used in other antitrust consent decrees that suggest that something less than the entire ''divestiture assets'' can be sold if the United States consents in writing. *See e.g., United States* v. *Marquee Holdings, Inc.,* No. 05 CV 10722 § IV(I) (KMW) (S.D.N.Y. filed Dec. 22, 2005) (proposed final judgment), available at *http://www.usdoj.gov/atr/cases/f213800/213862.htm.*; *United States* v. *United Health Group Incorporated,* No. 1:05CV02436, § IV(I) (RMU) (D.D.C. filed Dec. 20, 2005) (proposed final judgment), available at *http://www.usdoj.gov/atr/cases/f213800/213817.htm.*

[87] The Tunney Act condemns ambiguity in proposed Final Judgments. 15 U.S.C. 16(e)(1)(A). It is for that reason that the proposed Final Judgments are extremely specific, identifying hundreds of individual building addresses. But that very specificity creates the need for some flexibility.

[88] BNS, 858 F.2d at 462 (citing Bechtel Corp., 648 F.2d at 666).

[89] Bechtel, 648 F.2d at 666.

the public interest—''even if it falls short of the remedy the court would impose on its own.'' [90]

Under subsection (A) of 15 U.S.C. 16(e)(1), the Court is instructed to consider a number of factors relating to the competitive impact of the proposed Final Judgments.[91] With respect to the ''termination of alleged violations,'' the Section 8 violation in each matter here is a merger that would reduce competition in Local Private Line and related services to certain buildings; by restoring competition to those buildings, the proposed remedy terminates the violations. With respect to ''provisions for enforcement and modification,'' the proposed Final Judgments contain the standard provisions that have been effective in numerous other cases brought by the United States. In particular, the proposed Final Judgments, provide that the Court retains jurisdiction over this action, and the parties may apply to the Court for any order necessary or appropriate for the modification, interpretation, or enforcement of the Final Judgment. With respect to ''duration of relief sought,'' the proposed divestitures are for a minimum of ten years. As discussed above, this period is adequate and appropriate given the rapidly changing nature of technology and the industry, as well as the useful life of the divestiture assets. With respect to ''anticipated effects of alternative remedies actually considered'' the alternative of injunctions blocking the proposed mergers would likely have prevented the firms in question from realizing literally billions of dollars in efficiencies. Such an extreme remedy is unwarranted given the relatively small magnitude of the competitive problem and the availability of a divestiture remedy that will completely resolve it. With respect to ''whether its terms are ambiguous,'' no term in either proposed Final Judgment is ambiguous. Among other things, the assets to be divested are specified down tot he individual building addresses. Finally, with respect to ''any other competitive considerations bearing upon the adequacy of such judgment,'' none casts doubt upon the adequacy of the proposed Final Judgments.

Under subsection (B), the Court is to consider ''the impact of entry of such judgment upon competition in the relevant market or markets, upon the public generally and individuals alleging specific injury from the violations set forth in the complaint including consideration of the public benefit, if any, to be derived from a determination of the issues at trial.'' [92] Because the buildings identified in the proposed Final Judgments are the only ones in which competition is likely to be lessened as a result of the mergers, the impact of entry of the proposed Final Judgments will be to restore any competition lost as a result of the merger in Local Private Lines and related services. Customers for Local Private Line and related services provided to the buildings in question—parties who might have otherwise suffered injury from the violations set forth in the Complaints—are likely to have competitive choice restored to them via the contemplated divestitures. Moreover, the relief is sufficiently limited so that the public will not suffer any adverse consequences from the proposed Final Judgments.[93] No conceivable benefit could arise from a determination of these issues at trial. Based on the factors set forth in the Tunney Act, the proposed Final Judgments are in the public interest.

Pursuant to Section 16(d) of the Tunney Act, the United States is submitting the public comments and its Response to the **Federal Register** for publication. Our response is also being provided to each of the commenters. After the comments and the United States' Response to Comments are published in the **Federal Register**, the United States will move this Court to enter the proposed Final Judgments.

Respectfully submitted,

Laury E. Bobbish,

Assistant Chief.

Lawrence M. Frankel,

(D.C. Bar No. 441532), Trial Attorney.

U.S. Department of Justice, Antitrust Division, Telecommunications and Media Enforcement Section, 1401 H Street, NW., Suite 8000, Washington, DC 20530, Telephone: (202) 514–5621, Facsimile: (202) 514–6381.

[90] AT&T, 552 F. Supp. at 151.

[91] The Court shall consider ''the competitive impact of such judgment, including termination of alleged violations, provisions for enforcement and modification, duration of relief sought, anticipated effects of alternative remedies actually considered, whether its terms are ambiguous, and any other competitive considerations bearing upon the adequacy of such judgment that the court deems necessary to a determination of whether the consent judgment is in the public interest.'' 15 U.S.C. 16(e)(1)(A).

[92] 15 U.S.C. 16(e)(1)(B).

[93] Conversely, an injunction against the mergers, or a divestiture of customers as proposed by COMPTEL would likely have adverse impact on the public.

Plaintiff United States' Response to Comments

Filed in United States v. SBC Communications, Inc. and AT&T Corp., Civ. Action No. 1:05CV02102 (EGS) and United States v. Verizon Communications and MCI, Inc., Civ. Action No. 1:05CV02103 (EGS)

Attachment 1—Comments Regarding the Proposed Consent Decrees Submitted on Behalf of the Alliance for Competition in Telecommunications (ACTel)

Comments Regarding the Proposed Consent Decrees in *United States* v. *SBC Communications, Inc.* and *AT&T Corp.* (Civil Case No. 05–2102) and *United States* v. *Verizon Communications, Inc.* and *MCI, Inc.* (Civil Case No. 05–2103)

Submitted on Behalf of the Alliance for Competition in Telecommunications (ACTel)

Thomas Cohen,

Executive Director, Alliance for Competition in Telecommunications.

Gary L. Reback,

Carr & Ferrell LLP.

On December 15, 2005, the Department of Justice published in the **Federal Register** the Proposed Final Judgments resolving virtually identical Complaints filed by the United States to enjoin the acquisition of AT&T Corp. by SBC Communications Inc., and the acquisition of MCI, Inc. by Verizon Communications, Inc. The respective Complaints characterize the former acquisition as creating ''the nation's largest provider of telecommunications services,'' and the latter transaction as creating ''one of the nation's largest providers of telecommunications services.'' Complaints at ¶1. Among all of the overlaps and increases of concentration in telecommunications products, services and assets that the transactions procedure, and notwithstanding the complaints and protests of consumer and business customers at both the state and Federal level, the Department of Justice's challenge to the proposed transaction is limited to the effect of a single duplicative product offering.

Specifically, the Complaints seek to enjoin both transactions, because they ''will substantially lessen competition'' in the provision and sale of ''Local Private Lines'' (also known as ''special access'') to the wholesale market as well as voice and data services that rely on Local Private Lines, with the likely result that prices for the Lines and services using those Lines will increase

''to levels above that which would prevail absent the merger(s).'' Complaints ¶¶1, 25, 33. The Complaints indicate that, absent relief, competition will be diminished and prices will rise for both wholesale and retail ''Local Private Line'' customers. Complaints ¶25.

These comments are directed to both cases and are timely submitted pursuant to the Antitrust Procedures and Penalties Act, 15 U.S.C. 16(b)–(e) (known as the ''Tunney Act''), on behalf of the Alliance for Competition in Telecommunications (''ACTel''). ACTel members include both competitive local exchange carriers (''CLECs'') and interexchange carriers (''IXCs'') that buy Local Private Lines [1] at wholesale from the merging companies. ACTel members combine these purchased lines with additional facilities, technology, products and services to sell their own value-added telecommunications services, sometimes in competition with the merging companies, to end user business customers. Many of these value-added telecommunications services are directed to small- and medium-sized business customers. These facts are described in the Complaints at ¶¶14, 23.

ACTel members and their customers are therefore among those that the Complaints identify as suffering competitive injury from the transactions, and on whose behalf the Government seeks relief. ACTel agrees that the harm alleged in the Complaints is accurate, demonstrable, and unless adequately remedied, ruinous. Indeed, ACTel members, in compliance with Department of Justice compulsory process, produced documents and information revealing that the proposed transactions can be expected to increase the cost of Local Private Lines from 20% to 500% depending on the metropolitan area and type of circuit being purchased—if the merged parties even continue to sell Local Private Lines to ACTel members at all after the acquisitions.

But while the Complaints correctly identify the competitive harm produced by the transaction, the remedy in the Proposed Final Judgments fails even the most deferential standard for Tunney Acts review. The remedy does not prevent the elimination of competition of Local Private Lines (the injury charged in the Complaints) because, among other things, the remedy set forth in the Proposed Judgments, unlike the injury charged in the Complaints, addresses only the part of the Private Line that connects to a building, not the part of the Private Line that connects to a carrier's network. Hence, reviewing the remedy ''in relationship to the violations that the United States has alleged in its Complaints(s),'' [2] and deferring to the Government to whatever extent is required by law, the remedy does not, and cannot logically, ameliorate the harm alleged in the Complaints.

The judicial review of the Government's settlements in these cases will constitute the first significant application of the Tunney Act since Congress amended that statute in 2004. The Congressional amendments specifically overruled District of Columbia Circuit Court of Appeals and District Court precedent that was deemed overly deferential to Antitrust Division consent decrees.[3] In response to those decisions, Congress reemphasized its intention that courts reviewing consent decrees ''make an independent, objective, and active determination without deference to the DOJ.'' [4] Courts are to provide an ''independent safeguard'' against ''inadequate settlements.'' [5] Specifically, the Act was amended to *compel* reviewing courts to consider both ''ambiguity'' in the terms of the proposed remedy, as well as the ''impact'' of the proposed settlements on ''competitors in the relevant market or markets.'' [6]

This is not a case in which there is some debate about the efficacy of the proposed remedy. Rather, this is the case in which the court documents filed by the Government, as well as uncontroverted parts of the Government's evidence, compel the conclusion that the remedy cannot succeed. The proposed remedy fails to satisfy the Tunney Act even when judged under the overly deferential standard proposed by the Government. When evaluated under the standard required by Congress in the 2004 amendments to the Tunney Act, the proposed remedy is barely worth of serious consideration.

Prior to the Acquisitions, The Wholesale Market Functioned Effectively, Producing Low Prices

Any evaluation of the Government's efforts in these cases to protect the wholesale Private Line market from anticompetitive injury must begin with an understanding of the magnitude of the wholesale market and its importance. While the Complaint [7] formally denominates the relevant product market as ''Local Private Lines,'' the Complaint goes on to explain that SBC and Verizon refer to these products as ''special access'' circuits.

As the Complaint points out, most office buildings are connected, or ''lit,'' only by either SBC or Verizon in their respective territories. In pricing ''special access'' circuits, then, SBC and Verizon can frequently charge whatever the market will bear, unless the price for a particular circuit is constrained by FCC regulations. Consequently, SBC and Verizon special access revenues, as well as annual rates of return on special access, have grown dramatically over the past decade. Verizon's annual rate of return on special access was 2.14% in 1996, but over 23% in 2003. SBC's annual rate of return on special access was 63.14% in 2003. Overall, according to official comments filed by MCI at the FCC, special access revenues were approximately $3.14B in 1996, but had grown to $13.4B in 2003.

Over the years, in response to the high special access prices that SBC and Verizon charged, a robust and competitive wholesale market for Local Private Lines has emerged. In this wholesale market, carriers like the ACTel members lease Local Private Lines from other carriers, in order to reach business customers. AT&T and MCI have the largest networks, aside from ''Baby Bells'' like Verizon and SBC, *see* Complaint ¶ 17, and AT&T and MCI have become mainstays of the

[1] Actually the Lines are based, but because the Complaint uses terminology of sale, these comments do, as well.

[2] This is the standard the Government claims is appropriate for Tunney Act review. *See* FR at 74350. However, given that Congress amended the Tunney Act to overrule District of Columbia Circuit Court of Appeals and District Court precedent that was overly deferential to Antitrust Division consent decrees, it would make a mockery of the legislation to impose the very narrow standard of review advocated by the Government. The amendments to the Tunney Act *compel* the reviewing court to consider, inter alia, the ''impact'' of the entry of judgment on ''competition in the relevant market'' *See* Pub. L. 108–327, 221(b)(2) rewriting 15 U.S.C. 16(e).

No suggestion is made in the statute or legislative history that the courts should defer to either the Government's identification of injury or the Government's proposed remedy to that injury. On the contrary, as explained in the text following footnote 2 above, the reviewing court is to conduct an ''independent, objective, and active determination without deference to the DOJ.''

[3] *See* 150 Cong. Rec., S 3617 (April 2, 2004) (Statement of Sen. Kohl).

[4] *Id.*

[5] *Id.*

[6] *See id* at S 3618; Pub. L. 108–327, § 221(b)(2) amending 15 U.S.C. 16(e).

[7] The two Complaints use identical paragraph numbering and virtual identical language. For ease of presentation, the singular is generally used instead of the plural throughout the rest of these comments, and SBC and AT&T are generally used as examples (as opposed to Verizon or MCI) but the comments are directed to both cases unless otherwise indicated.

wholesale market. In fact, it is doubtful there would be a wholesale market, certainly a market of the current size and scope, without these two companies.

The AT&T and MCI networks were not created overnight; they were built up over decades. Because neither AT&T nor MCI started from a position of local monopoly, as Verizon and SBC did, the business incentives and perceived opportunities of AT&T and MCI, on one hand, and SBC and Verizon on the other, were always quite different. In particular, both AT&T and MCI seized upon the opportunity to capture additional revenue by leasing capacity in their local networks to other competitive carriers. In addition, AT&T and MCI negotiated significant discounts from SCB and Verizon for the circuits they leased. These discounted, leased circuits, coupled with the large networks built or acquired by AT&T and MCI, permitted those companies to make very broad, low-priced offerings to the wholesale market. As a result, the wholesale market for Local Private Lines grew to an enormous size. In widely published reports that were submitted to the Department of Justice, two respected analysts estimated the Local Private Line market as roughly $14B.

Companies that procure Local Private Lines in the wholesale market keep records of competitive bids submitted to them for the purchase of these Lines from other companies, specifically including AT&T and MCI. Many such bidding records, kept in the ordinary course of business to select the lowest wholesale price offered for circuits to be procured, were turned over to the Government in response to compulsory process as part of the Government's investigation of these acquisitions.

These data sets show that AT&T and MCI are the low-price leaders in the wholesale market for Local Private Lines. They are not only the most pervasive suppliers, but they are the most aggressive and cheapest suppliers, as well. Standard statistical analysis of this bid data demonstrates that AT&T's bids result in lower prices for Local Private Lines in SBC territory, and MCI's bids result in lower prices for Local Private Lines in Verizon territory, regardless of the number of other bidders offering the same circuit. In fact, the data gathered by the Government's investigation showed that even SBC itself has responded to competition from AT&T by lowering its own Local Private Line wholesale prices.

Finally, the data sets gathered by the Department of Justice also demonstrate that the larger the number of competing offers (up to a reasonable level), the lower the price charged for a particular circuit to the acquiring purchaser. In other words, these are not markets in which two competitors are as good for competition as a larger number of competitors would be. To the contrary, three competitors offering to sell a particular circuit produces lower prices that just two competitors, and four competitors produces lower prices than three competitors.

In sum, there is good reason for the Department of Justice to file lawsuits to try and prevent competitive injury to the wholesale market for Local Private Lines. That market, prior to the acquisitions, was vast, robust and competitive. It operated efficiently, producing significantly lower prices than the prices that SBC or Verizon charged, and it allocated resources according to competitive bidding. The wholesale market has been producing differentiated telecommunications services at low, free-market prices to all types of business customers, particularly medium-sized enterprises. Unless conditioned in a meaningful way, the proposed acquisitions will devastate this market. But by its own terms, the Government's proposed remedy does not meet the competitive danger.

The Proposed Judgment Is Inconsistent With the Complaint in the Treatment of ''Transport''

The Complaint identifies the relevant product market as ''Local Private Lines,'' and telecommunications services that rely on those lines. Complaint ¶ 19. As the Complaint explains, a Local Private Line is not a fixed, freestanding physical product, but rather is more akin to a marketing concept—a recognized service category among carriers and customers. Complaint ¶ 21. It is basically a portion of a carrier's network (a circuit or group of circuits) that is specified (''dedicated'') and sold to ACTel members and other carriers to connect their networks to discernible points outside of those networks. As the Complaint states, a Local Private Line originates and terminates within a single metropolitan area. Complaint ¶ 13.

According to the Complaint, a ''typical'' Local Private Line has two components—''local loop'' (also called ''laterals'') and ''transport.'' Complaint at ¶ 13. *See also* Proposed Final Judgment § II, D; Competitive Impact Statement, FR 74348. A ''loop'' connects a building to a carrier's network. But that connection might not occur at the right point on the network to facilitate the transmission of voice and data from the building to its desired termination point—a faraway building, for example. As the Proposed Final Judgment explains, the loop only goes from a building to the *first* splice point on a carrier's network used to serve different buildings. Proposed Final Judgment § II F. So a ''transport'' circuit is added into the Private Line to extend it, from the end of the loop to the right place on the carrier's network (perhaps a switching facility farther away), or from one carrier's network to another carrier's network. *See* Figure 1.

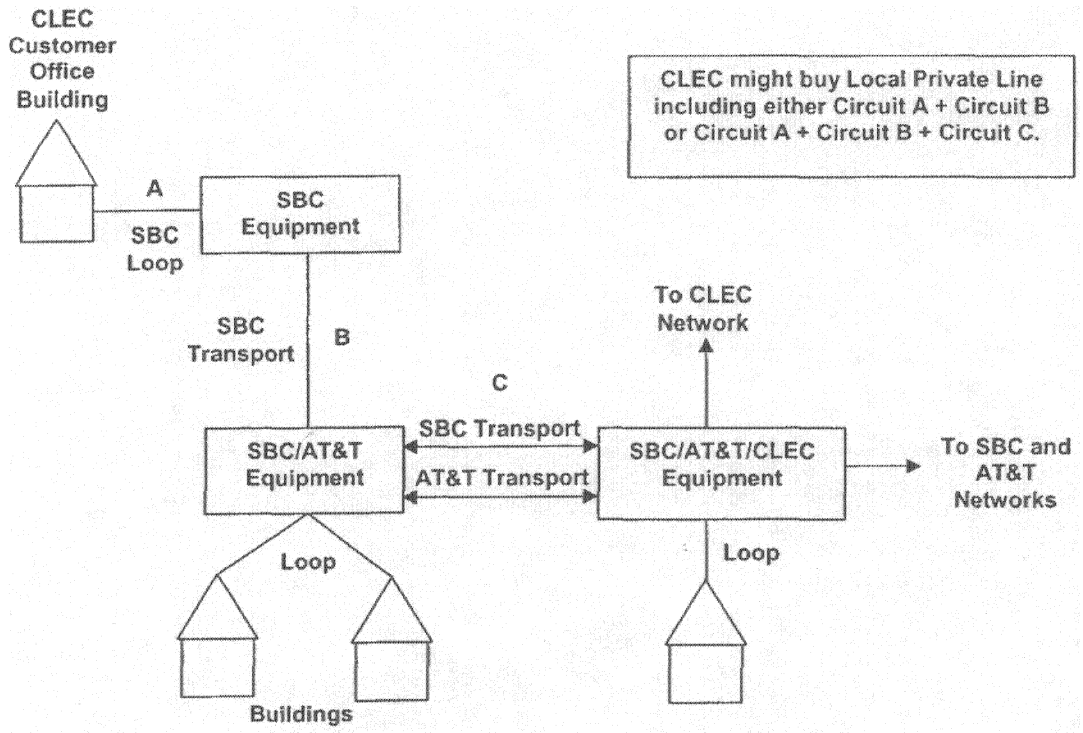

FIGURE 1

There may be multiple carrier suppliers of a particular ''loop'' and the same or different multiple carrier suppliers of transport circuits that connect to the loop. Increasingly, as documents submitted to the Government indicate, CLECs and IXCs buy transport and loop circuits separately from different suppliers, and combine the segments into Local Private Lines for resale to end user business customers.

The Government documents sometimes focus on Local Private Lines and sometimes focus only on the loop portions of those Lines. For example, the ''Relevant Product Markets'' in the Complaint are defined as Local Private Lines, Complaint at ¶ 19, and the ''Anticompetitive Effects'' section of the Complaint is directed to the effect of the merger on ''Local Private Line'' service, Complaint at ¶ 25. Similarly, the explanation of the relief in the Competitive Impact Statement speaks of a remedy that will ''eliminate the anticompetitive effects of the acquisition of Local Private Lines.'' *See* FR 74348. The 2004 Tunney Act amendments require the reviewing court to consider the impact of the proposed settlement on competition in this particular market identified by the Government. *See* 15 U.S.C. 16(e); S 3618.

But the Proposed Final Judgment does not speak of ''Local Private Lines'' at all. Rather, the Judgment requires the divestiture only of certain ''loop'' circuits, identified by the addresses of the buildings at which the loops originate. *See* Proposed Final Judgment § II D. The Competitive Impact Statement explains that these are buildings serviced pre-merger by both AT&T and SBC loops (or MCI and Verizon loops, as the case may be). However, not all buildings serviced by merging parties are covered by the terms of the Proposed Judgment. Divestiture of a *loop* circuit to a particular building is required only if AT&T and SBC (or Verizon and MCI) were the only carriers connected by their own loops to the building prior to the acquisition. Only in these ''2 going to 1'' *loop* scenarios is a divestiture required. *See* FR at 74348. *See* Figure 2.

The Final Judgment also provides for the divestiture of certain ''transport'' circuits—but only those attendant to the divested loops. *See* Proposed Judgment § II D. The Competitive Impact Statement explains that the only transport circuits to be divested are those that enable the divested loops to be connected to the network of the specific carrier purchasing those loops. FR 74348. No provision is made for the transmission of voice and data information *from* the purchasing carrier's network to another building in the same metropolitan area not directly connected to that carrier's network.

Merely from a review of the Government's documents, it is apparent that three deficiencies in the Government's approach prevent the proposed remedy from being effective.

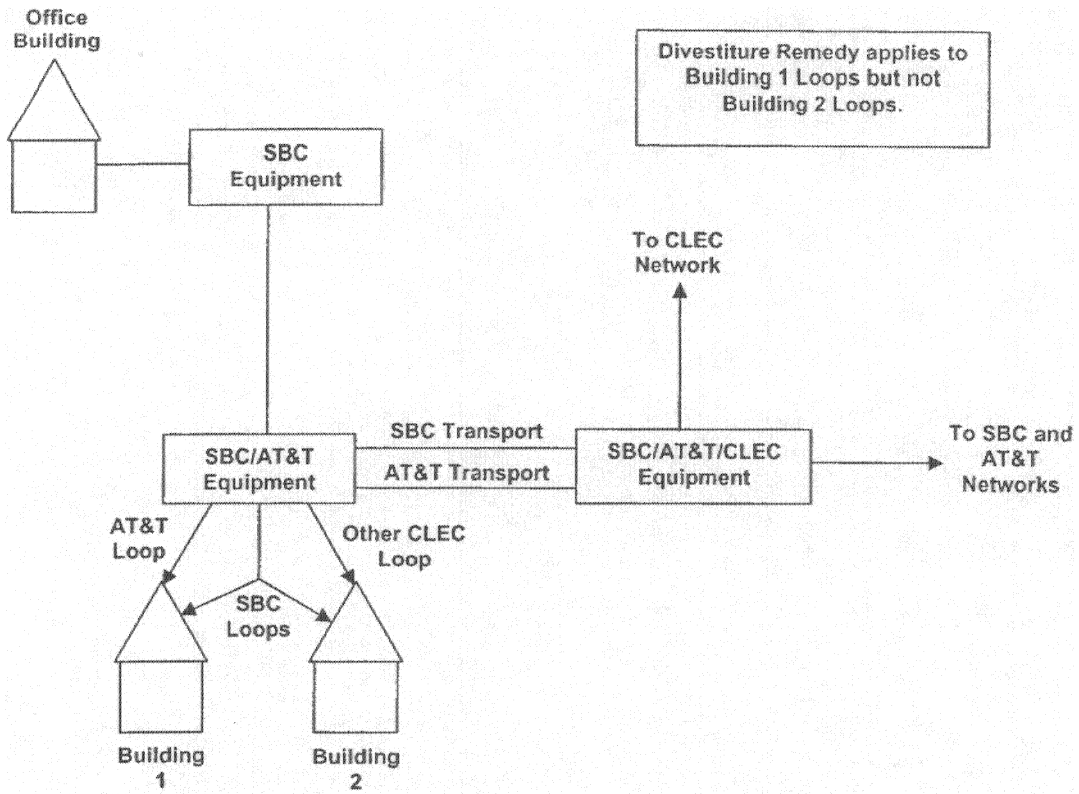

FIGURE 2

The Proposed Final Judgment Does Not Even Appear To Cover All ''2 to 1'' Loop Buildings

First, there is some ambiguity, if not outright error, in the discrepancy between the number of buildings the Proposed Final Judgment identifies and what publicly available data suggests in terms of the number of ''2 to 1'' loop buildings affected by the mergers. Ambiguity in the proposed remedy is one of the issues the District Court is required to consider by the express terms of the 2004 Tunney Act amendments.

The building lists attached to the Proposed Judgment lists only 383 buildings in SBC territory and 356 buildings in Verizon territory to which the remedy will apply. This is inconsistent with data relied upon by both SBC and Verizon in Federal Communications Commission proceedings. GeoResults, Inc., a private corporation, publishes data listing the presence and type of network terminating equipment carriers have placed in buildings. Verizon has stated, in FCC proceedings, that the data used by GeoResults is ''recognized as an industry standard by numerous national and international telecommunications standard-setting bodies'' and can be reliably used to ''identify and locate buildings * * * that are served by [competitive providers'] fiber-enabled network equipment.'' [8] SBC similarly stated to the FCC that ''GeoResults is a reasonably reliable source, and if anything its data understate the deployment of competitive fiber.'' [9]

GeoResults data includes buildings in which CLECs buy loops from SBC and Verizon, as well as buildings to which CLECs physically connect with their own fiber. GeoResults may therefore significantly overestimate the number of ''2 to 1'' loop situations the Government's remedy purports to address. But the difference between what the GeoResults data predicts and the number of buildings the Government's remedy purports to address is so vast as to defy such an easy explanation. This is true for both SBC and Verizon territory. For example, as to SBC territory, GeoResults data indicates that in Cleveland there are approximately 1630 ''2 going to 1'' buildings, but the Government's list in the Proposed Final Judgment includes none. In Milwaukee, the GeoResults data predicts 1124 such buildings, but the Proposed Final Judgment lists but 38. In Los Angeles, GeoResults predicts 6318 buildings requiring the Government's remedy, but the Government lists only 36.

The same discrepancy appears for the cities in Verizon territory. GeoResults data indicates there are more than 100 ''2 to 1'' buildings in Pittsburgh, but the Government has none listed. According to GeoResults, Philadelphia should have almost 300 such buildings, but the Government lists only 12. So, making whatever allowance is appropriate for the inclusion of leased loops in the GeoResults data, the Government's lists seem to include far two few buildings.

The Government does not explain or document, for the benefit of both the Court and the public, how it arrived at its lists of ''2 to 1'' situations. Presumably the Government started with building lists tendered by the merging parties, and either audited or made adjustments to these lists. While the GeoResults inclusion of leased loops might account for some of the discrepancy between the GeoResults data and the Government lists, it certainly appears likely, from the filings AT&T made in the FCC to secure clearance for its acquisition, that the Government's remedy does not include all buildings that the Complaint

[8] Verizon comments, Declaration of Verses, LaTaille, Jordan and Reny, July 15, 2004, FCC Docket 01–338, ¶¶ 22–24.

[9] Joint Declaration of Scott Alexander and Rebecca Sparks of SBC, ¶¶ 22–23, attached to Letter of Christopher Hermann of SBC to Ms. Marlene Dortch of FCC, Nov. 16, 2004, FCC Docket 01–338.

purports to cover. There is another more plausible explanation for this discrepancy.

At the FCC, AT&T's economic expert filed a declaration in aid of the merging companies' claim that the proposed merger would not produce the anticompetitive effects feared by the Government. The declaration sets forth the total number of ''2 to 1'' buildings in SBC territory based on AT&T internal records.[10] That precise number is redacted from the FCC public record, but the other verbiage from the declaration, including the expert's methodology, remain in the public record. In the declaration, the expert starts with the total number of ''2 to 1'' buildings and then makes subtractions from that total. For example, in aid of his argument that all ''2 to 1'' situations will not produce price increases, the expert subtracts ''2 to 1'' situations in which he argues that other CLECs might build their own loops, even if AT&T's loops are acquired by SBC. Similarly, he subtracts situations in which he claims that, although AT&T is eliminated as SBC's only competitor, the FCC regulates the price SBC can charge for the loop in question, so competitive injury is minimized. *See* Carlton Dec. at ¶¶ 15–48.

Given the large discrepancy between publicly available data and the number of buildings on the Government's lists, it would appear that the Government made such subtractions from the total number of ''2 to 1'' buildings to come up with the lists attached to the Proposed Final Judgment. It appears, for example, that the Government subtracted the situations in which AT&T's expert argued that the CLECs would build their own loops.

But such subtractions are impermissible by the express terms of the Complaint. The Complaint plainly states, for example, that competitive injury will occur whenever AT&T is the only ''facilities-based,'' (*i.e.,* owning its own line) competitive alternative to SBC for Local Private Line connections to buildings. Complaint at ¶¶25, 26. The Competitive Impact Statement similarly states that ''buildings where AT&T is the only CLEC with a last-mile-connection''—without limitation or subtractions—are the places where injury to competition occurs. FR At 74348. And the Complaint expressly rejects the notion that other CLECs might build their own lateral connections to these buildings. Complaint at ¶¶27–29. After reviewing the costs associated with building a lateral, the Complaint concludes that ''entry is unlikely to eliminate the competitive harm that would likely result from the proposed merger.'' Complaint at ¶29.

The Government needs to explain its methodology to permit meaningful judicial review. The Government papers are filled with precisely the ambiguity that the amended Tunney Act does not permit. If the Proposed Final Judgment does not address *all* situations in which AT&T is eliminated as the only facilities-based competitive alternative to SBC for loops, the court must withhold its approval of the settlements.

The Proposed Judgment Fails to Remedy the Injury Because the Judgment Addresses Only the Building End of Loops

Even when the building lists are made complete to conform to the Government's allegations, the remedy in the Proposed Final Judgment—providing a divestiture for all ''2 going to 1'' *loop* situations—fails to correct the competitive injury alleged in the Complaint (elimination of competition for ''Private Line'' service), and therefore fails the most deferential Tunney Act review. This failure results from the fact that the remedy, unlike the injury charged in the Complaint, addresses only the part of the Local Private Line that connects to a building, not the part of the Private Line that connects to a carrier's network.

The Complaint explains that a ''typical'' Local Private Line has two components—a ''loop'' (or ''lateral'') and a ''transport'' circuit. Complaint at ¶13. As explained above, the ''loop'' connects the building to a carrier's network and the ''transport'' circuit extends the loop from the initial splice point on the carrier's network to other points on the carrier's network or to other carriers' networks.

The Complaints alleges that where AT&T is eliminated as the only facilities-based competitor to SBC for Local Private Lines, the merged company will be able to raise prices to customers of Local Private Lines (including ACTel members), thereby creating an antitrust violation. Complaint ¶¶25, 32–33. But the Proposed Final Judgment orders the divestiture of only certain loops (''laterals'') with attendant transport. Final Judgment § IID. The Competitive Impact Statement tries to explain this inconsistency by suggesting that it is decrease in competition for loops (2 going to 1) that creates the injury in the Local Private Line market. FR 74348.

The approach used in the Proposed Final Judgment requires the divestiture only of these loop segments (with attendant transport) that result in a ''2 to 1'' loop situation when viewed from the *origin* of the loop, that is, from the building. Even assuming the rather dubious assertion that it is the decrease in competition for loops that creates the injury in the Local Private Line market, the remedial approach used in the Final Judgment (looking to the origin point of the loop by building address), will not prevent the harm alleged in the Complaint (a price increase to customers of Local Private Lines).

This is because the ''remedy'' will only maintain competitive alternatives for transmissions from a building to a carrier's network. But no one simply calls a carrier's network; the intended destination of a call is always another building, frequently connected to the carrier's network by another Local Private Line that may not be covered by the terms of the Proposed Final Judgment. Because the Proposed Final Judgment identifies the affected ''2 to 1'' Local Private Lines only from the point of the *loop* original at the building, it does not prevent the acquisition from restraining competition by producing ''2 to 1'' situations in the Local Private Lines that take the call from the carrier's network to the destination building.

This is best illustrated by the example of a corporation with main offices in a downtown high-rise and branch offices in suburban office parks in the same metropolitan area. The corporation is a customer of a CLEC. The customer's headquarters downtown needs to send high-volume voice and data transmissions to its branch offices in the suburbs. Before the merger, the CLEC bought a Private Line from AT&T to service the customer and connect the originating building to the CLEC's network. If AT&T were the only facilities-based carrier serving the building in competition with SBC before the merger, the Final Judgment remedy, in theory, would prevent the merged company from extracting a higher price for the Private Line because the CLEC would be able to buy the divested loop itself, or lease it from the carrier that buys it as a ''divestiture asset'' under the Proposed Final Judgment.

The Proposed Final Judgment also requires the divestiture of transport circuits sufficient to connect that loop's splice point on the AT&T network to the purchasing CLEC's network. FR 74348.

[10] Reply Declaration of Dennis W. Carlton and Hal S. Sider, May 9, 2005, as an attachment to the Joint Opposition of SBC Communications Inc. and AT&T Corp. To Petitions To Deny and Reply Comments, filed In the Matter of Applications for Consent to Transfer of Control of Licenses and Section 214 Authorizations from AT&T Corp., Transferor, to SBC Communications Inc., Transferee, WC Docket No. 05–65, Federal Communications Commission, May 9, 2005, at ¶¶ 15–48 (hereinafter sometimes ''Carlton Dec.'').

So, prior to the acquisition, the CLEC had two Private Line choices from the downtown main office to its network, and the CLEC continued to have two choices after the acquisitions. The remedy can therefore be presumed successful at getting the call onto the CLEC's network without a price increase created by a ''2 to 1'' loop situation resulting from the acquisition. *See* Figure 3.

But when the voice and data transmissions leave the CLEC's network and go to the suburban office park location, the Final Judgment ''remedy'' often will be of no help. The transmissions would have to go from the CLEC's network over a ''transport'' circuit to a splice point for the lateral connecting to the suburban office building. Before the acquisition, if AT&T and SBC provided the only facilities-based competition for the transport circuit, then after the acquisition the merged company, as the only supplier of the transport circuit, is in a position to raise the price for that circuit to higher than competitive levels under the theory of the Government's Complaint. *See* Complaint at ¶25. The remedy does not address the ''2 to 1'' transport situation.

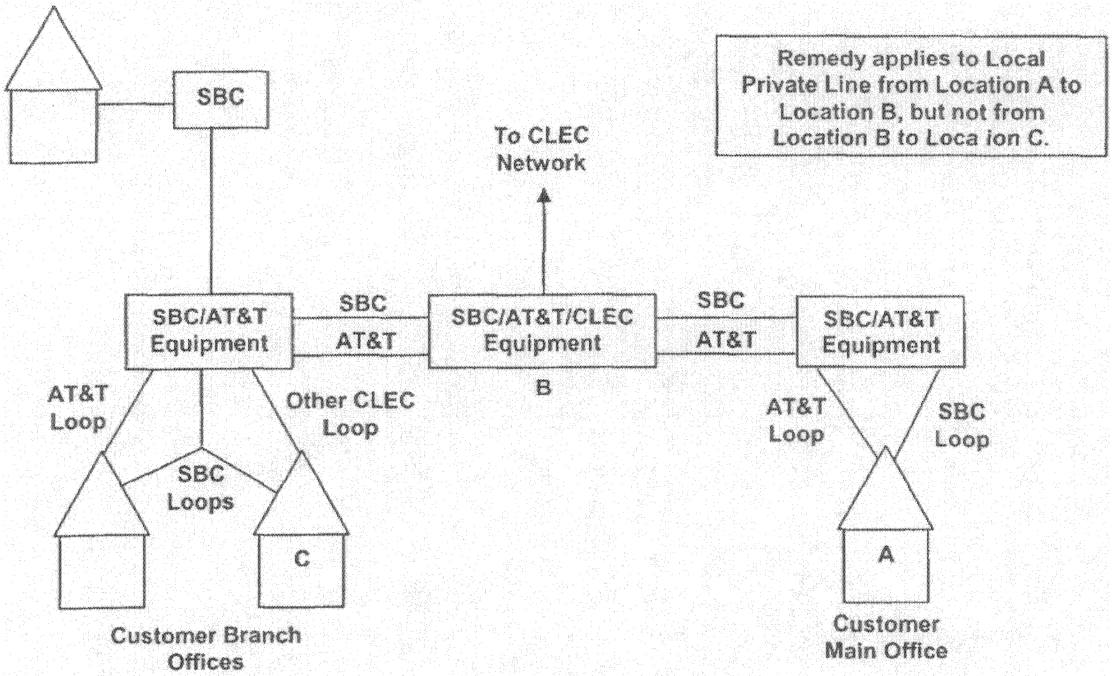

FIGURE 3

This problem cannot be argued away by suggesting that there is a great deal of duplicative transport circuitry in each metropolitan area. This kind of areawide analysis would also show a plethora of duplicative loops in each metropolitan area. But the Government has decided that this type of areawide analysis is inappropriate. Instead, the Complaint elects to analyze each Local Private Line individually in order to assess the effect of the mergers on competition. The Government conducts this analysis for the loop components of the Local Private Lines on a segment-by-segment basis and must therefore do the same for transport. A change in methodology for transport would undermine the integrity of the Government's loop analysis.

It is impossible to say, from the public record, precisely how often a ''2 to 1'' reduction in transport circuit providers occurs. But this much is known. SBC itself has acknowledged that there are numerous situations in which AT&T is likely positioned as the only facilities-based competitor for a group of transport circuits around on SBC wire center.[11] The actual bid data submitted by ACTel members to the Department of Justice is even more compelling. These data sets reflect carriers that actually have transport circuits to sell to the wholesale market (some carriers may have transport circuits filled entirely by their own traffic). The data contains numerous examples in which SBC and AT&T (or MCI and Verizon) were the only competitors on a particular transport circuit. Indeed, the data shows that AT&T and MCI are far and away the leading CLEC suppliers of transport circuits to the wholesale market.

In short, then, although the transport circuit from the carrier's network to the splice point for the loop goes from two facilities-based competitors to one, the ''remedy'' will not provide relief unless the loop circuit from the end of the transport segment to the destination building also goes from ''2 to 1.'' Frequently, however, the merger will not result in a true ''2 going to 1'' situation for the loop segment connecting the splice point to the building. Sometimes, for example, there might be only one supplier of the loop to begin with, SBC, but price regulation by the FCC prevents SBC from raising the rate on the loop to higher than competitive levels. However, the connecting transport circuit is likely not under a similar FCC constraint. The merged company could therefore raise the price of the Local Private Line from

[11] SBC has admitted in the public record that there are scores of wire centers in which AT&T is SBC's only competitor. *See* letter from Gary L. Phillips of SBC to Ms. Marlene Dortch of the FCC filed as an ex parte communication on August 12, 2005, In the Matter of Applications for Consent to Transfer of Control of Licenses and Section 214 Authorizations from AT&T Corp., Transferor, to SBC Communications Inc., Transferee, WC Docket No. 05–65, Federal Communications Commission. But even this may understate the number of transport circuits for which AT&T and SBC are the only competitors because AT&T's expert has also admitted in the public record that the presence of smaller competitors at other SBC wire centers does not necessarily indicate ownership of transport circuits in competition with SBC. *See* Carlton Dec. ¶54.

the carrier's network to the destination building by using its ''choke hold'' over the transport segment of that Line.

Nor is this problem confined to a situation in which there is only one supplier of the loop going from the transport segment to the building. If there are three suppliers of the outbound loop, for example, the divestiture remedy would not apply at all. Nor would the divestiture remedy apply if the two suppliers of the loop were carriers other than both AT&T and SBC. (*See* Figure 3) In each such case, the remedy does not apply, but the merged company can create precisely the anticompetitive injury identified by the Complaint because of its ''choke hold'' over the transport circuit from the carrier's network to the splice point.[12]

The Government's solution fails to remedy the injury identified in the Complaint because the solution applies, by its own terms, only to loops connecting buildings to networks, but not to transport connecting networks to each other. Even assuming the relief proposed in the Proposed Final Judgment is effective for transmissions *to* a carrier's network, transmissions *from* that network to terminating buildings will still be subject to the ''2 to 1'' choke hold because the Government's remedy does not include transport (unless it is attendant to a divested loop for a building).

The Proposed Judgment Does Not Produce the Promised Remedy Because the Judgment Does Not Eliminate the Anticompetitive Effects of the Acquisitions

The Government's remedy only addresses certain ''2 to 1'' loop situations. The most serious problem with the proposed ''remedy'' is that the remedy simply cannot logically or factually ''eliminate the anticompetitive effects of the acquisition of Local Private Lines,'' the claim made in the Competitive Impact Statement. *See* FR at 74348. The Complaint also focuses on Local Private Lines, defining the relevant product market as ''Local Private Lines,'' not loop segments going from two choices to one. Under the 2004 amendments, Tunney Act review must therefore consider the impact of the remedy on that very market. The Government's remedy might at best ''eliminate'' certain ''2 to 1'' loop situations, but the remedy does not ''eliminate the anticompetitive effects of the acquisition of Local Private Lines'' because there are many ''anticompetitive effects'' in Private Line situations beyond ''2 to 1'' loops.

The Complaint correctly points out that AT&T competes with SBC and MCI competes with Verizon pervasively across the metropolitan areas at issue—not just at ''2 to 1'' buildings. Complaint at ¶11. In fact, according to the Complaint, AT&T and MCI are the most significant competitors for SBC and Verizon *See* at 17. Id. The actual bid data produced by wholesale purchasers of Local Private Lines confirms precisely what the Complaint charges: AT&T and MCI are by far the most significant competitors of SBC and Verizon in the Local Private Lines market, and competition by AT&T and MCI produces lower Local Private Line prices in all competitive situations—not just ''2 to 1'' loop situations.

Moreover, the actual bid data produced by purchasers of Local Private Lines demonstrates exactly what common sense and economic theory suggest—that four competitors offering a particular Local Private Line produce lower prices than three competitors. And three competitors produce lower prices than just two competitors. Of course, the data also show that two competitors produce lower prices than a single vendor, but no one could rationally suggest that merely addressing the latter situation will do what the Competitive Impact Statement and Complaint indicate—elimination of the anticompetitive effects of the acquisition of Local Private Lines.

If the Government's Complaint and Competitive Impact Statement purported to remedy ''only a small portion of the competitive injury caused to the Local Private Line market,'' at least the documents would be internally consistent. But the Final Judgment remedy addresses only certain ''2 to 1'' loop situations, while the Complaint and Competitive Impact Statement claim to ''eliminate'' the anticompetitive effects of the acquisitions on Local Private Lines—claims that are not only inconsistent with the Proposed Final Judgment, but also with the data gathered by the Government's investigation.

The Government's failure to address anything other than ''2 to 1'' situations, while at the same time claiming to ''eliminate'' the anticompetitive aspects of the acquisitions, runs afoul of the 2004 Tunney Act amendments. Moreover, the Government's actions in these cases are a marked departure from long-established Antitrust Division practices. Remedying only ''2 to 1'' situations prevents only ''mergers to monopoly.'' The Final Judgment remedy does not prevent the competitive injury caused by lessening competition (''4 to 3'' or ''3 to 2'') in highly concentrated but not monopoly situations. For decades, there have been those who have argued that only ''merger to monopoly'' situations should be remedied by the Antitrust Division, but the Division for the entire period of time, on the basis of sound economics, has adopted both written Guidelines and consistent practices that recognize the competitive injury caused by reducing competition—even if the reduction is not the elimination of all but a single vendor. Yet the Government in this case does an about-face and precludes only ''merger to monopoly,'' without any public discussion of this most significant departure from established and documented procedures.

Furthermore, AT&T and MCI are the most significant and effective competitors to the acquiring companies. *See* Complaint ¶ 17. As the Government has long recognized, acquisitions that eliminate the most formidable competitors, leaving only less effective or ineffective competition, are anticompetitive and must be remedied. Yet in this case the Government assumes that the carrier purchasing the divested assets from the merging companies will be an effective competitive substitute for AT&T or MCI merely because the purchasing carrier has a ''viable, ongoing telecommunication business.'' Proposed Final Judgment § IV H. Given that AT&T and MCI are the most significant competitors for SBC and Verizon, there is no basis for the assumption that any acquiring carrier will be even a remotely effective competitor. All competitors are not equally effective; merely giving customers a second choice does not mean that the second choice is meaningful. The Government's prior practice recognized these facts, but the current proposal is to the contrary.

Finally, and most significantly, the proposed remedy denies widely accepted principles of network economics that the Government has long recognized in its Guidelines and practices. AT&T and MCI were the most effective competitors of the acquiring companies because of the breadth of the AT&T and MCI networks and the robustness of their customer base in terms of network traffic. It was these factors, not the presence of AT&T or MCI on a particular loop circuit, that made those companies effective competitors. These factors enabled AT&T and MCI to offer loop and

[12] The data sets submitted by ACTel members to the Government contain numerous examples of all three situations described in the text: (a) SBC as the only supplier of a loop circuit under UNE pricing; (b) three suppliers of a loop circuit; (c) two suppliers of a loop circuit, but not both SBC and AT&T.

transport circuits to wholesale purchasers at lower prices than other carriers. The fact that a ''viable, ongoing telecommunications business'' will purchase divested lines does not in any sense mean that those lines will be offered to the wholesale market at the same low prices at which AT&T and MCI sold the lines.

Given that the acquiring company is certain to be significantly smaller than AT&T or MCI (as the Complaint indicates at ¶17), the only rational inference is that the prices for the lines will go up and competition will be damaged, even if two carriers present choices on ever loop circuit. Of course, this conclusion does not merely rest on rational inferences or even on the allegations in the Complaint. Data gathered by the Government during its investigation demonstrate that AT&T and MCI were far and away the low price sellers for Local Private Lines at wholesale, and the prices for such lines will increase enormously in the future. The Government's proposal does not remedy those facts; it does not even address them.

A Truly Effective Remedy Will Produce No Loss in Efficiency

The Complaints correctly state that AT&T's local networks (every single loop and transport circuit in every metropolitan area) are wholly redundant with those of SBC. Complaint ¶¶11, 12–17. MCI's local networks (every single loop and transport circuit in every metropolitan area) are wholly redundant with those of Verizon. Even the most modest *effective* remedy would include the divestiture of all of the redundant loop and transport circuits Such a divestiture might at least enable the acquiring carrier to offer a significant competitive alternative to the merged corporations.

Even assuming that the mergers produce some efficiencies by combining the local networks of SBC and Verizon with the long-distance networks of AT&T and MCI, a divestiture of all redundant local assets would not interfere at all with the realization of the claimed efficiencies. It would, on the other hand, produce a viable competitor for local traffic without sacrificing any benefit the mergers allegedly produce.

To make the divestitures competitively effective, the Government should enable any customer under an old contract to the merging companies to solicit and accept new, post-divestiture competitive offers. Otherwise, the divestitures will not provide any benefits to existing customers of the merging companies.

And, as both an interim step and a more complete remedy if the Government is not going to require any meaningful divestitures, the Government should, at a minimum, expressly prohibit the merged companies from raising prices to anticompetitive levels in the wholesale market for Local Private Line services. This is a remedy recently adopted by the Commonwealth of Virginia's State Corporation Commission in response to public protests and concerns regarding the impact of the loss of an ''independent MCI'' on the provision of local services to mid-sized business customers in Virginia. *See* Order Granting Approval, Virginia State Corporation Commission, Oct. 6, 2006, at 27.

Following a thorough staff investigation, public hearings and written submissions, the Virginia Corporation Commission required MCI, post-merger, to continue to offer wholesale customers in Virginia private line loop and transport facilities ''at pre-merger terms and conditions and at prices that do not exceed pre-merger rates.'' Id. The Commission made this order applicable to both ''existing and future wholesale customers of MCI in Virginia'' thereby preserving a wholesale market for Local Private Lines in Virginia at competitive rates. Id. at 27. The order is to remain in effect until the loss of MCI as a competitor will no longer raise rates on Local Private Lines to an anticompetitive level. Id.

This remedy is currently in effect in Virginia and must be obeyed by the merging companies. Extending the remedy nationwide would in no way prevent the merging parties from fully exploiting any efficiencies the merger might produce. However, a nationwide remedy of this type would prevent the merged companies from gouging their wholesale customers with higher than competitive rates. Unless the merged companies have the intention to raise prices post-merger, it is difficult to see any objection to this remedy.[13]

Conclusion

The whole point of a divestiture remedy is to permit a free market solution (after the divestiture) to resolve the concentration issues created by the merger. But the divestiture remedy proposed by the Government has no hope of achieving that result. At a minimum, facilities need to be divested in operating units over wide areas, probably nationwide, and at the very least regionwide, to enable the competitive carrier acquiring the assets to have even a reasonable chance to replacing the competitive pricing from MCI and AT&T lost by the acquisitions. And the wholesale market needs to be protected with interim pricing provisions while these divestitures become competitively effective.

From the perspective of remedies, the acquisitions now before the Courts bear a strong resemblance to the Government's controversial clearance of Thomson's acquisition of West Publishing Company a decade ago. There, as here, the greatest concern was that the acquisition would put the two principal competing systems (here, the competing local networks) under common ownership. There, as here, counsel for the merging companies argued for piecemeal divestiture properties, rather than something more substantial.

In the West deal, the Government adopted the approach sought by the merging companies, requiring divestiture of piecemeal properties, rather than a comprehensive set of properties that could be used in the marketplace to actually produce competitive benefits. The result, in terms of antitrust enforcement, was a wholly ineffective remedy. *See,* e.g., John E. Morris, How the West Was Won, The American Lawyer, September 1996. The District Court ultimately approved the remedy with modifications, but under the constraint of the Court of Appeals authority subsequently repudiated by Congress. *See United States* v. *Thomson Corp.* and *West Publishing Co.,* 949 F. Supp. 907 (D.D.C. 1996).

The American Lawyer characterized the West Settlement process as a ''microanalysis of competition'' in which the Government became ''obsessed with the competing seedlings and overlooked how the giants of the forest can block out the light,'' attributing this result to the actions of Thomson's lawyers in deftly maneuvering the merger through the government review process.''

In the years following the consummation of the West acquisition, prices to customers rose dramatically, just as critics predicted, producing further criticism of the Division's

[13] The FCC provided price protection to existing customers under contract with the merging parties for a short period of time after the mergers. But the FCC remedy does not preserve a competitive wholesale market. Rather, by only protecting existing contracts and not bids to new customers, the FCC simply postponed the date at which the merging parties will be able to raise their customer's prices.

decision.[14] And when it came to light that the Division's clearance of the deal coincided with extensive political maneuvering, criticism reached both the largest mass circulation media [15] and even the most prestigious legal publications. *See,* e.g., Mark Hansen, *A Question of Influence,* 83 American Bar Association Journal 36, June 1997.

There is much in the current situation to suggest precisely these concerns—the very concerns voiced by Congress is overruling the District of Columbia Circuit in 2004—''political pressure to enter into a 'sweetheart settlement.' '' [16] Department of Justice clearance of these telecommunication acquisitions followed extensive lobbying by the merging companies of both the Administration and Congress. Indeed, the acquisitions were brought to a head and cleared by the Antitrust Divisions at a time when there was not a confirmed head of that group—when the Administration's designated Assistant Attorney General was awaiting confirmation and was subsequently under Senatorial ''hold'' because, according to the press, of his more serious enforcement mentality.

There is no reason to repeat the problems of West/Thomson. Remedial relief can be achieved in these cases with minimum disruption and inconvenience to either the merging companies or business customers.

Attachment 2—Comments of COMPTEL

Pursuant to the Antitrust Procedures and Penalties Act (i.e., the ''Tunney Act''),[1] COMPTEL hereby files these comments explaining why the Proposed Amended Final Judgments (PAFJs or PAFJ) resolving simultaneous Complaints filed by the United States to prevent the acquisition of AT&T Corp. by SBC Communications Inc., and the acquisition of MCI, Inc. by Verizon Communications, Inc. do not replace the competition lost from the elimination of AT&T and MCI as the two most significant competitors to SBC and Verizon.[2] Because the PAFJs do not address the harm alleged by the DOJ in the Complaints, entry of the PAFJs is not in the public interest. Therefore, absent significant amendment of the PAFJs, the Court will have no option but to reject the PAFJs as filed. The DOJ has the ability to recognize the deficiencies in the PAFJs at this stage of the proceedings. These comments are intended to elucidate the short-comings of the PAFJs and facilitate a more appropriate ''divestiture.'' COMPTEL's members are the primary remaining customers and competitors of the surviving entities of the respective mergers, and, therefore, have a strong interest in securing appropriate divestiture relief.

Introduction

The simultaneous acquisition of the nation's largest local competitors by the two largest incumbent providers should have initiated one of the nation's most extensive antitrust inquiries. Instead, as COMPTEL explains below, the DOJ has failed to fully recognize the anticompetitive effects of the merger in the single product market for which it has chosen to bring suit—the market for dedicated intra-city transmission services, typically referred to as ''Special Access'' or ''Local Private Line''—and has devised a remedy that directly conflicts with, and falls woefully short of, the basic tenants of its own Merger Remedy Guidelines and the mandates of Supreme Court precedent to restore competition to the level prior to the merger.

The Tunney Act governing this proceeding was adopted to ensure that the settlements of civil antitrust suits by the Department of Justice are in the public interest. Congress specifically amended the Tunney Act in 2004 to emphasize that it expected an independent judiciary to oversee proposed settlements to ensure that the needs of the American consumer were met. Implementing Congress' unequivocal reaffirmation of the Tunney Act's requirement of independent judicial scrutiny is critical in the review of these simultaneous—and competitively interrelated—mergers that will reconcentrate the telecommunications market to a level unseen since the AT&T divesture just over twenty years ago. By permitting these mergers to occur with minimal or no modifications to the PAFJs, the DOJ is effectively reversing that historic divestiture. As he implemented the Tunney Act in that original AT&T case, Judge Greene admonished that:

> [i]t does not follow * * * that courts must unquestionably accept a proffered decree as long as it somehow, and however inadequately, deals with the antitrust and other public policy problems implicated in the lawsuit. To do so would be to revert to the ''rubber stamp'' role which was at the crux of the congressional concerns when the Tunney Act became law.

U.S. v. *American Telephone and Telegraph*, 552 F.Supp. 131, 151 (D.D.C. 1982), aff'd *sub nom., Maryland* v. *U.S.*, 460 U.S. 1001 (1983).

In the comments that follow, COMPTEL explains that the proposed settlements of these mergers blindly ignore *both* the DOJ's Merger Guidelines and Merger Remedy Guidelines. In order to demonstrate that the proposed settlements serve the public interest, the DOJ must present a clear and compelling explanation as to how its proposed remedies have any hope of restoring the competition that will be lost by these dominant firms each acquiring their largest competitive rivals. The remedies crafted by the DOJ are not sufficient to restore competitive conditions the merger would remove; they do not promote competition (but they do protect the largest, post-merger ''competitors,'' SBC and Verizon); and they lack sufficient clarity and specificity to be enforceable. As currently crafted, the proposed consent decrees are not in the public interest.

II. Summary of Complaint

Any conventional antitrust analysis begins by defining the relevant product and geographic markets. In its complaints here, however, the DOJ adopts a clear definition of only the product market, while dismissing the importance of correctly establishing the geographic market. As COMPTEL explains, the DOJ's failure to identify the relevant geographic market is one of the reasons that its proposed remedy cannot plausibly be expected to restore competition to pre-merger levels.

A. The Product Markets

The Government defines two product markets: (1) ''Local Private Lines'' (more commonly referred to as ''special access''), and (2) the retail voice and data telecommunications services that rely on Local Private Lines. Complaint at ¶ 19. The DOJ describes ''Local Private Lines'' as dedicated, point-to-point circuits offered over copper and/or fiber optic transmission facilities (copper or fiber wires), and notes that the Bell monopolies use the term ''special access'' to refer to this product market. Complaint at ¶ 13.[3]

[14] *See,* e.g., Susan M. Ryan, Cost Inflation by Page Reductions, 14 The Bottom Line: Managing Library Finances, No. 1, at pp. 6–11 (2001); Douglas McCollam, Volumes Are Giving Way to Velocity, 25 National Law Journal, No. 46 at S1, July 14, 2003.

[15] *See,* e.g., Brooks Jackson, Moving Money Through State Capitals, CNN, April 11, 1997; *http://www.cnn.com/ALLPOLITICS/1997/04/11Jackson/;* Viveca Novak and Michael Weisskopf, The *http://www.cnn.com/ALLPOLITICS/1997/04/14/time/novak.html:* Mark Hansen, A Question of Influence, 83 A.B.A.J. 36, June 1997.

[16] 150 Cong. Rec. § 3617, *supra.*

[1] 15 U.S.C. 16(b)–(e).

[2] Although AT&T and SBC are now known as AT&T (while Verizon retained its name after its acquisition of MCI), we refer to each by their pre-merger names in these comments (unless otherwise indicated) to avoid confusion.

[3] The term ''special access'' is a byproduct of the initial AT&T divestiture. The basic structure of the

For the first product market—Local Private Lines or Special Access [4]—the DOJ provides some description of the competition foreclosed by the merger. The Complaint against SBC and AT&T, for example, notes that SBC dominates this market with $4.4 billion in sales in 2004, as compared to AT&T's local private line revenues (as one of SBC's largest competitors) of $0.09 billion in the SBC region. Complaint at ¶ 20.[5] The Complaint does not indicate what portion of SBC's $4.4 billion in sales are *to* AT&T—indeed, the complaint does not even acknowledge that two of the largest purchasers of special access are the acquired firms—or whether any of these circuits are then combined with AT&T's own facilities and resold to other carriers or business consumers. However, it is certain that these sales are significant in size [6] and competitive implication.[7]

The Complaint further explains that one ''element'' of Local Private Line service is the so-called ''loop'' or ''last mile'' which is the portion of copper—more likely, fiber—that provides the dedicated connection from one part of the network to the end-user's building. Complaint at ¶ 12. What is not explained in the Complaint is that there are other elements of special access service that must typically be purchased in order for the special access line to be commercially useful. The other principal element of special access service is ''transport.'' Transport is the transmission component typically used to collect ''loop'' traffic at one point on the network and transport that traffic to another point on the carrier's network.[8]

The second product market that the Government alleges will be harmed as the result of this merger is the market for retail voice and data telecommunications services that rely on special access. The DOJ provides no discussion as tot he value of this market, or the relative market shares of the relevant firms within the territories served by SBC and Verizon. This fundamental failure in analysis makes an appropriate Tunney Act public interest determination very difficult, if not impossible. While the DOJ makes no effort at all to describe the size of this market, it is clearly substantial.[9] Thus, restoring competition lost as the result of the elimination of such a significant competitor would likely demand a significant divestiture of a cognizable business unit. It is not surprising that the DOJ chose not to provide any specifics on this product market, given the extremely limited value of the ''divestitures'' the decree proposes.

B. The Geographic Market

Despite its analytical significance, the DOJ fails to clearly identify the relevant geographic market for special access (and the retail services that rely upon it). Rather, the DOJ merely notes that the relevant geographic markets for both product markets are ''no broader than each metropolitan area and no more narrow than each individual building.'' Complaint at ¶ 24. Importantly, as COMPTEL explains below, the DOJ's analysis ignores the significance of regionwide contracting strategies in its analysis of geographic markets entirely, and has designed a building-specific remedy approach without offering any convincing explanation as to why a building-specific market definition is preferred to its metropolitan area alternative.

To begin, focusing ''solely on demand substitution factors—i.e. possible consumer responses'' [10]—within the reality of the special access/Local Private Line market, it is difficult to understand how the DOJ could define a geographic market as narrowly as an individual building. As an initial matter, the only customers for whom this could be true would be customers whose demand was individually large enough to stimulate alternative entry,[11] but whose total demand was sufficiently concentrated in that specific building for it to be willing to contract for service in that individual building alone.[12] Yet, the DOJ has made no allegation that SBC (or Verizon) pre-merger, or post-merger, engage in building specific price

Modified Final Judgment (MFJ) implementing the AT&T divestiture was the structural separation of AT&T's intercity long distance operations from its local exchange operations. In order for AT&T and other long distance carriers to meet the specialized needs of very large business customers, they would need to lease local transmission facilities from the divested Bell Operating Companies (such as Verizon and SBC) to connect to large users. These connections were referred to as ''special access'' because they were used to connect specific, individual business customers to the long distance carrier's network and were designed to be used where the customer had large volumes of data and/or voice traffic.

[4] As the DOJ notes, Verizon and SBC generally use the term ''special access'' to refer to Local Private Lines. Complaint at ¶13. This term is more commonly used by the industry because the principal use of such facilities is a wholesale input to another carrier that provides retail service to the customer. (While some business customers purchase Local Private Line services, the primary customers for Local Private Line are other carriers. Complaint at ¶23.) Because the term ''special access'' better captures the predominant use of such facilities, and because it is term more commonly used by the industry, COMPTEL will generally use the term in these comments in place of the DOJ's ''Local Private Line'' nomenclature.

[5] Similar allegations are made against Verizon and MCI.

[6] While we do not know with specificity the actual dollar volume of AT&T's purchases of SBC special access, we do know that they have a minimum commitment level of $765 million in special access purchases form SBC. See AT&T ex parte at 5, filed with the Federal Communications Commission in RM–10593 November 9, 2004. A copy of AT&T's submission is attached as Appendix A.

[7] COMPTEL explains later in these comments that the proposed merger creates a unique interrelationship between Verizon and SBC. By acquiring the special access contracts of AT&T and MCI (the largest purchasers of special access), Verizon and SBC will become one of each other's largest competitors and customers. Because both Verizon and SBC must rely heavily on inputs (i.e., special access) acquired from one another to compete with each other, both carriers have built-in supply mechanisms that monitor the competitive output of the other, providing a very real danger of coordinated pricing. In addition, special access contracts have volume-discounted pricing schedules that discourage each firm from using competitive input suppliers even when they are available. Notably, the DOJ's competitive analysis completely ignores the competitive symbiosis between SBC and Verizon that the mergers will create.

[8] For example, a carrier might use a loop-transport-loop service connecting Georgetown University's Law School on Capitol Hill with its main campus in Georgetown (2 ''end points'' with transport in the middle). Alternatively, a wireline carrier might provide only transport (i.e., no loops to a retail customer) between a cell site tower and a mobile telephone switching center.

[9] For instance, AT&T earned $22.6 billion in business revenue in 2004. The fact that approximately ⅓ of the nation's total access lines are in the territory served by SBC suggests that the value of retail voice and data communications that rely on private lines provided by AT&T are worth approximately $7 billion. SBC's retail business revenues from voice and data communications are likely to be equally as large as AT&T's. Commenters should not, however, have to estimate this information. It needs to be provided by DOJ to permit an appropriate review of the PAFJs. The Verizon/MCI PAFJ is equally deficient in providing necessary data to perform a meaningful competitive analysis.

[10] Merger Guidelines, Section 1.0.

[11] AT&T has previously explained that it would need over 2,016 voice grade lines (which is the voice grade equivalent of a small fiber-system known as an OC–3—in an individual location in order to justify building facilities into that location. AT&T Petition for Rulemaking To Reform Regulation of Incumbent Local Exchange Carrier Rates For Interstate Special Access Services, Reply Declaration of Janusz A. Ordover & Robert D. Willig on Behalf of AT&T Corp. at ¶ 29, filed with the Federal Communications Commission in RM–10593 on January 23, 2003.

[12] Most customers do not typically contract for special access-based services on a building-by-building basis. Rather, as SBC has explained to the FCC, ''the overwhelming majority of special access circuits are purchased by customers that bargain for substantial term, volume, and overlay discounts.'' SBC Reply Comments at 26, filed with the Federal Communications Commission in the Matter of Special Access Rates For Price-Cap Local Exchange Carriers, WC Docket No. 05–25 on July 29, 2005 (internal citations omitted). Moreover, [t]hese contract tariffs vary in their scope, covering a single MSA, multiple MSAs, or SBC's entire service territory.'' SBC Comments at 53 n.176 filed with the Federal Communications Commission in In the Matter of Special Access Rates For Price-Cap LECs, WC Docket No. 05–25 on June 13, 2005.

discrimination.[13] Nor is COMPTEL aware of any evidence that would support a geographic market definition that narrow and the Competitive Impact Statement filed with the PAFJs does not provide any such evidence. Indeed, in COMPTEL's experience, the fact that Verizon and SBC offer special access service on state or regionwide volume discount schedules suggests that it is more likely that the appropriate geographic market is actually broader than the metropolitan area alleged by the DOJ (and cannot plausibly be considered to be as small as an individual building).[14] As explained by former DOJ and FCC chief economist Joseph Farrell:

> 15. I understand that, today, SBC's pricing does not fully respond to such granular competitive conditions, building by building, and that SBC is content to price well above CAPs [Competitive Access Providers] where it does face CAP competition and offers substantial discounts in return for region-wide commitments to give SBC not simply a large amount of business but a large share of the carrier's business.
>
> 16. Such a pricing practice links special access pricing in different buildings, and—while it persists—argues for a region-wide market definition because (as I explain below) it can make region-wide concentration a more important determinant of competitive behavior and overall pricing than concentration and entry possibilities specific to a building or route.[15]

C. Anticompetitive Effect

In two brief paragraphs, the DOJ posits that the primary anticompetitive effects of the two largest local Bell monopolies acquiring their two largest competitors will be felt in those few buildings where the number of carriers serving the buildings with their own fiber or copper transmission facilities will decline from two to one. The DOJ explains that even though other competitors might still be able to resell private lines from SBC, these competitors would not be as effective at constraining the post-merger firm's prices to customers, because the merged firm will control the price of a critical input. Complaint at ¶ 25. According to the Complaint, this anticompetitive effect (reduced competition in a limited number of buildings) will not be limited to the market for ''raw'' special access service (unadorned transmission services), but will also distort prices in the market for ''finished'' telecommunications services (i.e., switched voice or managed data/Internet service) that use private lines as a critical input. Complaint at ¶ 26. As we discuss below, however, the PAFJs not only do not remedy this anticompetitive effect, but rather may actually exasperate it.

The Merger Guidelines are primarily concerned with entry from the perspective of whether it is reasonable to expect that a post-merger, unilateral increase in price would be met with entry that is timely enough, reasonably likely, and on a sufficient scale to defeat the hypothetical price increase. In the Complaints, the DOJ states that other carriers are unlikely to replicate AT&T's last mile connections into the few buildings for which the merged firm has consented to make unused capacity available. The DOJ explains that carriers decide whether to build last mile facilities based on several factors:

a. The proximity of the building to the CLEC's existing network interconnection points;
b. The capacity required at the customer's location (and thus the revenue opportunity);
c. The availability of capital;
d. The existence of physical barriers, such as rivers and railbeds, between the CLEC's network and the customer's location; and
e. The ease or difficulty of securing the necessary consent from building owners and municipal officials.

Complaint at ¶ 27. COMPTEL does not disagree that the point listed above are barriers to entry; nor does COMPTEL disagree that entry—by either the last mile or transport facilities—would not be sufficient or sufficiently timely to defeat a post-merger increase in price.

However, COMPTEL must point out that the entry barriers the DOJ identifies are by no means exhaustive. It is well recognized that dedicated, high-capacity telecommunications networks are characterized by substantial economies of scale and scope.[16] Moreover, the ''sunk'' aspect of the high capital costs that are characteristic of competitive fiber deployment are additional entry barriers.[17]

Importantly, however, these and the other barriers the DOJ identifies are similar for all transmission facilities, regardless of whether they are ''loops'' or ''transport;'' and the inability of entry to defeat a post-merger price increase in the metropolitan area is just as much (actually more) of a danger than the threat of building-specific price

[13] Normally, the DOJ would only define geographic markets this narrowly if a ''hypothetical monopolist'' could identify and price differently to buyers in these buildings. See Merger Guidelines, Section 1.22 ''Geographic Market Definition in the Presence of Price Discrimination.''

[14] Although the correct geographic market definition is probably the entire SBC or Verizon region, for purposes of this filing, COMPTEL will adopt the largest geographic market asserted by the DOJ in its Complaint (the metropolitan area) when evaluating the adequacy of the DOJ's remedy. Complaint at ¶ 24.

[15] Statement of Joseph Farrell attached to the Opposition of Global Crossing filed with the Federal Communications Commission in In the Matter of SBC/AT&T Merger, WC Docket No. 05–65 on April 25, 2005. For the convenience of the DOJ, COMPTEL includes Professor Farrell's observations regarding the proper geographic market definition. A copy of the Statement is attached hereto as Appendix B.

[16] In one of the early antitrust cases, this Court determined with respect to the local private line service offered by AT&T pre-divestiture, ''that there are three reasons for defendants having achieved such clear economies of scale. First, as defendants' witnesses explained, higher levels of demand allow efficient use of high-capacity facilities and technologies which provide transmission service at progressively lower unit costs. Second, the process by which the network is configured allows for the fullest utilization of these high-capacity, low-cost facilities. Finally, defendants supply the entire spectrum of communications services, and through the networking principle, demand for all those services is concentrated or pooled so that it can be transmitted and switched over the same facilities. This last phenomenon is referred to by economists as ''economies of scope''. Economies of scope exist when it is cheaper to produce two or more goods or services together than to produce each one separately. *Southern Pac. Communications Co. v. American Tel. & Tel. Co.,* 556 F. Supp. 825, 861–862 (D. D.C. 1982). As notes above, with SBC's acquisition of AT&T, the pre-divestiture AT&T has been substantially reconstituted. Furthermore, the FCC has found that ''Scale economies, particularly when combined with sunk costs and first-mover advantages * * * can pose a powerful barrier to entry. If entrants are likely to achieve substantially small levels of sales than the incumbent, then with scale economies their average costs will be higher than those of the incumbent, putting them at a potentially significant costs disadvantage to the incumbent. Profitable entry may not be possible if retail prices are close to the incumbent's average costs. The greater the extent and size of the scale economies throughout the range of likely demand, the higher the barrier they pose.'' In the Matter of Review of the Section 251 Unbundling Obligations of Incumbent Local Exchange Carriers, Report and Order on Remand, 18 FCC Rcd. 16978 at ¶ 87 (2003), vacated in part (on other grounds), aff'd in part and remanded sub nom. *United States Telecom Association* v. *Federal Communications Commission*, 359 F.3d 554 (D.C. Cir. 2004), cert. den. sub nom. *AT&T Corporation* v. *United States Telecom Association,* 125 S. Ct. 316 (2004).

[17] The existence of high, or proportionately high, sunk costs is generally recognized as a barrier to entry. See, e.g., Larson, An Economic Guide to Competitive Standards in Telecommunications Regulation, I CommLaw Conspectus 31, 52 (January 2000) (''if entry requires the incurrence of capital costs, and a 'high' proportion of these are sunk costs for entrants, then entry barriers exist.'' (c.f., Bolton, Brodley, and Riordan, Predatory Pricing: Strategic Theory and Legal Policy, 88 Geo. L.J. 2239, 2265 (August, 2000) (''if challenged by new entry, the incumbent will rationally disregard such [sunk] costs in its pricing decisions rather than lose the business. The entrant * * * must now incur such costs, and therefore faces risk of underpricing by an incumbent with sunk costs. Thus, as a result, sunk costs may act as an entry barrier, giving the incumbent the ability to raise price above the competitive level.'') The FCC has specifically found that ''[s]unk costs, particularly when combined with scale economies, can pose a formidable barrier to entry.'' In the Matter of Review of the Section 251 Unbundling Obligations of Incumbent Local Exchange Carriers, Report and Order on Remand, 18 FCC Rcd. 16978 at ¶ 88.

increases. (As COMPTEL has explained, the DOJ has not offered any evidence that building-specific pricing by SBC and Verizon is the norm). Consequently, while the DOJ has recognized that the conditions for post-merger price increases are present, it has failed to fashion any reasonable remedy that would prevent such increases from occurring.

III. The Proposed Divestitures Will Not Restore Competition

The formal policy guidance to the Antitrust Division regarding merger remedies is contained in the Antitrust Division Policy Guide to Merger Remedies [''Merger Remedy Guide'']. [18] In this policy statement, the Antitrust Division sets forth broad principles that it claims will guide its decisions to seek remedies to offset potential harms to competition resulting from mergers. A controlling policy principle is that ''restoring competition is the 'key to the whole question of antitrust remedy.' '' [19]

Importantly, the goal of restoring competition is not a policy choice made by the DOJ. Rather, it follows from the guidance provided by the Supreme Court that ''relief in an antitrust case must be efffective to redress the violations and 'to restore competition' [and that] * * * [c]omplete divestiture is particularly appropriate where asset or stock acquisitions violate the antitrust laws.'' *Ford Motor* Co. v. *United States,* 405 U.S. 562, 573 (1972); accord *United States* v. *E.I. du Ponte de Nemours & Co.,* 366 U.S. 316, 331 (1961); *California* v. *American Stores Co.,* 495 U.S. 271, 280–81 (1980).

The DOJ has followed this policy and precedent time and time again in divestitures across various industries including telecommunications. In previous telecommunications mergers in which the DOJ has negotiated remedies, the divested assets included not just network infrastructure, but also customer contracts, business and customer records and information, customer lists, accounts, leases, patents, licenses, and operational support systems—in essence complete operating businesses. For example, in *U.S.* v. *Cingular Wireless Corp.* et al., DOJ required the divesture of AT&T Wireless's entire mobile wireless business in the identified geographic markets to prevent the substantial lessening of competition for mobile wireless services. See *U.S.* v. *Cingular Wireless Corp. et al.*, No. 1:04CV01850, Proposed Final Judgment (D.D.C. November 3, 2004). Similarly, in *U.S.* v. *WorldCom, Inc. and Intermedia Communications*, DOJ required WorldCom to divest all Intermedia assets, except for the voting interest in Digex, as an ongoing, viable business to prevent the substantial lessening of competition in the market for Tier 1 Internet backbone services. Again, the required divestiture included customer contracts, operational support systems and each of the aforementioned assets among a host of others. *U.S.* v. *WorldCom, Inc. and Intermedia Communications*, No. 1:00CV02789, Proposed Final Judgment (D.D.C. November 17, 2000). See also *U.S.* v. *SBC Communications Inc. and Ameritech Corp.,* No. 99–0715, Proposed Final Judgment (D.D.C. March 23, 1999). (DOJ required divestiture of an entire business including the assets listed above). Most recently, only one year prior to the present mergers being field with the DOJ, the DOJ was perfectly willing to follow its own counsel in the case of Qwest—another large incumbent local exchange carrier, but substantially smaller than either SBC or Verizon—seeking to acquire Allegiance Telecom in a bankruptcy proceeding. There, the DOJ signed a consent decree with Qwest that required Qwest to entirely divest itself of all of Allegiance's in-region business.[20]

A key question underlying the DOJ's approach here is simply ''what happened?'' Why is the guidance of its Merger and Remedy Guidelines—guidance to which the DOJ has consistently adhered in merger after merger, involving firms far smaller than those being combined here—no longer relevant to its analysis? [21] As we explain below, the divestitures required under the proposed final judgments cannot plausibly restore the competition lost by the simultaneous acquisition of the nation's two largest competitors by the nation's two largest incumbents, much less do the divestitures even hint at addressing the heightened threat of coordinated pricing resulting from SBC and Verizon becoming each other's largest customer and competitor.

The DOJ's Merger Remedy Guide makes clear that the preferred course to restore competition is to divest sufficient assets to replace the competition lost by the merger, recognizing that such divestitures will likely require more than mere physical assets:

> Divestiture must contain at least the minimal set of assets necessary to ensure the efficient current and future production and distribution of the relevant product and thereby replace the competition lost through the merger. The Division favors the divestiture of an existing business entity that has already demonstrated is ability to compete in the relevant market. An existing business entity should possess not only all the physical assets, but also the personnel, customer lists, information systems, intangible assets, and management infrastructure necessary for the efficient production and distribution of the relevant product.[22]
>
> The goal of a divestiture is to ensure that the purchaser possesses both the means and the incentive to maintain the premerger competition in the market(s) of concern.[23]

Divestiture of an operating, on-going business redresses the antitrust violations and restores competition in the affected market.[24] Significantly, the ''divestitures'' required by the consent decrees are not real divestitures *at all* (as the term is used to effect a ''structural remedy'' in the Merger Remedy Guide). Rather, the proposed decrees call only for a ten-year lease of the defendant's unused fiber capacity—capacity that is dormant cannot be made useful without substantial additional investment—and which only connects to buildings where the available revenue is already locked into long-term contracts with the defendants, most likely through a contract tying the service in the named building to the customer's requirements in other locations. This temporary lease of the defendants' unused capacity to a carrier that has neither the scale nor scope of the defendants cannot restore the level of competition lost by the acquisition of AT&T and MCI.

A. A Building-Specific Remedy Is Insufficient

To begin, although the DOJ was unable to define the relevant geographic market with precision—concluding only that it was no smaller than an

[18] Antitrust Division Policy Guide to Merger Remedies, U.S. Department of Justice, Antitrust Division, October 2004. Available at *http://www.usdoj.gov/atr/public/guidelines/205108.htm*

[19] *Id.,* citing *United States v. E.I. du Pont de Nemours & Co.,* 366 U.S. 316, 326 (1961).

[20] Ultimately, Qwest was out-bid in a bankruptcy auction by XO Communications and the consent decree was not filed. The proposed consent decree is provided here as Appendix C to illustrate a divestiture approach more consistent with the public interest than that to which the DOJ has acquiesced here.

[21] COMPTEL is not so naïve as to believe that the massive size of the merged entities in these proceedings is necessarily unrelated to the Government's approach. Mergers concentrate political capital in a manner comparable to their amalgamation of economic power—a fact Senator Tunney well recognized ''[i]ncreasing concentration of economic power, such as occurred in the flood of conglomerate mergers, carries with it a very tangible threat of concentration of political power. Put simply, the bigger the company, the greater the leverage it has in Washington.'' 119 Cong. Rec. 3451 (Feb. 6, 1973).

[22] Merger Remedy Guide at 12.

[23] Merger Remedy Guide, at 9.

[24] *Id.*

individual building and no larger than a metropolitan area, the DOJ's ''remedy'' assumes that individual buildings are the appropriate measure. Moreover, the proposed final judgments only apply in those relatively few buildings where the merging parties control the only facilities serving the building (i.e., where because of the merger, the number of facility-paths to the building will go from 2-to-1). Notwithstanding the lack of any explanation of why only the ''2:1'' buildings are of concern (as opposed to circumstances where competitive choice collapses from 3:2 for instance), the DOJ's focus on a building-specific remedy assures higher prices to retail customers.

As noted earlier, COMPTEL is unaware of any market evidence that suggests that customers make purchasing decisions—or that carriers make pricing decisions—on a building-by-building basis. If customers do not make their decisions that way, and carriers do not price their services that discretely, there is no reasoned basis to conclude that the remedy can restore competition when the market has been incorrectly defined so narrowly.

In COMPTEL's experience, customers make their purchasing decisions for much broader areas that generally conform to the areas that the incumbents use to calculate volume discounts. Even if one assumes that a relatively (compared to our experience) narrow market definition of a single metropolitan area is appropriate, the only way to restore the competition lost by the mergers is to divest all of the AT&T and MCI network assets that serve each metropolitan area. Only if that were to occur, could the purchasing entrant be assured of the opportunity to offer customers service package with a similar footprint as provided by the former competitors, AT&T and MCI.

Notably, AT&T and MCI were two of the largest purchasers of wholesale special access services in the territories served by SBC and Verizon and, as such, were able to take advantage of SBC's and Verizon's volume discount pricing strategies to achieve lower special access prices than other competitors. Because large end-user customers typically contract for retail services at multiple locations, AT&T and/or MCI were able to bid on such contracts using a blend of their own facilities *and* the heavily discounted special access facilities they leased from SBC and Verizon. Consequently, even if leasing the unused capacity that exists at some of the customer's locations to other entrants (a term called for by the proposed consent decrees) was able to replicate the facilities-based competition from AT&T and MCI (a proposition with which we disagree, for other reasons that we describe here), unless other entrants also enjoyed the same discounts achieved by AT&T and MCI for the special access circuits used to form the complete bid for all of the customer's locations, the level of competition in the metropolitan area would be harmed and prices would be expected to rise.

B. The Lease of Unused Capacity Does Not Restore Competition

Another remarkable feature about the proposed consent decrees is that they only require the defendants to lease the unused capacity they may have installed to a particular building—i.e., fiber strands that today lie dormant, that would require substantial additional investment to activate, and which quite possible exceed the known demand in the building to which they are committed.

The DOJ correctly recognizes the ''CLECs will typically build into a particular building after they have secured a customer contract of sufficient size to justify the anticipated construction costs for that building.'' Complaint ¶ 28. In other words, the most common arrangement is for facilities to be installed only after a customer has made a contractual commitment of sufficient duration and magnitude to justify the cost. Remarkably, although the DOJ recognizes this circumstance, it has proposed a remedy that effectively assumes the opposite.

In each of the buildings identified by the DOJ, there are only two networks available to customers (that of AT&T and MCI and that of the incumbent). Following the DOJ's accurate observation that competitors generally do not deploy capital speculatively, it is likely that AT&T and MCI constructed their lateral connections only after obtaining a contract with the customer sufficient to recover the costs of construction.[25] As such, it is unlikely that there is sufficient uncommitted demand in any of these buildings to justify a competitor incurring the cost to access the building to become a ''third'' option.

One obvious question is why should the DOJ presume that an entrant will precommit capital (to acquire a fiber-lease from the defendants) to serve these buildings without already having a customer under contract, when the DOJ recognizes more generally that an entrant would not otherwise take such a risk? Moreover, the economic disincentive is even greater in these buildings because the entrant knows that the capital it would be committing would be to acquire capacity at levels that neither the incumbent (SBC and Verizon) nor the largest competitors (AT&T or MCI) were able to sell. The DOJ's Merger Remedies Guide recognizes that ''in markets where an installed base of customers is required in order to operate at an effective scale, the divested assets should either convey an installed base of customers to the purchaser or quickly enable the purchaser to obtain an installed customer base'' [26]

Additionally, in its Merger Guidelines, among the factors the DOJ lists that are likely to ''reduce sales opportunities'' to a post-merger entrant is ''any anticipated sales expansion by incumbents in reaction to entry, either generalized or targeted at customers approached by the entrant, that utilizes prior irreversible investments in excess production capacity.'' [27] Here, while the ''divestiture asset'' is unused capacity, it is not even all the unused capacity the post-merger firm will possess; so it is hardly unthinkable that the merged firm would not be easily able to eliminate any sales opportunity for the prospective entrant (assuming such a sales opportunity could even exist on a building-specific basis)—especially given that the new entrant (even if it acquired the unused capacity for free) will still have to incur the costs of negotiating building access, laying fiber within the building, and lighting the fiber. Yet, in this context, the DOJ has not required the defendants to divest a single customer—or even to waive the termination penalties associated with any contract that includes service in the identified buildings.[28]

C. A 10-year Lease is Not a Divestiture

Above we emphasize the fact that CLECs are unlikely to install capacity to particular building until after the customer is locked into a contract suggests that the customer demand in the buildings where AT&T has installed

[25] The FCC has found that large business customers ''demand extensive services using multiple DS3s or OCn loops typically offered under long-term arrangements which guarantee a substantial revenue stream over the life of the contract.'' In the Matter of Review of the Section 251 Unbundling Obligations of Incumbent Local Exchange Carriers, Report and Order on Remand, 18 FCC Rcd. 16978 at ¶ 303 (2003).

[26] Merger Remedy Guide at 10.

[27] Merger Guidelines, Section 3.3.

[28] So called ''fresh look'' requirements would at least permit the customers using the productive capacity that the DOJ is permitting the merged firms to retain to consider shifting their demand to the unused capacity that the DOJ would have the merged firms divest.

fiber are unlikely to be available to an entrant because of the customer's contractual commitments. A second implication is that an entrant is unlikely to want to lease dark fiber from the defendants (as assumed by the proposed consent decrees) precisely because the new entrant to the building will not have its own pre-committed customers.

Whether the entrant leases the unused capacity required to be divested by the proposed settlement—or whether it constructs the facility new, the economic condition recognized by the DOJ remains the same. Entrants are unlikely to commit capital to serve an individual building unless a customer has already committed to cover the costs of that capital expansion. The fact that some dark fiber may have been obtained through the proposed ''divestiture'' does not substantially lessen this capital expenditure—there remain significant costs to access the customer and activate the fiber so that it is capable of providing services.

The DOJ appears unwilling to appreciate the comparability between capital expenditures incurred as construction costs and capital expenditures incurred as long-term leasehold acquisition costs. The fact is that competitors generally do not deploy capital on speculation. If they do not have a contract for a satisfactory level of demand at a particular location, then they typically will not spend capital to provide facilities to that location.

The risk to invested capital used to activate any leased fiber from the defendants is particularly acute. The DOJ's consent decrees only require a relatively short lease commitment of 10 years, without any renewal option. After the lease expires, the merged companies will once again control the assets supposed to be ''divested,'' with the entrant that has leased these facilities having no clear option. In addition, without full transfer of assets, prospective lessees will have no rights to access any building without first obtaining permission from the landlord or property manager of the building. This, again, makes the ability of the lessee to serve potential customers contingent on its ability to overcome an entry barrier that the DOJ has recognized and that the defendants have overcome.[29] It is remarkable that the DOJ would identify an entry barrier (like building access), and then propose a remedy to create new entry while leaving the prospective entrant to still negotiate that entry barrier.

D. The Remedy Is Not Clear and Enforceable

Among the broad, ''guiding principles'' in the Merger Remedy Guide is the notion that an antitrust remedy should be clear and enforceable. This is also a new requirement for the Court to analyze with respect to consent decrees under the Tunney Act—whether its terms are ambiguous, and therefore, whether it is enforceable. The present consent decree is so vague and ambiguous as to be virtually unenforceable.

As an initial matter, almost all—if not all—of the critical provisions of these consent decrees are subject to subsequent agreement among the parties. The elements of the divestiture leases that are subject to ''agreement'' between the parties—pricing, splice point access, and access to dark fiber transport—are among the most contentious issues in arbitrations held pursuant to the Telecommunications Act of 1996. History has shown that competitive entrants are typically unsuccessful ''negotiating'' with the Bell companies, frequently having to resort to binding arbitration under the Telecommunications Act, 47 U.S.C. 252, even to implement basic interconnection and lease rights guaranteed by the statute and the FCC's rules implementing the statute.[30] The PAFJs do not divest independent operations that have the incentive and ability to be willing wholesalers to other competitive providers; rather, the decrees portend the same seeds for litigation that have plagued the Telecommunications Act of 1996 for a decade (and which ultimately produced these mergers in the first instance).

IV. The Proposed Remedy Increase the Likelihood of Coordinated Pricing

A. ILEC Exclusionary Contracts Are a Barrier To Entry and Facilitate Collusion Between Post-Merger SBC and Post-Merger Verizon

COMPTEL has already shown that the DOJ has not adequately described all the barriers to entry in the Local Private Line market. As we have noted, most private lines include a transport component as well as a loop component.[31] Moreover, most private lines are purchased by carriers, which combine these private lines with intelligence and other network facilities and features to create finished services that are then sold to retail customers. Thus, what little facilities competition that exists in the special access/Local Private Line market is provided by other carriers for other carriers. The barriers that these entrants—who compete directly against SBC and Verizon—face are enormous. The DOJ only lists some of the ''natural'' economic barriers to entry. There are other, artificial barriers that have been erected by the Bell companies, including defendants SBC and Verizon.

The most notable features about the special access market are that: (1) The SBC and Verizon still maintain a monopoly over the market; even the competitive carriers with the largest networks must buy over 90% of their total special access circuits (Local Private Lines) from the incumbents; (2) in the most populous markets, SBC and Verizon are no longer price regulated by the FCC; and (3) almost all of the special access circuits sold by SBC and Verizon are sold under ''optional pricing plans.''[32]

These optional pricing contracts are relevant to this proceeding for three reasons: (1) They are important to understand in order to understand proper geographic market definition; (2) they are an ongoing barrier to facilities-based competitive entry into the Local Private Line/special access market because they severely foreclose access to

[29] There is a related, yet somewhat technical, point that should also be considered. The merged firms almost certainly each have route diversity (*e.g.,* fiber coming in the front door and going out the back door). This is a valuable feature because it allows the carrier to protect its customer against service disruptions from fiber cuts (if the fiber coming into the building is cut, the carrier can simply ''re-route'' the customer's communications through the diverse fiber strand). However, there is nothing in the terms of the consent decrees that requires the post-merger firm to provide ''diverse'' fiber. Rather, the decree only requires a minimum of 8 strands to be divested. It appears that the post-merger firm could technically comply with the decree, while limiting the prospective purchaser's ability to win sales by only divesting fiber strands in the same sheath.

[30] *See* The Role of Incentives for Opening Monopoly Markets: Comparing GTE and RBOC Cooperation With Local Entrants (1999) (ILECs that do not cooperate with entrants attract less competitive entry) available at *http://econpapers.repec.org/paper/wpawuwpio/9907004.htm.*

[31] Indeed, AT&T has explained that 40,000 of its local business customers require the lowest capacity private line service—DS1 service. The vast majority of these customers—about 65%—are served via combinations of loops and transport. See AT&T Presentation, CC Docket No. 01–338, October 7, 2002, at p. 10.

[32] These ''optional pricing plans'' are an essential feature of the special access market that needs to be understood in order to understand why entry of the proposed consent decrees is not in the public interest. To this end, COMPTEL has included with its comments a detailed analysis of SBC's optional pricing plan, prepared by former DOJ and FCC chief economist Joseph Farrell. Dr. Farrell's pricing plan analysis is included as Appendix D to these comments.

customers and distort entry decisions; and (3) the continued existence of these contracts will make it even less likely that the proposed remedy will allow a new firm to take the place of AT&T—even if all of AT&T's in-region assets were divested.

The key feature of these optional pricing plans is that in order to get ''discounts'' on circuits for which they have no competitive alternative (the vast majority of their circuits) customers (like the pre-merger AT&T and MCI, and COMPTEL's members) must commit to purchasing the majority of their total circuit volumes from the Bell companies—including circuits for which a cheaper competitive alternative may be available. In other words, because only the incumbent can supply all of any customer's Local Private Line demand, the incumbent can condition the availability of discounts on certain circuits (majority, for which no competitive alternative is available) on the customer's commitment to transfer the ''competitively sensitive'' portion of its demand to the incumbent.

In this respect, the optional pricing plans—which are pervasive—act to foreclose circuit demand from potential competitors of the incumbents for Local Private Line services.[33] This feature—contracts that foreclose sales opportunities to rivals—is yet another factor that the DOJ, in its Merger Guidelines, has identified as making post-merger entry less likely.[34] However, the DOJ has chosen not to eliminate this entry barrier for the prospective IRU purchaser.

Another feature of these contracts is that customers that cannot meet their volume commitments must pay high ''termination'' penalties. While customers do not like these contracts, they have little choice but to sign them.[35] Because, as noted previously, for the densest metro areas the FCC no longer regulates the Bells' special access rates, the Bells have used this pricing flexibility to raise their ''month-to-month'' or non-OPP prices for special access. The resulting effect is that customers—almost all of whom are retail competitors with the Bells (Local Private Lines/special access circuits are critical inputs to all wireline and wireless telecommunications services)—cannot afford to pay higher prices when their competitors (including the Bell affiliates) are purchasing at a ''discount.'' The word ''discount'' is in quotations because the discounts are discounts off the month-to-month tariff price, so the Bell can still charge a monopoly profit maximizing price (through its OPP) by establishing a ''supra-monopoly'' price as the non-OPP alternative.

The most important thing to consider when trying to conceptualize how the optional pricing plans work, is that the incumbent—by exchanging ''discounts'' on products for which demand is inelastic (customers have no alternative) for commitments to not buy from competitors on products for which the customer could choose a competitor—gets to set the minimum scale of entry for his competitors. Thus the incumbent can pick demand over a large geographic region as the inelastic product (on which discounts are offered), or the incumbent could decide to ''discount'' lower capacity circuits (for which the incumbent's ''first mover'' status and scale/scope economies give it a tremendous advantage over new entrants) as the basis on which it will foreclose demand from rivals. Regardless, though, the end result is that the incumbent is able to raise the costs of its competitors by expanding the scale on which they would have to enter, or raising the size of the discount they would have to offer to make their customer indifferent between buying from the incumbent, and/or by limiting its competitors ability to expand quickly (by foreclosing demand).[36]

Given that courts, as well, have recognized the potential for anticompetitive foreclosure effects in these so-called ''bundled rebate'' or ''bundled discount'' plans, the DOJ needs to determine what percentage of the wholesale (carrier) and retail markets for special access are foreclosed by the contracts at issue. COMPTEL believes this number will be significant.[37] The D.C. Circuit has held that exclusionary conduct by a monopolist is more likely to be anticompetitive than ''ordinary'' exclusionary conduct achieved through non-monopoly means (i.e., agreements among competitors).[38] Moreover, the Third Circuit has held that contracts almost identical to the Bell OPP's, when used by a monopoly, were anticompetitive and exclusionary in violation of the antitrust laws.[39] The Supreme Court has held that a market share over 65% is sufficient to establish a prima facie case of monopoly power.[40] It is certainly the case that SBC and Verizon would be considered monopolies, pre-merger, in the special access market—regardless whether the market is defined as a building or metropolitan area.[41] Thus, an inquiry

[33] See, e.g., ''Quantity-Discount Contracts as a Barrier to Entry,'' T. Randolph Beard, PhD, George S. Ford, PhD, Lawrence J. Spiwak, Esq., Phoenix Center Policy Paper No. 20 (November 2004). Available at *http://www.phoenix-center.org/ppapers.html*

[34] ''Factors that reduce sales opportunities to entrants include * * * (b) the exclusion of an entrant from a portion of the market over the long term because of vertical integration or forward contracting by incumbents * * *.'' Merger Guidelines, Section 3.3.

[35] ''Discount pricing plans offered by ILECs further reduce the ability of CLECs to compete and result in higher prices. Even where a CLEC may offer a competing special access service (at a substantial discount to the ILEC offering), WilTel may not use that CLEC in many cases because it can incur a lower incremental expense by committing additional services to an existing ILEC plan even though the overall unit cost from the ILEC may be higher.'' Declaration of Mark Chaney in support of the Comments of WilTel at ¶ 6 filed with the Federal Communications Commission in In the Matter of Special Access Rates for Price Cap Local Exchange Carriers, WC Docket No. 05–25 on June 13, 2005.

[36] See, *e.g.*, Declaration of Michael D. Pelcovits on Behalf of WorldCom (as MCI was formerly known) at 7 filed with the Federal Communications Commission in *In the Matter of AT&T Petition for Rulemaking to Reform Regulation of Incumbent Local Exchange Carrier Rates for Interstate Special Access Services*, RM–10593. (''Less than fully exclusive contracts can similarly be exclusionary where they tie up sufficient volume to prevent smaller competitors from achieving minimum viable scale.'') Pelcovits also uses the following example to explain the pricing disadvantage at which competitors that cannot match the incumbent's scale or scope are placed: ''Suppose the monopoly (pre-entry) price is $1.00 and the customer buys 100 units. Further suppose that a competitor is capable of providing 25 units at a price of 99 cents, thereby threatening to undercut the monopolist. In response, the monopolist could offer the customer the choice of buying 75 units at $1.05 per unit, or buying all 100 units for 99 cents per unit. As a result, the customer now faces a price from the monopolist for the 25 ''in play'' units of $20.25, or 81 cents per unit. The competitor is unable to meet this price, and is excluded from the market.'' *Id.* at 7–8.

[37] SBC notes that the ''overwhelming majority'' of its special access circuits are sold under term and volume contracts. See n. 11, supra. Verizon has stated that 85% of its access sales were under some form of discount contract. Verizon Comments at 22 filed with the Federal Communications Commission in WC Docket No. 05–25 on June 13, 2005.

[38] *United States* v. *Microsoft Corp.*, 253 F.3d 34, 70 (D.C. Cir. 2001) (Microsoft's exclusionary contracts violated Section 2 (of the Sherman Act) ''even though the contracts foreclose less than the 40–50% share usually required in order to establish a § 1 violation.'')

[39] *LePage's Inc.* v. *3 M*, 324 F.3d 141 (3d Cir. 2003) (''The principal anticompetitive effect of bundled rebates as offered by [the defendant] is that when offered by a monopolist they may foreclose portions of the market to a potential competitor who does not manufacture an equally diverse group of products and who therefore cannot make a comparable offer'').

[40] *American Tobacco Co.* v. *United States*, 328 U.S. 781, 797 (1946).

[41] Only 3 years ago, AT&T—the best-situated special access customer (with the largest competitive local network in any Bell region)—was dependent on the incumbents for 93% of its DS1-level transport and 65% of its DS3-level access. See Reply Declaration of Janusz A. Ordover and Robert D. Willig on Behalf of AT&T Corp., In the Matter of AT&T Petition for Rulemaking to Reform Regulation of Incumbent Local Exchange Carrier

into what proportion of special access services are sold under the contracts described above should be sufficient to have enough information to determine that as long as the defendants are allowed to use these contracts, the DOJ's proffered remedy has no legitimate hope of restoring competition lost through the mergers.

B. The Proposed PAFJs Will Affirmatively Facilitate Collusion Between SBC and Verizon

However, there is one remaining aspect to the contracts discussed above that independently compels the DOJ to reject the PAFJs and require a more complete divestiture. The effect of the contracts, post-merger, will be to enhance the ability for the merged firms to engage in interdependent coordination. Post-merger each firm is the other's largest in-region competitor and largest out-of-region supplier. This new reality, in conjunction with the OPP contracts—which enforce input dependence on the dominant firm—leads naturally to increased coordination through the increased ability of each dominant firm to monitor each competitor for ''cheating'' and to thereby better facilitate coordination. The Competitive Impact Statements do not address, let alone explain, how coordinated effects will be prevented by the very limited relief proposed by the PAFJs. Effectively, four very large competitors, two of whom (AT&T and MCI) had every incentive to seek to grow share and pursue entry have been reduced to two historic monopolies whose incentives are much more to protect existing monopolies than they are to aggressively compete.

C. The Proposed Settlements Should Be Evaluated Together

There is no question that the acquisition of AT&T and MCI by SBC and Verizon, respectively, will substantially lessen competition in the provision and sale of ''Local Private Lines'' (also known as ''special access'') to the wholesale market, as well as voice and data services that rely on Local Private Lines, with the likely result that prices for the Lines and services using those Lines will increase ''to levels above that which would prevail absent the merger(s). Complaints ¶¶1, 25, 33. The Complaints conclude that, absent relief, competition will be diminished and prices will rise in both the wholesale and retail local private line markets. Complaints ¶25. Although the DOJ has asked the Court to review the proposed settlements together, it has ignored the important interrelationships between the mergers and the level of competition. The Tunney Act Reform, however, does not allow this same luxury. Rather, the DOJ is required to demonstrate than ''the impact of entry of such judgment upon *competition in the relevant market or markets* * * *[42]'' resolves the anticompetitive effects identified in the Complaints.

The DOJ, in its Merger Guidelines, notes that a significant potential anticompetitive effect of mergers occurs when the mergers increase the ability of the remaining firms in the market to coordinate in ways that harm consumers. The DOJ notes that ''[c]ertain market conditions that are conducive to reaching terms of coordination also may be conducive to detecting or punishing deviations from those terms.'' Merger Guidelines, Section 2.1.

COMPTEL submits that these conditions are fully satisfied in the case of the present mergers and the PAFJs do not remedy these conditions because they do not restore the competitive condition to pre-merger levels. The complaints recognize that AT&T and MCI are each among the largest competitors to both SBC and Verizon. Complaints at ¶ 8. The inescapable conclusion from this fact is that post-merger, both SBCA and Verizon will be the largest competitor to the other. Significantly, however, each pre-merger carrier (i.e., AT&T and MCI) has explained to the FCC that it is bound by volume discount contracts to SBC and Verizon that effectively require that each purchase most of its special access services from its rival (SBC and Verizon) or be harmed by the loss of discounts based on regionwide commitments.[43]

What is even more important going forward is that the contracts do not just act to discourage the new ''out-of-region'' competitors from using other competitive carriers, but the contracts act as a disincentive for the post-merger out-of-region competitors to use their own networks. Thus, the contracts serve to cement the two post-merger firms' interdependence, and provide a ready-made excuse as to why they cannot/will not compete aggressively on price in either wholesale input markets or in retail business or wireless markets. Moreover, these commitment contracts for wholesale inputs constitute a perfect mechanism to detect and punish cheating in the retail market, as any significant increase in inputs purchased can indicate that the competitor is experiencing an increase in retrial demand as the result of a decline in retail price.

Alternatively, the post-merger dominant firms have no less of an information advantage in wholesale markets. Because the post-merger AT&T and Verizon have such a significant portion of wholesale demand under such contracts, they are also in a position to notice decreases in demand from other wholesale customers at old-AT&T or old-MCI ''on-net'' locations. Reduced purchases by other wholesale market customers could easily and efficiently alert the post-merger incumbent to wholesale market cheating.

Once the dominant firm has detected wholesale or retail market cheating, it can then perfectly signal, through either price responses by its own CLEC in the other Bell's region, or through output restrictions—quality disruptions from its ILEC to the ''maverick'' CLEC. Finally, these contracts ensure that the post-merger firms have a government-sanctioned defense to collusion.

Unlike the pre-merger AT&T and MCI, these post-merger companies will never complain about the unreasonable restrictions these contracts place on their ability to use competitive facilities—they perfectly know this is the intended effect of the contracts. Moreover, they also know that if they just stay ''captive''—as is reasonable—then they can take any increase in private line rates as a signal/excuse to raise retail rates. Since they can expect the same consideration where they are the input monopolist and dominant retail firm, they have an incentive to provide the same consideration as an out-of-region competitor. This is a significant risk of harm to the public interest, because most telecommunications services that the post-merger firms will sell in each other's ILEC regions (local, long distance, voice, data, and wireless) rely in large part on ''Local Private Line'' service as a critical input.

Finally, although it is pretty clear how the existing contracts enhance both firms' incentives and ability to coordinate post-merger, what may not be so clear is how the feckless remedy structure further enhances the ability of the post-merger firms to limit competition. The ''divestiture assets'' are most likely to be interesting/valuable to a firm that already has a significant network in the divestiture market. As the DOJ explains,

Rates for Interstate Special Access Services, FCC RM–10593, at ¶ 30.

[42] 15 U.S.C. 16(e)(1)(B) (emphasis added).

[43] See, generally, AT&T and MCI filings in FCC RM–10593 and WC Docket No. 05–25. Attachments 4 and 5 are representative of the pre-merger firms' concern over their dependence on SBC and Verizon special access—a dependence that was only magnified by the bundled rebate contracts.

''[p]urchasers that are already offering similar services in or near the metropolitan area are more likely to be viable competitors than other potential purchasers.'' Competitive Impact Statement at p. 6 of 12. Moreover, the government strongly prefers a single purchaser. Id. Finally, the terms of the ''assets'' themselves are fairly unique—10 yr leases for non-revenue-producing excess capacity; the ''purchaser'' would still have to undertake significant investment to use the assets by obtaining building access, laying additional inside wire/conduit, then ''lighting'' the fiber, and even after all that, the government is not requiring the defendants to let customers in the affected buildings out of their contracts so a purchaser could start earning revenue immediately. Thus, because the ''assets'' are structured to be attractive to a purchaser who has a greater ability to ''warehouse'' capacity then a ''typical'' competitor,[44] it seems likely that AT&T and Verizon will be the natural higher bidders for the excess capacity in each other's territory.

The further expansion of AT&T and Verizon's out-of-region presence in the other's in-region territory through the addition of excess capacity only increases the means for non-detectable signaling and closer coordination. For example, instead of cutting prices in Verizon's incumbent territory to signal disapproval of Verizon's pricing in AT&T's incumbent region, AT&T can just take steps that make it look like it is preparing to activate the excess capacity in the discreet out-of-region buildings. In fact, the parties may find it useful to signal entirely through discreet bids at the locations where DOJ seems to expect price discrimination.

[44] ''Because a single such connection may cost hundreds of thousands of dollars to build and light, CLECs will typically only build in to a particular building after they have secured a customer contract of sufficient size and length to justify the anticipated construction costs for that building.'' Competitive Impact Statement p. 5 of 12.

Conclusion

COMPTEL has demonstrated that the PAFJs do not even begin to remedy, and may even exacerbate, the public interest harms caused by the elimination of the two largest competitive carriers by the two largest incumbent monopolies. Accordingly, the Court will be required to reject the PAFJs, because they cannot satisfy the Tunney Act unless modified to: (1) Include all of the acquired competitors' in-region assets as a whole business—with customers, employees, and assets; and (2) eliminate both post-merger firms' ability to offer ''bundled rebate'' style pricing to any customer, including their own long-distance and wire less affiliates.

Respectfully submitted,

Jonathan D. Lee, Mary C. Albert.
COMPTEL, 1900 M Street, NW., Suite 800, Washington, DC 20036–3508, (202) 296–6650.

BILLING CODE 4410–11–M

Appendix A

MVP & MIBS — Anti-Competitive Issues

- Using these tariffs is not optional for AT&T in the future
- If AT&T does not use MVP, unit costs will go up in the near term - dramatically
- If there were alternatives…
- No customer would accept the anti-competitive terms of MVP or MIBS

MVP & MIBS — Anti-Competitive Issues

- At that time the initial MVP tariffs, commitments based upon percent of previous spend were less of a concern – forecasts projected continued rapid growth in all service categories.
- Things have changed, and more change is possible through competition and new technology.

  Business Climate
  - "Irrational Exuberance" to Optimization and Constrained Demand
  - Infinite Growth to Stranded Plant, Over-Capacity

  Supplier Alternatives
  - Metro Facility CAPS to Cable, Wireless and Powerline
  - Geographically Limited Footprint to Ubiquitous Technology

  Technologies and Services
  - TDM / Private Line / POTS to ATM / Packet / VOIP
  - Bulk Capacity to Bandwidth On Demand
  - Best in Class to Best Effort

  Customer Expectations
  - Generic Reliability to Application-Specific Service Quality
  - Stability to Flexibility
- ILEC special service optional payment plans (like MIBS) cannot be allowed to require customers to "lock-in" current purchase levels.
  - Plan requirements must not "look back".
  - Plans must look forward.

DS1 Unit Problem

- SBC DS1 market share is in excess of 90%
- DS1 competition is limited - it is the last mile product
- Even where competitive carriers do operate, SBC DS1 unit cost are about 40% higher than competitors
- Given this market share and pricing , SBC will not voluntary reduce rates
- SBC may reduce prices to competitive levels if:
  - FCC action – re-regulation
  - Ensuring UNE DS1's are permitted as an economical replacement
  - Use of competitive and technological alternatives is possible
    - IP
    - Wireless
    - Packet
    - Broadband

MVP & MIBS

- What Should a Competitive Plan Include?
  - Commitment Choice
  - Unit Costs that Reflect a Forward-Looking Competitive Market
  - Optimized Network Configuration
  - Next Generation Technology Savings Passed on to Customer

MVP Tariff — Volume Independent Discounts

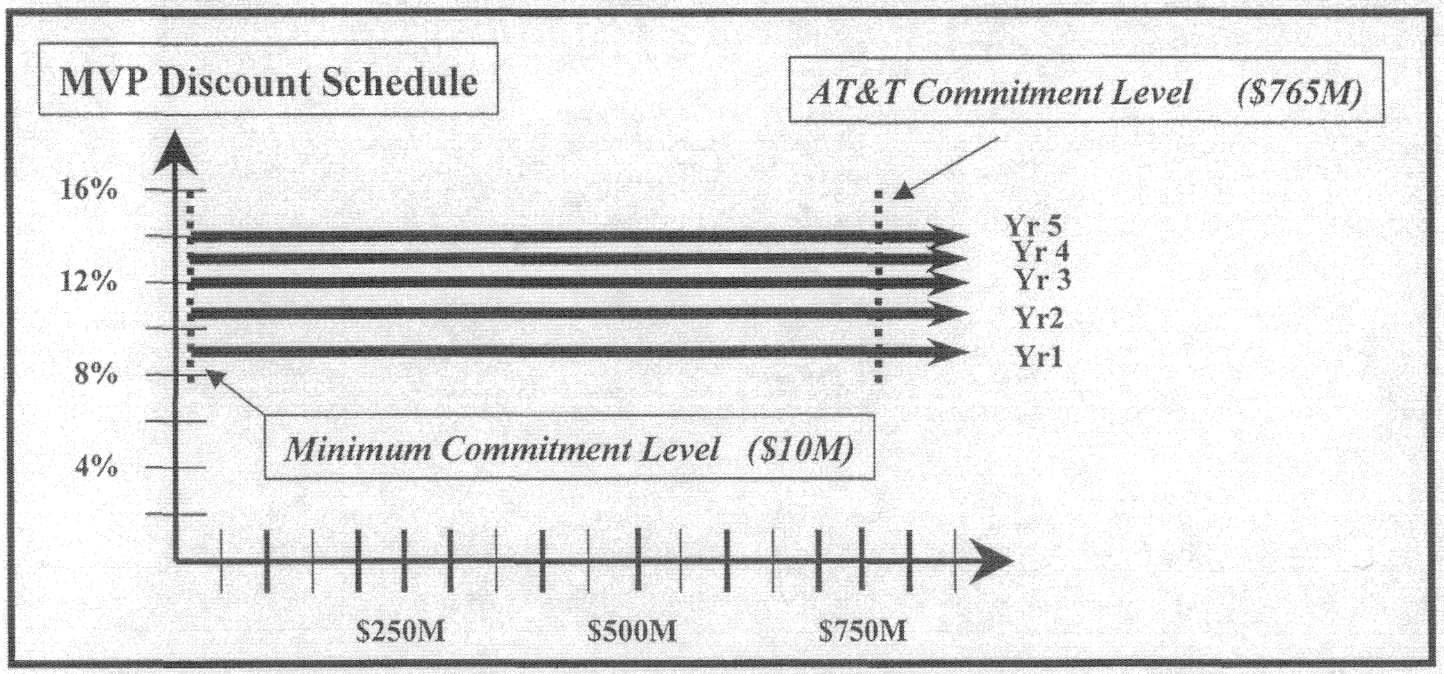

- Current MVP tariff provides discounts for annual commitment levels as low as $10M.
- Commitment levels are established at 100% of the total expense at the beginning of the five year plan.
- Discounts increase from 9% in the first year to 14% in the fourth and fifth years.
- Discounts are independent of the committed expense volume.
  - Discounts afforded under this plan remain the same for large and small purchasers.
- AT&T's commitment level of $765M is over 75 times greater than the minimum.

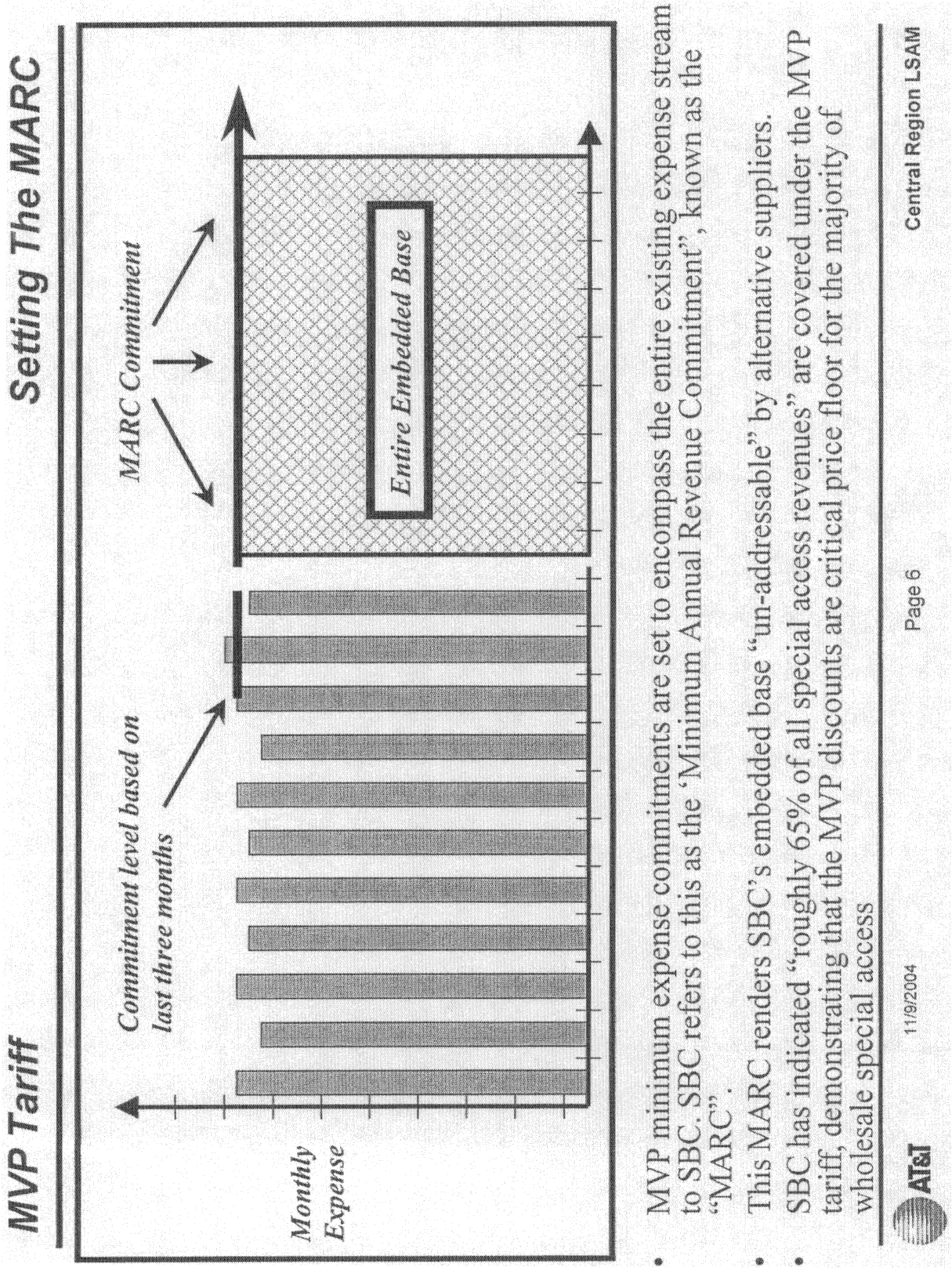
MVP Tariff
Setting The MARC
Monthly Expense
Commitment level based on last three months
MARC Commitment
Entire Embedded Base
• MVP minimum expense commitments are set to encompass the entire existing expense stream to SBC. SBC refers to this as the 'Minimum Annual Revenue Commitment", known as the "MARC".
• This MARC renders SBC's embedded base "un-addressable" by alternative suppliers.
• SBC has indicated "roughly 65% of all special access revenues" are covered under the MVP tariff, demonstrating that the MVP discounts are critical price floor for the majority of wholesale special access
AT&T
11/9/2004
Page 6
Central Region LSAM

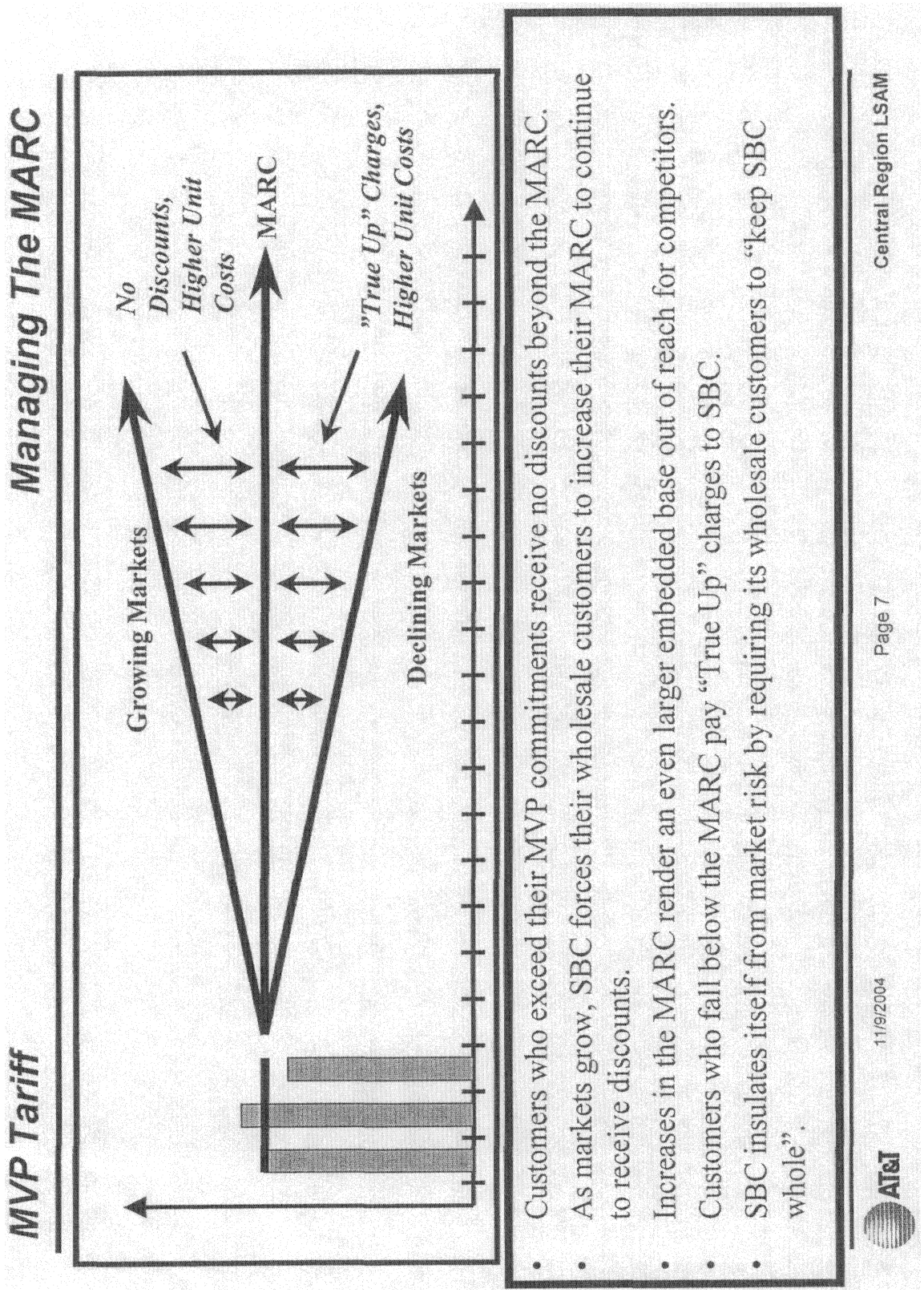
MVP Tariff
Managing The MARC
Growing Markets
No Discounts, Higher Unit Costs
MARC
"True Up" Charges, Higher Unit Costs
Declining Markets
• Customers who exceed their MVP commitments receive no discounts beyond the MARC.
• As markets grow, SBC forces their wholesale customers to increase their MARC to continue to receive discounts.
• Increases in the MARC render an even larger embedded base out of reach for competitors.
• Customers who fall below the MARC pay "True Up" charges to SBC.
• SBC insulates itself from market risk by requiring its wholesale customers to "keep SBC whole".
AT&T
11/9/2004
Page 7
Central Region LSAM

MVP Tariff

Anti-Competitive Issues

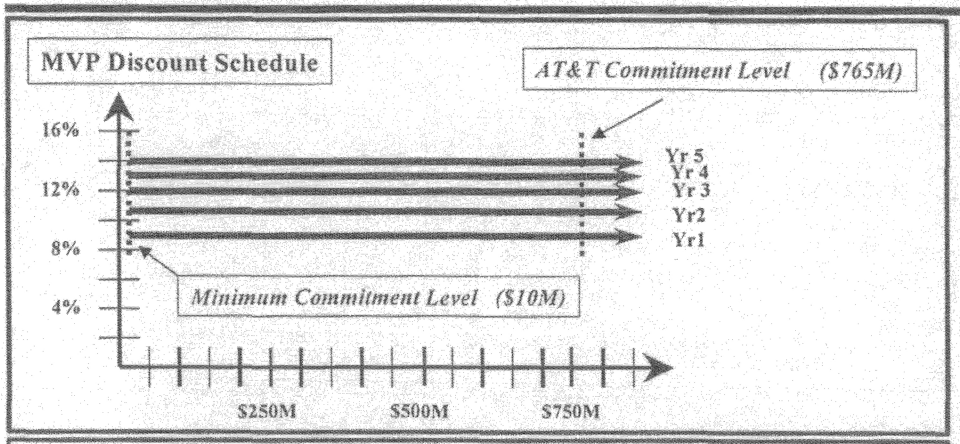

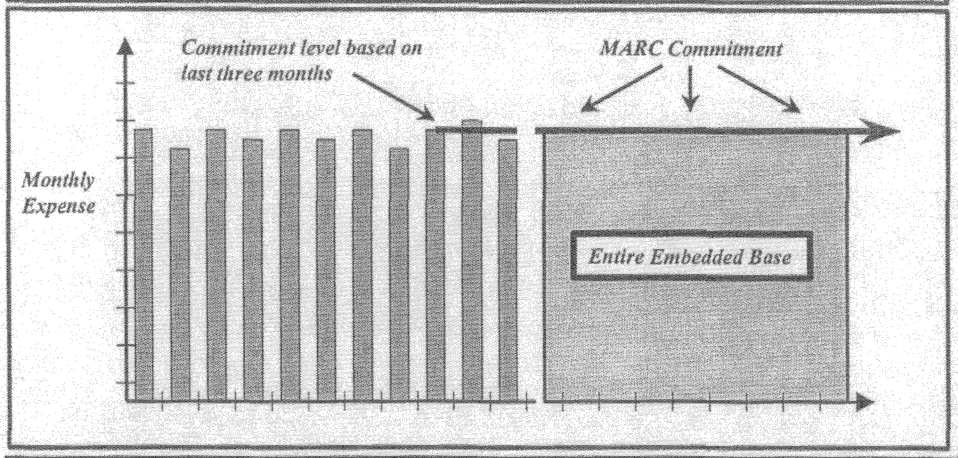

- Although SBC positions the MVP as a "volume" discount program, discounts are independent of expense "volume" once $10M is achieved and depend solely on commitment of 100% of existing business.
- SBC's OPP contracts already provide a term commitment – the vast majority of AT&T's circuits are already covered by 5 year OPP commitments.
- SBC's MVP tariff freezes access competitors out of the current embedded base of customers, limiting their addressable market to new growth only.

The prospects for increased "true up" expenses places competing access suppliers at a competitive disadvantage once an MVP is in place, despite competitors' significantly lower unit costs for actual services.

MVP Anti-Competitive Issues

- Tariff requires 100% Commitment of current spend throughout life of Contract and beyond, no matter how large or small the commitment
  - Commitment can Increase but Cannot Decrease
  - Because no discount for excess spend, Customer must continually refresh commitment or effectively receive a lower discount
  - At end of commitment, Customer must continue at current level to retain 14% discount attained in Year 5 or forfeit discounts for 6 months and then start at 9% on new base
- Shortfall Penalties
  - Pay dollar for dollar on expenses below the Commitment
- Must Maintain an Access Service Ratio of 95%
  - Cannot Purchase More than 5% of Dedicated Access through UNE

MVP Tariff — Recasting the MARC

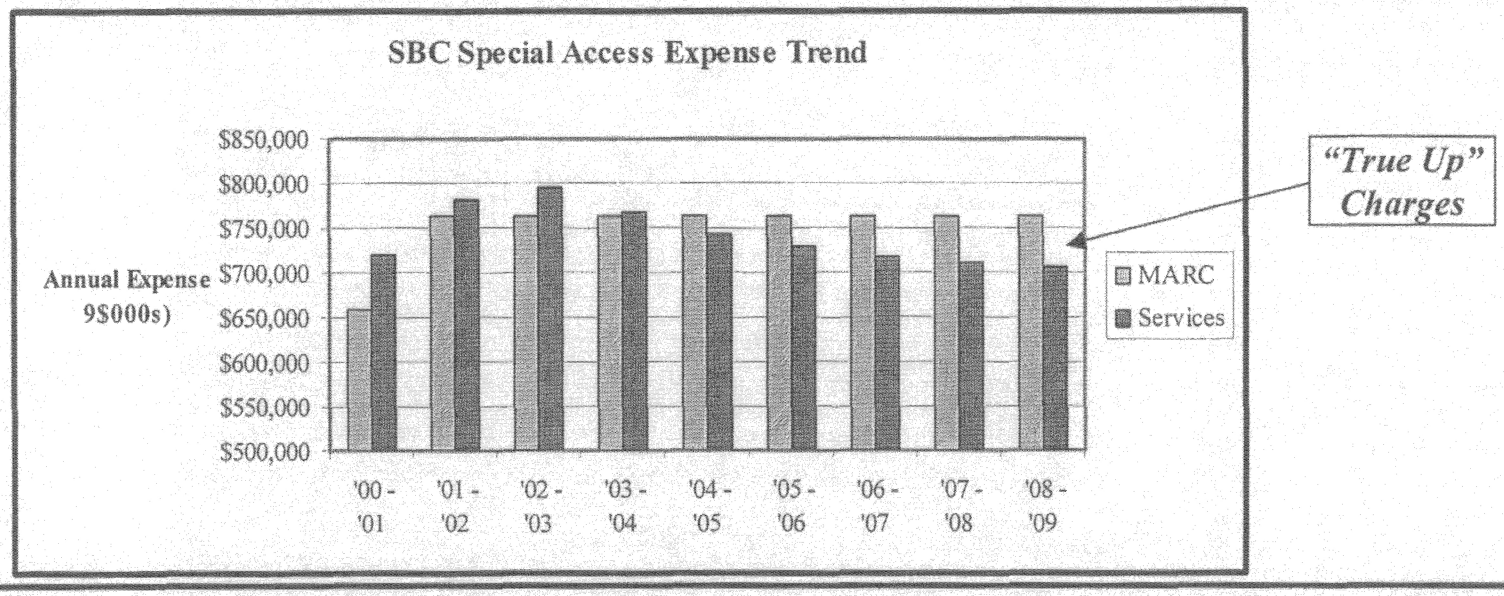

AT&T negotiated an increase in the MARC commitment on September 2001, to reflect the still burgeoning market conditions prior to the collapse of the telecom market.

At that time, commitments based upon percent of current spend were less of a concern – forecasts projected continued rapid growth in all service categories.

Things have changed, and more change through competition and new technology is possible --- IF

Future plans (like MIBS) cannot be allowed to lock in these levels. Plan requirements must not "look back". Plans must look forward.

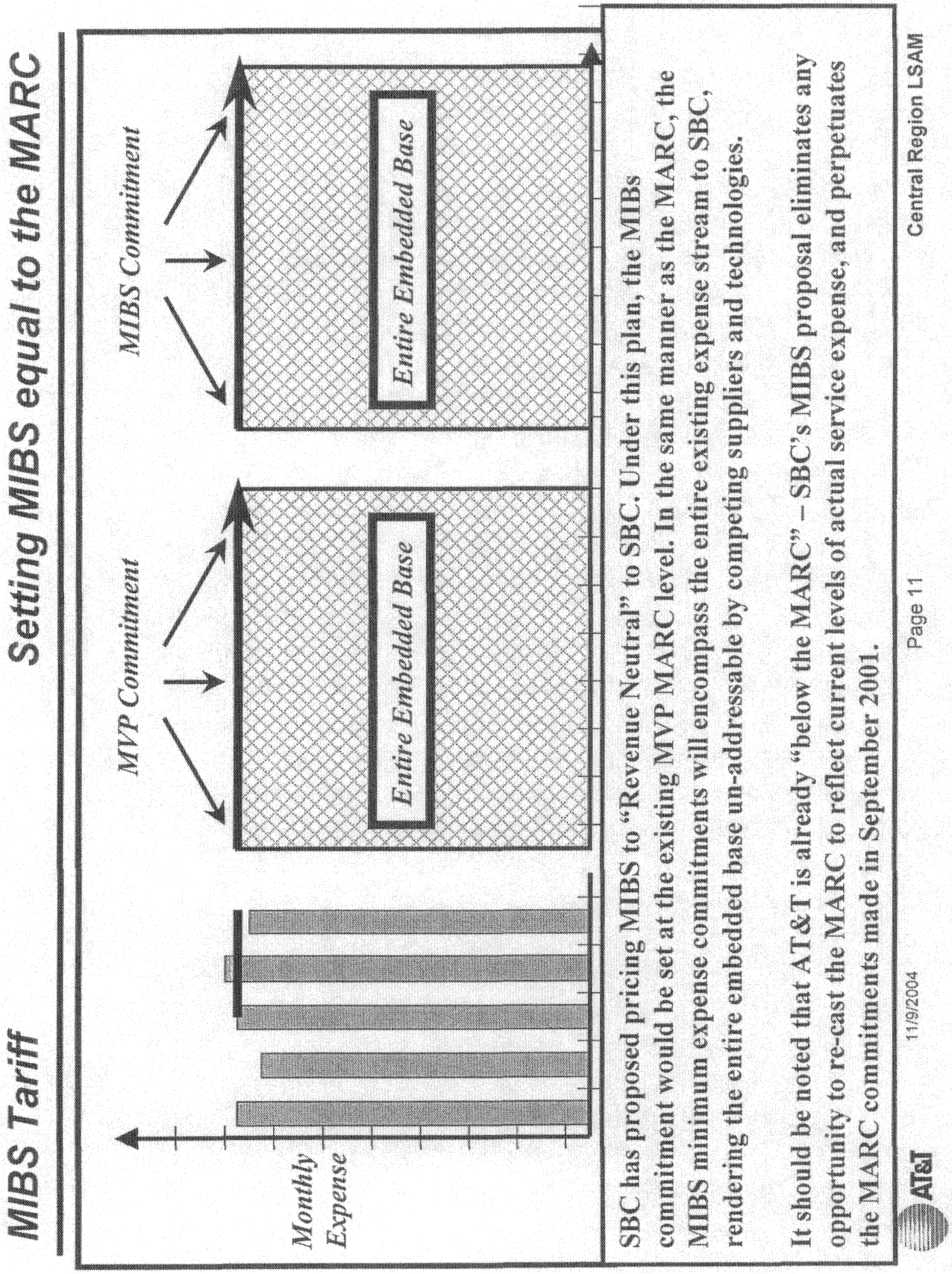
MIBS Tariff
Setting MIBS equal to the MARC
MVP Commitment
MIBS Commitment
Entire Embedded Base
Entire Embedded Base
Monthly Expense
SBC has proposed pricing MIBS to "Revenue Neutral" to SBC. Under this plan, the MIBs commitment would be set at the existing MVP MARC level. In the same manner as the MARC, the MIBS minimum expense commitments will encompass the entire existing expense stream to SBC, rendering the entire embedded base un-addressable by competing suppliers and technologies.
It should be noted that AT&T is already "below the MARC" – SBC's MIBS proposal eliminates any opportunity to re-cast the MARC to reflect current levels of actual service expense, and perpetuates the MARC commitments made in September 2001.
AT&T
11/9/2004
Page 11
Central Region LSAM

MIBS Project — Current Rate Structure

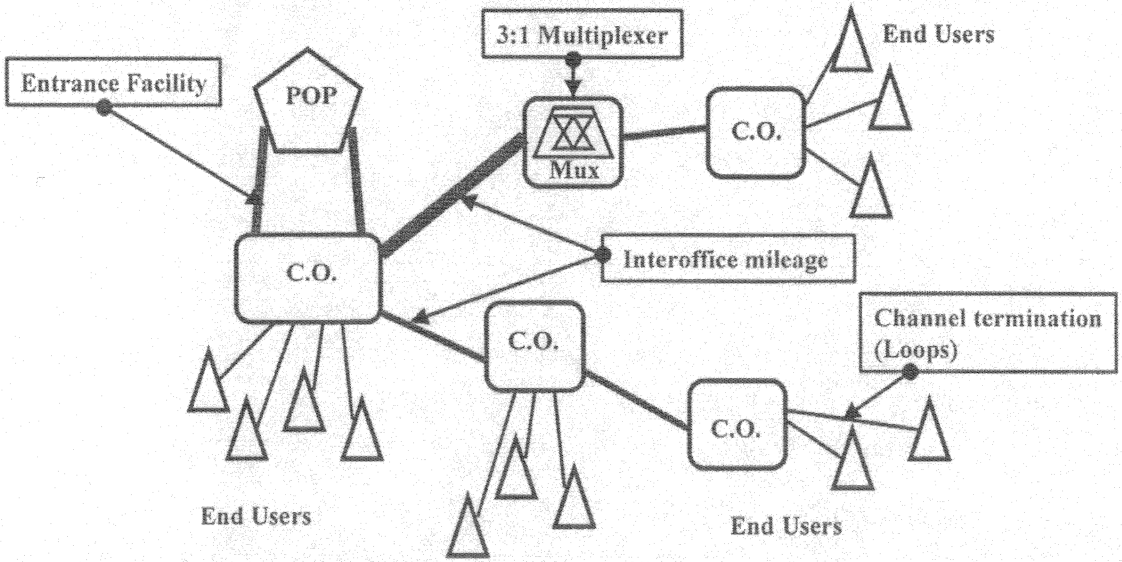

AT&T's network expense can be significantly reduced by increasing utilization from current levels.

MIBS envisioned a "virtual" optimization benefit to AT&T by significantly discounting network components rolled into the "MNI" rate element

Significant improvements in AT&T's network utilization are stymied by expense commitment levels in place under the current MVP tariff.

SBC's decision to set MIBS pricing at levels equal to AT&T's current expense perpetuates SBC's relative unit cost disadvantage. Incremental unit cost improvements from "buying more MIBS" is insufficient to close a deepening unit cost gap

Under MIBS, AT&T has no meaningful opportunity to improve the utilization of the network elements it has paid for. SBC can, however, utilize any available capacity on under-utilized facilities to support other customers or their own retail products.

MIBS Anti-Competitive Issues

- Customers Cannot Chose Commitment Levels
  - Requires Customer Commitments on Expense Levels Generated 3 Years Ago
  - SBC is Forcing a Higher Commitment than the Current Run Rate
  - Immediate Shortfall – only way to counteract is to move volumes from CLEC/CAP's and AT&T Network to SBC's Network
- Commitment Cannot Decrease
  - Adding Customers to AT&T's Base Automatically Increases the Bandwidth and Revenue Commitment Levels to SBC, thus Forcing a Higher Expense Commitment than the Current Run Rate
  - Adding Bandwidth increases the Bandwidth Minimum Revenue Commitment Level
  - Core Capacity can only go up
  - Commitment Increases are Non-Discretionary
  - MIBS Pricing is set to be "Revenue Neutral" to SBC.

MIBS Anti-Competitive Issues

- Commitment periods are unrealistically long in time of rapid technology change and dramatic changes in end-user application requirements
  - Five or Seven Year Commitment Requirement
- Commitment Decrease Requires Market Exit and Subsequent Termination Penalties
- Because MIBS is Managed at the LATA Level, it Prohibits the use of Competitive Suppliers
  - MIBS Requires Commitments in all SBC LATA's where Customer has Presence
  - All eligible services in all LATA's must be purchased under MIBS
  - Cannot Purchase from Alternative Suppliers, even if Price Advantage
  - Lock-in Unit Cost that is 66% Higher than CLEC/CAP's
- MIBS is a Revenue Plan – it does not recognize Volume, Circuits, or Bandwidth
  - As Such, Network Efficiency by Replacing Legacy Services with Next Generation Services, which has a lower Unit Cost and Reduces Billing, does not Convey back to the Customer

MVP & MIBS — Anti-Competitive Issues

If there were alternatives…

- No customer would accept the anti-competitive terms of MVP or MIBS
- **Things have changed, and more change is possible through competition and new technology.**
- **Future plans (like MIBS) cannot be allowed to lock in these levels.**
  - **Plan requirements must not "look back".**
  - **Plans must look forward.**

BILLING CODE 4410–11–C

Appendix B—Statement of Joseph Farrell

April 25, 2005.

1. I am Professor of Economics and Chair of the Competition Policy Center at the University of California, Berkeley, where I am also Affiliate Professor of Business. In 1996–1997 I served as Chief Economist at the FCC. In 2000–2001 I served as Deputy Assistant Attorney General and chief economist at the US Department of Justice Antitrust Division. I am Fellow of the Econometric Society and former President of the Industrial Organization Society. From 2001 to 2004 I served on the Computer Science and Telecommunications Board of the National Academics of Science. My curriculum vitae is attached as Appendix 1.

2. I have been asked by counsel for Global Crossing to comment on likely competitive effects on special access of the proposed merger between SBC and AT&T. Neither time nor data availability permits a full analysis, but in this declaration I identify some concerns that, in my view, the Commission and its staff should fully investigate. In particular I offer a preliminary economic analysis of region-wide merger effects in the presence of percentage-of-requirements contracts such as I understand SBC uses in special access.

3. Of most direct concern is the elimination of the horizontal competition between SBC and AT&T where both offer facilities-based special access to a building or other appropriately granular geographic market that is not so served by several other carriers.[1] While the granular geographic market definition is the most obvious, it must be supplemented (not replaced) by a region-wide market definition and analysis capable of assessing the competitive effects of such a loss of competition in the presence of a loyalty or volume pricing program such as I understand that SBC offers, linking competition in different granular markets. In addition, vertical concerns arise, especially given the Commission's pending special access rulemaking. All of these concerns demand much more scrutiny in the light of adequate data, which the Commission is well positioned to demand and analyze, and important parts of which SBC and AT&T are likely to be uniquely positioned to provide. The Commission's rulemaking does not substitute for competitive analysis of the proposed merger.

Special Access Market

4. Firms such as Global Crossing build facilities over which they offer business customers a range of telecommunications and data services. In general however they do not build facilities all the way to customers' premises. Rather, they procure last-mile connections, known as special access, from ILECs such as SBC and in some cases from competitive access providers (CAPs), including AT&T.

5. In its region, SBC can offer special access to essentially all major business premises. No CAP can offer access to a large percentage of such premises. However, I understand that AT&T offers special access connections to substantially more buildings than can any other CAP.[2]

6. I further understand that, whatever may be the case in consumer markets, intermodal (wireless or cable) alternatives are not generally regarded as viable alternatives to special access by Global Crossing and similarly situated firms, nor by their customers.

7. Unbundled network elements do not generally offer a viable, independently priced, alternative way for Global Crossing or its customers to acquire the last-mile connection, because of the FCC's decision not to require unbundling of network elements unless used primarily for local competition.[3]

8. I also understand that the Commission has treated special access as a market in itself.[4]

9. These considerations suggest that special access is a relevant antitrust product market. More subtle issues arise in geographic market definitions, as I discuss next.

Geographic Market Definition

Granular Analysis

10. From the point of view of final demand-side substitution, the natural and correct market definition is likely to be extremely localized. A business located in a certain building and wishing to procure telecommunications services is unlikely to substitute special access to a different building in response to a small but significant and nontransitory increase in the price of special access services to its building. For a business with established premises, such substitution would involve costly relocation. Perhaps some businesses seeking new premises might seek out buildings to which special access is more competitively supplied, but it is unlikely that this effect would be strong enough to change the presumption that the correct geographic market based on demand-side substitution would be highly localized, as is the case with many telecommunications markets. For the same reason, the direct customers of special access (such as Global Crossing) do not find special access to different geographical points to be worthwhile substitutes, as they are trying to serve particular customers in particular locations.

11. It is legitimate and often helpful to aggregate such highly granular markets when they face the same competitive conditions. But of course that condition can be affected by the pattern and structure of competitor's pricing and other competitive behavior.

12. One natural form of competitive behavior would be for SBC and any CAPs who can provide special access to a particular building to compete, perhaps by bidding, on terms specific to that building.

13. With that form of competition, the geographic market definition based on demand substitution by end users would be the correct framework in which to analyze the effects of a merger such as this one between SBC and a leading CAP.

---

[1] In their public interest statement, SBC and AT&T suggest that the markets where both offer special access are served by multiple others, but the specific facts they cite concern geographic areas far broader than buildings. A full inquiry into appropriate granularity is evidently needed.

[2] I also understand that AT&T is a major reseller of SBC special access. While the role of resellers in competition is not straightforward, it certainly need not be null, especially when incumbents offer volume discounts, and the Commission should investigate the extent to which resellers collectively, and AT&T in particular, may constrain SBC's effective pricing in ways that promote competition and consumer welfare.

[3] Unbundled Access to Network Elements: Review of the Section 251 Unbundling Obligations of Incumbent Local Exchange Carriers, WC Docket 04–313, CC Docket 01–338, 2005 FCC LEXIS 912 at 64 (March 14, 2005).

[4] See Special Access Rates for Price Cap Local Exchange Carriers: AT&T Corp. Petition for Rulemaking to Reform Regulation of Incumbent Local Exchange Carrier Rates for Interstate Special Access Services, 20 FCC RCD 1994 (2005); Performance Measurements and Standards for Interstate Special Access Services; Petition of U S West, Inc. For a Declaratory Ruling Preempting State Commission Proceedings to Regulate U S West's Provision of Federally Tariffed Interstate Services; Petition of Association for Local Telecommunications Services for Declaratory Ruling; Implementation of the Non-Accounting Safeguards of Sections 271 and 272 of the Communications Act of 1934, as amended; 2000 Biennial Regulatory Review—Telecommunications Service Quality Reporting Requirements; AT&T Corp. Petition to Establish Performance Standards, Reporting Requirements, and Self-Executing Remedies Need to Ensure Compliance by ILECs with Their Statutory Obligations Regarding Special Access Services, 16 FCC Rcd 20896 (2001); Local Exchange Carriers' Rates, Terms and Conditions for Expanded Interconnection Through Physical Collocation for Special Access and Switched Transport, 12 FCC Rcd 18730 (1997).

14. In that framework, one would identify geographic markets (buildings, for instance) in which SBC does not compete with AT&T, markets in which SBC faces competition only from AT&T, and markets in which SBC faces competition from AT&T and from one, two or more other CAPs. The analysis of competitive effects would then proceed separately for each of these classes of highly granular market.

Regional Analysis

15. I understand that, today, SBC's pricing does not fully respond to such granular competitive conditions, building by building, and that SBC is content to price well above CAPs where it does face CAP competition and offers substantial discounts in return for region-wide commitments to give SBC not simply a large amount of business but a large share of the carrier's business. Thus Global Crossing reports that:

> ''Typically, SBC will structure volume commitments in terms of a percentage of the special access customer's embedded base of circuits, or its current annual spend. Special access customers must commit to spend at least 90% of their current spend in the following year or maintain 90% of its embedded circuit base with SBC in order to be eligible for volume discounts,'' [5]

and that, as a result, ''SBCV chooses not to meet its competitors' rates.'' [6]

16. Such a pricing practice links special access pricing in different buildings, and—while it persists—argues for a region-wide market definition because (as I explain below) it can make region-wide concentration a more important determinant of competitive behavior and overall pricing than concentration and entry possibilities specific to a building or route.

17. This does not mean that customers can substitute across routes, nor that only carriers who offer special access region-wide (which indeed would mean only SBC) are ''in the market.'' Rather, a region-wide geographic market definition is likely to be a sensible way of summarizing the competitive impact of CAP presence at multiple locations, as I describe in a simple formal model in the technical appendix below. In that model I show how the price paid by special access customers on SBC monopoly routes (denoted p in the model) depends on the percentage of routes that are SBC monopolies. The aggregate share of CAPs, or more precisely the share of routes served by CAPs in aggregate (denote θ in the model), turns out in that model to be a constraint on SBC's (discounted, i.e., effective) pricing p even on monopoly routes, if SBC pursues a pricing strategy of the kind described. It is in this sense that a region-wide geographic market definition is appropriate.

18. I do not suggest that my simplified, incomplete formal model is the final or only answer. Rather, it illustrates that when a dominant firm's pricing policies link competition across routes, a simple route-level competitive analysis, which inevitably misses such links, can readily yield wrong predictions for pricing, while a region-wide competitive analysis can help by incorporating analysis of such links.

Using Both Approaches

19. The analysis above indicates that, to capture both the effects of limited potential for end-user substitution across addresses, and also the effects of pricing practices that link (perhaps quite widely separated) buildings, intelligent geographic market definition in this transaction involves using at least two definitions: one highly granular (perhaps as granular as individual office buildings), the other corresponding to the geographic scope of SBC's pricing practices, i.e., region-wide.[7]

20. These are not alternative means of analysis. As always, definitions should not pre-empt analysis; but an analysis that uses geographic market definition must consider both of these definitions or risk overlooking important effects.

21. Because it is at least plausible (see below) that SBC's reported pricing practices are exclusionary, it presumably is comparably plausible that the Commission's separate inquiry into the special access market will constrain SBC's ability to sustain those practices. If so, then the granular, perhaps even building-by-building geographic market definition would become relatively more appropriate. On the other hand if SBC's pricing practices survive (whether or not because they are benign), the region-wide geographic market definition remains the natural way to capture potentially important competitive effects. Thus a choice of one of these geographic market definitions would pre-judge the Commission's treatment of SBC's pricing policies. (As I discuss below, none of this is to suggest that the pendency of the Commission's special access rule-making is a reason not to consider the effect of this proposed merger on the special access market.) In this sense as well as the more substantive sense above, the two geographic market definitions must both be pursued at this stage, and are not alternatives in the sense that the Commission can simply choose one.

22. SBC's pricing policies might also change as a result of changes in competitive conditions over time, or even as a result of a change in thinking by SBC's management. Thus, while it would certainly be wrong to analyze the merger only on a granular basis, as if SBC's actual current policies were off the radar screen, it would also be wrong to analyze the merger only on a region-wide basis, or as if those policies were certain to be permanent.

Competitive Effects of SBC–AT&T Merger in Special Access

Analysis With Granular Markets

23. For many office buildings in-region, SBC is at present the only provider of special access. The merger would nevertheless have a competitive effect in those granular markets if the merger eliminates an important potential of entry by AT&T; that is, if AT&T is an especially likely entrant. AT&T is a large customer of special access and supplier of enterprise network services, and one likely mechanism through which entry into special access (that is, the construction of special access facilities) could occur is via the customer's enterprise network services provider deciding to build its own facilites to bypass SBC's special access charges. It therefore is credible a priori that AT&T would be an especially likely entrant into granular special access markets that are currently monopolies. Such a view would be reinforced if (a) the majority of non-ILEC coinstruction of special access facilites is by an enterprise network services provider to its customer's premises, and (b) AT&T has a persistently high share of the enterprise network services market. Both of these conditions are consistent with my general understanding of the market, but the data required to examine them in detail is not publicly available; I urge the Commission and its staff to obtain this data and perform this analysis.

24. For a substantial number of other buildings, I understand, AT&T and SBC are the only two alternative providers of special access. For businesses in such a building, or for the telecommunications carriers (such as Global Crossing) who compete to serve them using special access, this is a merger from duopoly to

[5] In the matter of SBC Communications Inc. and AT&T Corp. Applications for Transfer of Control: Comments of Global Crossing, at 14 (April 25, 2005).

[6] Id. at 17.

[7] I understand that this may correspond to RBOC ''footprints'' such as Ameritech's not (yet) reflecting mergers into the current SBC.

monopoly, which should surely raise a very strong concern at the Commission.

25. As usual, such concerns could be assuaged to some degree if entry were likely to be timely and sufficient to deter or repair any competitive problems. Given the large sunk costs involved, that it is unlikely to be the case, but Commission analysis of previous entry decisions by AT&T as well as by others could confirm this.

26. There may be other buildings where SBC and AT&T both offer special access, and one other CAP (such as MCI) does so;[8] as to such buildings, this is a ''three-to-two'' merger, which should also raise significant concerns.[9]

27. If the granular market accurately describes competition, then it should be possible for the Commission to quantify the likely effects of such changes. In particular, it would be possible (with suitable data from the parties) to study average special access prices with and without route-level competition.

28. However, such a study will underestimate competitive effects—perhaps drastically so—if SBC pursues a geographically averaged pricing policy supported by discount plans that link competitive conditions across different routes. In the extreme, if SBC prices uniformly without regard to route-level competitive conditions, but its overall price level is sustained above the competitive level by its localized monopoly power in some routes, then such a cross-section study would miss the effect. Rather, in that case, one must analyze competitive conditions across as well as within granular markets to understand these effects and correctly predict the competitive consequences of a merger, as I discuss next.

Analysis With Region-Wide Market

29. Presumably SBC implements its discount plan in the expectation that it will affect customers' behavior. The effect is that a customer will (sometimes) pass up lower CAP prices in a particular building in order to meet its SBC volume commitment. That behavior, or the pricing plan that induces it, links competitive conditions across the separate buildings or other highly granular (what would otherwise be) geographic markets. Customer behavior then cannot be properly understood, nor competitive conditions examined, on a purely granular basis.

30. In the technical appendix, I offer a simple preliminary model to help understand the role of CAP competition in constraining prices when the dominant ubiquitous firm, SBC, offers volume discounts large enough to be tempting, based on share commitments big enough to be constraining.

31. The model assumes that SBC's discounted price is constrained by special access customers' ''break-out'' option of instead buying from CAPs wherever they offer a better price, and paying SBC's undiscounted price where there are no CAPs (or where SBC offers a better price on a granular basis, although the model predicts, consistent with what I understand is the evidence, that this is not the pattern).

32. That break-out alternative is more appealing the higher is the gap between the percentage of buildings where there are CAPs and the percentage of business that a customer can give to CAPs without losing its SBC volume discount. As a result, the loss of a special access competitor through merger makes the break-out alternative less appealing (given SBC's volume threshold for discounts) and thus allows SBC to raise its discounted price without losing business.

33. In the model, one can (recognizing that it is very preliminary) calculate the likely competitive effect of the loss of CAP such as AT&T. In the model, that effect is proportional to the change in the fraction of buildings that are served by one or more CAPs. That is, it is proportional to the fraction ($\Delta\theta$ in the model) of buildings served, pre-merger, by SBC and AT&T alone.

34. In this model, if one can assume that SBC's volume commitment requirement and its undiscounted price do not change with the merger, the overall average price effect from the merger is equal to that fraction $\Delta\theta$, times the difference between SBC's undiscounted price and the CAP price. This appears to be about as strong as, or arguably stronger than, the average competitive effect of the merger-to-monopoly aspects of the merger would be in the granular mode of competition.

35. Because the model predicts that a pricing policy like that attributed to SBC can create very strong competition among CAPs even at different locations, it may make entry incentives very weak even where SBC is charging prices well above cost. If so, entry would be unlikely to repair or deter anticompetitive effects in a timely fashion. Again, this is not an analysis ready for prime time: Instead, it illustrates why further analysis is needed.

36. Because the model is preliminary and incomplete, and the necessary data is not publicly available, I view it as illustrating an at least initially plausible region-wide mechanism through which the loss of a special access competitor causes a ''unilateral effect'' price increase by the dominant firm, given pricing policies broadly akin to SBC's. This buttresses the argument that the Commission should carefully consider region-wide geographic markets as well as granular markets.

Special Access Competition, Special Access Regulation, and Leverage

37. Whatever its legal status, any suggestion that the Commission should ignore competitive concerns in special access because it has a pending rulemaking on the topic makes no sense from a general policy or economic viewpoint. If the merger harms special access competition, no decision likely to be contemplated by the Commission in the rulemaking proceeding can restore such competition.

38. To be sure, the Commission might find some policies to implement. But most policies would be available with or without the competition lost by merger, so their availability does not change that fact that losing competition is harmful.

39. Furthermore, if the rulemaking proceeding might (or might be thought apt to) involve price regulation of special access, that will create (or strengthen) incentives for leverage that the merger would simultaneously facilitate; such regulation could even be prompted by the loss of special access competition due to the merger.[10]

40. With greater horizontal market power in special access, and with a much stronger position in enterprise network services following its acquisition of AT&T, SBC will in any event have increased incentives to raise special access prices to downstream enterprise network service providers (or generally special access customers) such as Global Crossing.

41. The effect of such a price increase, holding fixed the retail price charged by SBC's downstream affiliate, would be in part be to shift business from independent downstream providers to SBC's downstream affiliate; this is more likely to happen, and the alternative outcome of the customers dropping out of the market is less likely to happen, if SBC's downstream affiliate is larger and more attractive to customers, as will be

[8] There may well be other buildings where MCI provides the only competition to the ILEC, which will be important in analyzing a merger involving MCI.

[9] By stopping here, I do not mean to suggest that four-to-three mergers are unproblematic, but the basic point should be clear by now.

[10] I am not suggesting (see my article cited below) that regulation of a bottleneck is the only condition that leads to incentives for leverage into an unregulated, competitive or potentially competitive complement. Rather, it is one well-established condition that predictably does so.

the case post-merger. Thus this component of the incentive will grow stronger with the merger.

42. Another part of the effect will be simply to raise market prices downstream; this is likely to be the primary effect if (as I understand) customers face significant portability or switching costs. This gives SBC more profits, the larger the market share of its downstream affiliate. Again, this indicates that the incentive for price increases to independent downstream firms will grow with the proposed merger. This incentive must be set against the potential elimination of double marginalization internally.

43. There may also be an incentive for non-price discrimination, especially if SBC fears that its special access pricing may be regulated, since that will create an incentive for regulatory bypass by taking rents at the enterprise network service level rather than at the special access level.[11]

44. Increased incentives for leverage, in turn, will lead either to harm to competition in downstream markets such as enterprise network services, or to vertical regulation to try to stop such leverage, or quite possibly to both.

45. Opinions can differ on the right degree of vertical restraint to impose on dominant firms with incentives for leverage, and I am not expressing a position here on whether special access prices should be regulated or whether vertical regulation such as non-discrimination should be imposed.

46. For the reasons above, I conclude that (a) the proposed merger involves a loss of direct horizontal facilities-based competition in special access; (b) the geographic market definition and the competitive analysis involve consideration of SBC's pricing policies for special access, and this could well lead to a region-wide (or similar) geographic market definition being more informative than one based narrowly on consumer substitution; (c) there may well also be vertical issues, especially if the state of competition in special access is problematic; and (d) the Commission should vigorously investigate these concerns, including demanding the data with which to investigate them, and a general regulatory proceeding on special access cannot replace the investigation of merger-specific competitive effects.

Technical Appendix: Pricing with Share-Contingent Discounts

Consider the following market structure. A dominant firm, S, offers service at all locations. It sets a price p* and a discounted price p that it gives to each customer who buys at least a fraction $1-\varepsilon$ of its volume from it.[12]

$$(1-\varepsilon)p = [0.9]\left[(1-\varepsilon)p + \varepsilon\, p_c\right];\ \text{this yields}\ \varepsilon = \left[1+9^{p_c}/p\right]^{-1}.\ \text{If}\ p_c \approx \frac{1}{2}p\ \text{then}\ \varepsilon \approx 0.15$$

Rivals (CAPs) collectively offer service at a fraction $\theta<1$ of all locations. They set a price ρ_c; I discuss the determination of ρ_c below, but for simplicity I assume that it is the same for all CAPs.

Each customer needs to buy service at a number of locations, and I assume that service is available from CAPs (collectively) at a fraction θ of these locations. I assume that the dominant firm's volume condition for the discount, that the customer buy at least a fraction $1-\varepsilon$ of its volume from S, is binding, which means (assuming $\rho_c<\rho$) that $\varepsilon<\theta$.

Thus the customer has two buying strategies. First, it could buy from CAPs wherever they offer service, but must then pay S the undiscounted price ρ^* in the fraction $1-\theta$ of case where there is no CAP. This ''break-out'' strategy leads to an average price paid of:

$$\theta\rho_c+(1-\theta)\rho^*.$$

Alternatively, the customer can ''manage to the discount'' and limit its procurement from CAPs to a fraction $\varepsilon<\theta$ of locations, so that it pays the discounted price ρ in the remaining cases. This leads to an average price paid of:

$$\varepsilon\rho_c+(1-\varepsilon)\rho.$$

In reality, different customers may make different choices, but for a simple model, consider limit pricing by S so that all customers choose the latter option. (There would be no point in the discount program if all customers chose the former option.) At least given θ and p*, S presumably wants to maximize p, subject to keeping customers on the discount program, which implies:

$$p = \frac{(1-\theta)p^* + (\theta-\varepsilon)p_c}{1-\varepsilon}$$

Note that since the customer is offered CAP service at θ locations but will not buy it at more than ε of them, CAPs at different locations actually compete with one another. This is a possible reason why, I understand, a single CAP offering special access to a building otherwise served only by SBC will price well below SBC, not just below as would presumably be the case (adjusting for quality) without the volume pricing.

From the formula for p one can derive the effects on the average price paid if a merger removes a CAP and θ thus falls, assuming that p* and ε remain unchanged:[13]

$$\Delta p = -(1-\varepsilon)^{-1}(p^* - p_c)\Delta\theta$$

Perhaps more usefully, we can plug the formula for p into the expression $\varepsilon p_c + (1-\varepsilon)\,p$ for the average price $\bar{p}$ actually paid, yielding $\bar{p} = (1-\theta)\,p^* + \theta\, p_c$. This is the same average price as would be paid if (a) there were no linkages among locations; (b) S priced at p* at its monopoly locations; and (c) customers paid p_c at locations with CAPs. We then have $\Delta\bar{p} = (p^* - p_c)\,[-\Delta\theta]$.

If (in the world with discount pricing) S expects that many customers will not break out and pay p*, but will instead manage to the discount and limit their purchases from CAPs so as to avoid p* and pay p instead, then p* plays the role of a penalty inducement to manage to the discount scheme as well as a market price for break-out customers in monopoly buildings. Thus it appears that S has an incentive to set p* above the monopoly level p^m, roughly in proportion to the fraction of customers who manage to the discount rather than break out. On the other hand, p_c reflects artificial inter-location competition as described above, as well as any intra-location competition from the presence

[11] For a recent discussion of a range of leverage incentives, and the link with regulation of a bottleneck, see Joseph Farrell and Philip Weiser, ''Modularity, Vertical Integration, and Open Access Policies: Towards a Convergence of Antitrust and Regulation in the Internet Age,'' Harvard Journal of Law and Technology 17:1 (Fall 2003), 85–135.

[12] As noted above, Global Crossing reports that SBC's volume commitment plans specify 90% of previous-year in-region special access spend. In order to meet such a commitment, assuming for simplicity that there is no growth, the customer would have to serve no more than a fraction ε of customers via CAPs. where ε is such that (see equation above).

[13] One of the ways in which this model is preliminary and incomplete is that it does not model SBC's choice of those variables.

of multiple CAPs at a building, so p_c will be decreasing in $(\theta - \varepsilon)/\theta$.

The net effect of the discount pricing program on the average price paid is thus not obvious from this preliminary analysis, but to the extent that $p^* > p^m$ and/or that p_c is below the average oligopoly price that would emerge under granular competition, the program apparently exacerbates the average competitive effect of a loss in θ, i.e. the average competitive effect of a merger.

The model also seems to suggest that such a program may be exclusionary, in the sense of making entry even by an equally efficient CAP unprofitable even though the incumbent S prices well above cost. The gross return to entry is p_c times the probability that a CAP will make a sale. In the simple model, that probability is $\varepsilon/\theta < 1$. That is, despite pricing well below the incumbent S, a CAP will sometimes (perhaps often) lose business to S. Although this is not a deep or complete analysis, I believe it is enough to establish that the possible anticompetitive effect of such a pricing plan is a question well worth investigating, and that competitive analysis of the proposed merger should not assume with certainty that these pricing practices will survive the Commission's policy response to such an investigation.

Appendix C—Agreement

Whereas, Quest Communications International, Inc., a Delaware corporation (''Qwest''), and Allegiance Telecom, Inc., a Delaware corporation (''Allegiance''), have entered into an Asset Purchase Agreement dated as of December 18, 2003 pursuant to which Qwest agreed to purchase substantially all of the property, assets, licenses, and rights that Allegiance uses to provide telecommunications services to business customers,

Whereas, Qwest intends to bide for the assets of Allegiance at the bankruptcy auction scheduled to be held on February 12 and 13, 2004, in the U.S. Bankruptcy Court for the Southern District of New York,

Whereas, the United States Department of Justice (''Department'') has opened a preliminary inquiry into Qwest's proposed acquisition of Allegiance to investigate whether Qwest's acquisition of Allegiance's assets used to serve telecommunications customers in five Metropolitan Statistical Areas—Denver, Colorado; Minneapolis, Minnesota; Portland, Oregon; Phoenix, Arizona; and Seattle, Washington—located largely or wholly within Qwest's local exchange service franchise areas (''In-Region Assets'') may tend substantially to lessen competition in any relevant market,

Whereas, the Department has identified no competitive concerns with Qwest's proposed acquisition of Allegiance in Metropolitan Statistical Areas located outside of Qwest's local exchange service franchise areas,

Whereas, Allegiance is in bankruptcy and a prolonged delay in resolving its status could be detrimental to Allegiance's customers, employees, and business, as well as to competition in the telecommunications business,

Whereas, Qwest and Allegiance desire that the closing of a potential transaction between Qwest and Allegiance not be unnecessarily delayed beyond April 8, 2004,

Whereas, Qwest and Allegiance desire to reach an agreement with the Department prior to the bankruptcy auction regarding the Department's antitrust investigation and the disposition of the In-Region Assets should the Department conclude that Qwest's acquisition of the In-Region may tend substantially to lessen competition, and

Whereas, the Department believes that the undertakings of Qwest and Allegiance under the proposed Final Judgment would be sufficient to remedy any potential anticompetitive consequence of Qwest's acquisition of Allegiance,

Now, therefore, Qwest, Allegiance, and the Department agree that the following provisions shall apply if the U.S. Bankruptcy Court for the Southern District of New York, pursuant to 11 U.S.C. 363, approves an agreement by which Qwest acquires all, or substantially all, of the assets of Allegiance (''the Transaction''):

1. Qwest and Allegiance will not close the Transaction prior to April 8, 2004.

2. If at any time after April 1, 2004, the Department concludes that Qwest's acquisition of the In-Region Assets from Allegiance may tend substantially to lessen competition in any relevant market, and the Assistant Attorney General has authorized the filing of a complaint in federal district court alleging the same, Qwest and Allegiance agree not to contest that determination or any other allegations contained in the Department's complaint, provided that Qwest and Allegiance shall have been afforded a reasonable opportunity to meet with and be heard by the Deputy Assistant Attorney General or Assistant Attorney General within the Department responsible for this matter prior to such determination being made.

3. In the event that the Department determines that Qwest's acquisition of the in-region assets from Allegiance may tend substantially to lessen competition in any relevant market, Qwest and Allegiance hereby consent and agree, pursuant to the terms of the Stipulation attached hereto as Exhibit 1, to the entry of a Final Judgment, in the form attached hereto as Exhibit 2.

4. The Department will conduct its investigation of Qwest's proposed acquisition of Allegiance via Civil Investigative Demands (''CIDs'') rather than Second Requests and will not oppose the closing of the Transaction on April 8, 2004, or any time thereafter.

5. Qwest and Allegiance will fully comply with CIDs for documents and interrogatories issued by the Department, will produce the requested information on a rolling basis, and will use their best efforts to complete production by March 5, 2004. Qwest and Allegiance will produce any individual issued a CID for oral testimony, and will use their best efforts to make any such individual available within 10 days after issuance of the CID.

6. The Department will use its best efforts to complete its investigation by the later of (a) April 8, 2004, or (b) 30 days after Qwest and Allegiance have both fully complied with CIDs for documents and interrogatories issued by the Department, but in the event that the Department has neither closed its investigation nor filed a complaint as of the date the Transaction is consummated, Qwest and Allegiance will abide by the Hold Separate provisions contained in Paragraphs V.A–V.L. of the Stipulation, attached hereto as Exhibit 1, until such time as the Department notifies Qwest and Allegiance that it has decided not to challenge the proposed Transaction.

7. Until the Department competes its investigation, Qwest and Allegiance shall not, without the Department's consent, sell, lease, assign, transfer, or otherwise dispose of any of the Divestiture Assets, as defined in Paragraph II.D of the Proposed Final Judgment attached hereto as Exhibit 2, except as in the ordinary course of business.

William Kokasky,
Wilmer, Culter & Pickering, Attorney for Qwest

Marimichael O. Skubel,
Kirkland & Ellis LLP, Attorney for Allegiance.

Lawrence M. Frankel,
Attorney, Telecommunications & Media Section, Antitrust Division, United States Department of Justice.

United States District Court, District of Columbia

United States of America, Plaintiff, v. Qwest Communications International Inc. and Allegiance Telecom, Inc. Defendants.

Civil Action No.
Filed:

Hold Separate Stipulation and Order

It is hereby stipulated and agreed by and between the undersigned parties, subject to approval and entry by the Court, that:

I. Definitions

As used in this Hold Separate Stipulation and Order:

A. ''Acquirer'' or ''Acquirers'' means the entity or entities to whom defendants divest the Divestiture Assets.

B. ''Qwest'' means defendant Qwest Communications International Inc., a Delaware corporation with its headquarters in Denver, Colorado, its successors and assigns, and its subsidiaries, divisions, groups, affiliates, partnerships and joint ventures, and their directors, officers, managers, agents and employees.

C. ''Allegiance'' means defendant Allegiance Telecom, Inc., a Delaware corporation with its headquarters in Dallas, Texas, its successors and assigns, and its subsidiaries, divisions, groups, affiliates, partnerships and joint ventures, and their directors, officers, managers, agents, and employees.

D. ''Divestiture Assets'' means all assets, tangible and intangible, acquired by Qwest from Allegiance pursuant to 11 U.S.C. 363, that are used by Allegiance to provide telecommunications services in the In-Region MSAs, except for Excluded Assets. The term ''Divestiture Assets'' shall be construed broadly to accomplish the complete divestiture of assets to ensure that the divested assets are sufficient to operate a viable ongoing telecommunications business and includes, but is not limited to:

(1) All switches, routers, transport, and associated collocation facilities located in the In-Region MSAs, and interconnection agreements used in connection with the provision of telecommunications services (telecommunications herein includes transmission using the IP protocol) to customers in the In-Region MSAs, and all interests, contracts and other associated rights in those facilities, that were acquired by Qwest from Allegiance pursuant to 11 U.S.C. 363;

(2) All contracts with customers to provide telecommunications services to locations within the In-Region MSAs, business and customer records and information, customer lists, credit records, deposits, accounts, and historic and current business plans associated with the provision of telecommunications services to customer locations in the In-Region MSAs or with marketing to potential customers in the In-Region MSAs;

(3) All types of real property and personal property, equipment, inventory, office furniture, fixed assets and furnishings, supplies and materials located in the In-Region MSAs;

(4) All licenses, permits and authorizations issued by the Federal Communications Commission or any other federal, state or local regulatory body used in the provision of telecommunications services in the In-Region MSAs;

(5) All intellectual property rights that are used to provide telecommunications services in the In-Region MSAs. Intellectual property rights comprise all patents, licenses, sublicenses, trade secrets, know-how, computer software and related documentation, drawing, blueprints, design, technical and quality manuals, and other technical information defendants supply to their own employees, customers, suppliers, agents or licensees, or other intellectual property, including all intellectual property rights under third party licenses. Intellectual property rights will be provided to the extent they are capable of being transferred to a purchaser either in their entirety, or through a license or sub-license;

(6) All leases, contracts, agreements, and commitments with third parties used primarily in connection with the provision of telecommunications services in the In-Region MSAs; and

(7) All transport facilities physically located in whole or in part within In-Region MSAs including all interests, contracts, and associated rights acquired by Qwest from Allegiance pursuant to 11 U.S.C. 363.

E. ''Excluded Assets'' means: (a) all Excluded Customer Contracts; (b) all transport facilities between MSAs outside of the In-Region MSAs; and (c) all Shared Systems.

F. ''Excluded Customer Contract'' means any single contract with a customer (a) that covers telecommunication services provided to locations within, as well as outside, the In-Region MSAs, (b) for which the majority of the services are provided outside the In-Region MSAs (with ''majority'' measured by an objective measure approved by the United States in its sole discretion), and (c) for which it would be impossible or impractical for Qwest and the Acquirer(s) to divide the revenues and responsibilities under the contract. The term also includes any business and customer records and information, customer lists, credit records, accounts, and historic and current business plans associated exclusively with provision of service via such contracts.

G. ''In-Region MSAs'' means the following Metropolitan Statistical Areas (MSAs): Denver, Colorado; Minneapolis, Minnesota; Phoenix, Arizona; Portland, Oregon; and Seattle, Washington.

H. ''Shared Systems'' means all operating and related systems acquired by Qwest from Allegiance pursuant to 11 U.S.C. 363 that (a) are predominantly used in connection with the provision of telecommunications services to customers in markets outside of the In-Region MSAs, including, but not limited to, order entry, provisioning, billing, network monitoring, and other systems, and (b) are not capable of being divided between the divested and retained businesses.

II. Objectives

The Final Judgment filed in this case is meant to ensure defendants' prompt divestiture of the Divestiture Assets for the purpose of remedying the effects that the United States alleges would otherwise result from Qwest's acquisition of the Divestiture Assets. This Hold Separate Stipulation and Order ensures, prior to such divestitures, that the Divestiture Assets remain economically viable and ongoing business concerns that will remain independent and uninfluenced by Qwest, and that competition is maintained during the pendency of the ordered divestitures.

III. Jurisdiction and Venue

The Court has jurisdiction over the subject matter of this action and over each of the parties hereto, and venue of this action is proper in the United States District Court for the District of Columbia.

IV. Compliance With and Entry of Final Judgment

A. The parties stipulate that a Final Judgment in the form attached hereto as Exhibit A may be filed with and entered by the Court, upon the motion of any party or upon the Court's own motion, at any time after compliance with the requirements of the Antitrust Procedures and Penalties Act (15 U.S.C. 16), and without further notice to any party or other proceedings, provided that the United States has not withdrawn its consent, which it may do at any time before the entry of the proposed Final Judgment by serving

notice thereof on defendants and by filing that notice with the Court.

B. Defendants shall abide by and comply with the provisions of the proposed Final Judgment, pending the Judgment's entry by the Court, or until expiration of time for all appeals of any Court ruling declining entry of the proposed Final Judgment, and shall, from the date of the filing of this Stipulation with the Court, comply with all the terms and provisions of the proposed Final Judgment as though the same were in full force and effect as an order of the Court.

C. Defendants shall not consummate the transaction sought to be enjoined by the Complaint herein before the Court has signed this Hold Separate Stipulation and Order.

D. This Stipulation shall apply with equal force and effect to any amended proposed Final Judgment agreed upon in writing by the parties and submitted to the Court.

E. In the event (1) the United States has withdrawn its consent, as provided in Section IV(A) above, or (2) the proposed Final Judgment is not entered pursuant to this Stipulation, the time has expired for all appeals of any Court ruling declining entry of the proposed Final Judgment, and the Court has not otherwise ordered continued compliance with the terms and provisions of the proposed Final Judgment, then the parties are released from all further obligations under this Stipulation, and the making of this Stipulation shall be without prejudice to any party in this or any other proceeding.

F. Defendants represent that the divestitures ordered in the proposed Final Judgment can and will be made, and that defendants will later raise no claim of mistake, hardship or difficulty of compliance as grounds for asking the Court to modify any of the provisions contained therein.

V. Hold Separate Provisions

Until the divestitures required by the Final Judgment have been accomplished:

A. Defendants shall preserve, maintain, and continue to operate the Divestiture Assets as independent, ongoing, economically viable competitive businesses, with management, sales and operations of such assets held entirely separate, distinct and apart from those of Qwest's other operations. Qwest shall not coordinate its marketing or terms of sale of any products or services with those sold under any of the Divestiture Assets. Within ten (10) days after the entry of the Hold Separate Stipulation and Order, defendants will inform the United States of the steps defendants have taken to comply with this Hold Separate Stipulation and Order.

B. Qwest shall take all steps necessary to ensure that (1) the Divestiture Assets will be maintained and operated as independent, ongoing economically viable and active competitors in the telecommunications business; (2) management of the Divestiture Assets will not be influenced by Qwest (except to the extent necessary to carry out Qwests's obligations under this Order or as required by applicable law); and (3) the books, records, competitively sensitive sales, marketing and pricing information, and decision-making concerning production, distribution or sales of products or services by or under any of the Divestiture Assets will be kept separate and apart from Qwest's other operations.

C. Defendants shall use all reasonable efforts to maintain and increase the sales and revenues of the services produced or sold by the Divestiture Assets, and shall maintain at current or previously approved levels for 2005, whichever are higher, all promotional, advertising sales, technical assistance, marketing and merchandising support for Divestiture Assets.

D. Qwest shall provide sufficient working capital and lines and sources of credit to continue to maintain the Divestiture Assets as economically viable and competitive, ongoing businesses, consistent with the requirements of Sections V(A) and (B).

E. Defendants shall take all steps necessary to ensure that the Divestiture Assets are fully maintained in operable condition at no less than its current capacity and sales, and shall maintain and adhere to normal repair and maintenance schedule for the Divestiture Assets.

F. Defendants shall not, except as part of a divestiture approved by the United States in accordance with the terms of the proposal Final Judgment, remove, sell, lease, assign, transfer, pledge or otherwise dispose of any of the Divestiture Assets.

G. Defendants shall maintain, in accordance with sound accounting principles, separate accurate and complete financial ledgers, books and records that records that report on a periodic basis, such as the last business day of every month, consistent with past practices, the assets liabilities, expenses, revenues and income of the Divestiture Assets.

H. Defendants shall take no action that would jeopardize, delay, or impede the sale of the Divestiture Assets.

I. Defendants' employees with primary responsibility for the operation of the Divestiture Assets shall not be transferred or reassigned to other areas within the company except for transfer bids initiated by employees pursuant to defendants' regular, established job posting policy. Defendants shall provide the United States with ten (10) calendar days notice of such transfer.

J. Defendants shall appoint a person or persons to oversee the Divestiture Assets, subject to the approval of the United States, and who will be responsible for defendants' compliance with this section. This person shall have complete managerial responsibility for the Divestiture Assets, subject to the provisions of this Final Judgment. In the event such person is unable to perform his duties, defendant shall appoint, subject to the approval of the United States, a replacement within ten (10) working days. Should defendant fail to appoint a replacement acceptable to the United States within this time period, the United States shall appoint a replacement.

K. Unless informed otherwise by the person with managerial responsibility for the Divestiture Assets, Qwest shall provide the Divestiture Assets at no costs with the following: (a) Any services provided via Shared Systems, and (b) transport over interexchange facilities acquired by Qwest from Allegiance pursuant to 11 U.S.C. 363 that are not included in the Divestiture Assets.

L. Defendants shall take no action that would interfere with the ability of any trustee appointed pursuant to the Final Judgment to complete the divestiture pursuant to the Final Judgment to an Acquirer or Acquirers acceptable to the United States.

M. This Hold Separate Stipulation and Order shall remain in effect until consummation of the divestiture required by the proposed Final Judgment or until further order of the Court.

Dated:

Respectfully submitted,
For Plaintiff
United States of America

Lawrence M. Frankel,
D.C. Bar No. 441532, U.S. Department of Justice, Antitrust Division, 1401 H Street NW., Suite 8000, Washington, DC 20530, (202) 514–4298.

For Defendant
Qwest Communications International Inc.

William Kolasky,
D.C. Bar No. 217539, Wilmer Cutler & Pickering, 2445 M Street, NW., Washington, DC 20037, (202) 663–6357.

For Defendant
Allegiance Telecom, Inc.

Marimichael O. Skubel,
D.C. Bar No. 294934, Kirkland & Ellis LLP, 655 Fifteenth Street NW,, Washington, DC 20005, (202) 879–5034.

Order.

It is so ordered by the Court, this ____ day of _____.

United States District Judge.

United States District Court District of Columbia

United States of America, Plaintiff, v. Qwest Communications International Inc., and Allegiance Telecom, Inc., Defendants.

Civil Action No.
Filed: [Date Filed]

Final Judgment

Whereas, plaintiff, United States of America, filed its Complaint on April, 2004,

Whereas, plaintiff and defendants, Qwest Communications International Inc. (''Qwest'') and Allegiance Telecom, Inc. (''Allegiance''), by their respective attorneys, have consented to the entry of this Final Judgment without trial or adjudication of any issue of fact or law, and without this Final Judgment constituting any evidence against or admission by any party regarding any issue of fact or law;

Whereas, defendants agree to be bound by the provisions of this Final Judgment pending its approval by the Court;

Whereas, the essence of this Final Judgment is the prompt and certain divestiture of certain rights or assets by the defendants to assure that competition is not substantially lessened;

Whereas, plaintiff requires defendants to make certain divestitures for the purpose of remedying the loss of competition alleged in the Complaint; and

Whereas, defendants have represented to the United States that the divestitures required below can and will be made and that defendants will later raise no claim of hardship or difficulty as grounds for asking the Court to modify and of the divestiture provisions contained below;

Now therefore,. before any testimony is taken, without trial or adjudication of any issue of fact or law, and upon consent of the parties, it is *Ordered, Adjudged and Decreed:*

I. Jurisdiction

This Court has jurisdiction over the subject matter of and each of the parties to this action. The Complaint states a claim upon which relief may be granted against defendants under Section 7 of the Clayton Act, as amended (15 U.S.C. 18).

II. Definitions

As used in this Final Judgment:

A. ''Acquirer'' or ''Acquirers'' means the entity or entities to whom defendants divest the Divestiture Assets.

B. ''Qwest'' means defendant Qwest Communications International Inc., a Delaware corporation with its headquarters in Denver, Colorado, its successors and assigns, and its subsidiaries, divisions, groups, affiliates, partnerships, and joint ventures, and their director, officer, manages, agents, and employees.

C. ''Allegiance'' means defendant Allegiance Telecom, Inc., a Delaware corporation with its headquarters in Dallas, Texas, it successors and assigns, and its subsidiaries, divisions, groups, affiliates, partnerships and joint ventures, and their directors, officers, managers, agents, and employees.

D. ''Divestiture Assets'' means all assets, tangible and intangible, acquired by Qwest from Allegiance pursuant to 11 U.S.C. 363, that are used by Allegiance to provide telecommunications services in the In-Region MSAs, except for Excluded Assets. The term ''Divestiture Assets'' shall be construed broadly to accomplish the complete divestiture of assets to ensure that the divested assets are sufficient to operate a viable ongoing telecommunications business and includes, but is not limited to:

(1) All switches, routers, transport, and associated collocation facilities located in the In-Region MSAs, and interconnection agreements used in connection with the provision of telecommunications services (telecommunications herein includes transmission using the IP protocol) to customers in the In-Region MSAs, and all interests, contracts and other associated rights in those facilities, that were acquired by Qwest from Allegiance pursuant to 11 U.S.C. 363;

(2) All contracts with customers to provide telecommunications services to locations within the In-Region MSAs, business and customer records and information, customer lists, credit records, deposits, accounts, and historic and current business plans associated with the provision of telecommunications services to customer locations in the In-Region MSAs or with marketing to potential customers in the In-Region MSAs;

(3) All types of real property and personal property, equipment, inventory, office furniture, fixed assets and furnishings, supplies and materials located in the In-Region MSAs;

(4) All licenses, permits and authorizations issued by the Federal Communications Commission or any other federal, state or local regulatory body used in the provision of telecommunications services in the In-Region MSAs;

(5) All intellectual property rights that are used to provide telecommunications services in the In-Region MSAs. Intellectual property rights comprise all patents, licenses, sublicenses, trade secrets, know-how, computer software and related documentation, drawing, blueprints, design, technical and quality manuals, and other technical information defendants supply to their own employees, customers, suppliers, agents or licensees, or other intellectual property, including all intellectual property rights under third party licenses. Intellectual property rights will be provided to the extent they are capable of being transferred to a purchaser either in their entirety, or through a license or sub-license;

(6) All leases, contracts, agreements, and commitments with third parties used primarily in connection with the provision of telecommunications services in the In-Region MSAs; and

(7) All transport facilities physically located in whole or in part within In-Region MSAs including all interests, contracts, and associated rights acquired by Qwest from Allegiance pursuant to 11 U.S.C. 363.

E. ''Excluded Assets'' means: (a) all Excluded Customer Contracts; (b) all transport facilities between MSAs outside of the In-Region MSAs; and (c) all Shared Systems.

F. ''Excluded Customer Contract'' means any single contract with a customer (a) that covers telecommunications services provided to locations within, as well as outside, the In-Region MSAs, (b) for which the majority of the services are provided outside of the In-Region MSAs (with ''majority'' measured by an objective measure approved by the United States in its sole discretion), and (c) for which it would be impossible or impractical for Qwest and the Acquirer(s) to divide the revenues and responsibilities under the contract. The term also includes any business and customer records and information, customer lists, credit records, and accounts, and historic and current business plans associated exclusively with provision of service via such contracts.

G. ''In-Region MSAs'' means the following Metropolitan Statistical Areas (MSAs): Denver, Colorado; Minneapolis, Minnesota; Phoenix, Arizona; Portland, Oregon; and Seattle, Washington.

H. ''Shared Systems'' means all operating and related systems acquired by Qwest from Allegiance pursuant to 11 U.S.C. 363 that (a) are predominantly used in connection with the provision of telecommunications services to customers in markets outside of the In-Region MSAs, including, but not limited to, order entry, provisioning, billing, network monitoring, and other systems, and (b) are not capable of being divided between the divested and retained businesses.

III. Applicability

A. This Final Judgment applies to Qwest and Allegiance, as defined above, and all other persons in active concert or participation with any of them who receive actual notice of this Final Judgment by personal service or otherwise.

B. Defendants shall require, as a condition of the sale or other disposition of all or substantially all of their assets or of lesser business units that include the Divestiture Assets, that the purchaser of those assets agrees to be bound by the provision of this Final Judgment, provided, however, that defendants need not obtain such an agreement from the Acquirer(s).

IV. Divestitures

A. Defendants are ordered and directed, within 75 calendar days after the filing of the Complaint in this matter, or five (5) days after notice of the entry of this Final Judgment by the Court, whichever is later, to divest the Divestiture Assets in a manner consistent with this Final Judgment to an acquirer acceptable to the United States in its sole discretion. The United States, in its sole discretion, may agree to an extension of this time period of up to three thirty-day periods, not to exceed ninety (90) calendar days in total, and shall notify the Court in such circumstances. Defendants agree to use their best efforts to divest the Divestiture Assets as expeditiously as possible.

B. In accomplishing the divestiture ordered by this Final Judgment, defendants promptly shall make known, by usual and customary means, the availability of the Divestiture Assets. Defendants shall inform any person making inquiry regarding a possible purchase of the Divestiture Assets that they are being divested pursuant to this Final Judgment and provide that person with a copy of this Final Judgment. Defendants shall offer to furnish to all prospective Acquirers, subject to customary confidentiality assurances, all information and documents relating to the Divestiture Assets customarily provided in a due diligence process except such information or documents subject to the attorney-client or work-product privileges. Defendants shall make available such information to the United States at the same time that such information is made available to any other person.

C. Defendants shall provide the Acquirer(s) and the United States information relating to the personnel involved in the production, operation, development and sale of the Divestiture Assets to enable the Acquirer(s) to make offers of employment. Defendants will not interfere with any negotiations by the Acquirer(s) to employ any defendant employee whose primary responsibility is the production, operation, development and sale of the Divestiture Assets.

D. Defendants shall permit prospective Acquirer(s) of the Divestiture Assets to have reasonable access to personnel and to make inspections of the physical facilities of the business to be divested; access to any and all environmental, zoning, and other permit documents and information; and access to any and all financial, operational, or other documents and information customarily provided as part of a due diligence process.

E. Defendants shall warrant to all Acquirers of the Divestiture Assets that each asset will be operational on the date of sale.

F. Defendants shall not take any action that will impede in any way the obtaining of necessary regulatory approvals, or operation or divestiture of the Divestiture Assets.

G. Defendants shall warrant to the Acquirer(s) of the Divestiture Assets that there are no material defects in the environmental, zoning, licenses or other permits pertaining to the operation of each asset, and that following the sale of the Divestiture Assets, defendants will not undertake, directly or indirectly, any challenges to the environmental, zoning, licenses or other permits relating to the operation of the Divestiture Assets.

H. Unless the United States otherwise consents in writing, the divestiture pursuant to Section IV, or by trustee appointed pursuant to Section V, of this Final Judgment, shall include the entire Divestiture Assets, and shall be accomplished in such a way as to satisfy the United States, in its sole discretion, that the Divestiture Assets can and will be used by the Acquirer(s) as part of a viable, ongoing telecommunications business. Divestiture of the Divestiture Assets may be made to one or more Acquirers, provided that in each instance it is demonstrated to the sole satisfaction of the United States that the Divestiture Assets will remain viable and the divestiture of such assets will remedy the competitive harm alleged in the Complaint. The divestitures, whether pursuant to Section IV or Section V of this Final Judgment,

(1) Shall be made to an Acquirer (or Acquirers) that, in the United States's sole judgment, has the intent and capability (including the necessary managerial, operational, technical and financial capability) of competing effectively in the business of telecommunications services; and

(2) Shall be accomplished so as to satisfy the United States, in its sole discretion, that none of the terms of any agreement between an Acquirer (or Acquirers) and defendants give defendants the ability unreasonably to raise the Acquirer's costs, to lower the Acquirer's efficiency, or otherwise to interfere in the ability of the Acquirer to compete effectively.

I. Upon the Acquirer(s)'s request and upon commercially reasonable terms and conditions, Qwest will, for a reasonable transitional period following divestiture, provide Acquirer(s) with (a) any services provided via Shared Systems; and (b) any interexchange services or transport over interexchange facilities acquired by Qwest from Allegiance pursuant to 11 U.S.C. 363 that are not included in the Divestiture Assets.

J. To the extent leases, contracts, agreements, intellectual property rights, licenses or commitments with third parties that are acquired by Qwest from Allegiance pursuant to 11 U.S.C. 363 and would otherwise be Divestiture Assets are not assignable or transferable, or such contracts (except for customer contracts), agreements, rights, licenses or commitments cover more than one MSA, including at least one MSA that is not an In-Region MSA, then Qwest is not obligated to assign or transfer such contracts, agreements, rights, licenses or commitments. In that event, or in the event that Qwest rejects any executory contract pursuant to 11 U.S.C. 365 which the Acquirer deems necessary to operate a viable ongoing telecommunications business in the In-Region MSAs, Qwest shall use its best efforts to obtain for the Acquirer the equivalent of the services or other rights that would have been provided but for said non-assignment, non-transfer, or rejection.

V. Appointment of Trustee

A. If defendants have not divested the Divestiture Assets within the time period specified in Section IV(A), defendants shall notify the United States of that fact in writing. Upon application of the United States, the

Court shall appoint a trustee selected by the United States and approved by the Court to effect the divestiture of the Divestiture Assets.

B. After the appointment of a trustee becomes effective, only the trustee shall have the right to sell the Divestiture Assets. The trustee shall have the power and authority to accomplish the divestiture to an Acquirer[s] acceptable to the United States at such price and on such terms as are then obtainable upon reasonable effort by the trustee, subject to the provisions of Sections IV, V, and VI of this Final Judgment, and shall have such other powers as this Court deems appropriate. Subject to Section V(D) of this Final Judgment, the trustee may hire at the cost and expense of defendants any investment bankers, attorneys, or other agents, who shall be solely accountable to the trustee, reasonably necessary in the trustee's judgment to assist in the divestiture.

C. Defendants shall not object to a sale by the trustee on any ground other than the trustee's malfeasance. Any such objections by defendants must be conveyed in writing to the United States and the trustee within ten (10) calendar days after the trustee has provided the notice required under Section VI.

D. The trustee shall serve at the cost and expense of Qwest, on such terms and conditions as the United States approves, and shall account for all monies derived from the sale of the assets sold by the trustee and all costs expenses so incurred. After approval by the Court of the trustee's accounting, including fees for its services and those of any professionals and agents retained by the trustee, all remaining money shall be paid to Qwest and the trust shall then be terminated. The compensation of the trustee and any professionals and agents retained by the trustee shall be reasonable in light of the value of the Divestiture Assets and based on a fee arrangement providing the trustee with an incentive based on the price and terms of the divestiture and the speed with which it is accomplished, but timeliness is paramount.

E. Defendants shall use their best efforts to assist the trustee in accomplishing the required divestiture. The trustee and any consultants, accountants, attorneys, and other persons retained by the trustee shall have full and complete access to the personnel, books, records, and facilities of the business to be divested, and defendants shall develop financial and other information relevant to such business as the trustee may reasonably request, subject to reasonable protection for trade secret or other confidential research, development, or commercial information. Defendants shall take no action to interfere with or to impede the trustee's accomplishment of the divestiture.

F. After its appointment, the trustee shall file monthly reports with the United States and the Court setting forth the trustee's efforts to accomplish the divestiture ordered under this Final Judgment. To the extent such reports contain information that the trustee deems confidential, such reports shall not be filed in the public docket of the Court. Such reports shall include the name, address, and telephone number of each person who, during the preceding month, made an offer to acquire, expressed an interest in acquiring, entered into negotiations to acquire, or was contacted or made an inquiry about acquiring, any interest in the Divestiture Assets, and shall describe in detail each contact with any such person. The trustee shall maintain full records of all efforts made to the Divestiture Assets.

G. If the trustee has not accomplished such divestiture within six months after its appointment, the trustee shall promptly file with the Court a report setting forth (1) the trustee's efforts to accomplish the required divestiture, (2) the reasons, in the trustee's judgment, why the required divestiture has not been accomplished, and (3) the trustee's recommendations. To the extent such reports contain information that the trustee deems confidential, such reports shall not be filed in the public docket of the Court. The trustee shall at the same time furnish such report to the United States who shall have the right to make additional recommendations consistent with the purpose of the trust. The Court thereafter shall enter such orders as it shall deem appropriate to carry out the purpose of the Final Judgment, which may, if necessary, include extending the trust and the term of the trustee's appointment by a period requested by the United States.

VI. Notice of Proposed Divestiture

A. Within two (2) business days following execution of a definitive divestiture agreement, defendants or the trustee, whichever is then responsible for effecting the divestiture required herein, shall notify the United States of any proposed divestiture required by Section IV or V of this Final Judgment. If the trustee is responsible, it shall similarly notify defendants. The notice shall set forth the details of the proposed divestiture and list the name, address, and telephone number of each person not previously identified who offered or expressed an interest in or desire to acquire any ownership interest in the Divestiture Assets, together with full details of the same.

B. Within fifteen (15) calendar days of receipt by the United States of such notice, the United States may request from defendants, the proposed Acquirer or Acquirers, and other third party, or the trustee if applicable additional information concerning the proposed divestiture, the proposed Acquirer or Acquirers, and any other potential Acquirer. Defendants and the trustee shall furnish any additional information requested within fifteen (15) calendar days of the receipt of the request, unless the parties shall otherwise agree.

C. Within thirty (30) calendar days after receipt of the notice or within twenty (20) calendar days after the United States has been provided the additional information requested from defendants, the proposed Acquirer or Acquirers, any third party, and the trustee, whichever is later, the United States shall provide written notice to defendants and the trustee, if there is one, stating whether or not it objects to the proposed divestiture. If the United States provides written notice that it does not object, the divestiture may be consummated, subject only to defendants' limited right to object to the sale under Section V(C) of this Final Judgment. Absent written notice that the United States does not object to the proposed Acquirer or upon objection by the United States, a divestiture proposed under Section IV or Section V shall not be consummated. Upon objection by defendants under Section V(C), a divestiture proposed under Section V shall not be consummated unless approved by the Court.

VII. Financing

Defendants shall not finance all or any part of any purchase made pursuant to Section IV or V of this Final Judgment.

VIII. Hold Separate

Until the divestiture required by this Final Judgment has been accomplished defendants shall take all steps necessary to comply with the Hold Separate Stipulation and Order entered by this Court. Defendants shall take no action that would jeopardize the divestiture ordered by this Court.

IX Affidavits

A. Within twenty (20) calendar days of the filing of the Complaint in this matter, and every thirty (30) calendar days thereafter until the divestiture[s] has been completed under Section IV or V, defendants shall deliver to the United States an affidavit as to the fact and manner of its compliance with Section

IV or V of this Final Judgment. Each such affidavit shall include the name, address, and telephone number of each person who, during the preceding thirty days, made an offer to acquire, expressed an interest in acquiring, entered into negotiations to acquire, or was contacted or made an inquiry about acquiring, any interest in the Divestiture Assets, and shall describe in detail each contact with any such person during that period. Each such affidavit shall also include a description of the efforts defendants have taken to solicit buyers for the Divestiture Assets, and to provide required information to prospective purchasers, including the limitations, if any, on such information. Assuming the information set forth in the affidavit is true and complete, any objection by the United States to information provided by defendants, including limitation on information, shall be made within fourteen (14) days of receipt of such affidavit.

B. Within twenty (20) calendar days of the filing of the Complaint in this matter, defendants shall deliver to the United States an affidavit that describes in reasonable detail all actions defendants have taken and all steps defendants have implemented on an ongoing basis to comply with Section VIII of this Final Judgment. Defendants shall deliver to the United States an affidavit describing any changes to the efforts and actions outlined in defendants' earlier affidavits filed pursuant to this section within fifteen (15) calendar days after the change is implemented.

C. Defendants shall keep all records of all efforts made to preserve and divest the Divestiture Assets until one year after such divestiture has been completed.

X. Compliance Inspection

A. For the purposes of determining or securing compliance with this Final Judgment, or of determining whether the Final Judgment should be modified or vacated, and subject to any legally recognized privilege, from time to time duly authorized representatives of the United States Department of Justice, including consultants and other persons retained by the United States, shall, upon written request of a duly authorized representative of the Assistant Attorney General in charge of the Antitrust Division, and on reasonable notice to defendants, be permitted:

(1) Access during defendants' office hours to inspect and copy, or at the United States's option, to require defendants provide copies of, all books, ledgers, accounts, records and documents in the possession, custody, or control of defendants, relating to any matters contained in this Final Judgment; and

(2) To interview, either informally or on the record, defendants' officers, employees, or agents, who may have their individual counsel present, regarding such matters. The interviews shall be subject to the reasonable convenience of the interviewee and without restraint or interference by defendants.

B. Upon the written requests of a duly authorized representative of the Assistant Attorney General in charge of the Antitrust Division, defendants shall submit written reports or interrogatory responses, under oath if requested, relating to any of the matters contained in this Final Judgment as may be requested.

C. No information or documents obtained by the means provided in this section shall be divulged by the United States to any person other than an authorized representative of the executive branch of the United States, except in the course of legal proceedings to which the United States is a party (including grand jury proceedings), or for the purpose of securing compliance with this Final Judgment, or as otherwise required by law.

D. If at the time information or documents are furnished by defendants to the United States, defendants represent and identifying in writing the material in any such information or documents to which a claim of protection may be asserted under Rule 26(c)(7) of the Federal Rules of Civil Procedure, and defendants mark each pertinent page of such material, ''Subject to claim of protection under Rule 26(c)(7) of the Federal Rules of Civil Procedure,'' then the United States shall give defendants ten (10) calendar days notice prior to divulging such material in any legal proceeding (other than a grand jury proceeding).

XI. No Reacquisition

Defendants may not reacquire any part of the Divestiture Assets during the term of this Final Judgment.

XII. Retention of Jurisdiction

This Court retains jurisdiction to enable any party to this Final Judgment to apply to this Court at any time for further orders and directions as may be necessary or appropriate to carry out or construe this Final Judgment, to modify any of its provisions, to enforce compliance, and to punish violations of its provisions.

XIII. Expiration of Final Judgment

Unless this Court grants an extension, this Final Judgment shall expire ten years from the date of its entry.

XVI. Public Interest Determination

Entry of this Final Judgment is in the public interest.

Date: _____

Court approval subject to procedures of Antitrust Procedures and Penalties Act, 15 U.S.C. 16.

United States District Judge.

Appendix D—Reply Declaration of Joseph Farrell

Before the Federal Communications Commission

In the Matter of Special Access Rates for Price Cap Local Exchange Carriers

[WC Docket No. 05–25]

AT&T Corp. Petition for Rulemaking to Reform Regulation of Incumbent Local Exchange Carrier Rates for Interstate Special Access Services

[RM No. 10593]

Reply Declaration of Joseph Farrell on Behalf of CompTel

I. Qualifications

1. I am Professor of Economics, Affiliate Professor of Business, and Chair of the Competition Policy Center at the University of California at Berkeley. Among other non-university professional activities, I was Chief Economist at the FCC in 1996–1997, President of the Industrial Organization Society in 1996, Editor of the Journal of Industrial Economics in 1995–2000, Deputy Assistant Attorney General and chief economist at the Antitrust Division of the U.S. Department of Justice in 2000–2001, and member of the National Academies of Science, Computer Science and Telecommunications Board in 2001–2004. I am a Fellow of the Econometric Society and a member of the Editorial Board of the journal Information Economics and Policy.

II. Overview

2. I begin by explaining why incumbent termination charges and certain kinds of optional volume or loyalty discounts are likely to exacerbate problems arising from well-known barriers to entry, especially when the inducement for customers to subscribe to these optional plans includes raising the price of the alternative, e.g., setting excessive basic rates for month-to-month service. I then discuss the use of price and cost

information for assessing competition in this market, and comment in particular on the Declaration of Dr. William Taylor.

III. Effects of ILEC Contracts on Competition

3. Economic and structural barriers to competitive entry into the special access market are well known and well documented. Ordover and Willig summarized several such barriers in a declaration submitted along with AT&T's petition that launched this proceeding.[1] Special access services are characterized by economies of scale and sunk costs, as well as substantial incumbent first-mover advantages such as rights-of-way and building access. As a result, competitive entry generally has been restricted to the highest capacity services provided in dense metropolitan areas. Any further impediments to entry, such as the ILEC contract provisions I describe below, exacerbate these inherent economic and operational barriers.

4. Among such incremental impediments to entry would be (a) excessive charges (typically payable by the customer) for terminating ILEC service, (b) commitments to purchase some minimum amount from the incumbent, with substantial penalties for non-compliance, and (c) any provisions such as volume or loyalty discounts under which a special access consumer pays the ILEC more for something else (such as service at another location) if it uses an entrant rather than ILEC special access in one location. For many customers on a discount plan, the basic month-to-month tariff may be the next-most preferred alternative. When the basic month-to-month plan specifies prices significantly above the competitive level, these discounted prices (and discounted prices in other plans) can also be above competitive levels. Moreover, when a monopoly offers proportional or relative discounts off its undiscounted prices in order to induce customers to agree to exclusionary provisions, it has an incentive to set the undiscounted price above even the monopoly level (because, rather than simply deterring demand, an increase above the monopoly level steers customers into the discount plans and also brings the discount prices closer to the monopoly level).[2] Thus, even if they have other efficiency rationales, such pricing schemes put an additional wedge into the incentive for the customer to contract with a competitive carrier whose long-run cost is below the ILEC's price.[3] They thus weaken entry as a constraint on an incumbent's overall price level, whether or not they fall into standard antitrust categories such as predatory pricing or tying.

5. ILECs have implemented such pricing schemes in their special access tariffs. SBC's ''Managed Value Plan'' (''MVP'') Tariff is an example. The MVP is an umbrella plan. Customers purchasing a wide range of special access products can include several such purchases in the MVP, which provides discounts in addition to term and volume discounts contained in their underlying tariffs from which customers purchase the special access circuits that they include in the MVP. The MVP discounts increase each year (9% in the 1st year, 11% in the 2nd, 12% in the 3rd, 13% in the 4th, and 14% in the 5th year). Carriers must spend at least $10 million annually on SBC special access services to be eligible.[4] The MVP establishes a ''Minimum Annual Revenue Commitment'' (MARC) that the carrier must maintain with SBC for the five-year term. The MARC is established when the carrier joins the MVP by taking a carrier's previous three months' billing for qualified services (defined as virtually all SBC transport services) multiplied by four.

6. Carriers receive the MVP discount on services purchased up to their MARC. The discount does not apply to services purchased in excess of the MARC unless the MARC is increased. The MARC can be increased (semi-annually, by a minimum of 5%), but cannot be decreased during the term of the MVP.

7. The MVP requires carriers to purchase at least 95% of their SBC transport services from SBC's interstate tariff, restricting their purchases of UNEs to less than 5%. (Recent tariff contract filings include a higher requirement of 98%).[5]

8. If a carrier fails to meet the MARC, it must either continue the contract and pay a shortfall penalty equal to the difference between its MARC and the actual amount spent, or terminate its contract and pay a termination penalty. For example, if the carrier terminates during year 3 of the plan, it pays 12.5% of the MARC for the remainder of year 3 and the remaining years of the agreement. The customer is also billed for any nonrecurring charges that were waived under the MVP agreement.

9. The termination penalty requires repayment of all MVP discounts received in the six months preceding the termination date plus a specified percentage of the MARC for the remainder of the term (10% if in year 1 or year 5, otherwise 12.5%). The table below lays out the termination penalties for a carrier with a MARC of $20 million that terminates its agreement at the beginning of a year. The table assumes that a discount was earned in each of the previous 6 months.

Year in which termination occurs	Current MVP discount rate (percent)	Discount earned in previous 8 months	Percent of Remaining commitment due	Remaining commitment due	Total penalty	Penalty (in months)
1	9	$0	10.0	$10,000,000	$10,000,000	6.0
2	11	900,000	12.5	10,000,000	10,900,000	6.5
3	12	1,100,000	12.5	7,500,000	8,600,000	5.27
4	13	1,200,000	12.5	5,000,000	6,200,000	3.7

[1] In the Matter of AT&T Corp. Petition for Rulemaking To Reform Regulation of Incumbent Local Exchange Carrier Rates for Interstate Special Access Services, RM No. 10593. Declaration of Janusz A. Ordover and Robert D. Willig in support of AT&T's Petition, at ¶ 38–45.

[2] The economics of price-setting once a subset of customers become entitled to a percentage discount off a list price are analyzed by Borenstein, Severin, 1996. ''Settling for Coupons: Discount Contracts as Compensation and Punishment in Antitrust Lawsuits,'' Journal of Law & Economics, University of Chicago Press, vol. 39(2), pages 379–404. Professor Borenstein shows that such discounts do not lower prices overall but rather implement a transfer from non-discount customers to discount customers, with almost no effect on average price or on the seller's profit. Moreover, if entitlement to the discount is based on agreeing to exclusionary terms, such arrangements further harm consumers in the long run. In price flex areas, even basic tariffs are unregulated, and the rates in these tariffs can be, and have been, increased by the ILEC.

[3] The basic economics here were explored in the well-known article by Aghion, Philippe and Bolton, Patrick. ''Contracts as a Barrier to Entry,'' American Economic Review, June 1987, 77(3), pp. 388–401. See also Joseph Farrell, ''Deconstructing Chicago on Exclusive Dealing,'' Antitrust Bulletin, forthcoming, available at *http://repositories.cdlib.org/iber/cpc/CPC05-053/*. In particular, I explain there why discounts to customers in return for signing exclusive or exclusionary contracts may not make the customers better off.

[4] If the customer has a national footprint, it must meet the $10 million minimum in each SBC region.

[5] *See* e.g.. SWBT Tariff FCC No. 73, Section 41.31.

Year in which termination occurs	Current MVP discount rate (percent)	Discount earned in previous 8 months	Percent of Remaining commitment due	Remaining commitment due	Total penalty	Penalty (in months)
5	14	1,300,000	10.0	2,000,000	3,3000,000	2.0

10. The Remaining Commitment Due is calculsted as the MARC over the remaining years of the contract times the penalty rate (labeled ''% of Remaining Commitment Due''). The total penalty is the sum of the Remaining Commitment Due and any discount earned in the previous 6 months. In the first two years of the contract, the penalty amounts to more than 50% of the annual MARC. In the last year, it falls to about 15% of the annual MARC. In addition to this penalty, the customer may incur termination penalties specified in the underlying tariff for the services included in the MVP. In some cases, these penalties amount to 40% of the monthly recurring rate over the remaining term of the tariff.[6]

11. The MVP is structured in a way that can make it unprofitable for a competitor to win any modest portion of a customer's business, even if the incumbent's price exceeds the competitor's long-run cost. Essentially, it sets up an automatic and sometimes drastic price cut for any portion of the customer's business that the customer is considering switching to a competitor. For example, consider a customer that spends $20 million on special access services supplied by SBC. The customer can either (1) sign the MVP contract and purchase $20 million in special access services from SBC or (2) purchase 20% of its services from a CLEC and 80% from SBC. In scenario (1), the carrier receives an average of 11.8% discount (ignoring discounting) from SBC over the length of the contract,[7] thus its total expenditure is $17.64 million per year. In scenario (2), the carrier would not be able to enter into an MVP agreement because the MARC is based on 100% of historical revenues. Thus, for the 80% of its special access requirements that it purchased from SBC, the customer would spend $16 million. The carrier would save money in this scenario only if the competitive carrier charged less than $1.64 million for the remaining 20% of the customer's demand, a discount of 59% off SBC's $4 million price before MVP discounts.

12. Once a MVP agreement is signed, the marginal price of special access services for special access spending up to the MARC is zero, because a customer that misses the MARC is required to make up the shortfall by paying a penalty. The marginal price if the total spending is above the MARC is SBC's rate before the MVP discount is deducted (unless the MARC is increased). Because the MARC cannot be decreased, a customer whose demand does not grow cannot switch to a competitive carrier for part or all of its special access spending without incurring significant penalties.

13. A customer with increasing expenditures on special access may find it economical to use a competitor to serve its new demand. Consider the example of a customer that entered into an MVP agreement with a MARC of $20 million. Suppose that the customer established business in a new area, requiring special access services worth $10 million in that area. The carrier could either include this new demand for special access service in its MARC, increasing the MARC by $10 million, and then receive the 11.8% average discount on this new commitment; or else it could go to a competitor that would only need to offer the 11.8% discount off SBC's pre-MVP prices to match the discount offered by the MVP plan.

14. However, if this $10 million in new growth in the network occurs at the same time as a reduction of $2 million in the customer's original footprint, then the situation changes. In this case, the first $2 million of the new growth would cost the customer nothing if it used SBC, since the customer had a commitment to spend $20 million on SBC's special access services. If all the new business went to SBC, the MARC could be increased to $28 million and the discounted payment would be $24.696 million. If the customer wanted to use a non-ILEC provider for the entire $10 million of new growth business, it would still have to maintain the $20 million MARC commitment and, with $18 million spent on special access purchased from SBC, it would not receive any MVP discount. Thus, it would pay $20 million to SBC. Using the non-ILEC provider would be lower cost only if its total price for the new growth was less than $4.7 million, a 53% discount off SBC's (pre-MVP) prices of $10 million. In other words, the rival must beat a price that is less than half of the ILEC's pre-MVP price.

15. Thus in some circumstances a customer switching a part of its business to a non-ILEC provider could lose not only the discount on the portion switched, but also the MVP discount on the portion that remained with the ILEC. When the competitor cannot win the entire business (if, for example, it has loops to some but not all of the customer's locations), it is effectively foreclosed from serving that customer.

16. As a result, the MVP and similar pricing plans can have the effect of requiring a competitive carrier to beat a marginal price that is well below the average price that special access customers pay the ILEC. That is, the ILEC can charge a price (11.8% below its pre-MVP price) that is well above a competitive carrier's cost, and the competitor will nevertheless find it unprofitable to enter on a small scale, because the customer is penalized on its inframarginal SBC business for giving marginal business to the competitor.[8]

17. The effects of the MVP are magnified when the underlying tariffs for the special access services purchased by a customer contain similar discounts and penalties. To illustrate, consider Southwestern Bell Telephone Company's DS1 Term Payment Plan (DS1 TPP).[9] The base payment in the TPP is circuit-specific—it requires commitments to specific circuits for the term of the contract. But competing carriers often have a considerable amount of customer churn. For such customers, SBC offers an option (the DS1 High Capacity Service Portability Commitment) that waives the specific

[6] Southwestern Bell Telephone Company, Tarffic F.C.C., No. 72, 2nd Revised Page 7–68.3.5.

[7] The 11.8% average discount is the arithmetic mean of the discounts of 9%, 11% 12%, 13% and 14%, offered in each of the five years of SBC's MVP.

[8] Like many exclusionary strategies, this can be defeated if entrants can realistically enter on a large scale and serve all (or a sufficient set of) customers. Thus it is exclusionary only if that is unrealistic. It is my understanding that after years of policymakers encouraging CLEC entry, CLECs still directly address only a very limited set of buildings. See Review of the Section 251 Unbundling Obligations of Incumbent Local Exchange Carriers, CC Docket No. 01–338, Report and Order and Order on Remand and Further Notice of Proposed Rulemaking, 18 FCC Rcd. 16978, 17155, n.856 (2003). (''Both competitive LECs and incumbent LECs report that approximately 30,000, i.e., between 3% and 5% of the nation's commercial office buildings, are served by competitor-owned fiber loops.'').

[9] Tariff F.C.C. No. 73, Section 7.2.

circuit termination penalties described above, allowing customers to add and remove circuits without penalty. Instead of circuit-specific commitments, the customer commits to a level of DS1 channel terminations. The Portability Commitment lasts for three years. The commitment level is 100% of the total DS1 channel terminations in service in the month preceding the start of the agreement. This includes DS1 under term commitments and month-to-month arrangements.

18. Each month, the total number of 2, 3, 5, and 7 year DS1 TPP Channel Terminations for the previous month will be calculated and measured against the commitment level. If this total is less than 80% of the commitment level, then the customer is billed a shortfall penalty equal to the difference between 80% of the CL and the actual number purchased times the non-recurring charge. If this total is more than 124% of the CL, then the customer is billed an adjustment factor equal to the difference between 124% of the CL and the actual number purchased times the non-recurring charge.[10] The customer may increase its CL by submitting a written request, and is likely to do so given the ''growth penalty'' that applies if it does not promptly commit its unexpected demand growth to SBC.

19. If the customer terminates the Portability Commitment or wants to decrease the CL prior to the end of the 3-year commitment, termination liabilities apply. The termination liability is calculated as the decreased number of channel terminations multiplied by the prevailing month-to-month recurring rate multiplied by the number of months remaining in the portability commitment.

20. To supply a portion of the services a customer has placed in the MVP umbrella, a competitor may have to reduce its rates to make up for payments such as the shortfall penalty and/or termination liability specified in the DS1 TPP. These payments are in addition to the penalties in the MVP. Together, the penalties in all the tariffs for services that a customer switches to a competitor are likely to be high enough to make the customer unprofitable for the competitor to win, even when the ILEC's overall level of prices for special access is above the competitor's long-run cost. Again, these provisions, and others like them in the various term and volume discount plans offered by the ILECs artificially increase a customer's cost of switching, and raise competitors' costs of acquiring customers.

21. It is a tempting fallacy to think that optional discount plans cannot be harmful simply because consumers select them voluntarily. The claim that voluntary discounts cannot harm consumers assumes that basic month-to-month rates are not affected, but in fact, once an ILEC has contracted with some of its customers for a percentage discount off the month-to-month tariff, it has an incentive to raise the latter above the level that it would have chosen otherwise.[11] In the longer term, exclusionary contracts can be expected to harm competition and customers, whether or not they decrease prices in the short run.

IV. Dr. Taylor's Analysis Cannot Show That ILECs Lack Market Power

22. Dr. William Taylor has submitted a report [12] arguing that price data show that Verizon lacks market power. The basic syllogism is that average revenue per unit measures have fallen, hence prices have fallen, hence there is no market power. Unfortunately, each step of this syllogism is fallacious. As a preliminary matter, I examine Dr. Taylor's claim that the average revenue per special access line has fallen over time. Next, I examine the first part of his syllogism, that reductions in the average revenue per line imply that prices of special access products have fallen. Finally, I analyze the second part of his syllogism, that reductions in price imply the absence of market power.

1. Flaws in the Average Revenue per Line as a Measure of Price

23. Dr. Taylor claims that ''various measures of average revenue per circuit have fallen even as the demand for special access services has increased.'' [13] After describing six limitations [14] of his chosen price measure, the average revenue per line, he concludes: ''Nevertheless, even with those caveats, the picture that emerges from the ARMIS average revenue per line data is quite clear: Average revenue per line has decreased over the 1996–2004 period and decreased faster during the pricing flexibility period (2001–2004).'' [15] Dr. Taylor did not include sufficient information to verify his calculations.

24. Dr. Taylor adjusted Special Access Revenue as reported in the ARMIS records to remove DSL revenues using data he obtained from Verizon on its DSL revenues for 2002–2004.[16] These DSL revenues are not part of the public record, and Dr. Taylor does not include the data he obtained from Verizon in his Declaration. In addition, he removed DSL revenues for years prior to 2000 based on the observed growth of DSL revenues in the years of which he had data. Without the underlying data, it was not possible to judge whether his calculations were correct or whether the extrapolation was reasonable.

25. Dr. Taylor relied on the number of access lines reported in ARMIS 43–08, columns fj and fk.[17] The ARMIS Report instructions require carriers to calculate the number of special access lines as follows:

> ''The number of 64 kbps or equivalent digital special access lines terminated at the customer designated premises: * * * Where DS–3 or DS–1 service is provided without individual 64 kbps circuit terminations, multiply the number of DS–3 terminations by 672 and the number of DS–1 terminations by 24 when calculating the value for this column.'' [18]

For DS1 and DS3 lines that are provided with individual 64 Kbps circuit terminations,[19] the ARMIS data appear to provide a reasonable measure of capacity as represented by voice grade equivalent lines. For DS1 and DS3 lines that are provided without individual circuit termination, the ARMIS data would appear to overestimate the line count since it assumes that the entire capacity is used, whether or not it is, in fact, used. That is, a customer who needs only 12 DS0s worth of capacity, but who but buys a DS1 because it is less costly than 12 DS0s, is assumed to purchase 24 DS0s if the ILEC is not asked to provide individual circuit terminations. Accordingly, the average revenue per voice-grade equivalent is artificially reduced.

26. I do not have the data to verify this downward bias in Dr. Taylor's estimate of the ''price.'' Nor can I verify that this bias has not increased over time, contributing, at least in part, to Dr. Taylor's finding that the average revenue per line has fallen over time. Since data communications lines often do not need individual 64 Kbps terminations, and since data

[10] Because only 2, 3, 5, and 7-year commitments are counted when the shortfall penalty is calculated, the portability commitment penalizes carriers who have a large portion of their DS1 in month-to-month or 1-year commitments, thus providing incentive to enter into longer contracts.

[11] See Borenstien, *supra.*

[12] Declaration of William E. Taylor on Behalf of Verizon, In the Matter of Special Access Rates for Price Cap Local Exchange Carriers, WC Docket No. 05–25. Henceforth, Taylor Declaration.

[13] Taylor Declaration, at ¶ 9.

[14] Taylor Declaration, at ¶ 15.

[15] Taylor Declaration at ¶ 16.

[16] Taylor Declaration at ¶ 18.

[17] Taylor Declaration at footnote 10.

[18] FCC Report 43–08.

[19] A 64 Kbps line is equivalent in capacity to a voice grade circuit.

communications grew more rapidly than voice communications during the period at issue, there was likely an increase in the fraction of lines for which the ARMIS reporting requirement resulted in an overcount of special access lines. If so, the ARMIS line count would grow at a faster rate than would be warranted by the actual growth in demand for capacity. The calculated average revenue per ARMIS line would then decline more quickly than the average revenue per unit of capacity actually demanded.

27. In sum, Dr. Taylor's conclusions regarding the decline of the average revenue per line over time cannot be verified with the data available to me. There are sound reasons for believing that at least a part of the reduction may be due to ARMIS reporting conventions but this portion of the reduction cannot be quantified with the available data.

28. Much of Dr. Taylor's analysis focuses on ''various measures of the average revenue per circuit.'' [20] Dr. Taylor asserts that this is a reasonable proxy for price: ''Average revenue per voice-grade equivalent circuit is a reasonable measure of the price that customers actually pay for the special access service they receive.'' [21]

29. To calculate the average revenue per voice-grade equivalent circuit, Dr. Taylor divides the total revenue obtained from the services in question by the number of special access lines obtained from ARMIS 43–08. As I have indicated earlier, the ARMIS reporting convention results in an overcount of the demand for capacity, especially for lines used for data communication.

30. The following illustrative example demonstrates my earlier point that the ARMIS measure of special access lines overstates the appropriate measure of capacity, and, as a result, contributes to underestimating the price per unit capacity actually paid by customers. Suppose a DS1 is priced at $365 per month, and a DS3 is priced at $2,290 per month.[22] These prices are assumed to remain constant in this example. Therefore, the actual change in prices in this example is zero.

31. Consider a consumer who initially purchases 6 DS1 circuits for a total charge of $2,190. If the consumer uses all 144 voice-grade circuits in the 6 DS1s for voice traffic, the average revenue per used circuit would be $2,190/144 = $15.21. Suppose the consumer's calling volume increases, and 168 voice-grade circuits are now needed to carry the new calling volume. The consumer could order another DS1 for an additional $365, and use the additional 24 voice-grade circuits to carry the additional traffic. Alternatively, the consumer could replace the 6 DS1s with a DS3, set up 168 channel terminations on the DS3 and obtain the same quality of service that he would have obtained on 7 DS1s. The additional cost of the DS3 would be only $100 ($2,290 for the DS3 less $2,190 for the 6 DS1s already in place). The DS3 would be less expensive than 7 DS1s, even though a large fraction of the DS3 was left idle.

32. If the DS3 were provided with individual circuit terminations, the ARMIS record would reflect 168 special access lines, and the average revenue per unit would be $13.63 for a price reduction of 10.4%. Thus this ARMIS record would show a relatively modest reduction in price even though no prices had been reduced.

33. If the DS3 were provided without individual circuit terminations, the ARMIS record would reflect 672 terminations, and the average revenue per line would be $3.41 for a much larger apparent price reduction of 77.6%.

34. But recall that the actual change in prices in this example is zero. The change in prices as measured by the average revenue per ARMIS line is −10.4% when channel terminations are provided by the BOC. The change in prices as measured by the average revenue per ARMIS line is −77.6% when channel terminations are not provided by the RBOC. In this example, the average revenue per line falls regardless of the way in which ARMIS records the number of lines demanded by the customer, even though no prices have fallen. In general, the change in average revenue per ARMIS line will understate the change in prices paid by consumers, and in times of growing demand, overstate the reduction (if any) in the prices paid by consumers.

35. Dr. Taylor tries to correct for some of the limitations of average revenue per line by calculating separate average revenues for DS1 and DS3 lines. Shifts from DS1 to DS3 circuits do not affect the average revenue per line for each category, removing one flaw in the average revenue measure. Dr. Taylor found that: ''DS–1 and DS–3 prices fell dramatically for Verizon East between 2000 and 2001; in fact, they fell at a much faster rate than would have been required by the price cap formula. Possible explanations include a national recession and the telecommunications industry meltdown.'' [23]

36. But DS–1 and DS–3 lines are not commodities supplied by price-takers with upward-sloping supply curves. A recession or a telecommunications meltdown may lower demand but there is no clear reason to believe it raises demand elasticity or lowers the incremental cost of supplying such lines. A more natural ''composition effect'' explanation of this price reduction is available. Since DS1 lines are sold at different prices (with lower prices for longer term commitments and larger volumes purchased), a shift in demand from high price contracts to low price contracts can result in a reduction in average revenue per line even though no prices were reduced. The same plausible explanation applies to DS3 lines. Thus one cannot conclude that Dr. Taylor's partial disaggregation of all special access lines into DS1 and DS3 lines repairs the flawed average revenue measure.

37. For reasons described above, when customers upgrade from multiple DS0s to a DS1 or from multiple DS3s to OCn services, the decrease in average revenue per access line will overestimate the price reduction, if any.

38. The limitations of measures similar to the Average Revenue per Special Access Line are well known. Indeed, in his published work on the long-distance market, Dr. Taylor pointed out several flaws with a related measure of price—the Average Revenue per Minute (ARPM) for long-distance calls. Dr. Taylor constructs a simple example with two products in which ''ARPM declines despite the fact both of the component usage prices have increased.'' [24] Dr. Taylor constructs other simple examples to illustrate deficiencies of average revenues as measures of price, and points out that ''while AT&T's reported ARPM has declined, competition has not brought benefits of lower prices to low-volume users.'' [25]

39. In his Declaration, Dr. Taylor states that ''[t]he fact that prices fell much faster than GDPI–PI–X indicates that competitive forces have constrained LEC special access pricing, as anticipated by the Commission's pricing flexibility decision.'' [26] To reach this conclusion, Dr. Taylor compares changes in the Average Revenue per

[20] Taylor Declaration, at ¶ 9.

[21] Taylor Declaration, at footnote 7.

[22] These are standalone monthly rates charged by SBC in California in July 2004, as reported in the Declaration of M. Joseph Stith, WC Docket No. 04–313, Attachment 1, page 13 of 20.

[23] Taylor Declaration, at ¶ 29.

[24] William E. Taylor and J. Douglas Zona. ''An Analysis of the State Of Competition in Long-Distance Telephone Markets.'' Journal of Regulatory Economics 11:227–255 (1997). Page 238. Henceforth, Taylor and Zona.

[25] Taylor and Zona, page 240.

[26] Taylor Declaration at ¶ 17.

Line to the changes in the Price Cap Index (PCI). This is not a useful comparison. ILECs are required to compare an Average Price Index (API) to the PCI, and report this comparison to the FCC. Table 1 below, based on data submitted by Verizon BNTR to the FCC, shows that for special access lines taken as a whole, the actual change in prices is almost exactly equal to the reduction required by the price cap plan, strongly suggesting that the price cap was a binding constraint on Verizon's special access prices, contrary to Dr. Taylor's suggestion that competition has driven prices below the level required by price cap regulation.

TABLE 1.—API AND PCI FOR VERIZON (BNTR)

	2002	2003	2004	2005
Total Special Access PCI	47.88	45.73	43.40	43.47
Total Special Access API	47.88	45.73	43.40	43.33

Source: Verizon TRP Filings.

Moreover, rates in pricing flexibility areas have increased,[27] suggesting that competitive carriers have not been able to discipline the incumbents' special access prices in areas that have been deemed competitive.

2. The Relationship between Trends in Prices and Market Power

40. Dr. Taylor's Declaration largely focuses on attempting to show that prices for special access have fallen over time. He infers that Verizon does not have market power. For instance, in his Declaration he writes:

''A careful analysis of that data does not show that Verizon has been able to exercise market power. On the contrary, prices for individual DS1and DS3 services, as well as average revenue per special access circuits have fallen steadily for special access circuits.'' At 6.

''Customers have benefited from additional competition and pricing flexibility as demonstrated by the continuing expansion of demand volumes accompanied by continuing falling prices.'' At 4.

''The NPRM entails a second analysis that entails accessing the level of and changes in the degree of competition in the markeplace, ''short of conducting a burdensome market power analysis'', against which the Commission warned in ¶ 72 of the NPRM. Unfortunately, after that warning, the NPRM (¶ 72–111) immediately sets out precisely the information requirements and calculations that would be necessary to undertake a market power analysis for special access services. *Fortunately, however, the evidence from recent trends in quantities and prices of special access services makes such an analysis unnecessary, as the primary price and quantity data show no signs of the exercise of market power by incumbent providers.* * * Using a variety of data sources, I show that various measures of average revenue per circuit have fallen even as the demand for special access services has increased.''* At 8–9. (Emphasis added).

41. But even if Dr. Taylor were correct that a decline in average revenue is a reasonable proxy for a decline in price, price reductions do not prove lack of market power. Even a monopoly will reduce price if marginal costs fall or if demand becomes more elastic. In addition a firm with decreasing, but still very substantial, market power will reduce prices for that reason.

42. While there are pitfalls in using price-cost data to make references about the state of competition, it is clear that in any such endeavor it logically is the relative levels of price and cost, not the rate of change of price, that matter. Moreover, the Commission is concerned about whether prices are just and reasonable, not (only) with determining whether firms ''lack market power.''

43. In his published work on competition in long distance markets, Dr. Taylor has argued that competitive prices will allow successful firms to recover their forward-looking incremental costs including an acceptable return on its investment.[28] He observed that the presence of high operating margins supports the conclusion that regulated competition has not produced substantiall consumer benefits.[29] Dr. Taylor also recognizes that lower prices and increased demand can somtimes be mistakenly ascribed to competition.[30]

44. In his Declaration in this Proceeding, Dr. Taylor himself recognizes the limitations of an analysis of trends in prices without information about costs. ''Treating a small but significant nontransitory increase in price as an exercise of market power assumes the initial prices is a competitive market price. Suppose 10 years of price cap regulation had constrained ILEC special prices to lie below a competitive market level. In that case, a significant and sustained price increase when price cap regulation was removed would be welfare-increasing rather than an exercise in market power.''[31] Elsewhere in the Declaration, Dr. Taylor states: ''In antitrust economics, this error—treating an increase from the current price as an exercise in market power—is called the ''Cellophone fallacy''* * *''[32] However, Dr, Taylor's analysis does not actually compare his measure of the BOC's special access prices to any benchmark of cost.

45. Dr. Taylor's comparison of the average revenue per special access line to this price reductions required under price caps provides to useful information on the relationship of prices to costs.[33] Under traditional price caps, the price cap formula of inflation (or GDP–PI) less increase in productivity in the telecommunications sector (or the X-factor) is intended to capture the expected reduction in cost that would be achieved by the regulated firm operating efficiently. As Dr. Taylor himself points out, actual price changes may vary dramatically from the average change embodied in the price cap, so that differences between prices (especially when they are misrepresented by the average revenue per line) and the price cap in the short run may not contain useful information on the state of competition, as indicated by the price-cost margin.[34] In the event, the cap under the CALLS plan was never intended to represent expected changes in cost, and a comparison of price changes to GDP–PI—X during the CALLs period is not helpful in determining whether prices are converging to the relevant costs.

46. Dr. Taylor also suggests that problem of allocating common costs make direct price-cost comparison impossible. This is correct if the costs of special access are predominantly common costs as between special access

[27] Evidence supporting this point can be found in: In the Matter of Special Access Rates for Price Cap Local Exchange Carriers, WC Docket No. 05–25. Comments of CompTel/ALts, Global Crossing North America, Inc., and NuVox Communications, Pages 6–9.

[28] Taylor and Zona, page 230.

[29] Taylor and Zona, page 229.

[30] Taylor and Zona, page 237.

[31] Taylor Declaration at 36.

[32] Taylor Declaration at footnote 21.

[33] See Figure 3, and the associated discussion. Taylor Declaration, page 9.

[34] Taylor Declaration at 31.

and other services, but not if a large fraction of the cost is the cost of customer-specific last-mile infrastructure that the customer uses for special access. Indeed, as I have argued elsewhere,[35] a core principle of Telecommunications Act unbundling is that the common-cost problem much less severe if one is pricing network elements such as loops than if one is pricing services such as long-distance access. I understand that special access is essentially the full bundle of services of the loop or similar last-mile infrastructure (perhaps together with transport).

47. The BOCs have not submitted estimates of the forward-looking economic costs of special access, focusing instead on limitations of available accounting costs in the ARMIS records. However, forward-looking economic costs can be estimated using two reasonable approaches. First, UNE rates for dedicated transport are often based on forward-looking economic costs calculated using an engineering-economics cost proxy model. I understand that high capacity UNEs (DS1s and DS3s) and perhaps especially EELs are the functional equivalent of special access, so directly relevant UNE rates exist. Second, the rates charged by a competitive provider of special access services are unlikely to be systematically below its forward-looking economic cost. Thus UNE rates and CLEC special access charges may be useful benchmarks for comparing an ILEC's special access rates versus forward-looking long-run cost.

48. The record in this proceeding includes a substantial amount of information on the relationship between UNE prices and special access prices, including:

''In comparing special access vs. UNE prices, Worldcom found the jDS1 UNE loops were about 18% less than comparable special access prices and DS3 UNE loops 28% less. The fixed portion of transport under UNEs was about 10% less for DS1s and the fixed DS3 transport UNE prices were actually higher than special access. On the other hand, major variances occurred on interoffice mileage (average DS1 UNE per mile charge was $1.52 vs. $13.72 for special access, and for DS3s it was $23.35 vs. $57.84).'' [36]

''In Atlanta, the mileage component of a 10-mile (UNE) EEL was $1.80, whereas BellSouth charge $180 in mileage in MTM special access prices or $80 under their discount plan. Similar disparities are found in Southwestern Bell and Ameritech (pp 21–22, 33–34). Additionally, mileage costs were twice as high in price flex MSAs ($8/mile) than under price caps ($3.90/mile).'' [37]

49. A study by Mr. Joseph Stith of AT&T compares (a) special access rates in price cap areas to the corresponding rates in areas where the BOCs have been granted pricing flexibility, (b) price cap rates to the corresponding UNE rates, and (c) price flexibility rates to UNE rates. He finds that ''for a 10-mile circuit the Bells' tariffed rates are on average, significantly above their rates for equivalent UNEs.'' [38] Mr. Stith finds similar results for zero-mile circuits.

50. In its Comments in this Proceeding, BellSouth Submitted a study by RHK showing that ILEC prices substantially exceed either comparable UNE rates or competitors' rates.[39] The study reports that BellSouth's average special access prices are $240, $1,356 and $5,077 for DS1, DS3 and OCN circuits. The average prices for BellSouth's UNE transport element for DS1 and DS3 circuits are reported to be $141 and $623, or about half the corresponding special access prices. The average prices charged by competitive carriers for DS1, DS3 and OCN circuits are reported to be $140, $700, and $3,300, respectively, or about half the corresponding Bell special access prices. Since UNE prices are based on estimated forward-looking costs and since competitive carriers presumably seek at least to cover their forward-looking costs, the RHK study is consistent with the conclusion that BellSouth's special access prices considerably exceed forward-looking costs.

51. The RHK study purports to show that BellSouth has a small revenue share for many categories of special access services, yet it reports that BellSouth's prices for these services are significantly higher than the prices charged by competing carriers, and also considerably higher than UNE rates. The study does not explain why, in an apples-to-apples comparison, BellSouth is able to charge a substantial premium over its competitors, and maintain prices in excess of UNE rates based on forward-looking costs.

52. The evidence thus suggests that special access rates are often significantly above corresponding UNE rates. The UNE rates are based on forward-looking cost, incorporating (unlike competitive carriers' pricing) ILEC-level economies of density. ILEC's special access rates are also considerably higher than the rates charged by competitive carriers.

Certification

I hereby certify, under penalty of perjury, that the statements and information contained in my declaration are correct and true to the best of my knowledge.

Joseph Farrell,
29 July, 2005.

Attachment 3—Comments of Elliot Spitzer, Attorney General, State of New York, on the Proposed Final Judgments

In The United States District Court For The District of Columbia

United States of America, Plaintiff, v. SBC Communications, Inc. and AT&T Corp. Defendants; Judge: Emmet G. Sullivan

[Civil Action No. 1:05CV02102]

United States of America, Plaintiff, v. Verizon Communications Inc. and MCI, Inc., Defendants; Judge: Emmet G. Sullivan

[Civil Action No. 1:05CV02103]

Comments of Eliot Spitzer, Attorney General, State of New York, on the Proposed Final Judgments

Pursuant to Section 2(b) of the Antitrust Procedures and Penalties Act, 15 U.S.C. 16, Eliot Spitzer, the Attorney General of the State of New York, respectfully submits the following comments on the Proposed Final Judgments [1] (''PFJs'') in the above referenced matters.

I. Introduction

The New York Attorney General (''AG'') is charged with enforcing state and Federal antitrust and consumer protection laws. The AG advocates in administrative and judicial proceedings on behalf of New York State, consumers, and the public interest generally. The AG has long advocated on behalf of competition in the telecommunications sector in both the national and state legal and regulatory area. The AG has participated actively in numerous New York Public Service Commission proceedings to support competition in New York State and has filed comments there as well as at the FCC on a broad range of telecommunications

[35] Joseph Farrell, ''Creating Local Competition'', Federal Communications Law Journal 49:1, November 1996, 201–215.

[36] Henry G. Hultquist, Worldcom, Letter to Marlene H. Dortch, 10/29/02, FCC, Docket CC 96–98, 98–147, 01–338 (p. 7).

[37] NuVox, Initial Comments, 10/4/04, WC 04–313, p. 22.

[38] Declaration of M. Joseph Stith, WC Docket No. 04–313, September 30, 2004. At 17.

[39] Declaration of Stephanie Boyles, June 8, 2005. WC Docket No. 05–25.

[1] Department of Justice, Antitrust Division, *United States* v. *SBC Communications Inc. and AT&T Corp.*; Competitive Impact Statement, Proposed Final Judgement, Complaint, Stipulation, 70 FR 74334 (Dec. 15, 2005); Department of Justice, Antitrust Division, *United States* v. *Verizon Communications Inc. and MCI, Inc.;* Competitive Impact Statement, Proposed Final Judgement, Complaint, Stipulation, 70 Fed. Reg. 74350 (Dec. 15, 2005).

competition issues over the years, including comments with both agencies regarding the proposed Verizon-MCI merger.[2]

Through Verizon New York Inc., Verizon Communications Inc. (''Verizon'') provides regulated and unregulated telecommunications services in New York, and is the dominant provider in multiple service markets from Maine to Virginia. MCI Inc.'s (''MCI'') subsidiaries provide telecommunications services on a regulated and unregulated basis in New York and, since before the breakup of AT&T in 1984, MCI has played a key competitive role in business, long distance and local service markets.

While SBC Communications, Inc. (''SBC'') has had only a limited competitive presence in New York, it provides regulated and unregulated telecommunications services and is the dominant provider in multiple service markets in 13 states.[3] AT&T Corporation (''AT&T'') provides telecommunications services on a regulated and unregulated basis in New York and is the nation's largest provider of enterprise services, while also establishing itself as a leading long distance and local service competitor.

Together, MCI and AT&T maintain the most comprehensive local and long-haul facilities which are required by major enterprise customers. Since the Telecommunications Act of 1996, AT&T and MCI have also established themselves as the most successful competitive local exchange carriers (''CLECs'') in New York and nation-wide.

Telecommunications are vital to New York's information-intensive economy, which is the national and global center of the financial services and other major industries. For over a generation, increased competition in telecommunications has been the driving force behind fair prices, high quality, innovative offerings and greater access to services. As a result of New York City's economic preeminence, increased competition for telecommunications services took hold here before other parts of the state and country, and has been the most robust. The Tunney Act process can play an essential role in ensuring that strong competition continues in New York and nationwide.

While the U.S. Department of Justice (''DOJ'') attempts to downplay the role for the Court in reviewing the adequacy of the PFJs, Congress has made this Court the final arbiter of the propriety of these mergers under the antitrust laws. The Court must ''determine that the entry of such judgment is in the public interest,'' and, if it cannot so find, it must reject the PFJ unless more adequate provisions are made to protect the public interest. 15 U.S.C. 16(e). *See, e.g., United States* v. *Microsoft Corp.*, 56 F.3d 1448, 1458 (D.C. Cir. 1995) (''Congress, in passing the Tunney Act, intended to prevent 'judicial rubber stamping' of the Justice Department's proposed consent decree[s]'') (reversing district court's rejection of consent decree on other grounds).

Taken together, these mergers will change the face of the telecommunications industry. Post-merger these two companies will overwhelmingly dominate telecommunications markets and will be in a position to inhibit competition, customer choice and innovation. The remedies contained in the PFJs are unlikely to constrain the merged entities.

There are two key areas of concern. First, the PFJs inadequately address local private lines, which are of major importance to business customers. Second, the PFJs ignore the effect of the mergers on Internet access. For the reasons discussed below, this Court should find that these mergers are not in the public interest and reject the PFJs.

II. Local Private Lines

As DOJ acknowledges, the mergers will lessen competition substantially for Local Private Lines (''LPLs''), more commonly know as ''special access'' lines. LPLs are dedicated point-to-point circuits, that enable secure high-speed voice and data transfer typically used by businesses and other enterprises. LPLs are especially critical for inter-office communications in the financial services industry, a key component of New York's economy.

A. The Mergers Will Eliminate Facilities-Based Competition in the ''Last Mile''

The most critical component of an LPL is the ''last mile,'' i.e., the last stretch of the connection from the carrier's network to the commercial building in which the customer is located. As incumbent local exchange carriers (''ILEC''), Verizon and SBC are often the only carriers with access to many buildings. CLECs must lease last-mile access from these incumbents if no other provider has gained access to the customer's location, and if right-of-way excavation or building entry costs inhibit the CLEC from constructing a new last mile connection of its own.

MCI and AT&T have made the most significant inroads of all competitors to Verizon and SBC in gaining access to commercial buildings, by going through the time-consuming and costly process of laying their own competitive access lines. MCI and AT&T also lease last mile facilities from the ILECs to reach customers in buildings not reached by any CLEC. In many buildings in major commercial centers nationwide, MCI and AT&T have become key competitive carriers, who offer customers seeking LPL service a choice other than the incumbent ILEC. Entry into the retail special access market by CLECs other than MCI and AT&T, via laying their own last-mile connections, is negligible. This retail competition by MCI and AT&T will be eliminated by the mergers.

B. The Mergers Will Eliminate Discounted ''Last Mile'' Wholesale Leasing

The ILECs lease bundled long-haul and last-mile LPL facilities to CLECs at significant large-volume discounts, which only AT&T and MCI can take advantage of because of their scale and ability to make longer-term purchase commitments. Thus, MCI and AT&T have also been essential players providing competition in the wholesale market for last mile access. MCI and AT&T have acted as price constrainors on the ILECs. MCI and AT&T have also resold the incumbent ILECs' last mile access to other, smaller CLECs at discounted rates. Without this secondary wholesale market offered by AT&T and MCI, smaller CLECs will no longer have access to these discounted prices.

C. The Remedy Proposed by the PFJ for the ''Last Mile'' Is Inadequate

In order to preserve some competition in the retail market for last mile access, the Verizon-MCI PFJ requires Verizon to divest a miniscule number of MCI-owned telecom facilities in individual buildings where MCI is the only telecom provider besides Verizon with last-mile connections in the building. Likewise, SBC would have to divest certain AT&T assets according to a similar scheme. These minimal divestitures will affect only a handful of buildings in major markets—a mere 17 in all of New York City, and only 38 buildings throughout all of New York State. Although Verizon and MCI are competitors in many hundreds of buildings in New York State, DOJ has used an unduly narrow permissive screen, which results in only 38 buildings receiving limited

[2] *See*, e.g., *http://www.oag.state.ny.us/telecommunications/telecommunications.html.*

[3] Although SBC has chosen to adopt AT&T's name following its merger closing, we refer to the two companies by their pre-merger identities to avoid ambiguity.

divestitures to address adverse competitive effects of the mergers.

DOJ is missing the forest for the trees. As a threshold matter, an individual building cannot plausibly be a geographic market for antitrust purposes. Indeed, here, the buildings are simply scattered commercial locations amidst MCI's existing network in New York City and statewide. They do not, themselves, form the critical mass needed to build a network. Nor are they network gateways or anchors that might have distinctive value. In consequence, any would-be competitor who acquired the divested MCI facilities serving these scattered buildings would have neither the scope nor scale necessary to stand in MCI's competitive shoes. It is, therefore, hard to see how this remedy could have any significant positive effect on competition beyond the footprint of the handful of individual buildings identified—assuming that the divestitures can be accomplished at all. Is the DOJ really prepared to inform the Court that the divestiture of access lines into these few buildings will have a competitive impact on pricing in general for LPL access in either New York City or the state generally? If not, the proposed remedy is mere window dressing.

Moreover, under the PFJ, DOJ retains the right, in its sole discretion, to exclude assets and rights.[4] Thus, even the 38 buildings in New York state could disappear from the Verizon-MCI PFJ divestiture list if DOJ concludes that any or all are not necessary to remedy the competitive harm. In other words, the remedy is written in disappearing ink. Either the divestitures are needed to remedy a likely antitrust violation or they are not. Surely the Court cannot be expected to decide that the public interest is served by a decree that has the potential for its divestiture remedies to vanish.

III. Internet Access Issues

The two proposed mergers raise antitrust concerns relating to Internet services, concerns that are not sufficiently addressed by the PFJs.

The PFJs do not address whether Verizon and SBC should be required to permanently provide unbundled, stand-alone DSL service to all customers, nor do the PFJs prohibit discrimination in favor of Verizon's or SBC's own services in the use of their Internet backbone. The risks associated with these trends are real and will have serious adverse effects on competition and the public if unchecked.

These two transactions will result in the two combined companies controlling over fifty percent of the nation's Internet backbone.[5] Recent post-merger statements by the Chief Executive Officers of Verizon and SBC foreshadow the companies' plans to manage access to their Internet backbone more restrictively, by, for example, charging a premium for priority access.[6]

A. DSL

1. Unbundled DSL

Both Verizon and SBC offer consumers access to the Internet through broadband connections known as Digital Subscriber Lines (''DSL''). DSL service is a dedicated high speed digital connection to the Internet provided over the traditional copper telephone lines. Verizon and SBC offer DSL service to their in-region small business and residential customers over these standard wireline connections.[7]

DSL is necessary for customers to use telephone wires to access high speed data services as well as voice over Internet protocol (''VOIP'') services. Typically, Verizon and SBC bundle DSL with their wireline voice services. This type of offering inhibits customers' ability to choose a competing provider for voice or data services.

For example, telephony using VOIP has the potential to be a major competitor to wireline telephone services. But stand-alone VOIP requires customers to secure broadband ''last mile'' access from another provider, typically via DSL. By only selling its DSL service bundled with its monopoly voice service, Verizon and SBC discourage their customers from choosing competitive VOIP providers. The Verizon customer cannot give up the Verizon voice service in favor of a competitive VOIP provider while keeping the customer's Verizon DSL broadband access. The negative effects on competition are apparent, and indeed, may snuff out VOIP's competitive potential before it even takes off.

2. Verizon Offers Stand-Alone DSL Only On a Limited Basis

In March 2005, the FCC ordered Verizon and other carriers to allow their existing customers who subscribe to the carriers' voice and DSL service to port their phone numbers to a new voice carrier.[8] In response, Verizon informed competing voice carriers that such customers should be advised that porting the number, and thus terminating their Verizon voice service, would cause their Verizon DSL service to be disconnected as the two services were inseparable.[9] Subsequently, during the FCC and DOJ review of the Verizon-MCI merger, Verizon publicly expressed a willingness to allow its existing customers in the former Bell Atlantic service territories to maintain their Verizon DSL broadband service in the event that they discontinued Verizon's telephone service.[10] However, even this option is not available to new Verizon customers or those outside the former Bell Atlantic service territories who seek to subscribe to stand-alone DSL at the outset.[11] For these customers, the only way to obtain VOIP with Verizon DSL would be to subscribe initially to Verizon's voice telephony and DSL, to pay the required connection charges, and only thereafter to jettison the unwanted voice service. This

[4] 70 FR at 74365 (''Lastly, with the approval of the United States, in its sole discretion, and at the purchaser's option, the Divestiture Assets may be modified to exclude assets and rights that are not necessary to meet the aims of this Final Judgement. This will allow for minor modifications of the Divestiture Assets to exclude assets that may not be necessary in order to remedy the competitive harm.'')

[5] Nicholas Economides, The Economics of the Internet Backbone, NYU Law and Economics Working Papers, Paper 4, p. 377 (2004).

[6] See, e.g., Arshad Mohammed, ''SBC Head Ignites Access Debate,'' Wash. Post., Nov. 4, 2005 at D01.

[7] While other variations of DSL, used primarily by medium and larger business customers, do not share a telephone line with voice traffic, these comments focus on the residential and small business DSL market.

[8] FCC Docket Number WC 03–251, BellSouth Emergency Request for Declaratory Ruling, FCC 05–78, Memorandum Opinion and Order and Notice of Inquiry, rel. March 25, 2005, 20 FCC Rcd 6830; 2005 FCC LEXIS 1817; 35 Comm. Reg. (P & F) 1063.

[9] Verizon claimed that customer identification issues prevented it from offering wireline and DSL services independent of each other. By contrast, Qwest Communications International Inc., the smallest regional Bell operating company (''RBOC''), has offered stand-alone DSL for quite some time. See Yuki Noguchi, Merger Critics Seek Telecom Regulation, Wash. Post, April 20, 2005, at E5. The inference is inescapable that Verizon is deliberately stalling so as to hinder competition from other VOIP providers.

[10] Matt Richtel, Some Verizon Customers to Get Stand-Alone D.S.L., N.Y. Times, April 19, 2005, at C7. In conjunction with the April 18, 2005 announcement, in a notice to CLECs, Verizon explained that CLECs no longer had to alert customers that porting would result in disconnecting their DSL service. Instead, Verzion said that CLECs should alert customers that DSL service might be disconnected, and that the customer should contact Verizon to determine how to handle the service. There still seems to be some ambiguity whether every existing Verizon customer seeking stand-alone DSL will actually be able to do so. Moreover, Verizon has not disclosed whether its stand-alone DSL will be priced at a premium or at a price comparable to that of the DSL component of the bundled product.

[11] E.g., those customers formerly served by GTE before its acquisition by Bell Atlantic would not have the option of stand-alone DSL.

constitutes a significant anticompetitive hurdle.

While retarding competitive entry by VOIP providers in this manner, Verizon has committed billions of dollars to expand its fiber-to-the-premises (FTTP) network. As this expansion is completed, it will allow Verizon to replace its DSL service with an array of high speed products to better compete with broadband and video services offered by cable providers. Thus far, however FTTP is available only in limited areas.[12] While the roll-out of FTTP progresses Verizon has little incentive to offer stand-alone DSL—particularly when refraining from doing so hinders VOIP providers from competing against Verizon's monopoly voice product.

Indeed, Verizon's own Annual Report indicates that offering DSL and other services on an unbundled basis is not likely to be a high priority for Verizon at all, as the bundles themselves give Verizon a competitive advantage over other service providers. Verizon's 2004 Annual Report highlights the company's ''continuing initiatives to more effectively package and add more value to our products and services. Innovative product bundles include local wireline services, long distance, wireless and DSL for consumer and business retail customers. * * * These efforts will also help counter the effects of competition and technology substitution that have resulted in access line losses in recent years.'' [13]

3. The FCC Required That Verizon and SBC Offer Stand-Alone DSL

The significance of the stand-alone DSL issue is demonstrated by the merger conditions ordered by the FCC and various state regulators. As part of the approval of the Verizon/MCI and SBC/AT&T transactions, the FCC required that the parties make stand-alone DSL available to customers in region without requiring the purchase of wireline telephone services for a period of two years.[14] While this condition recognized the competitive value of stand-alone DSL, the two year time frame moots its effect. The scheduled expiration of the requirements will not only cripple VOIP as a competitive voice telephone service; the mere prospect of such an event is likely to inhibit investment and growth mass market VOIP providers.

The public interest should not depend on whether Verizon and SBC decide to offer stand-alone DSL of their own volition after the two-year requirement expires. Recognizing the advantage that Verizon and SBC derive from offering their DSL service only as a bundled product, DOJ should have considered whether Verizon and SBC are likely to eliminate DSL on a stand-alone basis as soon as the FCC's merger conditions expire. In approving the transactions, DOJ should have required customer access to unbundled services for longer than two years as a condition of its approval.

B. The Internet Backbone

1. The Mergers Will Increase Internet Backbone Concentration

The combinations of Verizon with MCI and SBC with AT&T will dramatically increase concentration of Internet backbone facilities, and will enable Verizon and SBC to exert market power over competing Internet service providers (''ISPs'') and content providers, to the detriment of consumers.[15] In recent statements, executives of both Verizon and SBC have stated that they intend to abandon the established practice of equal access for all Internet traffic by favoring their own services and charging premiums to competing ISPs for providing comparable service.[16] All other traffic would be subjected to lower grade service. This prospect could have significant anticompetitive impacts on a number of Internet-based services, such as those that rely upon video streaming, and would alter the very nature of the Internet.

The Internet backbone comprises high speed hubs, to which customer data packets, including electronic mail and voice services, are sent by ISPs, and high speed circuits that connect the hubs to move data from one location to another. In most instances, the data is broken up into smaller packets to speed delivery. Because the data packets usually flow over multiple providers' backbones before reaching their final destinations, different providers' backbones must interconnect to deliver customer traffic.[17] Thus, the Internet backbone provides data transport and routing services, moving the data to the appropriate destinations with a minimum of loss and delay.

The primary Internet infrastructure in the U.S. has approximately ten major backbones—often referred to as ''Tier 1 providers''—plus independent ISPs that use this backbone to provide services to customers.[18] One source identifies MCI and AT&T as two of the world's top five Internet backbones.[19] According to In Stat-MDR, a market research firm, ''[a]t the end of 2000, 10 backbone providers generated 92 percent of all wholesale ISP revenues'' in the U.S.[20] In Stat-MDR found that the three top providers in 2002 were MCI with 44% of the Internet backbone, Genuity with 12.5% and Sprint with 9.4%.[21] Based on those numbers, these three providers alone comprise two-thirds of the Internet backbone market and yield an Herfindahl-Hirshfeld Index of 2180 without including the remaining smaller

[12] News Release, Verizon Communications Inc., Verizon Brings Blazing-Fast Computer Connections to 5 Long Island Communities, (April 11, 2005) available at *http://newscenter.verizon.com/proactive/newsroom/release.vtml?id=90318* (''Verizon customers in Massapequa, Wantagh, Franklin Square, Port Washington and Oyster Bay now can experience breathtaking high-speed Internet access as the company begins to offer its Verizon FiOS℠ (FYE'-ose) Internet Service to homes here.'').

[13] Verizon Communications Inc., 2004 Quarterly Report (for the period ending September 30, 2004), pp. 20–21 (2005). See also Verizon Communications Inc., 2003 Annual Report, Exhibit 13 (2004) (noting that decreases in certain revenue streams were ''partially offset by increased demand for our DSL services''). Last year, Verizon noted that ''[a]s of year-end 2003, approximately 48% of Verizon's residential customers have purchased local services in combination with either Verizon long distance or Verizon DSL, or both.'' Verizon Communications Inc., 2003 Annual Report, p. 6 (2004). By September 30, 2004, that number had increased to 53%. Verizon, 2004 Quarterly Report (for the period ending September 30, 2004), p. 26 (2005).

[14] FCC Docket No. 05–65, In the Matter of SBC Communications and AT&T Corp. Applications for Approval of Transfer and Control, FCC 05–185 Memorandum Opinion and Order, adopted October 31, 2005, rel. Nov. 17, 2005, 2005 FCC LEXIS 6385; 37 Comm. Reg. (P & F) 321; FCC WC Docket No. 05–75, In the Matter of Verizon Communications Inc. and MCI, Inc. Applications for Approval of Transfer of Control, FCC 05–184, Memorandum Opinion and Order, adopted Oct. 31, 2005, rel. Nov. 17, 2005 FCC LEXIS 6386; 37 Comm. Reg. (P & F) 416. The New York Public Service Commission also ordered Verizon to provide unbundled DSL, also for a period of two years. New York State Public Service Commission, Order Asserting Jurisdiction and Approving Merger Subject to Conditions, Case 05–C–0237, Joint Petition (issued November 22, 2005).

[15] The vast majority of Internet users in the United States access the Internet infrastructure through ISPs. While AOL is by far the largest ISP, many smaller ISPs exist, some of whom have customers only in limited regions. Nicholas Economides, supra, p. 375.

[16] See e.g., Dionne Searcey and Amy Schatz, ''Phone Companies Set Off Battle Over Internet Fees,'' Wall St. Journal, Jan. 6, 2006 at A1.

[17] Nicholas Economides, supra, p. 375. For a more detailed understanding of the Internet backbone see Michael Kende, The Digital Handshake: Connecting Internet Backbones, FCC Office of Plans and Policy Working Paper No. 32 (September 2000) and Nicholas Economides, supra.

[18] Data about the Internet backbone are often incomplete or outdated or do not specifically identify whether the data are based on usage, revenue or some other measure. The merging parties were unable and/or unwilling to provide current data during the review of the transactions.

[19] Internet Backbone Lookup Page, *http://www.cybercon.com/backbone.html*. The others are Sprint, Qwest and Level 3.

[20] ISP-Planet Staff, ISP Backbone Market Forecast: Flat Through 2002 at *http://isp-planet.com/research/2002/backbone_020123.html*.

[21] *Id*.

providers. This would be considered a highly concentrated market.

Tier 1 Internet backbone providers achieve interconnection of their backbones through what is known as ''peering.'' Through peering, Tier 1 providers agree to afford each other the ability to freely move data across networks without fees in mutually beneficial arrangements. Smaller backbone providers, on the other hand, are frequently considered free riders, as they generate too little traffic to be peering partners. Because Tier 1 providers generally do not consider no-fee peering with small providers to be sufficiently beneficial, smaller providers often enter into fee-based agreements—called ''transit'' arrangements—with Tier 1 providers.

These fee-based arrangements for interconnection are not necessarily problematic in a competitive market. However, if only a few providers control backbone access, the resulting opportunity for these few to hinder the operations of smaller backbone competitors by refusing to interconnect with them, or by imposing onerous fees or conditions on interconnecting, has significant anticompetitive and public interest implications. Those Tier 1 backbone providers would have both the ability and incentive to, for example, charge significantly higher fees, prioritize their own data packets, block certain ISP transmissions, or end their cooperative relationships with smaller backbones entirely.[22]

Consequently, regulatory action has been necessary to preserve competition when the Internet backbone was threatened by earlier corporate combinations and mergers. In 1998, when WorldCom, the owner of Internet backbone assets, proposed to acquire MCI, then the owner of UUNet backbone assets, the FCC required WorldCom to divest its backbone assets to Cable & Wireless.[23] Similarly, when the FCC considered the merger application of Bell Atlantic and GTE (which resulted in the formation of Verizon), the FCC weighed the public interest impact of the consolidation of companies' Internet backbone holdings. Indeed, the FCC concluded that the merging parties had ''not demonstrated any merger-specific benefits to the market for Internet backbone services.'' [24]Accordingly, approval of the GTE/Bell Atlantic merger was conditioned, in part, on GTE's divestiture of its Internet backbone.[25]

Taken together, the Verizon-MCI and SBC–AT&T mergers would significantly increase concentration in the Internet backbone market. Neither the FCC order nor the PFJ gave serious consideration to this critical issue, and to the effect of these mergers on the Internet backbone.

2. Verizon and MCI's Internet Backbones [26]

MCI, by its own acknowledgement, owns ''one of the most extensive Internet protocol backbones.'' [27] Recently, MCI reported that its backbone network ''has been recognized for the fourth consecutive year * * * as the world's most connected Internet backbone playing a critical role in the movement of Internet traffic. Our expansive IP footprint, coupled with our direct interconnections, enables our customers to reach more destinations directly through our global Internet backbone than any other communications provider.'' [28]

MCI's extensive backbone thus represents an attractive, strategic asset. According to MCI's 2003 Annual Report, MCI occupies:

> a strategically important position within the communications market . . . availability due to the extremely rapid growth of Internet usage resulting from the increasing availability of high speed broadband access, the decreasing cost of all types of Internet access, the expanding volume of informative and entertaining content, the continued improvement in e-mail and instant messaging, and the ever increasing number of personal computers, and other devices for accessing the Internet. Corporations and government entities have responded by developing additional applications to run over the Internet that allow communications and e-commerce transactions with customers, communications with employees and the transfer of data among offices and operating units.[29]

Although public information regarding Verizon's current Internet backbone ownership is incomplete, there can be no doubt that the opportunity to amass a dominant Internet backbone position is a driving force behind the company's decision to acquire MCI. As the companies stated in their Application to the FCC:

> The Verizon/MCI combination of product offerings will provide a stronger, and geographically broader, converged solution for large enterprises. Verizon currently has strong IP-based offerings, but they have limited reach within its area footprint and Verizon is not a major provider of IP-based services. MCI's core strength is its global Internet backbone, which provides global IP connectivity today, and will be able to provide next-generation VoIP and other IP-based services worldwide tomorrow.[30]

But the consolidation of Verizon's assets with MCI's Internet backbone also holds significant risks of adverse consequences to competition and innovation. The issues related to consolidation of the Internet backbone were not raised by the parties in their Joint Petition, which fails to identify: (1) Whether Verizon already controls a share of the Internet backbone, (2) the share of the Internet backbone held by MCI, and (3) the combined share of the Verizon/MCI assets. These risks were not addressed by DOJ in the Verizon-MCI PFJ, nor by the FCC in its approvals of the transactions. These omissions are striking.

The Court should reject the Verizon-MCI merger unless and until Verizon provides the information needed to make an informed decision regarding the extent to which backbone concentration will increase as a result of the proposed merger with MCI. Based on that information, together with further public comment evaluating it, the appropriateness of divestiture of backbone assets should be assessed.

3. The Threat to Competition Is Concrete

The consolidation of the Internet backbone as a result of the mergers is not an issue in the abstract. As the combined Verizon/MCI and SBC/AT&T move to offer more bundled product packages over their backbones—such as offering VOIP and video services—the increased need for bandwidth may strain their existing systems, encouraging Verizon and/or SBC to give priority to their own products. This prioritization would disadvantage consumers who use non-Verizon/SBC Internet service providers to access information and services that must

[22] Kende, supra, pp. 18–23.

[23] CC Docket No. 97–211—Application of WorldCom, Inc. and MCI Communications Corporation for Transfer of Control of MCI Communications Corporation to WorldCom, Inc., Memorandum Opinion and Order, FCC 98–225 (rel. Sept. 14, 1998).

[24] CC Docket No. 98–184—In re Application of GTE Corporation, Transferor, and Bell Atlantic Corporation, Transferee For Consent to Transfer Control of Domestic and International Sections 214 and 310 Authorizations and Applications to Transfer Control of a Submarine Cable Landing License, Memorandum Opinion and Order, released June 16, 2000, at ¶ 215.

[25] CC Docket 98–184, supra, at ¶ 215 (footnote omitted) (''Although we agree with the Applicants that the Internet backbone market is highly concentrated, we nonetheless conclude that the Bell Atlantic and GTE have presented insufficient evidence regarding how their proposed merger would alleviate such concentration and benefit consumers of long-haul data services.'').

[26] We focus on the Verizon and MCI Internet backbone as Verizon is the major ILEC in New York State.

[27] MCI, Inc., 2003 Annual Report 2 (2004).

[28] MCI, Inc., 2004 Quarterly Report (for the period ending September 30, 2004) 33 (2004).

[29] MCI, Inc., 2003 Annual Report 15 (2004).

[30] Application, p. 17 (citations omitted).

travel across the Verizon and SBC backbones.

The proposed combinations also would adversely impact other Internet backbone providers who lack the capacity to offer the same panoply of services. The more extensive offerings would drive traffic to Verizon and SBC and, moreover, increase the companies' market share.

Vital public policy, therefore, requires that Verizon's acquisition of MCI's Internet backbone, and SBC's acquisition of AT&T backbone, when combined with their current Internet backbone holdings, not diminish either consumers' or competitors' equal and unfettered access to the Internet.

4. The Mergers Risk Creating a Discriminatory Internet Class Structure

There is a risk that, post-merger, Verizon and SBC will have Internet backbones that carry their own products in first class, while competitors ride in coach, pay more or never get to ride at all. A combined Verizon/MCI entity would be well positioned to create an Internet infrastructure that restricts access to the Internet backbone for countless businesses, institutions and individuals.[31] At stake is nothing less than the ability of Internet access providers, such as Verizon and SBC, to limit or diminish consumers' access to Google, Vonage or any other content or service provider that does not pay its fees. The resulting Internet ''class structure'' would not only affect the ability of smaller competitors to participate in the marketplace of ideas and services, it risks drastically altering the character of the Internet. This would not only reverse the cultural and economic revolution that the Internet has inspired, but also would change the nature of the Internet, in which participants compete based on the quality of their content or services, not on their ability to pay fees to the backbone providers.

As demonstrated by recent Verizon and SBC statements, this danger is a likely near-term reality. Both SBC and Bell South have publicly advocated a two tiered Internet. SBC's public statements on the topic became more frequent after its acquisition of AT&T was approved.[32] SBC Chairman Edward E. Whitacre, Jr. is one of the most vocal proponents of a tiered system, stating that ''Why should they be able to use my pipes? The Internet can't be free in that sense, because we and the cable companies have made an investment and for a Google or Yahoo or Vonage or anybody to expect to use these pipes free is nuts.'' [33] As an Amazon.com representative said after hearing Mr. Whitacre's comments, ''What Mr. Whitacre's interview revealed was, I think he said two very distinct things. One is that the service providers have market power. * * * and part two was, we intend to use it.'' [34] Though Verizon waited to clear all regulatory hurdles to the merger with MCI before addressing the issue, its position is in line with that of SBC. Verizon Chairman Ivan Seidenberg recently stated that, ''We have to make sure they don't sit on our network and chew our capacity.'' [35]

IV. The PFJs Undo Thirty Years of Federal Telecommunication Competition Policy

At least since DOJ commenced antitrust enforcement action against the national telephone monopoly, AT&T, over thirty years ago, resulting in the breakup of ''Ma Bell'' in 1984, the Federal government has pursued a policy to encourage competition in all sectors of the rapidly changing telecommunications industry. The PFJs represent a significant step backwards, and will likely lead to a more monopolistic industry in the future.

MCI and AT&T have been the leading competitors to the regional Bell companies, Verizon and SBC, in the twenty years since the AT&T monopoly was broken up. However, as a result of these mergers, Verizon and SBC will become vertically integrated, dominant providers of local, long distance, wireless and Internet services to business and residential customers in large regions of the country. If these mergers proceed without stronger remedial protections, Verizon and SBC will be free to recreate within their regions the monopoly maintained by AT&T prior to 1984.[36] With the elimination of Verizon's and SBC's major competitors (MCI and AT&T), prices can be expected to rise, and telephone users, from large business customers to small businesses and residential customers, are likely to find fewer service choices. DOJ should have analyzed the national and regional impact of both mergers together and, at least, required divestiture substantial enough to create a realistic opportunity for industry participants to step into MCI's and AT&T's competitive shoes.

Additionally, Verizon and SBC will each have a powerful incentive to refrain from competing in each other's territory and to focus on their respective regions. The two telecommunications mammoths will have more to gain by selling each other limited LPL access, than by engaging in rigorous competition by installing their own last-mile loops in each other's region. Even without coordination, there is a substantial risk that each will follow its own economic interests by not competing, as long as the other does the same. This kind of tacit collusion or mutual forebearance is highly anticompetitive, whether or not the parties actually agree to form a cartel. The PFJs do nothing to counter this substantial threat.

V. Conclusion

The Court should not give DOJ ''a pass'' in its review of these important mergers. The long term implications are too important for too many people and businesses in New York and, indeed, throughout the country. Nothing in the PFJs is likely to preserve effective competition at any level in the affected markets, or to prevent the harm to the public that will follow the reduction in competition. The proposed remedies are, at best, cosmetic. Based on the current state of affairs, the Court should reject the PFJs as insufficient and contrary to the public interest.

Dated: New York, New York, February 13, 2006.

Respectfully Submitted,

Eliot Spitzer,

Attorney General of the State of New York.

By:

Jay L. Hines,

Chief, Antitrust Bureau

Mary Ellen Burns,

Special Counsel, Public Advocacy Division.

Jay L. Himes,

[31] By way of example, there exists today a process known as ''tagging,'' which allows a provider to use rule-based and policy-based filtering to limit the flow of data packets. If packets are ''tagged,'' the network recognizes the class of service and priority assigned it for real-time delivery to ensure a high quality of service. Using tagging, Verizon could assign a higher transit priority—first class status—to data packets originating on its own system, while relating a lower priority—coach status—to the data packets from outside traffic that needs to access Verizon's Internet backbone.

[32] Declan McCullagh, ''Playing favorites on the Net'', CNET News.com (Dec. 21, 2005) *http://news.com.com/Playing+favorites+on+the+Net/2100-1028_3–6003281.html.*

[33] Arshad Mohammed, ''SBC Head Ignites Access Debate,'' Wash. Post., Nov. 4, 2005 at D01.

[34] McCullagh, supra note 31.

[35] Dionne Searcey and Amy Schatz, ''Phone Compnies Set Off Battle Over Internet Fees,'' Wall St. Journal, Jan. 6, 2006 at A1.

[36] Despite Verizon's and SBC's assertions that new technologies such as VOIP and cable telephony, as well as wireless providers pose significant competitive threats to the ILECs, it is premature to rely on such alternatives to substitute for the competition that MCI and AT&T have offered. These competitors do not play a significant role in business markets, having inadequate market share, reliability or security to handle sensitive data traffic. Thus, they cannot be relied upon to restrain Verizon or SBC from exercising market power after the merger.

Chief, Antitrust Bureau.

Susanna Zwerling,

Chief Telecommunications & Energy Bureau.

Peter D. Bernstein,

Keith H. Gordon

Jeremy R. Kasha.

Assistant Attorneys General of Counsel.

120 Broadway, New York, NY 10271, Tel No.: (212) 416–8262, Fax No.: (212) 416–6015.

[FR Doc. 06–3090 Filed 4–4–06; 8:45 am]

BILLING CODE 4410–11–M