Federal Register

Wednesday,
June 28, 2006

Part II

Department of Transportation

Federal Railroad Administration

49 CFR Parts 229 and 238
Locomotive Crashworthiness; Final Rule

DEPARTMENT OF TRANSPORTATION

Federal Railroad Administration

49 CFR Parts 229 and 238

[Docket No. FRA–2004–17645, Notice No. 3]

RIN 2130–AB23

Locomotive Crashworthiness

AGENCY: Federal Railroad Administration (FRA), Department of Transportation (DOT).

ACTION: Final rule.

SUMMARY: FRA is issuing comprehensive, minimum standards for locomotive crashworthiness. These crashworthiness standards are intended to help protect locomotive cab occupants in the event of a locomotive collision. Examples of locomotive collision scenarios considered in this rulemaking include collisions with another locomotive, the rear of another train, a piece of on-track equipment, a shifted load on a freight car on an adjacent parallel track, and a highway vehicle at a rail-highway grade crossing. Locomotive crashworthiness must be demonstrated by complying with either the final rule's new performance standards or an FRA-approved design standard.

DATES: *Effective Date:* This final rule is effective August 28, 2006. The incorporation by reference of certain publications listed in the rule is approved by the Director of the Federal Register as of August 28, 2006.

ADDRESSES: For access to the docket to read background documents or comments received, go to *http://dms.dot.gov* at any time or to Room PL–401 on the plaza level of the Nassif Building, 400 Seventh Street, SW., Washington, DC, between 9 a.m. and 5 p.m., Monday through Friday, except Federal Holidays.

FOR FURTHER INFORMATION CONTACT: John Punwani, Office of Research and Development, Federal Railroad Administration, 1120 Vermont Avenue, NW., Mail Stop 20, Washington, DC 20590 (telephone: 202–493–6369); Charles L. Bielitz, Mechanical Engineer, Office of Safety Assurance and Compliance, Federal Railroad Administration, 1120 Vermont Avenue, NW., Mail Stop 25, Washington, DC 20590 (telephone: 202–493–6314); or Melissa Porter, Trial Attorney, Office of Chief Counsel, Federal Railroad Administration, 1120 Vermont Avenue, NW., Mail Stop 10, Washington, DC 20590 (telephone: 202–493–6034).

SUPPLEMENTARY INFORMATION:

I. Statutory and Regulatory Background

A. FRA Regulatory Authority

FRA has broad statutory authority to regulate railroad safety. The Locomotive Inspection Act (LIA) (formerly 45 U.S.C. 22–34, now 49 U.S.C. 20701–20703) was enacted in 1911. It prohibits the use of unsafe locomotives and authorizes FRA (by delegation from the Secretary of Transportation) to issue standards for locomotive maintenance and testing. In order to further FRA's ability to respond effectively to contemporary safety problems and hazards as they arise in the railroad industry, Congress enacted the Federal Railroad Safety Act of 1970 (Safety Act) (formerly 45 U.S.C. 421, 431 *et seq.*, now found primarily in chapter 201 of Title 49). The Safety Act grants the Secretary of Transportation rulemaking authority over all areas of railroad safety (49 U.S.C. 20103(a)) and authority to investigate and penalize violations of any rail safety law. This authority was subsequently delegated to the FRA Administrator (49 CFR 1.49). (Until July 5, 1994, the Federal railroad safety statutes existed as separate acts found primarily in Title 45 of the United States Code. On that date, all of the acts were repealed, and their provisions were recodified into Title 49.)

> The term ''railroad'' is defined in the Safety Act to include all forms of non-highway ground transportation that runs on rails or electromagnetic guideways, * * * other than rapid transit operations within an urban area that are not connected to the general railroad system of transportation.

This definition makes clear that FRA has jurisdiction over (1) rapid transit operations within an urban area that are connected to the general railroad system of transportation, and (2) all freight, intercity, passenger, and commuter rail passenger operations regardless of their connection to the general railroad system of transportation or their status as a common carrier engaged in interstate commerce. FRA has issued a policy statement describing how it determines whether particular rail passenger operations are subject to FRA's jurisdiction (65 FR 42529 (July 2, 2000)); the policy statement can be found in Appendix A to parts 209 and 211 of Title 49 of the Code of Federal Regulations (hereinafter, all references to CFR parts and sections will refer to parts and sections in Title 49 of the Code of Federal Regulations).

Pursuant to its statutory authority, FRA promulgates and enforces a comprehensive regulatory program to address railroad track; signal systems; railroad communications; rolling stock; rear-end marking devices; safety glazing; railroad accident/incident reporting; locational requirements for dispatching of U.S. rail operations; safety integration plans governing railroad consolidations; merger and acquisitions of control; operating practices; passenger train emergency preparedness; alcohol and drug testing; locomotive engineer certification; and workplace safety.

In part 229, FRA established minimum federal safety standards for locomotives. These regulations prescribe inspection and testing requirements for locomotive components and systems, minimum locomotive cab safety requirements, and even basic crashworthiness design requirements for electric multiple-unit type locomotives. On May 12, 1999, FRA issued regulations addressing the safety of passenger rail equipment, including passenger-occupied locomotives (*i.e.*, cab control cars, powered multiple-unit passenger cars). These are found in part 238. However, FRA's existing locomotive safety standards do not address the crashworthiness of conventional locomotives, which comprise the majority of locomotives in use today.

B. Rail Safety Enforcement and Review Act

In 1992, Congress passed The Rail Safety Enforcement and Review Act (RSERA). Pub. L. 102–365, September 3, 1992. In response to concerns raised by railroad employee organizations, members of Congress, and recommendations of the National Transportation Safety Board (NTSB) concerning locomotive crew safety, Congress included mandates concerning locomotive crashworthiness and cab working conditions in the legislation. Section 10 of RSERA, entitled ''Locomotive Crashworthiness and Working Conditions,'' required FRA ''to complete a rulemaking proceeding to consider prescribing regulations to improve the safety and working conditions of locomotive cabs.'' In order to determine whether crashworthiness regulations would be necessary, Congress tasked FRA with assessing the adequacy of Locomotive Crashworthiness Requirements Standard S–580, or any successor standard thereto, adopted by the Association of American Railroads in 1989, in improving the safety of locomotive cabs. Furthermore, Congress specifically mandated that the Secretary, in support of the rulemaking proceeding, consider the costs and benefits associated with equipping locomotives with each of a number of specified design features.

FRA agrees that locomotive crashworthiness protection is necessary because train collisions and derailments can result in crew fatalities and injuries. In the period from 1995 to 1997, 26 locomotive cab occupants were killed and 289 were injured in freight and passenger train accidents in the United States, a yearly average of 105 casualties.[1]

Adopted in 1989, Association of American Railroads (AAR) Specification S–580 (''S–580'') has served as the industry standard for crashworthiness design specifications of new road freight locomotives. At the time of its development, S–580 provided basic enhancements to the crashworthiness of road locomotives. Many of the units built to this specification are of wide-nose cab design, often referred to as the North American cab design. It is generally held throughout the industry that S–580 represented a significant step on the part of the railroad industry to improve the crashworthiness of locomotives.

II. FRA's Response to Section 10 of RSERA

In response to the mandate of Section 10 of RSERA, FRA conducted the necessary research and analysis. FRA undertook steps to determine the health and safety effects of locomotive cab working conditions and evaluated the effectiveness of S–580, along with the benefits and costs of RSERA's specified locomotive crashworthiness features (*i.e.*, braced collision posts, rollover protection devices, deflection plates, shatterproof windows, readily accessible crash refuges, uniform sill heights, anticlimbers, or other equipment designed to prevent overrides resulting from head-on locomotive collisions, equipment to deter post-collision entry of flammable liquids into locomotive cabs, any other device intended to provide crash protection for occupants of locomotive cabs). In an effort to fully address the broad range of issues presented in the RSERA, FRA (1) conducted an industry-wide public meeting to gather information regarding the areas of concern identified in the RSERA, (2) established a locomotive collision database based on detailed accident information gathered from actual collisions, (3) established a research contract to develop and verify a computer model capable of predicting how each of the crashworthiness features in S–580 and in the RSERA affect the collision dynamics and probability of crew injury, and (4) conducted a detailed survey of locomotive crews' cab working conditions and environment. FRA detailed the results of these actions in ''Locomotive Crashworthiness and Cab Working Conditions Report to Congress,'' dated September 18, 1996. A copy of this report has been placed in the docket of this rulemaking as Document No. FRA–2004–17645–9. Actions taken to gather information for that report are described below.

First, meetings with all segments of the railroad industry formed an essential part of FRA's plan to meet the requirements of the RSERA. FRA held an industry-wide public meeting on June 23, 1993, to gather information from the industry on each of the areas of concern identified in Section 10 of the RSERA and to inform the industry of FRA's approach. This meeting was well attended by all segments of the rail industry, including rail labor, freight railroads, locomotive builders, the National Railroad Passenger Corporation (Amtrak), and commuter railroads.

At this initial meeting, some of the railroads urged that improvements in crash avoidance technology should be pursued in lieu of improved crashworthiness features. FRA is currently pursuing crash avoidance technology and on March 7, 2005, published a separate rule (part 236, subpart H) on performance standards for the use and development of processor-based signal and train control systems. See 70 FR 11052. The issue of collision avoidance is more fully discussed below in section IV of the preamble.

Several participants in the public meeting expressed an opinion that a series of smaller, informal meetings with the separate segments of the rail industry would provide more detailed information regarding locomotive crashworthiness. As a result, FRA held a number of such meetings which included the following organizations:

American Public Transportation Association (APTA);
American Short Line and Regional Railroad Association (ASLRRA);
Amtrak;
AAR;
Brotherhood of Locomotive Engineers (now Brotherhood of Locomotive Engineers and Trainmen (BLET);
Burlington Northern (now Burlington Northern Santa Fe Railway) (BNSF);
DuPont (glazing);
General Electric Transportation Systems (GE);
General Motors-Electro-Motive Division (GM/EMD);
Morrison Knudsen (MK); NTSB;
Sierracin (glazing); and
United Transportation Union (UTU).

These meetings generated considerable discussion about the adequacy of the AAR's Locomotive Crashworthiness Standard S–580 (1989), the requirement to conduct research and analysis, including computer modeling and full-scale crash testing of the safety of locomotives, and the costs and benefits associated with RSERA's specified locomotive crashworthiness features. During the meetings, FRA requested specific cost or test data to support the positions taken by the various organizations. Some supply industry organizations were forthcoming with this data, while other organizations were apparently unable or unwilling to respond.

Second, FRA proceeded based on the understanding that earlier locomotive collision accident reports did not contain the data necessary to support crash modeling. Thus, in 1992, FRA instructed field inspectors to investigate all accidents involving either a collision of two trains or a collision of one train with an object weighing ten tons or more, regardless of monetary damage thresholds and locomotive design. This accident data provided information which FRA used to determine the possible benefits of a crashworthiness regulation.

Third, with the support of the Volpe National Transportation Systems Center (''Volpe Center''), FRA contracted with Arthur D. Little, Inc. (ADL) to predict the benefit, if any, of each of the locomotive crashworthiness features listed in Section 10 of the RSERA. Using the collision data collected by FRA, ADL performed a series of analyses using computer models to evaluate the effectiveness of specific crashworthiness design features.[2]

Lastly, FRA's approach to the research and analysis tasks focused on the cost and benefits of design changes to conventional locomotives operating at speeds of less than 80 mph. The work done to meet the requirements of the RSERA was not intended to address safety concerns unique to high speed rail transportation. FRA has addressed high speed rail safety concerns,

[1] Regulatory Impact Analysis, p. iii of Appendix B of the Analysis. These statistics were taken from the data set of injuries/fatalities that, because of their circumstances, could have been prevented by the crashworthiness standards contained in this rule. Thus, this set does not include the total number of all locomotive cab occupant fatalities/injuries that occurred during this time period.

[2] Mayville, R. A., Stringfellow, R. G., Rancatore, R. J., Hosmer, T. P., 1995, ''Locomotive Crashworthiness Research, Volumes 1 through 5,'' DOT/FRA/ORD–95/8.1–8.5. A copy of each cited report has been placed in the docket of this rulemaking as Document No. FRA 2004–17645–13.

including crashworthiness design, in part 238.

FRA's Report to Congress contained an implementation strategy to address each of the issues raised by the RSERA.[3] FRA determined that S–580, which provided for improvements in collision posts, anti-climbing arrangements, and the short hood structure, represented a significant step on the part of the railroad industry to improve locomotive crashworthiness. The research and analysis conducted in response to the RSERA showed that S–580 could be further improved to reduce casualties without significantly impacting locomotive design. FRA also found that (1) modified front-end structural designs incorporating stronger collision posts, (2) full-height corner posts with increased strength, and (3) utilization of roof longitudinal strength to support structural members from crushing may provide opportunities for additional protection for locomotive cab occupants. FRA even evaluated the potential to create a designated crash refuge within the space that these measures would help to protect. Furthermore, based on accident/incident experience and recent advances in fuel tank design being undertaken by the industry, FRA concluded that fuel tank design could be significantly improved to minimize the risk and severity of future fuel spills. Finally, FRA identified locomotive cab emergency lighting and more reliable means of rapid egress during derailments and collisions as additional subject areas which appeared to warrant further exploration.

While the study findings clearly indicate that several crashworthiness features warranted further exploration, the findings also indicated that several features, including rollover protection, uniform sill heights, and deflection plates did not warrant further action. Rollover protection costs would be substantial, and no material need for such protection was demonstrated by the accident data. Design limitations of multi-use freight locomotives all but preclude practical design possibilities for deflection plates, and FRA found that a successful deflection device would cause collateral safety problems. Uniform sill heights were found not to significantly reduce life-threatening collision damage, would have a high cost, and any benefit would accrue only after an extended period over which older standard locomotives would be phased out of service. The perceived benefits of uniform sill height might be more reliably achieved by improved anti-climbing arrangements, and the report proposed that development and evaluation of a design concept be explored.

Many of the proposed measures were practical for application only to newly constructed locomotives. Further, additional information and research were required to determine the cost-effective basis of these concepts, and to assure the acceptance of these measures by locomotive crews. In order for protective features to be effective, crew members must have confidence that they will function as intended. Crew members who lack confidence in the safety measures employed may be inclined to jump from a locomotive prior to a collision, resulting in a high probability of serious injury or death.

FRA determined that it would use its Railroad Safety Advisory Committee to further develop these safety issues thereby tapping the knowledge and energies of a wide range of interested parties.

III. Railroad Safety Advisory Committee (RSAC) Recommendations

In March 1996, FRA established the RSAC, which provides a forum for consensual rulemaking and program development. The Committee includes representation from all of the agency's major customer groups, including railroads, labor organizations, suppliers and manufacturers, and other interested parties. A list of member groups follows:

AAR;
American Association of Private Railroad Car Owners (AARPCO);
American Association of State Highway & Transportation Officials (AASHTO);
American Train Dispatchers Department/BLE (ATDD/BLE) (now American Train Dispatcher Association);
Amtrak;
APTA;
ASLRRA;
Association of Railway Museums (ARM);
Association of State Rail Safety Managers (ASRSM);
BLET;
Brotherhood of Maintenance of Way Employes (now Brotherhood of Maintenance of Way Employes Division (BMWED);
Brotherhood of Railroad Signalmen (BRS);
Federal Transit Administration (FTA) (associate member);
High Speed Ground Transportation Association;
Hotel Employees & Restaurant Employees International Union;
International Association of Machinists and Aerospace Workers;
International Brotherhood of Boilermakers and Blacksmiths;
International Brotherhood of Electrical Workers (IBEW);
Labor Council for Latin American Advancement (LCLAA) (associate member);
League of Railway Industry Women (associate member);
National Association of Railroad Passengers (NARP);
National Association of Railway Business Women (associate member);
National Conference of Firemen & Oilers;
National Railroad Construction and Maintenance Association;
NTSB (associate member);
Railway Supply Institute (RSI);
Safe Travel America;
Secretaria de Communicaciones y Transporte (associate member);
Sheet Metal Workers International Association (SMW);
Tourist Railway Association Inc.;
Transport Canada (associate member);
Transportation Communications International Union/BRC (TCIU/BRC);
Transport Workers Union of America (TWUA); and
UTU.

When appropriate, FRA assigns a task to RSAC, and after consideration and debate, RSAC may accept or reject the task. If the task is accepted, RSAC establishes a working group that possesses the appropriate expertise and representation of interests to develop recommendations to FRA for action on the task. The working group develops the recommendations by consensus. The working group may establish one or more task forces to develop the facts and options on a particular aspect of a given task. The task force reports to the working group. If a working group comes to unanimous consensus on recommendations for action, the working group presents the package to the RSAC for a vote. If a simple majority of the RSAC accepts the proposal, the RSAC formally recommends the proposal to FRA.

FRA then determines what action to take on the recommendation. Because FRA staff has played an active role at the working group level in discussing the issues and options and in drafting the language of the consensus proposal, and because the RSAC recommendation constitutes the consensus of some of the industry's leading experts on a given subject, FRA is often favorably inclined toward the RSAC recommendation. However, FRA is in no way bound to follow the recommendation, and the

[3] "Locomotive Crashworthiness and Cab Working Conditions Report to Congress", Office of Safety Assurance and Compliance, Federal Railroad Administration, 1996.

agency exercises its independent judgement on whether the recommended rule achieves the agency's regulatory goal, is soundly supported, and is in accordance with policy and legal requirements. Often, FRA varies in some respects from the RSAC recommendation in developing the actual regulatory proposal. If the working group or RSAC is unable to reach consensus on recommendations for action, FRA moves ahead to resolve the issue through traditional rulemaking proceedings.

On June 24, 1997, FRA tasked RSAC with the responsibility of making recommendations concerning standards for locomotive crashworthiness. Specifically, RSAC was charged with the investigation and development, if necessary, of crashworthiness standards to ensure the integrity of locomotive cabs in collisions, thereby minimizing fatalities and injuries to train crews. This task was to be performed in three phases. RSAC would first review relevant accident data and existing industry standards to determine which, if any, appropriate modifications to the cab structure are required to provide additional protection above that provided by S–580. In particular, RSAC was to specifically consider the following features: full-height corner posts; improved glazing design and support structure; equipment to prevent the post-collision entry of flammable liquids; and improved fuel tank design. Second, RSAC would examine to what extent improved anticlimber designs and/or incorporation of shelf couplers, used to complement the existing S–580 standards, serve to mitigate the effects of the above-listed collision scenarios. Third, RSAC would examine past and present methods of cab egress, along with the benefits of emergency lighting in the event of a collision. Based on a review of relevant accident data, available technology, implementation costs, and other applicable factors, RSAC would then develop appropriate recommendations.

To accomplish the above goals, RSAC created the Locomotive Crashworthiness Working Group (''Working Group''). Created on June 24, 1997, this group of about 40 members consisted of FRA personnel and representatives from railroad labor and management, States, and two major manufacturers of locomotives. The following organizations provided representatives to serve on the Working Group:

AAR;
AASHTO;
APTA;
ASLRRA;
BLET;
BMWED;
FRA;
IBEW;
RSI;
SMW;
UTU; and
NTSB.

The Working Group broke the task into three distinct phases. The first phase included review of accident data to formulate the most prevalent accident scenarios involving injuries and deaths. Second, the Volpe Center, along with contractor ADL, performed detailed analyses of how design improvements/additions to S–580 would affect the probable resulting injuries/deaths in each of five accident scenarios described later in this preamble.[4] Third, the Working Group analyzed and deliberated the proposed costs and benefits to determine the effectiveness of each of the proposed changes to S–580. The Working Group then presented its findings to the full RSAC Committee.

The Working Group conducted its meetings on the following dates at the following locations:

(1) September 8–9, 1997, Washington, DC;
(2) February 2–3, 1998, Jacksonville, FL;
(3) April 9–10, 1998, Fort Pierce, FL;
(4) July 14–15, 1998, Las Vegas, NV;
(5) October 28–29, 1998, Kansas City, MO;
(6) February 25–26, 1999, Washington, DC;
(7) June 15–16, 1999, Las Vegas, NV;
(8) October 19–20, 1999, Sterling, VA;
(9) December 13–14, 1999, Jacksonville, FL;
(10) October 9–10, 2001, Washington, DC;
(11) January 17–18, 2002, Jacksonville, FL; and
(12) June 28–29, 2005, San Francisco, CA.

Minutes from the above-referenced meetings have been placed in the docket of this proceeding.

The Working Group had its inaugural meeting on September 8–9, 1997, in Washington, DC. After reviewing its formal Task Statement to gain an understanding of the scope of its mission, the Working Group recognized that a smaller, more manageable group could more effectively consider the technical requirements and debate the advantages and disadvantages of the technical options available. Thus, the S–580/Engineering Review Task Force (''Engineering Task Force'') was created for this sole purpose. The Engineering Task Force was made up of Working Group members who either volunteered or named a fellow member as a representative. The Engineering Task Force met four times and conducted meetings by telephone conference on three occasions. These task force meetings served to progress the technical aspects of the issues and were open to all members of the Working Group. These meetings were somewhat less formal and were conducive to free exchange of technical information and ideas. A summary report on the Engineering Task Force's deliberations was made at each subsequent Working Group meeting.

The Working Group acknowledged the three distinct elements to the task. First, the group would need to identify, using recent accident data, the most prevalent locomotive collision scenarios which involve injuries and deaths. To this end, the Working Group requested that FRA review pertinent accidents for presentation at the February 2–3, 1998 Working Group meeting. The second element involved detailed engineering analysis of the effectiveness of specific crashworthiness features. To this end, FRA pledged the technical assistance of the Volpe Center, along with required support from outside contractors as needed. Third, the Working Group expressed interest in understanding the projected economic impact of any new requirements.

FRA commenced a review of locomotive accident data from 1995 to 1996 as a representative sampling of accidents. FRA then narrowed the pool of accidents to 23 and presented summaries of them to the Engineering Task Force at its first meeting. Collective discussion of these accidents with railroad and labor members of the Engineering Task Force helped to flesh out all the details of the locomotive types and designs. The Engineering Task Force then classified all 23 collisions into five major categories and developed a sequence of events, or scenario, for each accident. These five scenarios are:

[4] Tyrell, D., Severson, K., Marquis, B., Martinez, E., Mayville, R., Rancatore, R., Stringfellow, R., Hammond, R., Perlman, A.B., 1999, ''Locomotive Crashworthiness Design Modifications Study,'' Proceedings of the 1999 IEEE/ASME Joint Railroad Conference, April 13–15, 1999, IEEE Catalog Number 99CH36340, ASME RTD Volume 16; Tyrell, D.C., Martinez, E.E., Wierzbicki, T., ''Crashworthiness Studies of Locomotive Wide Nose Short Hood Designs,'' Proceedings of the 8th ASME Symposium on Crashworthiness, Occupant Protection and Biomechanics in Transportation November 14–19, 1999; Nashville, Tennessee; Tyrell, D., Severson, K., Marquis, B., Perlman, A.B., ''Simulation of an Oblique Collision of a Locomotive and an Intermodal Container,'' Proceedings of the 8th ASME Symposium on Crashworthiness, Occupant Protection and Biomechanics in Transportation November 14–19, 1999; Nashville, Tennessee.

(1) Coupled locomotive override resulting from a head-on train-to-train collision;

(2) Colliding locomotive override resulting from a head-on train-to-train collision;

(3)[5] Rear end/overtaking collision between a locomotive and a freight car;

(4) Oblique/raking collision between a locomotive and a freight car or part thereof, at a switch or upon passing a train on the adjacent track; and

(5) Offset collision between locomotive and freight car.

Once these scenarios were identified, a representative accident for each scenario was chosen to be studied in detail. The Engineering Task Force next gathered as many details as possible concerning the accidents and determined the crashworthiness features which were involved or could have had an effect in each scenario. Table 1 shows the scenarios, collision mode, relevant crashworthiness features, and representative accidents.

TABLE 1.—COLLISION SCENARIO, COLLISION MODE, AND ACCIDENT REPRESENTATIVE OF SCENARIO.

Collision scenario	Collision mode	Modified component	Accident location and date
1. Head-on collision between two freight trains	Coupled locomotive override.	Anti-climber Shelf-coupler	Smithfield, WV, August 20, 1996.
2. Head-on collision between two freight trains	Colliding locomotive override.	Collision post	West Eola, IL, January 20, 1993.
3a. Overtaking collision, locomotive to flat car	Loading of window frame structure.	Window frame structure	Phoenixville, PA, August 23, 1996.
3b. Grade crossing collision with highway truck carrying logs.	Loading of window frame structure.	Window frame structure	Phoenixville, PA, August 23, 1996.
4. Object, such as a trailer, fouling right-of-way of locomotive.	Corner loading of locomotive short hood.	Short hood	Selma, NC, May 16, 1994.
5. Offset collision between a locomotive and a freight car.	Corner loading of locomotive underframe.	Front plate	Madrone, NM, October 13, 1995.

Figure 1 shows schematic illustrations for the inline collision scenarios—Scenarios 1, 2, and 3b. In Scenario 1, the principal concern is a trailing locomotive overriding the leading locomotive, consequently eliminating the operator's cab (survival space) during the collision. In scenario 2 the principal concern is the relatively strong underframe of one colliding locomotive overriding the underframe of the other locomotive. In this scenario, the overriding locomotive crushes the operator's cab of the overriden locomotive. In scenario 3, the principal concern is the destruction of the upper portion (window area) of the operator's cab.

[5] The report from the Accident/Data Analysis and Benefits Assessment Task Force describes 6 scenarios. It contains 2 scenarios in which the window structure is impacted. In one, an overriding freight car impacts the window structure during a rear-end collision; in the other, logs impact the window structure in a grade crossing collision with a truck carrying logs. The Working Group initially considered the former, but the latter was used for the basis for crashworthiness evaluation of the window structure. See Table 1.

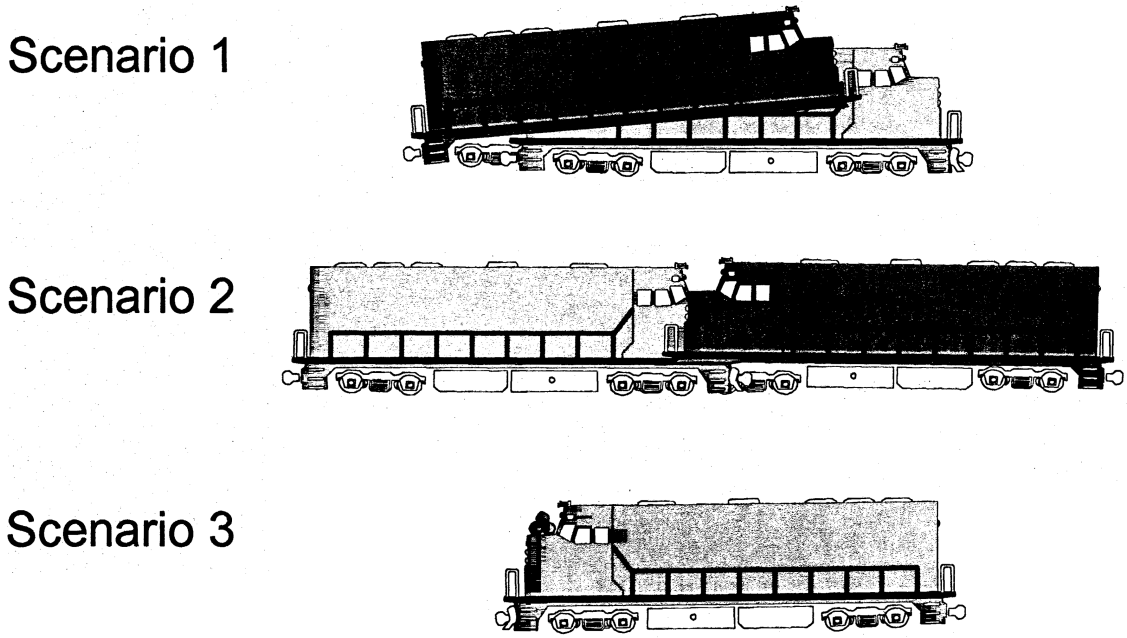

Figure 1. Schematics of In-Line Collision Scenarios.

Figure 2 shows schematic illustrations of the oblique collision scenarios—Scenarios 4 and 5. The illustration for Scenario 4 shows an intermodal trailer fouling the right of way of an oncoming locomotive. The principal concern is with the trailer striking the short hood outboard of the collision post and consequently causing sufficient damage to intrude into the operator's cab. The illustration of Scenario 5 shows a locomotive obliquely colliding with a freight car at a switch. The principal concern is that the freight car can intrude into the operator's volume by raking down the side of the locomotive.

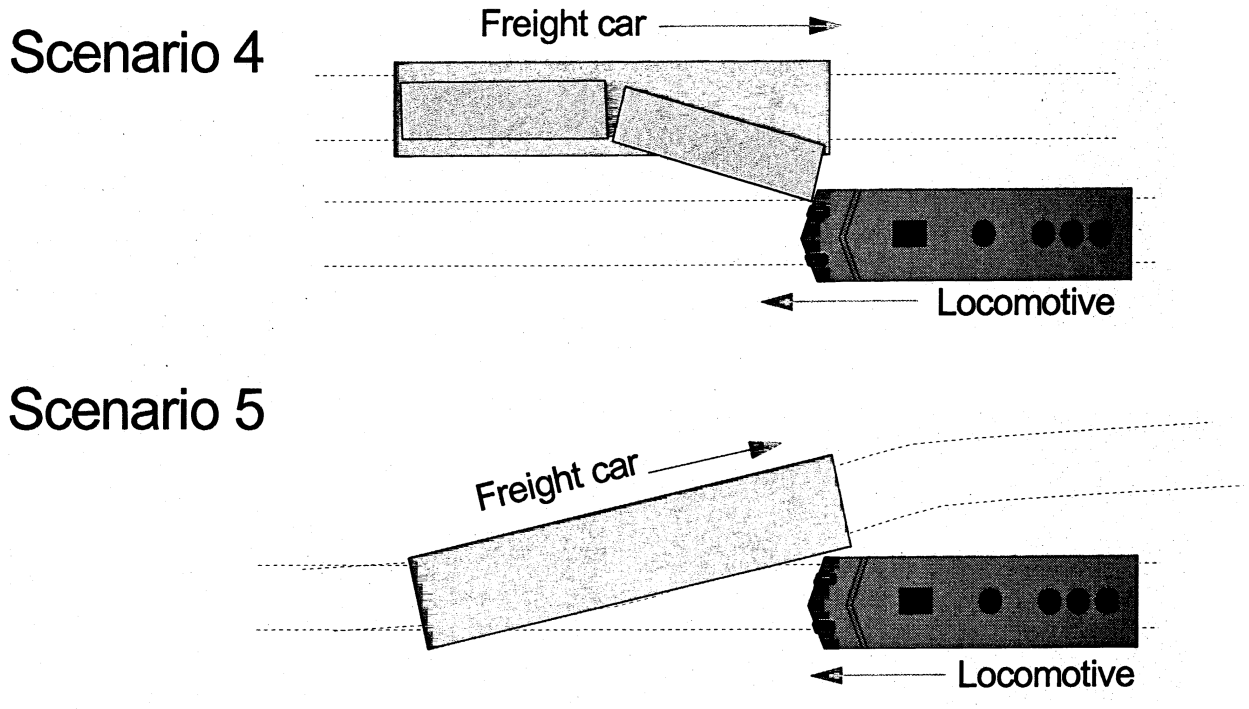

Figure 2. Schematics of Oblique Collision Scenarios.

Each collision scenario presents a significant risk of injury or death to locomotive cab occupants, and the Working Group recognized that effective reduction of this risk is the primary goal when considering locomotive crashworthiness standards.

The Working Group next examined a list of crash survival concepts that FRA had previously assembled. The Engineering Task Force discussed each concept in light of the accidents reviewed. There was general agreement among Task Force members about the continued need for braced collision posts, corner posts, and the utilization of crash energy management principles to minimize secondary collisions within the locomotive cab. The Task Force also discussed the variance of underframe sill heights, the frequency of locomotive roll-over occurrences, and the concept of crash refuges, but ultimately agreed with FRA's Report to Congress that these features held little promise as effective locomotive crashworthiness features and that further use of resources in pursuit of these concepts was not warranted. The Task Force then discussed collision post strength, wide-nose locomotive cabs and cab corner strength as well as locomotive front end strength up to the window level. The Task Force felt that these concepts required further development in order to further mitigate the consequences from the reviewed accidents, which included side/oblique collisions, coupled locomotive override, and shifted load collisions.

Standard S–580 includes the use of collision posts, wide-nose cab configurations of greater strength, and anti-climbing means to prevent override. The Working Group found that the accident survey showed the effects of S–580 on the survivability of locomotive crews to be substantial. However, they also recognized that higher levels of protection could be achieved by enhancing the strength requirements for future locomotive designs and by fortifying the current design of locomotives where possible and economically practicable. Thus, for comparison purposes, the group decided to model each of the collision scenarios to gauge the performance of each of the crashworthiness features under consideration. Data from the accidents was used for comparison with the analytic models and, where possible, for information on the crashworthiness performance of the baseline S–580 locomotive design. For Scenarios 3a and 3b, the model was compared with the accident that occurred in Phoenixville, PA, on August 23, 1996, but the grade crossing collision, also occurring on August 23, 1996 in Phoenixville, with logs impacting the window structure was used to evaluate the influences of changes in the window structure.

The Volpe Center, locomotive manufacturers and remanufacturers, and manufacturers of locomotive components made presentations to the Working Group on the current strength of the crash-related components and discussed the possibility of further strengthening of these components to improve overall crashworthiness. In addition, all members of the Working Group engaged in extensive discussion of these issues. Thus, only enhancements which were currently feasible were modeled.

In all, the Working Group considered the following locomotive crashworthiness features:

—*Shelf couplers:* A representative of the Mechanical Committee of Standard Coupler Manufacturers (MCSCM) reviewed the ''shelf coupler'' concept with the Working Group and traced its development from concept to the current status. Every freight car has a bottom-shelf E head coupler. Double shelf (top- and bottom-shelf) couplers are mandated by FRA on tank cars used to haul hazardous materials. These shelves limit vertical motion between two coupled couplers to approximately ±7¼ inches (184 mm). Passenger cars are typically equipped with tightlock couplers which keep the coupler faces at the same height. These couplers have demonstrated their effectiveness in preventing override for their respective equipment. During the discussion it was pointed out that a top shelf might assist in preventing override in a rear-end collision although it would require that a coupling actually occur for the shelf to be effective. However, type-F couplers commonly applied to locomotives already incorporate a top shelf feature. After deliberations, the Working Group decided not to pursue the concept of double shelf couplers as effective crashworthiness improvements. It was further noted that the coupling of MU cables and the air hoses between locomotives would be made more difficult if shelf couplers were required on locomotives. The potential for such coupler designs in preventing locomotive-to-locomotive override in a head-on collision was nonetheless evaluated.

—*Interlocking anti-climber:* The anti-climber design employed by the Canadian National Railway Company (CN) was evaluated. This design incorporates thicker webs and flanges than typical North American designs, and also includes exposed flanges running the width of the anti-climber.

—*Stronger collision posts:* Preliminary designs of collision posts with strengths up to the strength of the main underframe structure of the locomotive were developed and evaluated. Principal modifications considered were the addition of flanges and tapering the collision post.

—*Stronger window area structure:* Increased cab strength above the short hood was evaluated. Modifications considered included the use of thicker sheet metal for the window frame members.

—*Stronger short hood:* The influence of short hood strength on locomotive crashworthiness in an oblique collision was evaluated. Modifications evaluated included thickness of the short hood and the material used to make the short hood.

—*Front plate:* Increased front plate strength was considered as a potential modification for increased locomotive crashworthiness in an oblique collision with a freight car. The modification considered consisted of increased front plate thickness.

The results of the study indicate that strengthened collision posts and short hoods resulted in increased crashworthiness for particular collision scenarios. Shelf couplers were found not to be effective in preventing coupled locomotive override. Due to the fracture that occurs as the CN anti-climber design longitudinally crushes, this design was found to be ineffective in supporting the vertical forces that occur during locomotive-to-locomotive override, consequently allowing such overrides to occur. For an oblique collision of a locomotive with an empty hopper car, in which the locomotive is principally engaged below the underframe, modifications to the locomotive are not likely to influence the outcome of the collision.

ADL and Volpe Center representatives, presented results from their detailed analyses of how design improvements/additions in S–580 would affect the probable resulting injuries/deaths in each of the five scenarios (a copy of the results has been placed in the docket of this proceeding). Then, the Working Group analyzed and considered the proposed costs and benefits to determine the effectiveness of each of the proposed changes to S–580. The group also considered a performance standard for locomotive crashworthiness design.

From this point forward, the Working Group, assisted by the Task Force, debated the format for specifying the crashworthiness requirements, many issues relating to feasibility of alternative structures, and the economic impact of the proposed new requirements. Throughout, the group remained convinced that significant safety benefits could be achieved. The AAR members volunteered to adopt a specification (which would become AAR S–580–2005) meeting the performance criteria under discussion. This would act as a model design standard which satisfies the crashworthiness performance requirements. The group then focused its attention on the details of AAR S–580–2005 in order to refine and optimize them.

On November 2, 2004, FRA published a notice of proposed rulemaking (NPRM) addressing locomotive crashworthiness. In issuing the NPRM, FRA adopted the recommendations of the Working Group and the full RSAC. See 69 FR 63890. The NPRM provided for a 60-day comment period and provided interested parties the opportunity to request a public hearing. Based upon a request from an interested party, FRA issued a notice on January 12, 2005 extending the comment period from January 3, 2005 until February 3, 2005. See 70 FR 2105. FRA received comments from six interested parties.

On June 28 and 29, 2005, the Working Group conducted a meeting to review and discuss the comments received in response to the NPRM. Minutes from this meeting have been placed in the docket of this proceeding. The Working Group discussed all of the issues raised in the comments and considered various methods by which to address the comments. Based on information and discussions held at this meeting, the Working Group developed a recommendation for a final rule.

In July 2005, the Working Group presented its recommendations for resolution of the public comments to the full RSAC. On August 5, 2005, the RSAC voted to recommend issuance of the final rule while addressing the comments as proposed by the Working Group. FRA, having fully participated in the RSAC review, and finding that the final rule will improve rail safety, has accepted the recommendations of the RSAC in completing this final rule. FRA has also made various editorial corrections necessary to present in a clear, concise, and technically correct manner the intended final rule.

FRA has worked closely with the RSAC in the development of its recommendations and believes that the RSAC effectively addressed locomotive crashworthiness standards. FRA has greatly benefitted from the open, informed exchange of information that has taken place during meetings. There is general consensus among labor, management, and manufacturers concerning the primary principles FRA sets forth in this final rule. FRA believes that the expertise possessed by the RSAC representatives enhances the value of the recommendations, and FRA has made every effort to incorporate them in this final rule.

IV. Major Issues

A. Promulgation of Performance Standards Where Possible

FRA has endeavored to promulgate performance requirements in this final

rule rather than the more prescriptive design standards. FRA understands that this approach allows for greater flexibility in the design of locomotives and believes this approach has a better chance of encouraging innovation in locomotive design than less flexible design standards.

The following discussion includes a description of performance and design standards, the advantages and disadvantages of each, and the relationship between the design and performance standards.

Performance standards describe the behavior, or performance, of systems under prescribed circumstances. The principal advantage of such standards is that how the performance is achieved is not specified; any design approach can be used. The principal drawback to such standards for crashworthiness is that either destructive tests or detailed analyses (*i.e.*, computer simulation) are required in order to assure that the system can achieve the desired level of performance.

Design standards prescribe conditions which do not explicitly relate to the performance of the system. The principal advantage of such standards is that compliance can be verified with either non-destructive tests or closed-form analyses (*i.e.*, hand calculations). The principal disadvantages are that the desired level of performance is not guaranteed, assumptions about performance must be made when fashioning a particular design approach, and innovative approaches to achieving the regulatory objective may be precluded.

The Working Group considered specifying crashworthiness through design standards and performance standards. The Working Group recommended that design standards be employed for industry standards, and that a combination of design and performance standards for the federal regulations. The Working Group endeavored to have the recommended industry standards and the recommended federal regulations provide equivalent levels of crashworthiness.

This final rule includes both performance requirements and design requirements. The Working Group recognized that in certain cases, design standards are identified as presumptively responsive to performance requirements. This approach permits builders to use accepted designs without conducting costly analyses.

While the Working Group endeavored in its recommendations to make both sets of requirements as equivalent as possible, because of the differences in their nature, it is impossible to make them completely equivalent. The equivalence of the design and performance standards is discussed in detail in: Martinez, E., Tyrell, D., ''Alternative Analyses of Locomotive Structural Designs for Crashworthiness,'' presented at the 2000 International Mechanical Engineering Congress and Exposition, November 6, 2000, Orlando, FL, and included in the docket of this proceeding as Document No. FRA 2004–17645–10. There are no guarantees that a locomotive built to the design specification will have the performance required by the performance specification. If some aspect of the design approach assumed in developing the design requirements is changed, it may be possible to meet the design requirements but not meet the level of desired performance. Nevertheless, FRA believes that this final rule will accomplish the intended risk reduction.

Since performance standards are not appropriate for every regulation, it must first be determined whether certain factors preclude their use. For example, performance standards are not effective for regulation in areas where it is difficult to determine compliance (*i.e.*, a regulation requiring safer piloting of aircraft) or where determination of a proper minimum level of performance cannot be made easily or cost-effectively (see ''Performance-Based Regulations Guide,'' Federal Aviation Administration, October 31, 1997, a copy of which has been placed in the docket of this proceeding).

The Working Group sought to recommend locomotive crashworthiness performance standards where possible and identified the locomotive front end structure design as the best candidate for regulation through performance requirements. There was some concern among the Working Group members that if FRA issued performance requirements in this area, computer models would be required to show compliance with performance requirements for each new locomotive design. Thus, the Working Group decided to recommend that S–580 be incorporated by reference in its entirety. This concept became further refined by maintaining the performance requirements, yet providing a model design standard which, if met, would likely satisfy the performance requirements.

The Working Group's approach encourages introduction of more innovative designs. As previously noted, AAR agreed to provide the model design standard in the form of an enhanced S–580. Thus, the Working Group focused its efforts on developing a model design standard for locomotives of conventional design, herein called AAR S–580–2005.

Rather than requiring every design to show satisfaction of the performance standards here, FRA has offered AAR S–580–2005 as a conventional model design standard. FRA, in consultation with the RSAC Working Group, has performed the necessary analysis to show that AAR S–580–2005 meets the performance standards in most instances.

All of the subject areas covered by this final rule, other than locomotive front end, are presented in terms of design standards rather than performance requirements. This formulation required in-depth analysis of accident history, creation and validation of computer models, and comparison of various design improvements versus their baseline design. This was necessary to ensure that the minimum requirements being developed were in fact feasible and necessary. Also, S–580 provided a convenient and appropriate benchmark for testing of further improvements in this field, whereas FRA is not aware of any standards for subject areas such as locomotive cab interior configuration or locomotive cab emergency egress.

FRA will regulate designs for anti-climbing devices and underframe strength through design standards, in accordance with AAR S–580–2005. Under this standard, underframe strength is maintained at the level utilized in prior construction, providing basic compatibility among old and new locomotives. During preparation of the proposed rule, the AAR revised its anti-climbing standard to make it more rigorous by specifying that the required load (100,000 pounds) be met as applied to a 12 inch width anywhere along the anti-climber perimeter, in contrast to 200,000 pounds applied across the full width of the anti-climber. The Working Group recognized that even this improved structure would be of limited use in a head-on collision with another locomotive, because of horizontal crushing that would typically occur before the device could engage vertically. However, the group did find evidence that anti-climbing devices do provide protection to cab occupants in the event of a collision with a highway vehicle. FRA plans additional research in this area in the future.

FRA understands that these standards will not create absolutely crashworthy locomotives, but rather will tend to optimize crashworthiness design features in order to increase cab occupant safety under some of the most

common collision conditions. Since its inception in the early 1990's, S–580 has had a positive effect on locomotive crashworthiness design. This final rule is intended to capture the benefits of the industry's initiative and improve upon it where possible. FRA believes the RSAC resources were the best forum for recognizing and generating such improvements.

Other efforts are being undertaken by the industry and by FRA to reduce the risk of locomotive collisions. For instance, on March 7, 2005, FRA issued a rule on performance standards for the use and development of processor-based signal and train control systems (part 236, subpart H). See 70 FR 11052. The implementation of positive train control[6] (PTC) technology could reduce the number of train-to-train collisions. Current federal and state programs encourage the safety improvement of highway-rail at-grade crossings (including initiatives targeted at drivers of heavy trucks) and help reduce the risk of locomotive collisions. The risks associated with locomotive collisions with offset intermodal containers on freight cars on parallel tracks are being addressed by joint industry/FRA programs to promote better securement of trailers and containers.

However, all of these collision avoidance strategies require time and resources to work, and there is significant uncertainty regarding their full implementation. Further, as rail operations and highway traffic grow, significant effort may be required to ensure that collision-related casualties do not grow as well. Accordingly, taking action to mitigate the effects of collisions remains a prudent element of public policy, and is likely to remain so for some years to come.

B. Application to New Locomotives (See Also Section-by-Section Analysis for § 229.203)

It should be emphasized that FRA is not imposing these locomotive crashworthiness requirements on the current locomotive fleet. At this time, FRA believes safety benefits resulting from crashworthiness improvements would be best realized through future locomotive designs, rather than by retrofitting the current fleet. However, what ought to be considered a ''new locomotive'' for purposes of this final rule merits discussion.

FRA uses the locomotive build date of on or after January 1, 2009, for determining whether the locomotive is subject to the requirements of this final rule. This should give railroads and locomotive manufacturers adequate time to take necessary steps to ensure that these new locomotives will be in compliance with these requirements, and it corresponds with the date selected by the AAR for the revised S–580 standard to be implemented by manufacturers.

In the NPRM, FRA was particularly interested in whether a locomotive rebuilt with new components atop a previously-used underframe, or ''decked'' locomotive, should qualify as a new locomotive. These ''remanufactured'' locomotives may have a future life span nearly equivalent to a locomotive constructed on a new underframe. FRA previously defined ''new locomotive'' to include those locomotives rebuilt with a previously-used underframe and containing no more than 25% previously-used parts (weighted by cost). FRA invited comment on this issue and whether any other distinct class of locomotive should be considered a ''new locomotive'' for the purposes of this rule. FRA received comments from three parties seeking clarification of FRA's definition of ''remanufactured'' locomotive. These comments are addressed and discussed in the section-by-section analysis of ''Section 229.5 Definitions.''

FRA encourages, as discussed by the Working Group, the use of sound consist[7] management principles to place improved, more crashworthy locomotives as lead locomotives in consists. As these new locomotives are phased in, they will only comprise a portion of the fleet, and railroads will be faced with making decisions regarding their placement in a consist. FRA believes the benefits of this rule are maximized when these newer locomotives are used in the lead position to provide additional protection to the operating crews, and not in trailing positions behind older, less crashworthy locomotives, but FRA has not mandated the placement of the newer locomotives. The Working Group did not believe a requirement to mandate placement of these newer locomotives in the lead position would be beneficial, and further believed that the issue is relevant only during the phase-in period. In any event, in the future the entire locomotive fleet will be built to these or future crashworthiness standards. In the NPRM, commenters were invited to address this issue.

FRA received one comment on this issue. The commenter believed that since all future locomotives will be built to these new crashworthiness standards, a placement requirement would soon be unnecessary. In addition, the commenter believed that the requirement to place newer locomotives in the lead position would prove to be an ''operational nightmare'' for railroads to implement. The RSAC, through the Working Group, discussed this issue and agreed with the commenter that a placement requirement should not be implemented. As FRA has found that there is no current need to mandate the placement of newer locomotives in the lead position, FRA has adopted the RSAC's recommendation.

V. Section-by-Section Analysis

Amendments to Part 229

In contrast to requirements for passenger-occupied cab control cars and multiple unit (MU) locomotives, there are no current federal regulations governing conventional locomotive crashworthiness design. These new regulations revise subpart D of part 229 to address locomotive crashworthiness design for conventional locomotives.

Subpart A—General

Section 229.5 Definitions

This section contains an extensive set of definitions. FRA intends for these definitions to clarify the meaning of terms as they are used in the text of the final rule. The final rule retains all of the definitions proposed in the NPRM, with the exception of the definition of ''MU locomotive'', which will keep its existing definition as amended by FRA's Locomotive Event Recorder Rule, which was published subsequent to the NPRM. See 70 FR 37920 (June 30, 2005). FRA received one comment asking FRA to reconcile the potential conflict between the definition of ''MU locomotive'' proposed in the NPRM and the existing definition of ''MU locomotive'' contained in part 238. As the crashworthiness standards of this final rule do not apply to ''MU locomotives,'' FRA finds no need to further modify the existing ''MU locomotive'' definition. FRA will address the general issue of definitions related to MU locomotives in a forthcoming proposal originated by the Passenger Safety Working Group of the RSAC.

[6] PTC is a type of train control system containing modern processor-based technology that is defined by the protective functions that it provides. As a minimum, the core functions of a PTC system are: (1) Prevent train-to-train collisions (positive train separation), (2) enforce speed restrictions, including civil engineering restrictions (curves, bridges, etc.) and temporary slow orders, and (3) provide protection for roadway workers and their equipment operating under specific authorities. A PTC system can be classified into one of four levels of a system hierarchy depending on safety features or additional functions that it contains beyond the basic core functions.

[7] As used in this context, ''consist'' means the composition of a train.

The following terms have the same meaning as provided in part 238: ''corner post,'' ''lateral,'' ''locomotive cab,'' ''longitudinal,'' ''permanent deformation,'' ''power car,'' ''roof rail,'' ''semi-permanently coupled,'' ''Tier II,'' and ''ultimate strength.''

The term ''anti-climber'' is intended to have the same meaning as ''anti-climbing mechanism'' as it is used in part 238. The term ''anti-climber'' is used in place of ''anti-climbing mechanism'' to more accurately represent the name used in the rail industry.

The term ''collision post'' has essentially the same meaning as it is used in part 238; however, the definition is modified slightly in this final rule to narrow its application only to locomotives.

The term ''build date'' means the date on which the completed locomotive is actually shipped by the manufacturer or remanufacturer to the customer, or if the railroad manufactures or remanufactures the locomotive itself, the date on which the locomotive is released from the manufacture or remanufacture facility. In the NPRM, FRA asked for comment as to whether this definition accurately represents the industry's definition of ''build date.'' FRA received two comments addressing this issue. One commenter suggested that the Working Group revise the definition to reflect the date on which the locomotive is ready for delivery to a customer, regardless of when the customer actually takes delivery. However, another commenter suggested that the definition of ''build date'' remain unchanged. The Working Group discussed this issue and agreed with one of the commenters that the definition should remain unchanged. FRA agrees with the Working Group's recommendation based on the fact that the existing definition of ''build date'' will be simpler to apply uniformly to all affected parties. Subsequent to the RSAC providing recommendations on this final rule, FRA also added language to the definition to reflect what a build date for a locomotive would be if a railroad manufactured or remanufactured a locomotive itself. This addition captures the intent of the ''build date'' definition proposed in the NPRM and discussed by the Working Group, however, it contemplates the possibility that a railroad may manufacture or remanufacture its own locomotives.

The term ''designated service'' has the same meaning as provided in part 223.

The term ''design standard'' means a specification for the crashworthiness design of locomotives. This will usually contain a set of design requirements which do not specify ultimate performance, yet are not so specific in nature that they leave little flexibility to the designer. The overall design of the locomotive is allowed to vary, so long as the specified crashworthiness design requirements are met.

The term ''fuel tank, external'' differs slightly from the current part 238 definition and revises that definition by replacing the word ''volume'' with the word ''vessel.'' FRA believes that this is a more accurate and grammatically correct definition. In this rulemaking, FRA is also revising the current part 238 definition to mirror the definition in part 229.

The term ''fuel tank, internal'' differs slightly from the current part 238 definition and revises that definition by replacing the word ''volume'' with the word ''vessel.'' FRA believes that this is a more accurate and grammatically correct definition. In this rulemaking, FRA is also revising the current part 238 definition to mirror the definition in part 229.

FRA received one comment concerning the definitions of ''fuel tank, external'' and ''fuel tank, internal.'' This commenter agreed that the new definitions are ''more accurate and grammatically correct''; however, this commenter sought clarification as to what structural protection would be required for a fuel tank to be considered ''internal'' or within the ''car body structure.'' In response to this comment, FRA provides further clarification as to what is considered an ''internal'' fuel tank. A ''fuel tank, internal,'' as defined in this rule, is a fuel tank which ''does not extend outside the car body structure of the locomotive.'' In order to be considered ''internal,'' a fuel tank must be surrounded by more than just a minimally protective ''skin.'' The fuel tank must be surrounded by a more substantial structure and located within the support structure of the locomotive.

The term ''manufacture'' means the practice of producing a locomotive from new materials.

The term ''monocoque design locomotive'' means a locomotive in which the external skin or shell of the locomotive combines with the support frame to jointly provide structural support and stress resistance.

The term ''narrow-nose locomotive'' means a locomotive with a short hood which spans substantially less than the full width of the locomotive.

The term ''occupied service'' means any instance in which a locomotive is operated with a person present in the cab.

The term ''remanufacture'' means the practice of producing a ''remaufactured locomotive''.

As proposed, the term ''remanufactured locomotive'' means a locomotive rebuilt or refurbished from a previously used or refurbished underframe (''deck''), containing fewer than 25% previously used components (weighted by dollar value of the components). It is intended to capture the practice of decking a locomotive, or rebuilding it on a previously-used underframe. The proposed definition was intended to give better guidance to rebuilders of locomotives and railroads considering rebuilding a locomotive, and also to prevent avoidance of the proposed requirements by simply rebuilding a locomotive on a previously-used underframe containing less than 25% previously used components without making safety improvements.

FRA has already codified the term ''remanufactured locomotive'' in § 229.5, by including it as part of FRA's Locomotive Event Recorders Final Rule. 70 FR 37919. However, in response to the NPRM, three commenters requested additional clarification as to what constitutes a new locomotive for the purpose of determining applicability of the locomotive crashworthiness rulemaking. In general, commenters requested that FRA's locomotive crashworthiness rule provide more clarity and specificity to the methodology that should be used to calculate the 25%. One commenter noted that the definition of 25%, based on dollar value, does not specify the basis for comparison. Thus, FRA has provided further comparison requirements in the final rule's definition. The new definition adopted by this rule reads: ''[r]emanufactured locomotive means a locomotive rebuilt or refurbished from a previously used or refurbished underframe (deck), containing fewer than 25% previously used components (measured by dollar value of the components). For calculation purposes, the percentage of previously used components is determined with the equivalent value of new parts and is calculated using dollar values from the same year as the new parts used to remanufacture the locomotive.''

Another commenter noted that for all intents and purposes FRA's definition of a ''remanufactured locomotive'' is essentially equivalent to a new locomotive. This commenter also noted that this created a need for defining remanufactured (or rebuilt) locomotives where the percentage of previously used parts exceeds 25%. FRA agrees that there is a category or group of

locomotives that could be rebuilt or remanufactured that would not come under the requirements of this regulation. However, the regulation's design and/or structure does not demand that such a definition be added.

The term ''semi-monocoque design locomotive'' means a locomotive in which the external skin or shell of the locomotive partially combines with the support frame to provide structural support and stress resistance.

The term ''short hood'' means the part of the locomotive above the underframe located between the cab and the nearest end of the locomotive. Short hoods may vary in length and are usually, but not always, located toward the front-facing portion of the locomotive.

The term ''standards body'' means an industry and/or professional organization or association which conducts research and develops and/or issues policies, criteria, principles, and standards related to the rail industry.

The term ''wide-nose locomotive'' means a locomotive used in revenue service which is not of narrow-nose or monocoque or semi-monocoque design.

Subpart D—Locomotive Crashworthiness Design Requirements

Section 229.201 Purpose and Scope

Paragraph (a) provides that the purpose of the final rule is to help protect locomotive cab occupants in the event of a collision with another locomotive, on-track equipment, or with any of several types of objects which may foul railroad trackage. Paragraph (b) provides that this subpart sets forth standards for the design of crashworthy locomotives. It is important to note that these standards will not protect all occupants in all collision situations; rather, this rule calls for design improvements in areas which FRA believes will have the greatest effect on the reduction of cab crew injuries and fatalities associated with the most prevalent types of locomotive collisions. There were no comments regarding this provision and it is, therefore, unchanged in this final rule.

Section 229.203 Applicability

Paragraph (a) states that the requirements of this subpart apply to all locomotives manufactured or remanufactured on or after January 1, 2009. The only locomotives exempt from these requirements are those specifically listed in paragraphs (b) and (c). The AAR S–580–2005 applies to locomotives manufactured after December 31, 2008. FRA determined that it would be prudent to coordinate implementation of the rule with the effective date of the AAR–S–580–2005 to avoid any confusion. FRA utilizes the locomotive build date in calculating the exemption of the current locomotive fleet from requirements of this final rule. The entire current locomotive fleet would therefore not be subject to the requirements of this final rule, other than for the rebuilt and remanufactured requirements discussed below. FRA believes that approximately three years will be sufficient to allow manufacturers to re-engineer and re-tool in order to comply with these new standards and has specified this paragraph's applicability date accordingly, particularly since the revised S–580 standard was published by the AAR by circular dated February 7, 2005.

This paragraph further applies to remanufactured locomotives, as defined in § 229.5. FRA believes that the practice of ''decking'' a locomotive (stripping a locomotive to its underframe, or deck, and refurbishing it with new components) essentially creates a new locomotive. Since the useful life of a decked locomotive is practically the same as a newly built locomotive, FRA believes it should be subject to these new requirements. However, these new requirements are not intended to apply to locomotives undergoing periodic maintenance or a major overhaul not involving ''decking.'' Most large railroads perform a major overhaul after about 9–12 years, replacing or servicing many components, but not ''decking'' it. See also Major Issue (b), ''Application to new locomotives.''

FRA anticipates that the calculation of the percentage of previously used parts should not only be performed with the equivalent value of new parts, but also utilizing dollars from the same year as the new parts. In other words, if the value of the new parts is calculated using parts purchased in 2008, then the value of the previously used components is also calculated using 2008 prices of equivalent new parts. If it is not possible to provide the cost of an equivalent new part, then the cost for the most similar part should be used.

For example, if the only part being reused for the production of a new locomotive is the underframe and the equivalent value of a new underframe is 15% of the cost of the locomotive, then for purposes of this regulation this locomotive would be considered a ''remanufactured'' locomotive and would be required to meet these crashworthiness requirements. This example's calculation would be:

[Cost of Equivalent New Underframe Comparable to Reused Underframe/ ($ Cost of Equivalent new Underframe Comparable to Reused Underframe + $ Cost of New Parts) = 0.15].

However, if there were ten parts being reused, including the underframe, and the equivalent value of new parts represents 30% of the cost of the locomotive, then for purposes of this regulation this locomotive would not be considered remanufactured and would not come under these requirements. This example's calculation would be:

[Cost of Equivalent New Parts Comparable to the 10 Reused Parts/ (Cost of Equivalent New Parts Comparable to the 10 reused parts + Cost of New Parts) = 0.30].

FRA believes this definition and requirement recognize that a locomotive comprises a number of parts, principally the chassis, prime mover, main generator, trucks, traction motors and electrical system. FRA also realizes that each railroad derives its own best method of determining when overhauls must be performed. Some use mileage, some use hours, and some use more subjective factors. While the need for this work on a cyclical basis is a given, the manner in which it is conducted varies from railroad to railroad.

FRA recognizes that some railroads conduct the overhaul on a preventative basis, component by component, at the same time as routine repairs and maintenance are performed. Others conduct the locomotive overhaul on a planned cycle using the wear of the engine component as the determinant, and still others follow a ''run to failure'' approach.

Paragraph (b) excludes from application of this rule passenger cab cars, or MU and DMU cars, and semi-permanently coupled power cars built for passenger service. These types of locomotives are subject to the requirements of part 238.

Paragraph (c) excludes from application of most provisions of this rule locomotives used in designated service. This includes locomotives without occupant cabs and also locomotives referred to as ''slugs.'' On these locomotives the cab doors have been welded shut or otherwise secured to a similar extent so that crews cannot occupy the cab. The designated service classification is intended to mirror its application in FRA's Safety Glazing Standards at § 223.5. Locomotives used in designated service are still subject to the fuel tank requirements in § 229.217. FRA mandates this requirement because it has found that locomotive fuel tank ruptures place at risk the environment and all persons within the local area of the collision site. Since locomotives

used in designated service may still be used as power in a consist, FRA is concerned that any fuel tank rupture on one of these locomotives would pose a safety risk at least equivalent to that from other road locomotives. Therefore, all new locomotives are required to comply with this fuel tank requirement.

There were no comments it is, therefore, unchanged in this final rule.

Section 229.205 General Requirements

Paragraph (a) of this section requires the design of all locomotives subject to this subpart, except monocoque or semi-monocoque design locomotives and narrow-nose locomotives, to meet the performance criteria in Appendix E (hereafter referred to as ''wide-nose design locomotives''). All wide-nose design locomotives must comply with the requirements of Appendix E; however, the manufacturers or remanufacturers of these locomotives are given options as to how they demonstrate their compliance. Compliance with the performance criteria must be satisfied by complying with any one of the three options provided.

One commenter was concerned that these three options do not provide the option of performing full-scale collision tests or analysis, as defined in Appendix E. FRA wants to clarify that these three options are simply a means of demonstrating that a design meets the performance standards in Appendix E. A manufacturer or remanufacturer could, in theory, also demonstrate compliance with Appendix E by conducting full-scale collision tests for a particular locomotive design, but the three options in § 229.205 (a) provide a less costly means of compliance.

In paragraph (a)(1), FRA has provided a model design standard, AAR S–580–2005, which FRA has found to satisfy the performance standard in Appendix E. This paragraph references that AAR standard's criteria for wide-nose locomotives, which has been analyzed in cooperation with the RSAC and found to satisfy the intent of the performance criteria. FRA does not require compliance with this standard as to wide-nose locomotives; rather, it is being provided simply as a design standard that FRA has already found to satisfy the performance requirements of Appendix E. Providing an available design standard aids the locomotive original equipment manufacturers (OEMs) by making it unnecessary for them to conduct elaborate analysis of new designs to establish compliance with the performance standards. Representatives of two OEMs that participated throughout development of the NPRM in the RSAC embraced this approach and found it very cost effective. Paragraph (a)(2) allows compliance with FRA-approved new crashworthiness design standards or changes to existing crashworthiness design standards. Finally, in paragraph (a)(3), FRA provides the option of meeting an FRA-approved alternative crashworthiness design. The procedures for seeking such approval of new or revised standards or alternative designs are provided in §§ 229.207 and 229.209.

Paragraph (b) requires that monocoque and semi-monocoque design locomotives comply with the elements of the new AAR standard applicable to those types of locomotives. Typically used in passenger service, monocoque/semi-monocoque locomotives provide occupant protection in a different manner than wide-nose locomotives. Specifically, because much of the longitudinal strength of the locomotive is provided by the side panels of the unit (and potentially the roof) as well as the underframe, the front of a monocoque or semi-monocoque locomotive performs as an integral unit and resists collapse very effectively. By contrast, the wide-nose locomotive, which has relatively little strength above the underframe, is made safer by strengthening the short hood and allowing it to absorb energy as it collapses when subjected to higher forces. Allowing a similar amount of crush in the case of the monocoque/semi-monocoque design would result in an almost complete loss of the cab volume. The RSAC Working Group reviewed the accident history of monocoque/semi-monocoque locomotives already in service that meet the new standard as built and found that they appear to be at least as safe as wide-nose locomotives enhanced to meet the new AAR standard and Appendix E of this final rule. Existing manufacturers of this type of locomotive have indicated that they believe the new AAR standard is very reasonable and should be effective in ensuring that locomotives of this type are built to protect cab occupants.

As the recommended text of the NPRM was being circulated for final ballot within the RSAC Working Group, a supplier member of APTA, which builds locomotives for commuter railroads, noted the existence of the APTA standards, APTA SS–C & S–034, for monocoque/semi-monocoque passenger locomotives. A copy of this standard has been placed in the docket of this rulemaking as Document No. FRA–2004–17645–17. In the NPRM, FRA solicited comments regarding whether the final rule should recognize this existing APTA standard as an additional option for compliance.

Two commenters responded, and both believed that this APTA standard provided an equivalent level of safety as the crashworthiness standard contained in this final rule. One commenter expressed support for adopting APTA SS–C & S–034 as a compliant design option. The other commenter, however, did not believe that adoption of this standard was appropriate. This commenter believed that APTA SS–C & S–034 contained additional requirements, not contained in this final rule, which would create an undue additional regulatory burden.

The Working Group analyzed and discussed these comments and recommended that FRA not adopt APTA SS–C & S–034 as an equivalent crashworthiness standard. Through discussions at the last Working Group meeting, FRA learned that APTA intends to phase out its standards for non-passenger carrying locomotives. In light of this, and the fact that this APTA standard has not been fully evaluated in relation to the final rule's standards, FRA adopts the Working Group's recommendation.

One commenter also suggested that § 229.205(b) be modified to clarify that locomotives built to the structural requirements contained in §§ 238.405, 238.409 and 238.411 also meet the minimum locomotive crashworthiness requirements for monocoque and semi-monocoque designs. FRA agrees that the end strength provisions in part 238 for Tier II locomotives provide equivalent safety standards for structural design as the basic cab car, MU or DMU design standards set forth in this regulation. FRA also agrees that the end strength provisions in part 238 for Tier II locomotives require an equivalent level of crashworthiness as § 229.205(b). FRA is, therefore, providing the option of complying with the standards in §§ 238.405(a), 238.409 and 238.411, in lieu of complying with the end strength provisions for Tier I locomotives in this rule. (Tier I means operating at speeds not exceeding 125 mph, as defined in part 238). All of the cited provisions must be met in order for this alternative to apply, since the ''safety cage'' concept embodied in the Tier II rule depends on the presence of all elements.

Paragraph (c) requires that narrow-nose design locomotives be built to the requirements of the new AAR standard for that type of locomotive. The RSAC Working Group considered the need for a suitable standard to address locomotives used frequently to make up trains and pick up and set out cars. Presently, older narrow-nose

locomotives are preferred for this type of work because they provide a better field of view for the engineer. FRA agreed that the safety of ground personnel, and avoidance of train accidents involving fouling equipment and misaligned switches, would be best served by allowing that narrow-nosed locomotives be built to a less stringent standard. Accordingly, protection of the cab under the new AAR standard will be significantly better than existing narrow-nose units (through strengthening of the short hood structure and the addition of corner post requirements for the cab itself), but not as robust as required for wide-nose locomotives.

One commenter expressed concern that these crashworthiness standards are not feasible for implementation in a ''narrow cab'' design. Specifically, this commenter suggested that the Working Group eliminate the ''corner post'' requirement for narrow-nose locomotives intended primarily for yard and limited over-road service. The Working Group reviewed this comment and recommended that the ''corner post'' requirements remain in the final rule as they are feasible and do provide a safety benefit for narrow-nose locomotives. FRA agrees and adopts the Working Group's recommendation.

It should be noted that the final rule (see §§ 229.207, 229.209) allows the qualification of monocoque/semi-monocoque and narrow-nose locomotives using alternative standards and approved designs. However, unlike the situation for all other locomotives, neither Appendix E nor any other portion of the rule spells out precisely how the case for safety equivalence would be made. This is in part because FRA research and RSAC Working Group attention focused on the principal opportunity for safety advances through the improvement of wide-nose design locomotives (by far the largest category of new locomotives built in the last decade and under order today). Further, as noted above, existing monocoque/semi-monocoque designs have performed admirably; and design choices for the narrow-nose are seriously limited due to functional requirements.

At the time of the publication of the NPRM, the scope of AAR S–580–2004 varied slightly from that of the proposed rule. Specifically, in section ''1.0 Scope'' of AAR S–580–2004, ''road switcher/intermediate service locomotives'' were exempt from meeting the AAR design standard. However, ''road switcher/intermediate service locomotives'' were required to meet the performance standards of the NPRM. One commenter pointed out this apparent discrepancy between the NPRM and AAR S–580–2004. However, since the publication of the NPRM, this variation between the AAR standard and FRA's rule has been remedied. The new AAR S–580–2005, a copy of which has been placed in the docket of this proceeding, no longer exempts ''road switcher/intermediate service locomotives'' from its standard. AAR S–580–2005 and this final rule now both require ''road switcher/intermediate service locomotives'' to meet these crashworthiness standards.

Section 229.206 Design Requirements

This section requires all locomotives subject to this subpart to include anti-climbers, methods of emergency egress, and emergency interior lighting designed in compliance with the crashworthiness requirements contained in AAR S–580–2005.

AAR S–580–2005 requires that the cab end of a locomotive must incorporate an anticlimber of a specified width, depth, and design to resist an upward or downward vertical force of 100,000 pounds, applied over any 12 inches of the anticlimber, without exceeding the ultimate strength of the anticlimber or its connector. The Working Group understood, and FRA agrees, that the forces generated between two colliding locomotives are of sufficient magnitude that the anticlimber will most likely crush and absorb some energy. The most likely scenario where the anticlimber can prevent intrusion into the occupied cab area is in collisions at grade crossings when a highway vehicle struck by a locomotive may try to climb up and the motions and forces generated are resisted by the anticlimber. One commenter suggested that the anti-climber requirement in the AAR S–580–2005 be changed to 100,000 pounds without permanent deformation for consistency with the requirements in § 238.205(a). Section 238.205(a) actually refers to withstanding ''an upward or downward vertical force without failure,'' so no change is needed to achieve consistency. The commenter also recommended retaining the proposed § 229.206 and deleting § 238.205(b). FRA agrees that maintaining different standards for application to conventional locomotives is inappropriate, and in conformity with the stated intention to address locomotive crashworthiness requirements in part 229 as much as possible, FRA has added a sentence to § 238.205(b) making it clear that anti-climbing arrangements for locomotives built under the new subpart D to part 229 are governed by § 229.206, rather than by § 238.205(b).

AAR S–580–2005 requires that the locomotive cab allow for exit through at least one opening in any locomotive orientation. The Working Group faced the problem that research in this area is lacking. However, the problem is well-defined: when the locomotive lies on its side after a collision, the occupants may have trouble reaching a door that is not obstructed, especially if they are injured. The Working Group therefore made some general recommendations for the design of cabs to incorporate adequate means of emergency egress. FRA has adopted these recommendations. FRA has also funded development of three alternative types of egress mechanisms, any one or more of which may be used to satisfy the requirements. One commenter suggested that either the AAR S–580 or § 229.206 be modified to require emergency egress for all locomotives, not just wide-nose locomotives. The AAR S–580–2005 has been updated to make emergency egress requirements applicable to all locomotives.

AAR S–580–2005 requires the placement of, and specifies illumination levels for, locomotive cab emergency lighting. These requirements are similar to those required for passenger equipment in § 238.115, except that the required duration for lighting levels in freight locomotive cabs is less, to reflect the design distinction between the two types of equipment. Passenger equipment generally has use of an auxiliary power source, making it more convenient to provide ample power when needed. Most freight locomotives have only one power source and its reliability is important for powering the prime mover. Further, FRA sees locomotive crew members as being more familiar with the smaller layout of a freight locomotive cab and emergency lighting capabilities therein than the average passenger traveling in passenger equipment subject to part 238.

FRA received two comments concerning emergency lighting. One commenter recommended that FRA remove the locomotive cab emergency lighting requirement from the final rule. The commenter argued that the emergency lighting requirements are not necessary due to the relatively small size of freight locomotive cabs, the high level of familiarity of their occupants with emergency procedures, the location of emergency exits, and the non-trivial ergonomic and design challenges for relatively little or no increase of safety. The emergency lighting requirement has been researched and discussed in detail by

the Working Group. Providing the situational awareness following a serious but survivable crash may be critical to safe evacuation of the crew. In the interest of safety, the Working Group and FRA both believe that this requirement should remain a part of this final rule. The other commenter suggested that either the AAR S–580 or § 229.206 be modified to require emergency lighting for all locomotives, not just wide-nose locomotives. The AAR S–580–2005 has been updated to make emergency lighting requirements applicable to all locomotives.

AAR S–580–2005 provides general design requirements for the interior configuration of a locomotive cab. In order to minimize the chance of injury to occupants, protruding parts, sharp edges, and corners in the locomotive cab must be rounded, radiused, or padded. These requirements are similar to those covering passenger equipment in § 238.233(e), and the language used is very similar.

AAR S–580–2005 provides design requirements for locomotive cab appurtenance (including cab seat) securement. The Working Group formulated these requirements based on manufacturer testing and its collective, general experience with locomotive collisions. FRA expects that testing methods to determine compliance with this requirement will be state of the art. Testing should demonstrate that the mountings, including cab seat mountings, meet the strength requirements without permanent deformation. Localized deformation may be acceptable for compliance purposes with this section.

The disparities in these cab seat securement requirements from those currently required by §§ 238.233(f) and (g) for passenger equipment are due solely to the difference in how compliance is measured. In § 238.233, seat mountings must withstand forces of 8.0 g longitudinal, 4.0 g lateral, and 4.0 g vertical without ultimate failure of the connection. This rule requires that locomotives comply with the AAR S–580–2005, which requires that all appurtenances/mountings withstand forces of 3.0 g longitudinal, 1.5 g lateral, and 2.0 g vertical without permanent deformation, as defined in § 229.5.

The Working Group believes that, given current designs, all appurtenances and mountings which comply with § 238.233 requirements would most likely meet these requirements and vice versa. FRA agrees. However, FRA also agrees with the commenter that suggested that FRA amend § 238.233(f) to avoid having different requirements for the same issue in two different regulations for seat attachment. FRA has not deleted this provision, which is required to govern existing locomotive construction; however, FRA has clarified that § 229.206 applies to locomotives required to be built under the new subpart D of part 229 as it takes effect on January 1, 2009.

One commenter also suggested that either the AAR S–580 or § 229.206 be modified to require interior configuration requirements for all locomotives, not just wide-nose locomotives. The AAR S–580–2005 has been updated to make interior configuration requirements applicable to all locomotives.

FRA did not need to amend the regulatory text to this section to address the comments it received, therefore, this provision is unchanged in this final rule.

Section 229.207 New Locomotive Crashworthiness Design Standards and Changes to Existing FRA-Approved Locomotive Crashworthiness Design Standards

This section provides procedures to be followed when seeking FRA approval of new locomotive crashworthiness design standards. It also covers procedures for obtaining FRA approval of changes to existing standards which FRA has already approved. These procedures are similar to approval procedures currently used by FRA in other contexts. See, for example, § 238.21.

FRA envisions the possibility that other industry groups, such as passenger locomotive manufacturers, might desire a separate design standard from AAR S–580–2005. This section outlines the procedures to be used to obtain FRA approval for such a design standard. FRA recognizes that considerable expense could be required to validate a new design standard with respect to the performance criteria in Appendix E. Thus, FRA does not expect that submission of petitions for new locomotive crashworthiness design standards will be an ordinary occurrence.

However, FRA does foresee a need for flexibility with approved standards to enable industry standards bodies to suggest often highly technical changes to a previously-approved design standard without incurring delays inevitably invoked by the Federal administrative review process. This section sets two levels of FRA scrutiny, depending on the degree of change to the previously-approved standard. The lowest level of scrutiny is involved when non-substantive changes are involved. See paragraph (d) of this section. A higher level of scrutiny would be required when substantive changes are involved. However, since most of these changes are likely to be incremental in nature, FRA only requires evidence that the resulting standard still satisfies the performance criteria by showing an equivalent or better level of safety. See paragraph (c) of this section.

Paragraph (a) explains the purpose of this section. This section provides the procedures that must be followed by parties seeking approval of new crashworthiness design standards and changes to existing FRA-approved crashworthiness design standards. This paragraph also limits those who may seek approval of changes to existing FRA-approved crashworthiness design standards. Only a standards body which has adopted an FRA-approved design standard may request to change that standard. FRA has imposed this limitation in order to prevent parties who have no stake in a design standard from seeking to impose changes to it. A party seeking changes to a design standard that has not been approved by FRA should follow the procedures for approval of new design standards, paragraph (b), or the procedures for approval of alternative design standards provided in § 229.209.

Paragraph (b) specifies submission procedures for petitions for new design standards. Each petition must be submitted to the FRA Associate Administrator for Safety and be titled ''Petition for FRA Approval of a New Locomotive Crashworthiness Design Standard.'' Paragraphs (b)(1) and (b)(2) require the petition to contain contact information for a representative of the petitioner and the proposed design standard in detail. Along with the proposed design standard, FRA needs to understand the intended type of use of the locomotive sought to be built by a petitioner. Paragraph (b)(3) requires this information. Paragraph (b)(4) requires the petition to contain data and analysis showing how the proposed design standard satisfies the performance requirements in Appendix E. Examples of the types of data and analysis required are provided in § 229.211(c)(1).

Paragraph (c) deals with substantive changes to an FRA-approved design standard. Each petition must be submitted to the FRA Associate Administrator for Safety and be titled ''Petition for FRA Approval of Changes to a Locomotive Crashworthiness Design Standard.'' Paragraphs (c)(1) and (c)(2) require the petition to contain contact information for a representative of the petitioner and the proposed change in detail. Along with the proposed change,

FRA needs to understand the intended type of use of the locomotive sought to be built by a petitioner. Paragraph (c)(3) requires this information. These substantive changes, defined as all other changes not covered by paragraph (d) (non-substantive changes), would likely result in a change to the design standard which might call into question its compliance with the performance criteria of Appendix E or equivalence to the applicable technical standard. For these types of changes, FRA requires, in paragraph (c)(4), validation that the resulting standard still satisfies the requirements stated in § 229.205. Types of validation which FRA will consider appropriate are described in § 229.211(c)(1).

Paragraph (d) specifies procedures for obtaining FRA approval of non-substantive changes to existing FRA-approved design standards. Each petition must be submitted to the FRA Associate Administrator for Safety and be titled ''Petition for FRA Approval of Non-substantive Changes to a Locomotive Crashworthiness Design Standard.'' Paragraphs (d)(1) and (d)(2) require the petition to contain contact information for a representative of the petitioner and the proposed change in detail. FRA believes that these non-substantive changes will usually be editorial, procedural, or interpretive in nature, requiring a relatively low level of FRA scrutiny. FRA understands such changes could be necessary in order for standards bodies to effectively carry out their duties. Paragraph (d)(3) requires a detailed explanation of how the proposed change is non-substantive. FRA will make an initial determination whether the proposed change is non-substantive. If FRA determines that the proposed change is in fact substantive, FRA will process the petition as a substantive proposed change in accordance with paragraph (c) of this section. If FRA determines that the proposed change is non-substantive, FRA will process the petition in accordance with § 229.211(c).

There were no comments regarding this provision and it is, therefore, unchanged in this final rule.

Section 229.209 Alternative Locomotive Crashworthiness Designs

This section provides procedures to be followed when seeking FRA approval of an alternative locomotive crashworthiness design. These procedures are similar to approval procedures currently used by FRA in other contexts. See, for example, § 238.21.

FRA envisions the possibility that a railroad or locomotive manufacturer will desire to explore innovative locomotive designs which do not satisfy AAR S–580–2005 or any other current FRA-approved design standard. In such case, FRA has provided a procedure in this section whereby it would assess the design directly against the performance criteria of Appendix E. This section outlines the procedures to be used to obtain FRA approval for such a design. FRA recognizes that considerable expense could be required to validate an alternative design with respect to the performance criteria in Appendix E. However, the state of the art of validation techniques is evolving, and FRA does not find it far-fetched that the expenses associated with validation processes today will decrease. Overall, FRA expects that submission of petitions for alternative locomotive crashworthiness designs will be a rare occurrence.

FRA also understands that the market for locomotives is very much customer-driven and that railroads of all sizes require a great degree of operational flexibility. Thus, FRA assumes that a locomotive capable of performing road-haul service will at some point be called upon to perform such service. Since the performance criteria are objectives designed for road-haul service locomotives, FRA contemplates approval of design standards and alternative designs not meeting the performance criteria or applicable technical standard only under a waiver proceeding (see part 211, subpart c). In such a proceeding, FRA would expect the petitioner to demonstrate that (1) service conditions will not approximate assumptions used for performance criteria (i.e, locomotive cannot possibly be used for road-haul service), and (2) adequate design restrictions on use will reinforce those assumptions. For example, appropriate restrictions on a locomotive's horsepower guarantee that it cannot effectively be used as a road-haul locomotive.

Paragraph (a) explains the purpose of this section. This section contains procedures which govern locomotive designs which are truly innovative and unconventional. Manufacturers or railroads will most likely use the procedures in this section to gain FRA approval, rather than attempt to fit within an already-established design standard or alter an existing design standard. FRA believes that builders/railroads should not necessarily be forced to work with existing standards, should they be willing to have validated the safety features of their design against the performance criteria of Appendix E (or equivalence to the applicable technical standard).

Paragraph (b) specifies submission procedures for petitions for alternative locomotive crashworthiness designs. Each petition must be submitted to the FRA Associate Administrator for Safety and be titled ''Petition for FRA Approval of Alternative Locomotive Crashworthiness Design.'' Paragraphs (b)(1) and (b)(2) require the petition to contain contact information for a representative of the petitioner and the proposed design in detail. Paragraph (b)(3) requires that, along with the proposed alternative design, the petitioner also specify the type of service to which the locomotive will be put. FRA needs to understand the intended type of use to appreciate the probable collision risks to which the locomotive will be subjected. Paragraph (b)(4) requires the petition to contain data and analysis showing how the proposed design standard satisfies the performance requirements in Appendix E or is equivalent in protection of cab occupants (in the case of narrow-nose or monocoque/semi-monocoque designs) to the applicable technical standard. Examples of the types of data and analysis required are provided in § 229.211(c)(1).

There were no comments regarding this provision and it is, therefore, unchanged in this final rule.

Section 229.211 Processing of Petitions

This section outlines the procedures that FRA will follow in reaching a decision on petitions submitted under § 229.207(b) (petitions for approval of new design standards); § 229.207(c) (petitions for approval of substantive changes to an approved design standard); and § 229.209(b) (petitions for approval of alternative design standards).

Paragraph (a) provides that FRA publish a notice in the **Federal Register** for each petition received seeking approval of new or alternative crashworthiness designs or substantive changes to existing crashworthiness designs. This is to notify interested parties of the pending FRA action.

Paragraph (b) provides procedures for interested parties to comment on any petitions submitted to FRA pursuant to this section. FRA is aware that changes in design of conventional locomotives might impact the safety of locomotive crews and other railroad employees. Therefore, this paragraph provides such parties the opportunity to comment. Further, FRA welcomes comments in electronic form as well as in written form. If FRA determines that additional information is required to appropriately consider the petition, FRA will conduct

a hearing on the petition. Notice of such hearing will provided in the **Federal Register**. Procedures for the conduct of such hearing will be in accord with § 211.25.

Paragraph (c) addresses FRA action on petitions submitted for FRA approval pursuant to §§ 229.207(b), 229.207(c), and 229.209.

Paragraph (c)(1) describes the types of validation techniques required for FRA approval of design standards, changes to design standards, and alternative locomotive crashworthiness designs. FRA provides several validation methods which it considers satisfactory. FRA is aware of the basic types of modeling and testing of locomotive design standards, as well as the relative costs associated with these processes. Any validation technique considered to be state-of-the-art, or generally acceptable within the scientific community, should suffice for purposes of this paragraph, whether it be computer software modeling or full-scale crash testing of locomotives. FRA does realize that technological and market changes may make modeling and/or testing methods more or less cost-effective, and would thus require validation to such an extent as reasonably practicable. Finally, in order to facilitate and expedite the approval process, FRA would encourage effective peer review of submitted standards prior to submission.

For locomotives subject to paragraph (a) of § 229.205, where solely incremental changes are being introduced to a previously approved design standard, FRA does not require proof of satisfaction of all Appendix E performance requirements. In this case, FRA would require submission of validation material for only those areas affected by the changes. FRA feels that to require full satisfaction of the Appendix E performance criteria would be too great a burden and would simply result in the requirement that subsequent petitioners ''reinvent the wheel'' in areas where it has already been invented.

In the event that a truly innovative alternative design is submitted for FRA approval (*i.e.*, not close to satisfying a previously-approved design standard), FRA would require full validation of its crashworthiness per Appendix E. However, if a proposed alternative design varies only slightly from a previously-approved design standard, FRA would require only validation of those features which are different, in lieu of proof of satisfaction of all Appendix E performance criteria. Designers ought to be able to take advantage of prior safety validation efforts on conventional designs (reflected in FRA-approved design standards). Thus, when an alternative locomotive design approaches that of a previously-approved design standard, FRA would prefer that validation efforts be focused on areas where the alternative design takes a different approach from the approved design standard. FRA envisions validation of such alternative designs to be demonstrated through competent engineering analysis which compares the new alternative design to that of an approved design or design standard and demonstrates an equal or better performance. As detailed in Appendix E, the primary performance measure to be evaluated is crush distance. Crush distance restrictions are utilized in order to determine compliance with the goal of preventing intrusion into the occupied cab space.

FRA made one small change to this section by deleting the last sentence from paragraph (c)(1) because FRA anticipates that some of the petitions that will be submitted will show the petitioner's conformance with a relevant design standard (*e.g.*, semi-monocoque or narrow-nosed) rather than conformance with Appendix E.

In paragraphs (c)(2) and (c)(3), FRA establishes a 90-day goal for disposition of a petition under this section, due to the technical review which may be required. It should be noted that 90 days is only a target goal. FRA will take more than 90 days to reach a decision if warranted. FRA will grant a petition only if it finds that the proposed design standard or change to an existing design standard satisfies the performance standards specified in Appendix E or provides a level of safety at least equivalent to the recognized technical standard (in the case of narrow-nose or monocoque/semi-monocoque designs). FRA will deny a petition if it determines that the proposed design standard or change to an existing design standard does not satisfy the performance standards specified in Appendix E or is not equivalent in safety (as applicable). FRA will also deny a petition if it determines that the petition does not meet the procedural requirements of §§ 229.207 and 229.209.

Paragraph (c)(3) also contains a provision allowing petitions which have been denied to be re-opened for cause. For example, FRA might re-open consideration of a petition for an alternative locomotive crashworthiness design if a specific locomotive collision risk had been significantly affected by factors (*i.e.*, elimination of highway-rail at-grade crossings or adjacent parallel track) not present during the initial consideration of the petition.

Finally, paragraph (c)(4) states that FRA will send copies of its written decision to all parties to the petition and will also place its decision in the docket for that petition. FRA believes that it is more accurate to refer to placing the decision in the docket for the petition, as opposed to the docket ''of this proceeding'', as was proposed in the NPRM. FRA may also post its decision on its Web site, *www.fra.dot.gov.*

There were no comments regarding this provision and it is, therefore, unchanged in this final rule.

Section 229.213 Locomotive Manufacturing Information

Paragraph (a) of this section requires each railroad operating a railroad subject to this subpart to retain the date upon which the locomotive was manufactured or remanufactured, the name of the manufacturer or remanufacturer, and the design specifications to which the locomotive was manufactured or remanufactured.

Paragraph (b) provides that the information required by paragraph (a) must be located permanently in the locomotive cab (*i.e.*, a plaque or plate affixed to the inside of the cab) or provided within two business days upon request of FRA or an FRA-certified State inspector. This requirement would provide a means by which it can be rapidly determined whether a locomotive is subject to the requirements of this rule.

A related issue of locomotive identification of safety features is communication of these features to crews. The benefits of this rule may not be fully realized if the occupants of the locomotive are not made aware of the fact that the locomotive has crashworthiness design features and of the specific safety features incorporated in the locomotive design. Consequently, FRA believes it is imperative that this information be communicated to locomotive cab occupants. At the same time FRA recognizes that the safety improvements contained in this rule are incremental in nature and that, ultimately, crew members faced with an imminent hazard will need to make their own decisions as to whether to remain in the locomotive. Commenters were asked to specifically address whether any particular method of identification ought be used so as to promote uniformity, or whether carriers should be required to simply identify the locomotive with the appropriate information by any reasonable means, such training of crews. One commenter suggested that FRA afford railroads

discretion as to how to train or inform their crews and that FRA not issue regulation to address this issue. FRA agrees with the RSAC Working Group that railroads and labor organizations should determine how best to deliver this information to employees, which could include articles in organization periodicals, special notices, decals, inclusion in training curricula, or other means of conveying the information.

Section 229.215 Retention and Inspection of Designs

Paragraph (a) provides a requirement that locomotive manufacturers and remanufacturers maintain crashworthiness designs for those locomotives subject to subpart D. This requirement is designed to ensure that compliance with the requirements of this subpart can be readily determined in the event that a locomotive's compliance with its design or performance standard is called into question. It is also meant to ensure that the relevant designs are available in the event a locomotive subject to this subpart is modified or repaired. FRA believes these records should be available so that any repairs or modifications made to the locomotives do not compromise the crashworthiness features to such an extent that they are no longer in compliance with the final rule.

The requirement that these records be maintained for the life of the locomotive is limited to a 20-year term, which approximates the normal period an initial owner would typically retain control of the unit. As further specified below, the 20-year term runs from the date that a locomotive is manufactured. In the case of a remanufactured locomotive, the 20-year term begins anew on its date of remanufacture. For the purposes of this regulation, the manufacture and remanufacture dates are determined by the date a locomotive is shipped by the manufacturer or remanufacturer to the customer. In concluding this rulemaking, FRA has noted that the retention period as proposed would literally expire upon the occurrence of an accident/incident leading to the destruction of the locomotive, perhaps making the records unavailable to FRA or NTSB at the very time they would be most needed. The final rule corrects this oversight, providing for retention of the records of one year following the event.

Paragraph (b) requires that all records of repairs or modifications to crashworthiness features of a locomotive subject to this subpart be kept by the owner or lessee of the locomotive. These records must also be maintained for the life cycle of the locomotive, up to a period of 20 years from the date these repairs/modifications are made. In concluding this rulemaking, FRA has noted that the retention period as proposed would literally expire upon the occurrence of an accident/incident leading to the destruction of the locomotive, perhaps making the records unavailable to FRA or NTSB at the very time they would be most needed. The final rule corrects this oversight, providing for retention of the records of one year following the event. Under this paragraph, transfer of ownership of a locomotive does not relieve the transferor of responsibility to maintain the repair/modification records. The railroad would be relieved of its responsibility to maintain the repair/modification records after the earlier of a 20-year period or when the locomotive is permanently retired from service. In the NPRM, FRA invited comments from small railroads regarding this issue, since FRA is aware that many smaller railroads obtain locomotives from larger railroads, rather than purchasing new from the manufacturer. FRA did not receive any comments concerning this issue.

Paragraph (c) outlines the basic procedure for inspection of locomotive designs. FRA, or FRA-certified State inspectors, will request to view designs for specified locomotives, and the railroad will comply by making the designs available for inspection and photocopying by FRA, or FRA-certified State inspectors, within 7 days. FRA believes that this provision is essential to its ability to ensure compliance with paragraphs (a) and (b) of this section.

FRA understands that railroads may not perform the actual repairs/modifications or possess the actual designs themselves, but rather would have them stored by a third party such as the AAR, the leasing company, or even the manufacturer. Paragraph (d) allows the records to be maintained by third parties; however, the manufacturers, remanufacturers, owners, and lessees of locomotives subject to this subpart will remain responsible for compliance with this section.

Section 229.217 Fuel Tank

Paragraph (a) provides that locomotives equipped with external fuel tanks meet the October 1, 2001 version of AAR Standard S–5506 requirement for external fuel tanks, with the exception of Section 4.4 as noted below. That version of AAR S–5506 has been placed in the docket of this proceeding. These requirements were formerly classified as an AAR Recommended Practice, RP–506. RP–506 became effective on June 1, 1995. Only preliminary observations of its effect have been made. Data from FRA accident records has shown that RP–506 has had a positive effect on the performance of fuel tanks in locomotive collisions and derailments. The NTSB in NTSB Report #PB92–917009 on fuel tank integrity has accepted RP–506 as a means to mitigate fuel tank breaches (a copy of the report has been placed in the docket of this proceeding). On October 1, 2001, AAR S–5506 was adopted as an AAR standard.

Section 238.223(a) requires that passenger locomotives with external fuel tanks comply with a similar version of S–5506. As FRA decided in the Passenger Equipment Safety Standards final rule (64 FR 25651–25652 (May 12, 1999)), to omit one of the provisions of RP–506 (now S–5506) since it does not appear to be a safety standard, but rather a fueling requirement; this provision is intentionally omitted here as well. This provision, Section 4.4 (''Fueling'') of S–5506, states that ''[i]nternal structures of [the] tank must not impede the flow of fuel through the tank while fueling at a rate of 300 gpm [gallons per minute].'' FRA does not consider fueling rates to be a safety concern, but rather an operational consideration; therefore, section 4.4 has not been included.

One commenter suggested that FRA delete Appendix D to part 238 and that § 238.223(a) require external fuel tanks comply with § 229.217(a). The commenter believed that this is necessary to avoid redundancy and to ensure that there is only one interpretation of the requirements of external fuel tanks. FRA has decided to refer this issue to the RSAC Passenger Safety Working Group for resolution. However, for the present time, FRA is clarifying that passenger locomotives that are subject to the requirements of §§ 238.223 and 238.423 are not required to comply with the provision of § 229.217(a).

Paragraph (b) requires locomotives equipped with internal fuel tanks to meet the requirements of § 238.223, which governs design of fuel tanks on passenger locomotives. Although FRA contemplates most locomotives equipped with internal fuel tanks will be used in passenger service, FRA has classified locomotives by design rather than intended service, in order to allow maximum operational flexibility by the carriers.

Appendix E—Performance Criteria for Structural Design

This appendix provides performance criteria for the structural design of locomotives (other than monocoque/semi-monocoque design or narrow-nose design), comprised basically of the front end structure inclusive of a wide, short hood and collision posts with a cab structure. Demonstration that these criteria have been satisfied may be accomplished through any of the methods described in § 229.211. In conventional locomotive design, these two areas cover basically all of the major structural support separating cab occupants from the impacting objects in a locomotive collision. The criteria, which were recommended by RSAC and adopted by FRA, were developed by the Engineering Task Force with support from the Volpe Center. Each lettered paragraph of this appendix covers a different collision scenario, indicating the objective of the scenario, the proxy, or contemplated colliding object, the conditions of the impact, and the allowable results. The performance standard being adopted will allow for the maximum level of flexibility in future locomotive design.

The performance criteria for the locomotive crashworthiness design features provide a minimum level of structural safety for locomotive cab occupants involved in a collision. The logic behind the performance criteria is that locomotives designed to meet the performance criteria specified in this final rule will be able to preserve survivable space in the locomotive cab in a collision under similar conditions as specified in this appendix, as well as those involving lower closing speeds. For instance, a locomotive traveling 30 miles per hour colliding with a heavy highway vehicle (weighing no more than 65,000 pounds, or 32½ tons) at a highway-rail grade crossing should maintain sufficient survivable space for its occupants if it is built to the standards required by this final rule, even if it effectively overrides the underframe of the locomotive. However, since actual collision conditions may vary greatly, these figures should only be used as guidelines and not relied upon as precise cutoff levels of locomotive crashworthiness. Whether there will be sufficient survivable space inside the locomotive cab depends on many unpredictable factors as well.

With these considerations, FRA desires to allow for maximum flexibility in locomotive design by issuing performance criteria to protect cab occupants where possible. The criteria for the front end structure of the locomotive are based on specified collision scenarios or performance requirements.

Paragraph (a) provides performance criteria for design of the front end structure where, in conventional locomotive design, collision posts would normally be found. This collision scenario is intended to simulate a collision between a locomotive and a heavy highway vehicle at a highway-rail grade crossing. The proxy object in this scenario is designed to represent the heavy highway vehicle. The intended simulated impact conditions are specified for the closing speed, point of impact, and maximum allowable crush distance along the longitudinal axis of the locomotive. The improvements in crashworthiness required under this scenario will also have the effect of reducing intrusion into the cab during collisions between locomotives and other rail rolling stock.

Paragraph (b) provides performance criteria for design of the front end structure, where, in conventional locomotive design, the short hood is normally found. The objective of this scenario is to simulate an oblique collision with an intermodal container offset from a freight car on an adjacent parallel track. This collision scenario is based on the collision conditions, other than speed, found in the May 16, 1994 Selma, NC, collision involving an overhanging intermodal trailer on northbound CSXT 176 freight train and the lead locomotive on southbound Amtrak passenger train 87. The closing speed between these two trains was estimated at about 110 mph. The proxy object in this scenario represents the intermodal trailer, and the intended simulated impact conditions are specified for the closing speed (30 mph), point of impact, and maximum allowable crush distance along the longitudinal axis of the locomotive.

In the course of the discussions held, the Working Group also performed research into strengthening the window frame structure of wide-nose locomotives. The window frame structure for typical wide-nose locomotives currently in use in North America is made up of two corner posts and a central post all of which are tied into the roof. After considerable discussion at the last meeting prior to the issuance of the NPRM, the Working Group decided against recommending design load requirements as well as performance requirements for the window frame structure. The key argument raised by members of the Working Group was that a majority of the cost, approximately one-half of the total cost for all modifications, would be incurred by the need for extensive engineering re-design and fabrication re-tooling. The benefits associated with the modifications to the window frame structure were small based upon the accident review. FRA agreed with the Working Group's analysis and decided to postpone promulgation of proposed requirements for the window frame structure for wide-nose locomotives pending further detailed study.

AAR S–580–2005, Locomotive Crashworthiness Requirements

FRA has approved AAR S–580–2005 as an acceptable design standard, for purposes of satisfying the performance criteria of Appendix E.

AAR S–580–2005 contains design requirements for locomotive front end structure design, as well as other miscellaneous design requirements, some of which are Federal requirements as well. Structural requirements listed in AAR S–580–2005 are divided into three different subsections: one for locomotives of traditional wide-nose designs, one for locomotives of narrow-nose design, and one for those of semi-monocoque/monocoque design. There are separate requirements for these general classifications of designs in order to account for the different service conditions they typically operate under and the significantly different crush characteristics of the designs. For example, FRA mandates less stringent front end structure requirements for narrow-nose locomotives because they are used mainly in switching service. During switching operations, visibility to and from the cab is essential in preventing injuries and fatalities. FRA feels that requirements for a significantly enhanced front end structure on narrow-nose locomotives would be detrimental to visibility to and from the locomotive cab. Manufacturers have indicated that further strengthening would require major redesign, with structural members taking up more physical space in the cab. As a result, FRA has balanced these safety risks by increasing the strength requirements for the front end of narrow-nose locomotives, but only to the extent that the functionality of these locomotives would not be compromised.

Requirements in AAR S–580–2005 for wide-nose locomotive front end structure encompass three main components: anti-climbers, collision posts, and short hood structure.

Collision posts: the collision posts are the primary crash-energy absorbing features on a locomotive involved in an in-line train-to-train collision or impact with a large motor vehicle. S–580, as

adopted in 1989, provided for a ''500,000/200,000 pound'' collision post. Through its efforts, the Working Group found that strengthened collision posts would provide additional collision protection to the cab occupants. Specifically, the group found that a collision post which can handle an application of 750,000 pounds at the point of attachment and 500,000 pounds of force applied at a point 30 inches above the top of the underframe could withstand the same damage in collisions occurring at a closing speed 2 mph higher than the baseline S–580 design. A collision post which can handle 800,000 pounds at the same point behaves similarly in collisions occurring at closing speeds 8 mph faster than the baseline S–580 design. However, increasing the strength of the collision posts to a point beyond that of the strength of the underframe would serve no useful purpose, because the underframe would fail before the collision posts.[8] The Working Group found it more desirable to have the collision posts fail before the underframe does, thereby reducing the possibility of override due to either the formation of a ramp caused by underframe deformation or catapulting. The Working Group ultimately recommended the ''750,000/500,000 pound'' collision post as a minimum standard. FRA agrees and the final rule reflects this recommendation.

AAR S–580–2005 also requires collision posts to extend to a minimum of 24 inches above the finished floor and be located forward of the position of any seated crew member. The position of the collision posts and their required height were developed to provide the crew members a survivable area in the event of a frontal collision with an object above the underframe of the locomotive. The Working Group discussed the advantages of such a survivable volume in that it may help encourage crew members to remain in the cab rather than jumping, as they often do in the face of a collision. This would prevent unnecessary injuries, and even fatalities, resulting from jumping in these situations. FRA agrees with the Working Group's recommendation and the final rule reflects this recommendation.

Short Hood Structure: The short hood structure is constructed primarily from steel sheets, and spans the width of the locomotive from the finished floor up to the window frame. It provides additional protection to occupants. Since it extends the width of the locomotive (unlike collision posts), it is the primary means of protection in the event the locomotive collides with an object at an angle or a load is applied longitudinally outside of the collision posts, such as in a collision with an offset trailer on a flatbed car.

A short hood structure meeting the performance requirements in Appendix E should provide adequate protection to cab occupants in a 30-mile per hour collision with an offset trailer on a flatcar on an adjacent track. Such a structure should be able to withstand a load of 400,000 pounds. It is also intended to crush in a collision, absorbing some energy. Thus, the model design requirements of AAR S–580–2005 provide guidelines for design of a short hood structure having such strength characteristics.

AAR S–580–2005 also covers front end structural requirements for semi-monocoque locomotives in section 8.0 ''Monocoque or Semi-monocoque Locomotive Designs.'' This design standard was adapted from the performance requirements of Appendix E and through variation of the design standard for wide-nose locomotives. Since locomotives of monocoque or semi-monocoque design are more efficient in managing crash energy due to the load-bearing capabilities of the wall and roof structures, they may be designed using a slightly weaker underframe than the conventional wide-nose locomotives. This type of design better distributes loads applied to its front end by effectively transferring them to the walls and roof, as well as the underframe. This design allows it to utilize a less-resistant underframe in order to provide the same degree of protection. Limited data from the performance of semi-monocque locomotives involved in locomotive collisions has corroborated this theory.

Section 7.0 ''Narrow-Nose Locomotives'' covers design requirements for the front-end structure of narrow-nose locomotives. Strength requirements for the front end structure of narrow-nose locomotives are less stringent than those for wide-nose locomotives. The narrow nose on these locomotives simply does not allow for equivalent protection at the widest part of the locomotive in front of the cab. Although this makes the wide-nose locomotive more desirable for use in road freight service, narrow-nose locomotives have become useful in intermediate-haul and local switching operations because they offer cab occupants a much greater range of vision from the cab. During these types of movements, unobstructed vision is very important because railroad personnel are often standing on or near the right of way directing the movement. FRA believes that provision must be made for use of the narrow-nose locomotive design to maintain an appropriate level of safety during intermediate-haul and local switching operations. FRA provides a design standard for narrow-nose locomotives which maximizes the strength of the front corners using existing technology and materials without sacrificing occupant visibility from the cab.

The most significant safety risk with respect to narrow-nose locomotives is their regular use in road-haul service. Since the Class I railroads have followed a trend of purchasing more and more wide-nose locomotives to be used in road freight service, the use of narrow-nose locomotives in a manner inconsistent with their intended service (*i.e.*, over-utilization in road freight service) is unlikely. Through the course of its deliberations, the Working Group had discussed possibilities of (1) restricting service of narrow-nose locomotives to intermediate- and local-haul and transfer train service, (2) restricting them to a maximum speed limit, and (3) restricting design of these locomotives to a maximum horsepower limit. In its final recommendation, the Working Group decided not to recommend any service or design restrictions. FRA has no reason to believe that the trend of purchasing wide-nose locomotives will not continue, and thus does not issue any service or design restrictions on narrow-nose locomotives in this rule.

One commenter requested clarification as to how crush is defined in the collision post and the short hood scenarios. Crush is the relative longitudinal distance between the centers of gravity of the impacting object and the locomotive. Crush is measured from the initial contact until maximum penetration. The centers of gravity are located on the undeformed bodies, and are assumed to be fixed to the bodies. This is the definition of crush used in the engineering studies conducted in support of this rule. Full or sub-scale tests, hand calculations, detailed numerical modeling, or some combination of these techniques may be used to show that the requirements of Appendix E are met.

A maximum of 24 inches of crush of the locomotive is allowed in Appendix E (a) *Front end structure (collision posts)* and a maximum of 60 inches of crush in Appendix E (b) *Front end structure (short hood)*. These distances were chosen based on the results of the engineering studies conducted in

[8] ADL presentation at July 14–15, 1998 Working Group meeting. This presentation has been placed in the docket of this rulemaking.

support of this rule. These studies show that a significant increase in locomotive crashworthiness can be achieved by requiring the collision posts or equivalent structure to crush up to 24 inches, and that it is difficult to create a design for such structures capable of crushing longer distances while still absorbing energy. These studies also show that the locomotive short hood structures can crush for distances up to 60 inches while absorbing energy.

The commenter recommended that the Working Group re-evaluate whether additional prescriptive requirements, such as specific dimensional parameters for collision post positioning, be included in the performance standard. The commenter also suggested that a statement be added clarify whether it is acceptable to have complete separation of the collision posts from the underframe. The commenter also suggested that this part specify that the proxy object must be centered laterally along the longitudinal centerline of the locomotive. FRA does not intend to prescribe methodologies for demonstrating compliance. Compliance with the existing requirements and proposed requirements can be shown using reasonable engineering methods, which include appropriate analyses and tests.

It should be noted that the Working Group abandoned discussions over a fourth design standard, that of the yard switcher locomotive. Such a locomotive would be designed for use solely in the assembling and disassembling of trains, and could be designed to the standard of S–580.

AAR Standard S–5506, Performance Requirements for Diesel Electric Locomotive Fuel Tanks (October 1, 2001)

This standard contains the requirements recommended by the Working Group and adopted by FRA for the design of external fuel tanks, with the exception of Section 4.4 as noted above. The full text of AAR–S–5506 has been placed in the docket of this proceeding. This AAR standard was adopted from an earlier recommended practice, RP–506, which was first adopted in 1995.

Amendments to Part 238

In contrast to requirements for passenger-occupied cab control cars and multiple unit (MU) locomotives, there are no current Federal regulations directed towards conventional locomotive crashworthiness design. In the NPRM, FRA proposed that the revisions to part 229 revise subpart D to address locomotive crashworthiness design for all locomotives covered by this rule while moving § 229.141 to part 238 as § 238.224. FRA subsequently determined that moving § 229.141 to part 238 may cause more confusion than necessary, in particular due to draftsmanship constraints to properly state the applicability dates for the various equipment covered by § 229.141 and part 238, in particular. In addition, moving § 229.141 to part 238 would have no effect on the substantive requirements of the two regulations. Therefore, FRA has decided to keep § 229.141 in its current location. However, the final rule clarifies its application in relation to provisions in part 238. Specifically, new paragraphs (a)(6) and (b)(6) of § 229.141 restate what is currently provided in paragraphs (d) and (e) of § 229.3. In addition, section 238.201(a)(2) now cross-references § 229.141 for clarity as well.

FRA amended § 229.141 as part of the May 12, 1999, Passenger Equipment Safety Standards final rule, so that its requirements would not conflict with the requirements of part 238. However, in the case of passenger equipment excluded from the structural requirements of §§ 238.203 through 238.219, and § 238.223 by operation of § 238.201(a)(2), there is no direct conflict, and FRA intended that such passenger equipment remain subject to any applicable requirements in § 229.141. Hence, paragraphs (d) and (e) were added to § 229.3 as part of the 1999 rulemaking. See 64 FR 25659–25660. FRA is hereby adding clarity to the relationship between these two regulations as best as we can with minimal addition of regulatory text, as stated above.

One commenter also suggested that FRA either delete both § 238.205(b) and § 238.233(f) or modify them to reference only § 229.206. FRA agrees with the commenter that both sections should be amended to avoid having different requirements for the same issue in two different regulations for anti-climbers and seat attachments. FRA has not deleted these provisions, which are required to govern existing locomotive construction; however, FRA has clarified that § 229.206 applies to locomotives required to be built under the new subpart D of part 229 which takes effect on January 1, 2009.

Subpart A—General

Section 238.5 Definitions

The term ''fuel tank, external'' revises the current part 238 definition by replacing the word ''volume'' with the word ''vessel.'' FRA believes that this is a more accurate and grammatically correct definition.

The term ''fuel tank, internal'' revises the current part 238 definition by replacing the word ''volume'' with the word ''vessel.'' FRA believes that this is a more accurate and grammatically correct definition.

Regulatory Impact

Privacy Act

Anyone is able to search the electronic form of all comments received into any of FRA's dockets by the name of the individual submitting the comment (or signing the comment, if submitted on behalf of an association, business, labor union, etc.). You may review DOT's complete Privacy Act Statement in the **Federal Register** published on April 11, 2000 (Volume 65, Number 70; Pages 19477–78) or you may visit *http://dms.dot.gov*.

Executive Order 12866 and DOT Regulatory Policies and Procedures

This rule has been evaluated in accordance with existing policies and procedures, and determined to be significant under both Executive Order 12866 and DOT policies and procedures. (44 FR 11034; Feb 26, 1979). FRA has prepared and placed in the docket a regulatory analysis addressing the economic impact of this final rule.

As part of the regulatory analysis FRA has assessed quantitative measurements of cost and benefit streams expected from the adoption of this final rule. For a twenty-year period the estimated quantified costs total $81.6 million, and have a Present Value (PV) of $43.9 million. (In calculating the present value, FRA used a 7% percent discount rate and 2004 dollars.) For this period the estimated quantified benefits total $125.9 million, which have a PV of $52.4 million. Over this twenty-year period, the Net Present Value (NPV) of this final rule is a positive $8.5 million. The major costs anticipated from adopting this final rule include: redesign costs for locomotive models; and the marginal cost increases for labor and supplies needed for the more crashworthy locomotives.

The major benefits anticipated from implementing this final rule include: a reduction of the damages incurred by locomotives when they are involved in collisions; and a reduction in the severity of casualties resulting from locomotive collisions. In addition, there should be a reduction in the number of lost work days by employees who occupy locomotive cabs.

Regulatory Flexibility Act

The Regulatory Flexibility Act of 1980 (5 U.S.C. 601 *et seq.*) requires a review of proposed and final rules to assess their impact on small entities. FRA has prepared and placed in the docket a Small Entity Impact Assessment and Evaluation which assesses the necessary and pertinent small entity impacts.

Executive Order No. 13272, ''Proper Consideration of Small Entities in Agency Rulemaking,'' requires Federal agencies, among other things, to notify the Chief Counsel for Advocacy of the U.S. Small Business Administration (SBA) of any of its draft rules that will have a significant economic impact on a substantial number of small entities. The Executive Order also requires Federal agencies to consider any comments provided by the SBA and to include in the preamble to the rule the agency's response to any written comments by the SBA, unless the agency head certifies that the inclusion of such material would not serve the public interest. 67 FR 53461 (Aug. 16, 2002).

The SBA stipulates in its ''Size Standards'' that the largest a railroad business firm that is ''for-profit'' may be, and still be classified as a ''small entity'' is 1,500 employees for ''Line-Haul Operating'' Railroads, and 500 employees for ''Switching and Terminal Establishments.'' ''Small entity'' is defined in 5 U.S.C. 601 as a small business concern that is independently owned and operated, and is not dominant in its field of operation. SBA's ''size standards'' may be altered by Federal agencies on consultation with SBA and in conjunction with public comment. Pursuant to that authority, FRA has published a final policy which formally establishes ''small entities'' as being railroads which meet the line haulage revenue requirements of a Class III railroad. Currently, the revenue requirements are $20 million or less in annual operating revenue. The $20 million limit is based on the Surface Transportation Board's (STB's) threshold of a Class III railroad carrier, which is adjusted by applying the railroad revenue deflator adjustment (part 1201). The same dollar limit on revenues is established to determine whether a railroad shipper or contractor is a small entity.

For this final rule there are over 410 railroads which could potentially be affected. The impacts from this regulation are primarily a result of increased cost to produce more crashworthy locomotives. These costs include re-design and engineering costs for the new locomotive designs/models, and for the marginal costs of the incremental crashworthiness improvements. All of these impacts or costs are passed on to customers or purchasers of new locomotives. However, only railroads which purchase new or original equipment will be impacted, and FRA is not aware of any small railroads that purchase new locomotives. Hence, FRA does not expect this regulation to directly impact any small railroads.

FRA expects that minimal costs of re-designing a new locomotive will be passed through to a small entity when they purchase a used, re-designed locomotive. Small entities will not likely be purchasing those used, re-designed locomotives until 15 or 20 years after this regulation becomes effective. FRA does not believe that in 15 or 20 years the relative cost of a used locomotive that is in compliance with this regulation will change significantly from the current cost of a used locomotive. Therefore, FRA does not expect that this regulation will have any indirect impact on small railroads either.

To determine the significance of the economic impact for this final rule's Regulatory Flexibility Act requirements, FRA invited comments to its NPRM from all interested parties concerning the potential economic impact on small entities caused by this rule.

FRA received one comment from an interested party who believed that this rule would be detrimental to short line and regional railroads. The commenter believed that this rule would discourage smaller railroads from rebuilding locomotive diesel engines. The commenter suggested that the threshold used to determine whether or not a locomotive is considered ''remanufactured'' be modified upward so as to exempt smaller railroads.

The commenter referenced § 229.203—''Applicability'', of the NPRM. However, the commenter's reference to this section was made without acknowledgment of the definition of ''remanufactured'' locomotive. In § 229.5, the definition of ''remanufactured'' locomotive specifies that in order to be classified as ''remanufactured'' a locomotive must be rebuilt or refurbished from a previously used or refurbished underframe (deck), containing *fewer* than 25% previously used components.

FRA clearly was concerned about this issue and sought comment on it in the NPRM. FRA requested comment as to whether a ''remanufactured'' locomotive should be treated as a new locomotive. FRA intended the definition of ''remanufactured'' locomotive to not permit what is essentially a new locomotive to be excluded from the regulatory requirements.

ASLRRA participated in the RSAC Working Group that developed the proposed rule, which was recommended to the Administrator and became the NPRM. The ASLRRA never registered an issue or concern with the definition of ''remanufactured'' locomotive. In addition, FRA has not received any data or evidence that shows that the level of rebuilding a short line railroad would perform on a locomotive would reach the threshold of the definition of remanufactured locomotive to be impacted by this rulemaking. On the contrary, FRA believes that the rebuilding that short line railroads perform on locomotives involves less than 75% new parts. FRA, therefore, disagrees with this commenter and restates that this rulemaking should not have an impact on the type or level or rebuilding that smaller railroads would perform on a locomotive.

Based on the lack of any evidence to alter FRA's previous determination, FRA certifies that this final rule is not expected to have a significant economic impact on a substantial number of small entities.

Paperwork Reduction Act

The information collection requirements in this final rule have been submitted for approval to the Office of Management and Budget (OMB) under the Paperwork Reduction Act of 1995, 44 U.S.C. 3501 *et seq.* The sections that contain the new information collection requirements and the estimated time to fulfill each requirement are as follows:

CFR Section—49 CFR	Respondent universe	Total annual responses	Average time per response	Total annual burden hours	Total annual burden cost
229.207A—Petitions For FRA Approval of New Locomotive Crashworthiness Design Standards.	685 Railroads/4 Locomotive Manufacturers.	2 petitions	1,050 hours ..	2,100	$4,000

CFR Section—49 CFR	Respondent universe	Total annual responses	Average time per response	Total annual burden hours	Total annual burden cost
—Subsequent Years	685 Railroads/4 Locomotive Manufacturers.	1 petition	1,050 hours	1,050	2,000
229.207B—Petitions For Substantive Changes to an FRA-Approved Locomotive Crashworthiness Design Standard.	685 Railroads/4 Locomotive Manufacturers.	2 petitions	1,050 hours	2,100	254,000
229.207C—Petitions For Non-Substantive Changes to an FRA-Approved Locomotive Crashworthiness Design Standard.	685 Railroads/4 Locomotive Manufacturers.	4 petitions	400 hours	1,600	183,000
229.209—Petitions For FRA Approval of Alternative Locomotive Crashworthiness Designs.	685 Railroads/4 Locomotive Manufacturers.	1 petition	2,550 hours	2,550	2,000
229.211A—Processing of Petitions—Comment.	4 Locomotive Manufacturers/Railroad Association/Labor Organizations/Public.	10 comments	16 hours	160	6,400
229.211B—Additional Information Concerning Petitions.	4 Locomotive Manufacturers/Railroad Association/Labor Organizations/Public.	4 hearings	24 hours	96	3,840
229.213—Locomotive Manufacturing information.	685 Railroads	700 records	6 minutes	70	2,800
229.215A—Retention of Records—Original Design.	4 Locomotive Manufact.	24 records	8 hours	192	7,680
229.215B—Retention of Records—Repair and Modifications.	685 Railroads/Locomotive Lessess	6 records	4 hours	24	960
229.215C—Inspection of Records	6 Locomotive Manufacturers/Rebuilders	10 records	2 minutes	.33	13

All estimates include the time for reviewing instructions; searching existing data sources; gathering or maintaining the needed data; and reviewing the information. For information or a copy of the paperwork package submitted to OMB, contact Robert Brogan, Information Clearance Officer, at 202–493–6292.

OMB is required to make a decision concerning the collection of information requirements contained in this final rule between 30 and 60 days after publication of this document in the **Federal Register**.

FRA is not authorized to impose a penalty on persons for violating information collection requirements which do not display a current OMB control number, if required. FRA intends to obtain current OMB control numbers for any new information collection requirements resulting from this rulemaking action prior to the effective date of this final rule. The OMB control number, when assigned, will be announced by separate notice in the **Federal Register**.

Environmental Impact

FRA has evaluated this final rule in accordance with the agency's ''Procedures for Considering Environmental Impacts'' as required by the National Environmental Policy Act (42 U.S.C. 4321 *et seq.*), and related statutes and directives. The agency has determined that the final regulation would not have a significant impact on the human or natural environment and is categorically excluded from detailed environmental review pursuant to section 4(c)(20) of FRA's Procedures. Neither an environmental assessment or an environmental impact statement is required in this instance. The agency's review has confirmed the applicability of the categorical exclusion to this final regulation and the conclusion that the final rule would not, if implemented, have a significant environmental impact.

Federalism Implications

FRA has analyzed this final rule in accordance with the principles and criteria contained in Executive Order 13132, issued on August 4, 1999, which directs Federal agencies to exercise great care in establishing policies that have federalism implications. *See* 64 FR 43255. This final rule will not have a substantial effect on the States, on the relationship between the national government and the States, or on the distribution of power and responsibilities among various levels of government. This final rule will not have federalism implications that impose any direct compliance costs on State and local governments.

FRA notes that the RSAC, which reached a consensus on recommending this final rule to FRA, has as permanent members two organizations representing State and local interests: the American Association of State Highway and Transportation Officials (AASHTO) and the Association of State Rail Safety Managers (ASRSM). Both of these State organizations concurred with the RSAC recommendation endorsing this final rule. The RSAC regularly provides recommendations to the FRA Administrator for solutions to regulatory issues that reflect significant input from its State members. To date, FRA has received no indication of concerns about the federalism implications of this rulemaking from these representatives or of any other representatives of State government. Consequently, FRA concludes that this final rule has no federalism implications, other than the preemption of State laws covering the subject matter of this final rule, which occurs by operation of law under 49 U.S.C. 20106 whenever FRA issues a rule or order.

Compliance With the Unfunded Mandates Reform Act of 1995

Pursuant to the Unfunded Mandates Reform Act of 1995 (Pub. L. 104–4) each Federal agency ''shall, unless otherwise prohibited by law, assess the effects of Federal Regulatory actions on State, local, and tribal governments, and the private sector (other than to the extent that such regulations incorporate requirements specifically set forth in law).'' Sec. 201. Section 202 of the Act further requires that ''before promulgating any final rule for which a general notice of proposed rulemaking was published, the agency shall prepare a written statement'' detailing the effect on State, local and tribal governments and the private sector. The final rule issued today does not include any mandates which will result in the expenditure, in the aggregate, of $128,100,000 or more in any one year,

and thus preparation of a statement is not required.

List of Subjects

49 CFR Part 229

Incorporation by reference, Locomotives, Railroad safety, Transportation.

49 CFR Part 238

Passenger equipment, Railroad safety, Transportation.

The Final Rule

■ In consideration of the foregoing, FRA is amending parts 229 and 238 of chapter II, subtitle B of title 49, Code of Federal Regulations, as follows:

PART 229—[AMENDED]

■ 1. The authority citation for part 229 continues to read as follows:

Authority: 49 U.S.C. 20102–20103, 20107, 20133, 20137–20138, 20143, 20701–20703, 21301–21302, 21304; 49 CFR 1.49(c), (m).

■ 2. Amend § 229.5 by revising the definition of ''remanufactured locomotive'' and adding in alphabetical order additional definitions to read as follows:

§ 229.5 Definitions.

* * * * *

AAR means the Association of American Railroads.

Anti-climbers means the parts at the ends of adjoining rail vehicles in a train that are designed to engage when subjected to large buff loads to prevent the override of one vehicle by another.

Associate Administrator for Safety means the Associate Administrator for Safety, Federal Railroad Administration, or that person's delegate as designated in writing.

* * * * *

Build date means the date on which the completed locomotive is shipped by the manufacturer or remanufacturer to the customer, or if the railroad manufactures or remanufactures the locomotive itself, the date on which the locomotive is released from the manufacture or remanufacture facility.

* * * * *

Collision posts means structural members of the end structures of a rail vehicle that extend vertically from the underframe to which they are securely attached and that provide protection to occupied compartments from an object penetrating the vehicle during a collision.

Corner posts means structural members located at the intersection of the front or rear surface with the side surface of a rail vehicle and which extend vertically from the underframe to the roof.

* * * * *

Designated service means exclusive operation of a locomotive under the following conditions:

(1) The locomotive is not used as an independent unit or the controlling unit in a consist of locomotives except when moving for the purposes of servicing or repair within a single yard area;

(2) The locomotive is not occupied by operating or deadhead crews outside a single yard area; and

(3) The locomotive is stenciled ''Designated Service—DO NOT OCCUPY.''

Design standard means a criterion adopted by an industry or voluntary consensus standards body, which addresses the design of a locomotive with respect to its crashworthiness and crashworthiness features.

* * * * *

FRA means the Federal Railroad Administration.

Fuel tank, external means a fuel containment vessel that extends outside the car body structure of a locomotive.

Fuel tank, internal means a fuel containment vessel that does not extend outside the car body structure of a locomotive.

* * * * *

Lateral means the horizontal direction perpendicular to the direction of travel.

* * * * *

Locomotive cab means the compartment or space on board a locomotive where the control stand is located and which is normally occupied by the engineer when the locomotive is operated.

Longitudinal means in a direction parallel to the normal direction of travel.

* * * * *

Manufacture means the act of constructing a locomotive.

* * * * *

Monocoque design locomotive means a locomotive design where the shell or skin acts as a single unit with the supporting frame to resist and transmit the loads acting on the locomotive.

* * * * *

Narrow-nose locomotive means a locomotive with a short hood that spans substantially less than the full width of the locomotive.

Occupied service means the operation of a locomotive when the cab is physically occupied by a person.

* * * * *

Permanent deformation means the undergoing of a permanent change in shape of a structural member of a rail vehicle.

* * * * *

Power car means a rail vehicle that propels a Tier II passenger train or is the lead vehicle in a Tier II passenger train, or both.

* * * * *

Remanufacture means the act of constructing a remanufactured locomotive.

Remanufactured locomotive means a locomotive rebuilt or refurbished from a previously used or refurbished underframe (''deck''), containing fewer than 25% previously used components (measured by dollar value of the components). For calculation purposes, the percentage of previously used components is determined with equivalent value of new parts and is calculated using dollar values from the same year as the new parts used to remanufacture the locomotive.

Roof rail means the longitudinal structural member at the intersection of the side wall and the roof sheathing.

* * * * *

Semi-monocoque design locomotive means a locomotive design where the skin or shell acts, to some extent, as a single unit with the supporting frame to resist and transmit the loads acting on the locomotive.

Semi-permanently coupled means coupled by means of a drawbar or other coupling mechanism that requires tools to perform the uncoupling operation.

* * * * *

Short hood means the part of the locomotive above the underframe located between the cab and the nearest end of the locomotive.

Standards body means an industry and/or professional organization or association which conducts research and develops and/or issues policies, criteria, principles, and standards related to the rail industry.

* * * * *

Tier II means operating at speeds exceeding 125 mph but not exceeding 150 mph.

* * * * *

Ultimate strength means the load at which a structural member fractures or ceases to resist any load.

* * * * *

Wide-nose locomotive means a locomotive with a short hood that spans the full width of the locomotive.

■ 3. Revise the heading of subpart D of part 229 to read as follows:

Subpart D—Locomotive Crashworthiness Design Requirements

■ 4. Amend § 229.141 to add new paragraphs (a)(6) and (b)(6) to read as follows:

§ 229.141 Body structure, MU locomotives.

(a) * * *

(6) On or after November 8, 1999, paragraph (a)(1) of this section does not apply to ''passenger equipment'' as defined in § 238.5 of this chapter, unless such equipment is excluded from the requirements of §§ 238.203 through 238.219, and § 238.223 of this chapter by operation of § 238.201(a)(2) of this chapter. Paragraphs (a)(2) through (a)(4) of this section do not apply to ''passenger equipment'' as defined in § 238.5 of this chapter that is placed in service for the first time on or after September 8, 2000, unless such equipment is excluded from the requirements of §§ 238.203 through 238.219, and § 238.223 of this chapter by operation of § 238.201(a)(2) of this chapter.

(b) * * *

(6) On or after November 8, 1999, paragraph (a)(1) of this section does not apply to ''passenger equipment'' as defined in § 238.5 of this chapter, unless such equipment is excluded from the requirements of §§ 238.203 through 238.219, and § 238.223 of this chapter by operation of § 238.201(a)(2) of this chapter. Paragraphs (a)(2) through (a)(4) of this section do not apply to ''passenger equipment'' as defined in § 238.5 of this chapter that is placed in service for the first time on or after September 8, 2000, unless such equipment is excluded from the requirements of §§ 238.203 through 238.219, and § 238.223 of this chapter by operation of § 238.201(a)(2) of this chapter.

■ 5. Add new § 229.201 to Subpart D to read as follows:

§ 229.201 Purpose and scope.

(a) *Purpose.* The purpose of this subpart is to help protect locomotive cab occupants in the event that a locomotive collides with another locomotive or piece of on-track equipment, a shifted load on a freight car on an adjacent parallel track, or a highway vehicle at a highway-rail grade crossing.

(b) This subpart prescribes minimum crashworthiness standards for locomotives. It also establishes the requirements for obtaining FRA approval of: new locomotive crashworthiness design standards; changes to FRA-approved locomotive crashworthiness design standards; and alternative locomotive crashworthiness designs.

■ 6. Add new § 229.203 to Subpart D to read as follows:

§ 229.203 Applicability.

(a) Except as provided in paragraphs (b) and (c) of this section, this subpart applies to all locomotives manufactured or remanufactured on or after January 1, 2009.

(b) *Cab cars and power cars.* The requirements of this subpart do not apply to cab control cars, MU locomotives, DMU locomotives, and semi-permanently coupled power cars that are subject to the design requirements for such locomotives set forth in part 238 of this chapter.

(c) *Locomotives used in designated service.* Locomotives used in designated service are exempt from the requirements of this subpart, with the exception of § 229.233 (minimum requirements for fuel tank design), which remains applicable to such locomotives.

■ 7. Add new §§ 229.205 through 229.207 to Subpart D to read as follows:

§ 229.205 General requirements.

(a) Each wide-nose locomotive used in occupied service must meet the minimum crashworthiness performance requirements set forth in Appendix E of this part. Compliance with those performance criteria must be established by:

(1) Meeting an FRA-approved crashworthiness design standard (including AAR S–580, Locomotive Crashworthiness Requirements). The Director of the Federal Register approves incorporation by reference of the AAR S–580 (revised July 2005), ''Locomotive Crashworthiness Requirements,'' in this section in accordance with 5 U.S.C. 552(a) and 1 CFR part 51. You may obtain a copy of the incorporated standard from the Association of American Railroads, 50 F Street NW, Washington, DC 20001. You may inspect a copy of the incorporated standard at the Federal Railroad Administration, Docket Clerk, 1120 Vermont Ave., NW Suite 7000, Washington, DC 20590 or at the National Archives and Records Administration (NARA). For information on the availability of this material at NARA, call 202–741–6030, or go to *http://www.archives.gov/federal_register/code_of_federal_regulations/ibr_locations.html;*

(2) Meeting new design standards and changes to existing design standards approved by FRA pursuant to § 229.207; or

(3) Meeting an alternative crashworthiness design approved by FRA pursuant to § 229.209.

(b) A monocoque or semi-monocoque design locomotive must be designed in accordance with the provisions of AAR S–580, applicable to those types of locomotives, in accordance with §§ 238.405(a), 238.409 and 238.411 of this chapter, or in accordance with a standard or design approved by FRA as providing at least equivalent safety.

(c) A narrow-nose locomotive must be designed in accordance with the provisions of AAR S–580, applicable to that type of locomotive (notwithstanding any limitation of scope contained in that standard) or in accordance with a standard or design approved by FRA as providing at least equivalent safety.

§ 229.206 Design requirements.

Each locomotive used in occupied service must meet the minimum anti-climber, emergency egress, emergency interior lighting, and interior configuration design requirements set forth in AAR S–580 (incorporated by reference, see § 229.205).

§ 229.207 New locomotive crashworthiness design standards and changes to existing FRA-approved locomotive crashworthiness design standards.

(a) *General.* The following procedures govern consideration and action upon requests for FRA approval of new locomotive crashworthiness design standards and changes to existing FRA-approved locomotive crashworthiness design standards, including AAR S–580 (incorporated by reference, see § 229.205). Only a standards body which has adopted an FRA-approved locomotive crashworthiness design standard may initiate these procedures for FRA approval of changes to the standard.

(b) *Petitions for FRA approval of new locomotive crashworthiness design standards.* Each petition for FRA approval of a locomotive crashworthiness design standard must be titled ''Petition for FRA Approval of a New Locomotive Crashworthiness Design Standard,'' must be submitted to the Associate Administrator for Safety, Federal Railroad Administration, 1120 Vermont Ave., NW., Mail Stop 25, Washington, DC 20590, and must contain the following:

(1) The name, title, address, telephone number and e-mail address of the primary person to be contacted with regard to review of the petition;

(2) The proposed locomotive design standard, in detail;

(3) The intended type of service for locomotives designed under the proposed standard; and

(4) Appropriate data and analysis showing how the proposed design standard either satisfies the requirements of § 229.205 for the type of locomotive design or provides at least an equivalent level of safety. Types of data and analysis to be considered are described in § 229.211(c)(1).

(c) *Petitions for FRA approval of substantive changes to an FRA-approved locomotive crashworthiness design standard.* Each petition for approval of a substantive change to an FRA-approved locomotive crashworthiness design standard must be titled ''Petition for FRA Approval of Changes to a Locomotive Crashworthiness Design Standard,'' must be submitted to the Associate Administrator for Safety, Federal Railroad Administration, 1120 Vermont Ave., NW., Mail Stop 25, Washington, DC 20590, and must contain the following:

(1) The name, title, address, telephone number and e-mail address of the primary person to be contacted with regard to review of the petition;

(2) The proposed change, in detail;

(3) The intended type of service for locomotives built with the proposed change; and

(4) Appropriate data and analysis showing how the resulting standard either satisfies the requirements for the type of locomotive set forth in § 229.205 or provides at least an equivalent level of safety. Types of data and analysis to be considered are described in § 229.211(c)(1).

(d) *Petitions for FRA approval of non-substantive changes to the existing FRA-approved crashworthiness design standards.* (1) Each petition for approval of a non-substantive change to an FRA-approved locomotive crashworthiness design standard must be titled ''Petition for FRA Approval of Non-substantive Changes to a Locomotive Crashworthiness Design Standard,'' must be submitted to the Associate Administrator for Safety, Federal Railroad Administration, 1120 Vermont Ave., NW, Mail Stop 25, Washington, DC 20590, and must contain the following:

(i) The name, title, address, telephone number and e-mail address of the primary person to be contacted with regard to review of the petition;

(ii) The proposed change, in detail; and

(iii) Detailed explanation of how the proposed change results in a non-substantive change to the existing FRA-approved crashworthiness design standard.

(2) If FRA determines that the proposed change is substantive, FRA will process the petition in accordance with paragraph (c) of this section.

■ 8. Add new § 229.209 to Subpart D to read as follows:

§ 229.209 Alternative locomotive crashworthiness designs.

(a) *General.* The following procedures govern consideration and action upon requests for FRA approval of locomotive crashworthiness designs which are not consistent with any FRA-approved locomotive crashworthiness design standard.

(b) *Petitions for FRA approval of alternative locomotive crashworthiness designs.* Each petition for FRA approval of an alternative locomotive crashworthiness design must be titled ''Petition for FRA Approval of Alternative Locomotive Crashworthiness Design,'' must be submitted to the Associate Administrator for Safety, Federal Railroad Administration, 1120 Vermont Ave., NW, Mail Stop 25, Washington, DC 20590, and must contain the following:

(1) The name, title, address, telephone number and e-mail address of the primary person to be contacted with regard to review of the petition;

(2) The proposed locomotive crashworthiness design, in detail;

(3) The intended type of service for locomotives built under the proposed design; and

(4) Appropriate data and analysis showing how the design either satisfies the requirements of § 229.205 for the type of locomotive or provides at least an equivalent level of safety. Types of data and analysis to be considered are described in § 229.211(c)(1).

■ 9. Add new § 229.211 to Subpart D to read as follows:

§ 229.211 Processing of petitions.

(a) *Federal Register notice.* FRA will publish in the **Federal Register** notice of receipt of each petition submitted under §§ 229.207(b), 229.207(c), or 229.209.

(b) *Comment.* Not later than 60 days from the date of publication of the notice in the **Federal Register** concerning a petition submitted under §§ 229.207(b), 229.207(c), or 229.209(b), any person may comment on the petition.

(1) Each comment must set forth specifically the basis upon which it is made, and contain a concise statement of the interest of the commenter in the proceeding.

(2) Each comment must be submitted to the U.S. Department of Transportation Central Docket Management System, Nassif Building, Room PL–401, 400 Seventh Street, SW., Washington, DC 20590, and must contain the assigned docket number which appeared in the **Federal Register** for that proceeding. The form of such submission may be in written or electronic form consistent with the standards and requirements established by the Central Docket Management System and posted on its Web site at *http://dms.dot.gov.*

(3) In the event FRA requires additional information to appropriately consider the petition, FRA will conduct a hearing on the petition in accordance with the procedures provided in § 211.25 of this chapter.

(c) *Disposition of petitions.* (1) In order to determine compliance with the performance criteria in Appendix E of this part, FRA will consider proper documentation of competent engineering analysis, or practical demonstrations, or both which may include validated computer modeling, structural crush analysis, component testing, full scale crash testing in a controlled environment, or any combination of the foregoing, together with evidence of effective peer review.

(2) If FRA finds that the petition complies with the requirements of this subpart and that the proposed change or new design standard satisfies the requirements of § 229.205 for the type of locomotive, the petition will be granted, normally within 90 days of its receipt. If the petition is neither granted nor denied within 90 days, the petition remains pending for decision. FRA may attach special conditions to the granting of the petition. Following the granting of a petition, FRA may reopen consideration of the petition for cause stated. Any decision granting or denying a petition is placed in the public docket for the petition.

(3) If FRA finds that the petition does not comply with the requirements of this subpart, or that the proposed change or new design standard does not satisfy the performance criteria contained in Appendix E of this part (where applicable), the petition will be denied, normally within 90 days of its receipt. If the petition is neither granted nor denied within 90 days, the petition remains pending for decision. FRA may re-open a denial of a petition for cause stated.

(4) When FRA grants or denies a petition, or reopens consideration of the petition, written notice will be sent to the petitioner and other interested parties and a copy of the notice will be

placed in the public docket of this proceeding.

■ 10. Add new § 229.213 to Subpart D to read as follows:

§ 229.213 Locomotive manufacturing information.

(a) Each railroad operating a locomotive subject to the requirements of this subpart must retain the following information:

(1) The date upon which the locomotive was manufactured or remanufactured;

(2) The name of the manufacturer or remanufacturer of the locomotive; and

(3) The design specification to which the locomotive was manufactured or remanufactured.

(b) The information required in paragraph (a) of this section must be located permanently in the locomotive cab or be provided within two business days upon request of FRA or an FRA-certified State inspector.

■ 11. Add new § 229.215 to Subpart D to read as follows:

§ 229.215 Retention and inspection of designs.

(a) *Retention of records—original designs.* Each manufacturer or remanufacturer of a locomotive subject to this subpart shall retain all records of the original locomotive designs, including supporting calculations and drawings, pertaining to crashworthiness features required by this subpart. These records must be retained for the lesser period of:

(1) The life of such locomotive, except that records for a locomotive destroyed in a rail equipment accident/incident shall be retained for at least 12 months following the accident/incident; or

(2) Twenty years after the date of manufacture or, if remanufactured, twenty years after the date of remanufacture.

(b) *Retention of records—repairs and modifications.* Each owner or lessee of a locomotive subject to this subpart shall retain all records of repair or modification to crashworthiness features required by this subpart. These records must be retained for the lesser period of:

(1) The life of such locomotive, except that records for a locomotive destroyed in a rail equipment accident/incident shall be retained for at least 12 months following the accident/incident, or

(2) Twenty years after the date on which the repair or modification was performed.

(c) *Inspection of records.* Each custodian of records referred to in paragraphs (a) and (b) shall, upon request by FRA or an FRA-certified State inspector, make available for inspection and duplication within 7 days, any records referred to in paragraphs (a) and (b) of this section.

(d) *Third party storage of records.* Each custodian of records referred to in paragraphs (a) and (b) of this section may delegate storage duties to a third party; however, the custodian retains all responsibility for compliance with this section.

■ 12. Add new § 229.217 to Subpart D to read as follows:

§ 229.217 Fuel tank.

(a) *External fuel tanks.* Locomotives equipped with external fuel tanks shall, at a minimum, comply with the requirements of AAR S–5506, ''Performance Requirements for Diesel Electric Locomotive Fuel Tanks'' (October 1, 2001), except for section 4.4. This paragraph does not apply to locomotives subject to the fuel tank safety requirements of § 238.223 or § 238.423 of this chapter. The Director of the Federal Register approves incorporation by reference of the AAR S–5506, ''Performance Requirements for Diesel Electric Locomotive Fuel Tanks'' (October 1, 2001) in this section in accordance with 5 U.S.C. 552(a) and 1 CFR part 51. You may obtain a copy of the incorporated standard from the Association of American Railroads, 50 F Street NW., Washington, DC 20001. You may inspect a copy of the incorporated standard at the Federal Railroad Administration, Docket Clerk, 1120 Vermont Ave., NW. Suite 7000, Washington, DC 20590 or at the National Archives and Records Administration (NARA). For more information on the availability of this material at NARA, call 202–741–6030, or go to *http://www.archives.gov/federal_register/code_of_federal_regulations/ibr_locations.html.*

(b) *Internal fuel tanks.* Locomotives equipped with internal fuel tanks shall, at a minimum, comply with the requirements of § 238.223(b) of this chapter.

■ 13. Amend Appendix B to part 229 by adding the heading for Subpart D and by adding entries for sections 229.205, 229.206, 229.213, 229.215 and 229.217 to read as follows:

Appendix B to Part 229—Schedule of Civil Penalties [1]

Section	Violation	Willful violation
* * * * * * *		
Subpart D—Locomotive Crashworthiness Design Requirements		
229.205 General requirements:		
(a)(1) Wide-nose locomotive not designed in compliance with AAR S–580–2005	$5,000	$7,500
(2) Wide-nose locomotive not designed in compliance with new approved design standard	5,000	7,500
(3) Wide-nose locomotive not designed in compliance with alternate approved design standard	5,000	7,500
(b) Monocoque or semi-monocoque locomotive not in compliance with design requirements	5,000	7,500
(c) Narrow-nose not in compliance with design requirements	5,000	7,500
229.206 Design requirements:		
Locomotive fails to meet—		
(1) Emergency egress requirements	2,500	5,000
(2) Emergency interior lighting requirements	2,500	5,000

[1] A penalty may be assessed against an individual only for a willful violation. Generally, when two or more violations of these regulations are discovered with respect to a single locomotive that is used by a railroad, the appropriate penalties set forth above are aggregated up to a maximum of $10,000 per day. However, a failure to perform, with respect to a particular locomotive, any of the inspections and tests required under subpart B of this part will be treated as a violation separate and distinct from, and in addition to, any substantive violative conditions found on that locomotive. Moreover, the Administrator reserves the right to assess a penalty of up to $27,000 for any violation where circumstances warrant. See 49 CFR part 209, appendix A. Failure to observe any condition for movement set forth in § 229.9 will deprive the railroad of the benefit of the movement-for-repair provision and make the railroad and any responsible individuals liable for penalty under the particular regulatory section(s) concerning substantive defect(s) present on the locomotive at the time of movement. Failure to comply with § 229.19 will result in a lapse of any affected waiver.

Section	Violation	Willful violation
(3) Interior configuration requirements	2,500	5,000
229.213 Locomotive manufacturing information:		
(a) Failure to retain required information	2,500	5,000
(b) Failure to produce required information	2,500	5,000
229.215 Retention and inspection of designs:		
(a) Failure to retain required design records	2,500	5,000
(b) Failure to retain required repair or modification records	2,500	5,000
(c) Failure to make records available when requested	2,500	5,000
229.217 Fuel tank:		
(a) External fuel tank	5,000	7,500
(b) Internal fuel tank	5,000	7,500

■ 14. Add Appendix E to part 229 to read as follows:

Appendix E to Part 229—Performance Criteria for Locomotive Crashworthiness

This appendix provides performance criteria for the crashworthiness evaluation of alternative locomotive designs, and design standards for wide-nosed locomotives and any for other locomotive, except monocoque/semi-monocoque design locomotives and narrow-nose design locomotives. Each of the following criteria describes a collision scenario and a given performance measure for protection provided to cab occupants, normally through structural design. Demonstration that these performance criteria have been satisfied may be accomplished through any of the methods described in § 229.205. This performance criteria is intended to prevent intrusion into the cab seating area occupied by crews. This excludes inner and outer vestibule areas.

(a) *Front end structure (collision posts).*—(1) *Objective.* The front end structure of the locomotive must withstand a frontal impact with a proxy object which is intended to simulate lading carried by a heavy highway vehicle (see figure 1).

(2) *Proxy object characteristics and orientation.* The proxy object must have the following characteristics: Cylindrical shape; 48-inch diameter; 126-inch length; 65,000 pound minimum weight; and uniform density. The longitudinal axis of the proxy object must be oriented horizontally perpendicular to the longitudinal axis of the locomotive.

(3) *Impact and result.* The front end structure of the locomotive must withstand a 30-mph impact with the proxy object resulting in no more than 24 inches of crush along the longitudinal axis of the locomotive, measured from the foremost point on the collision post, and with no more than 12 inches of intrusion into the cab. The center of impact must be 30 inches above the top of the locomotive underframe along the longitudinal centerline of the locomotive.

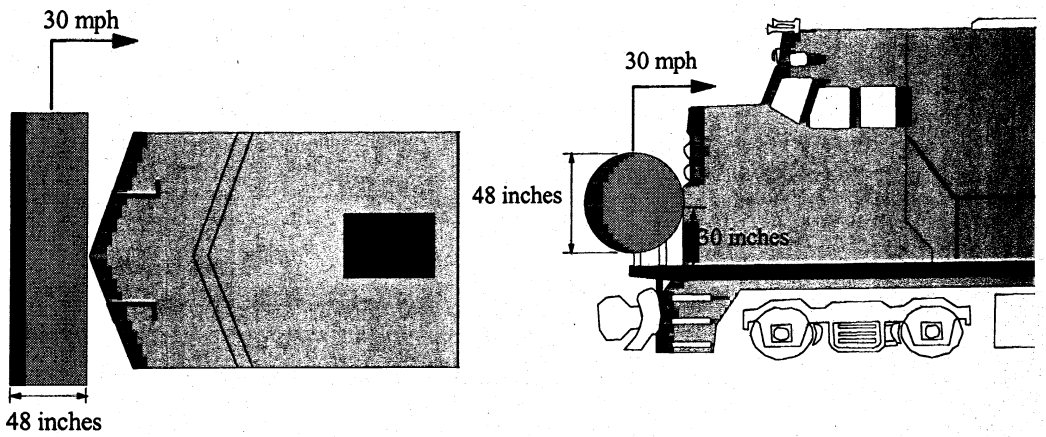

Figure 1. Schematic of Front End Structure (Collision Posts) Impact

(b) *Front end structure (short hood)*

(1) *Objective.* The front end structure of the locomotive must withstand an oblique impact with a proxy object intended to simulate an intermodal container offset from a freight car on an adjacent parallel track (see figure 2).

(2) *Proxy object characteristics and orientation.* The proxy object must have the following characteristics: Block shape; 36-inch width; 60-inch height; 108-inch length; corners having 3-inch radii corners; 65,000 pound minimum weight; and uniform density. The longitudinal axis of the proxy object must be oriented parallel to the longitudinal axis of the locomotive. At impact, the proxy object must be oriented such that there are 12 inches of lateral overlap and 30 inches from the bottom of the proxy object to the top of the locomotive underframe.

(3) *Impact and results.* The front end structure of the locomotive must withstand a 30-mph impact with the proxy object resulting in no more than 60 inches of crush along the longitudinal axis of the locomotive, measured from the first point of contact on the short hood post, and with no more than 12 inches of intrusion into the cab.

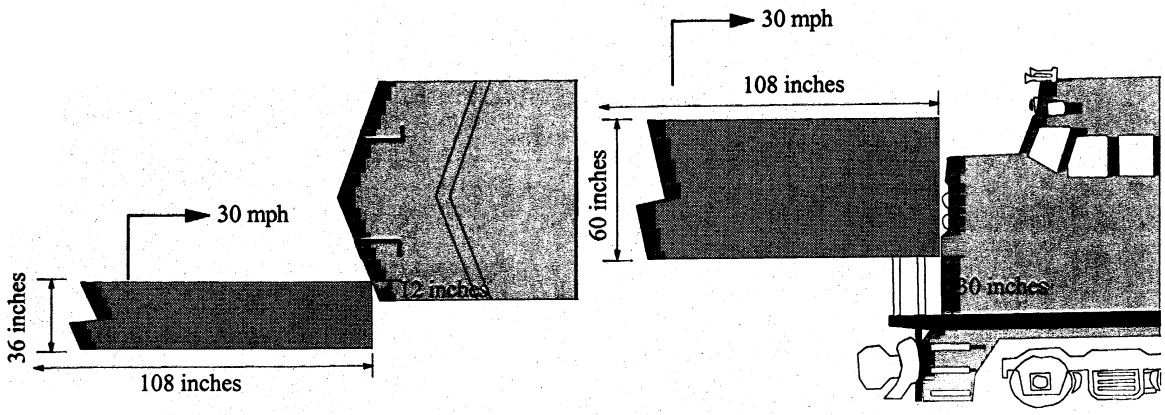

Figure 2. Schematic of Front End Structure (Short Hood) Offset Impact

PART 238—[AMENDED]

■ 15. The authority citation for part 238 continues to read as follows:

Authority: 49 U.S.C. 20103, 20107, 20133, 20141, 20302–20303, 20306, 20701–20702, 21301–21302, 21304; 28 U.S.C. 2461, note; 49 CFR 1.49.

■ 16. Amend § 238.5 by revising the definitions of ''fuel tank, external'' and ''fuel tank, internal'' to read as follows:

§ 238.5 Definitions.

* * * * *

Fuel tank, external means a fuel containment vessel that extends outside the car body structure of a locomotive.

Fuel tank, internal means a fuel containment vessel that does not extend outside the car body structure of a locomotive.

* * * * *

■ 17. Amend § 238.201 by revising paragraph (a)(2) to read as follows:

§ 238.201 Scope/alternative compliance.

(a) * * *

(2) The structural standards of this subpart (§ 238.203—static end strength; § 238.205—anti-climbing mechanism; § 238.207—link between coupling mechanism and car body; § 238.209—forward-facing end structure of locomotives; § 238.211—collision posts; § 238.213—corner posts; § 238.215—rollover strength; § 238.217—side structure; § 238.219—truck-to-car-body attachment; and § 238.223—locomotive fuel tanks) do not apply to passenger equipment if used exclusively on a rail line:

(i) With no public highway-rail grade crossings;

(ii) On which no freight operations occur at any time;

(iii) On which only passenger equipment of compatible design is utilized; and

(iv) On which trains operate at speeds not exceeding 79 mph. Any such passenger equipment remains subject to the requirements of § 229.141 of this chapter, as applicable.

* * * * *

■ 18. Amend paragraph (b) of § 238.205 by adding the following sentence at the end of the paragraph to read as follows:

§ 238.205 Anti-climbing mechanism.

* * * * *

(b) * * * Locomotives required to be constructed in accordance with subpart D of part 229 of this chapter shall have an anti-climbing mechanism in compliance with § 229.206 of this chapter, in lieu of the requirements of this paragraph.

■ 19. Amend paragraph (f) of § 238.233 by adding the following sentence at the beginning of the paragraph to read as follows:

§ 238.233 Interior fitting and surfaces.

* * * * *

(f) Locomotives required to be constructed in accordance with subpart D of part 229 of this chapter shall have cab seat attachment in compliance with § 229.206 of this chapter, in lieu of the following requirements of this paragraph. * * *

* * * * *

Issued in Washington, DC, on June 12, 2006.

Joseph H. Boardman,

Federal Railroad Administrator.

[FR Doc. 06–5667 Filed 6–27–06; 8:45 am]

BILLING CODE 4910–06–P